Spool Valves and Accessories

1500, 1600, 1650 Series

Authorized Distributor
MONILEK OILFIELD

MONILEK
OILFIELD

E: sales@monilek.com
W: www.monilekgroup.com

MIDLAND
FLOW LIMITED

Delivering precision flow control instrumentation for more than 60 years

Contents

Section	Page
Introduction	**3**
1500 Series spool valves	**4**
¼″ Pilot operated	4
¼″ Pilot operated spring-return	5
¼″ Double pilot operated	6
¼″ Pilot servo operated spring-return	7
¼″ Pilot operated latchlock manual reset	8
¼″ Pilot operated reverse latchlock manual reset	9
¼″ Mechanically operated spring-return	10
¼″ Plunger operated spring-return	11
¼″ Roller lever operated spring-return	12
¼″ Roller operated spring-return	13
¼″ Manually operated spring-return	14
¼″ Manually operated switch 2 position positive ¼″ Manually operated switch spring-return	15
¼″ Pad operated spring-return	16
¼″ Pad operated push pull with DETENT ¼″ Pad operated push pull	17
¼″ Pad operated pilot air return	18
¼″ Pad (to pull) or pilot operated spring-return	19
¼″ 3/2 Pad (to pull) spring-return with pilot latch	20
Relay Valve Range ¼″ 3/2 Pad (to pull) spring-return with pilot latch and visual indicator	21
Relay Valve Range ¼″ 3/2 Pad (to pull) spring-return with pilot and manual latch	22
Relay Valve Range ¼″ 3/2 Pad (to pull) spring-return with pilot / manual latch and visual indicator	23
¼″ 3/2 Pad operated (push-pull) with position indicator switch	24
¼″ 3/2 Fusible bulb operated	25
¼″ Key operated 2 position positive ¼″ Key operated spring-return	26
¼″ Button operated spring-return	27
¼″ Lever operated spring-return	28
¼″ Lever operated (detented)	29
¼″ Pilot solenoid operated spring-return	30
¼″ Double pilot solenoid operated	31
¼″ Pilot solenoid operated pilot air return	32
¼″ Pilot solenoid operated spring-return	33
¼″ Pilot solenoid operated latchlock manual reset	34
¼″ Pilot solenoid operated reverse latchlock manual reset	35
1600 Series spool valves	**36**
½″ Pilot operated	36
½″ Pilot operated spring-return	37
½″ Double pilot operated	38
½″ Pilot operated latchlock manual reset	39
½″ Pilot operated reverse latchlock manual reset	40
½″ Mechanically operated spring-return	41
½″ Pad operated (push pull) ½″ Pad operated (push pull) detented	42
½″ Key operated 2 position positive ½″ Key operated spring-return	43
Pad operated pilot return	44
Pad operated spring-return	45
Lever operated spring-return	46
Lever operated (detented)	47
½″ Pilot operated spring-return	48
Pilot solenoid operated spring-return	49
Double pilot solenoid operated	50
Pilot solenoid operated latchlock manual reset	51
Pilot solenoid operated reverse latchlock manual reset	52
1650 Series spool valves	**53**
¾″ & 1″ Pilot operated	53
¾″ & 1″ Pilot operated spring-return	54
¾″ & 1″ Double pilot operated	55
¾″ & 1″ Manually operated	56
¾″ & 1″ 3/2 Pad operated spring-return	57
¾″ & 1″ Pilot solenoid operated	58
¾″ & 1″ Pilot solenoid operated spring-return	59
¾″ & 1″ Double solenoid operated spring-return	60
Solenoid operators	**61**
Solenoid specifications	**61**

Introduction

As a specialist designer and manufacturer of ¼" to 1" compact spool valves we offer a full range of mechanical, air and solenoid operators, suitable for use in industrial and severe environments.

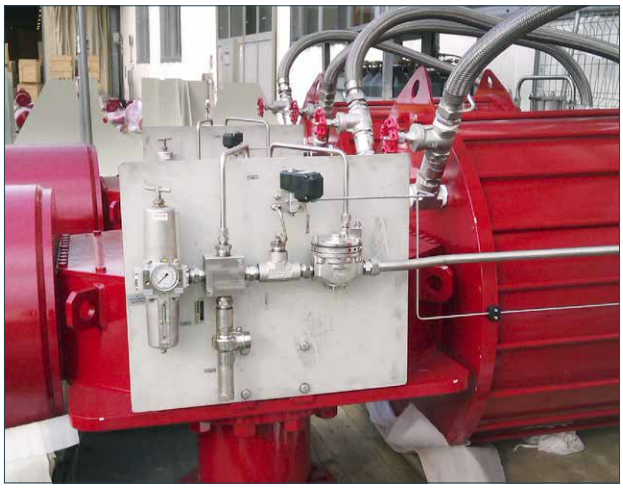

Certification Options Available

UL CSA CE Ex ATEX IECEx

A range of 3/2 and 5/2 pilot operated spool valves in stainless steel for use on gases.

Features and Benefits

- Specifically designed for severe environments
- 3/2 and 5/2 Versions
- 316L stainless steel construction
- Designed for actuator control
- NACE option available

Media & Ambient Temperature Range

- -20 to + 180 °C (-4 to +356 °F)
- Low temperature version
  -50° to +90 °C (-58 to +248 °F)

Note: When product is ordered as /ATEX ambient temperature is limited to +40 °C (104 °F) Ex II 2G c T6.

Working Pressure

- 12 bar (174 psi) maximum

Ports NPT (BSP Option Available)

- ¼″ NPT line port
- ⅛″ NPT pilot ports

Operating Media

- Gases - filtered lubricated or non-lubricated
- Air, inert gas, sweet (natural) gases
- Sour gas option available

Note: To prevent freezing of the condensate within the product, the media dew point must be at least 10 °C below the lowest ambient temperature the product will be exposed to.

Construction Materials

- Body: 316L stainless steel
- Spool: 316 stainless steel
- Spring: 316 stainless steel
- Seals: Fluoroelastomer
  (EPDM[1] on low temperature options)

[1] The use of lubrication upstream of the product is not recommended for low temperature applications.

Maximum Flow

At 6 bar, 1 bar differential:

- 3/2 valves - 1,000 l/min (35.3 SCFM)
- 5/2 valves - 1,200 l/min (42.4 SCFM)

Certification Options Available

CE Ex ATEX

3/2 Function

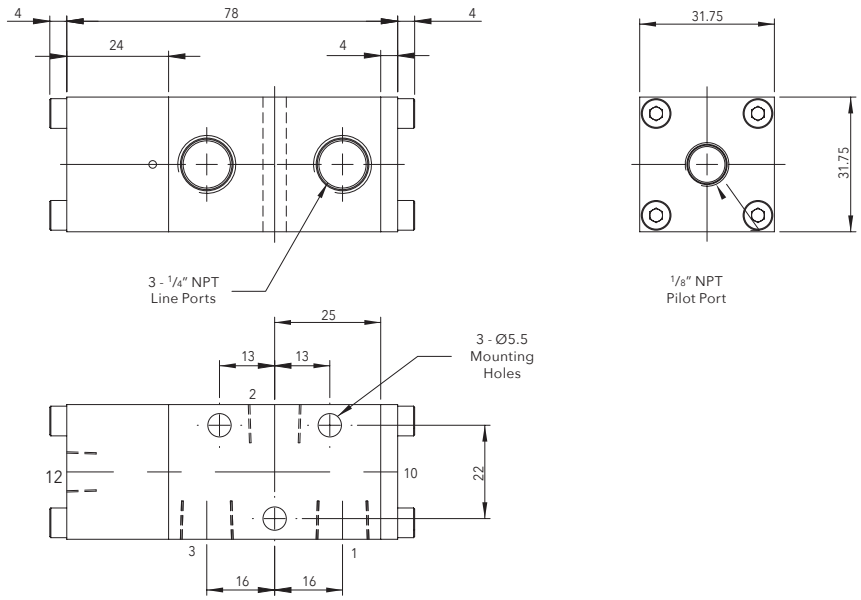

5/2 Function

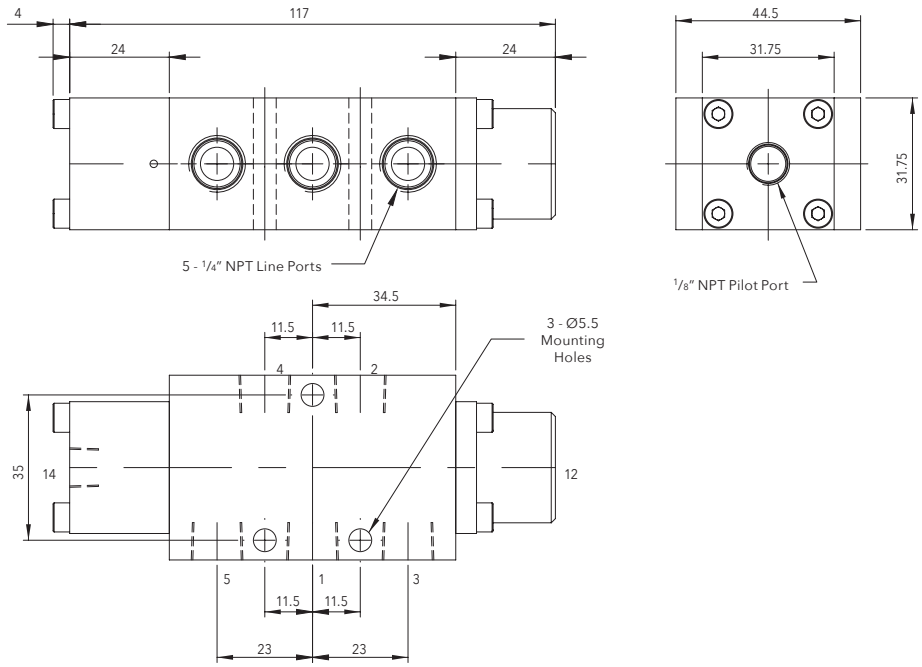

Ordering Information

Product Code	Low Temperature Version	Function	Min Pilot Pressure	Weight (kg)	CV	Symbol	Product
2326M21-VR2B	2326M21-ER2B	3/2	2.3 Bar	0.55	1.0	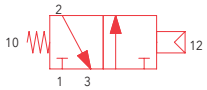	
2526M21-VR2B	2526M21-ER2B	5/2	3.5 Bar	1.0	1.2	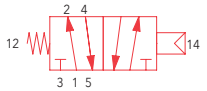	

If ATEX certification is required suffix product code with '/ATEX'

3/2 Function

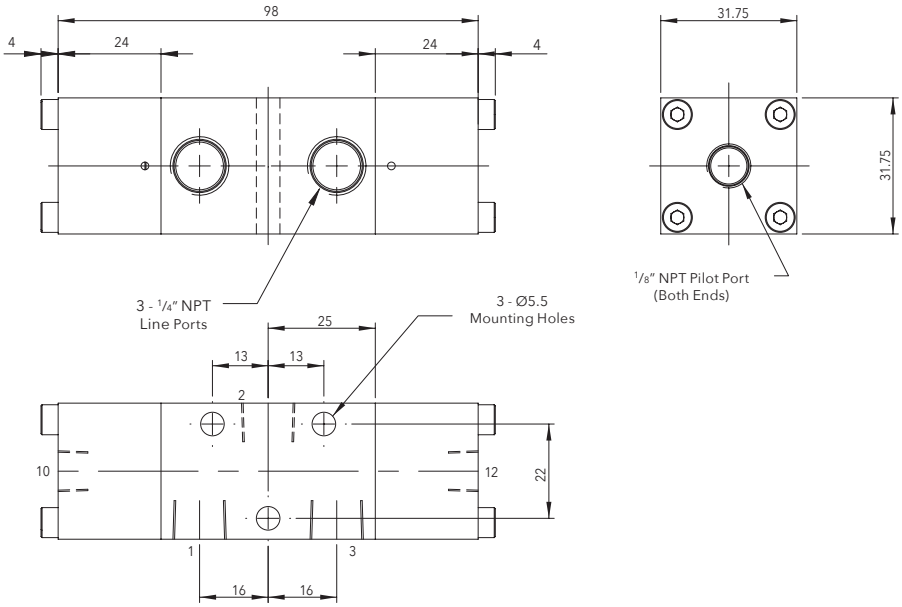

5/2 Function

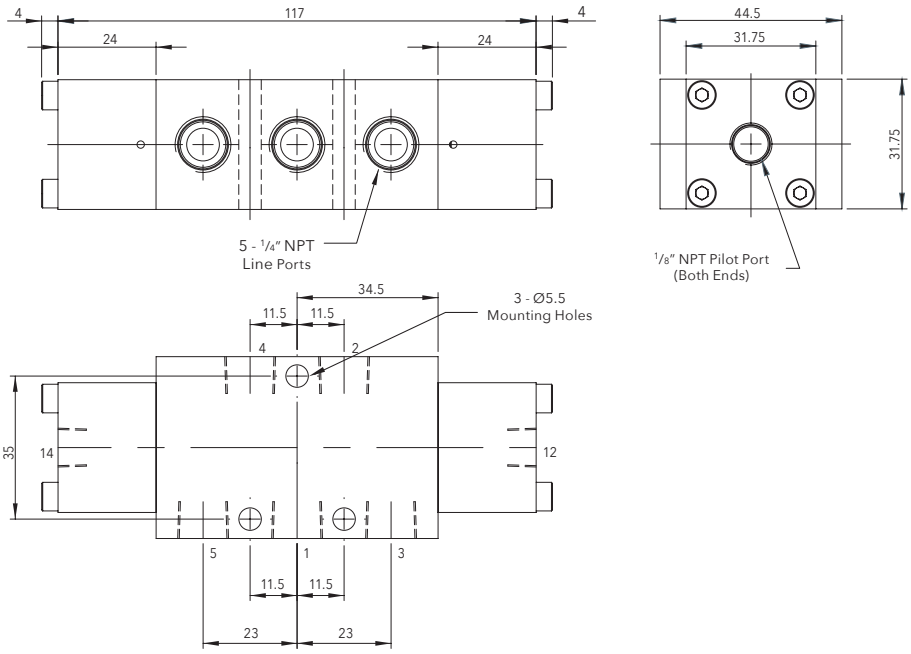

Ordering Information

Product Code	Low Temperature Version	Function	Min Pilot Pressure	Weight (kg)	CV	Symbol	Product
2326B11-VR2B	2326B11-ER2B	3/2	1.3 Bar	0.70	1.0	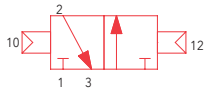	
2526B11-VR2B	2526B11-ER2B	5/2	2.3 Bar	1.0	1.2	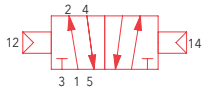	

If ATEX certification is required suffix product code with '/ATEX'

3/2 Function

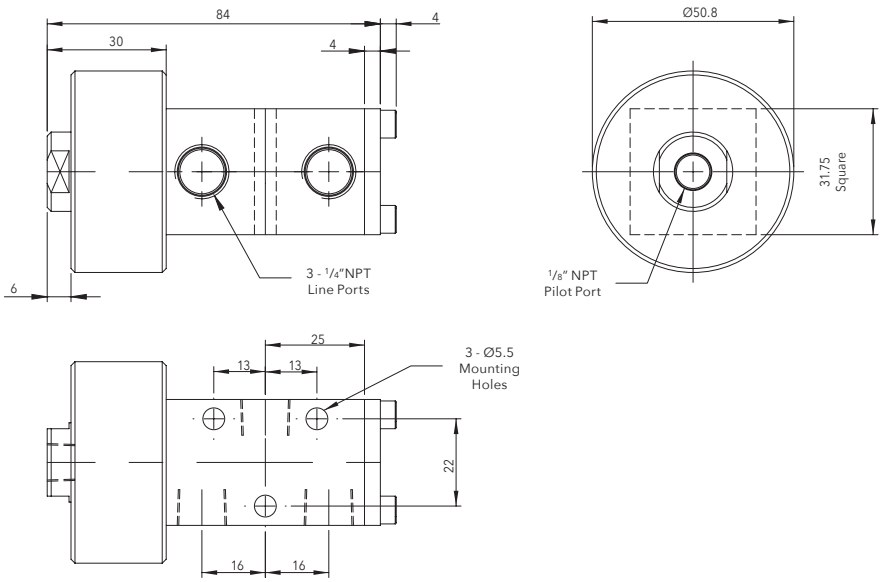

5/2 Function

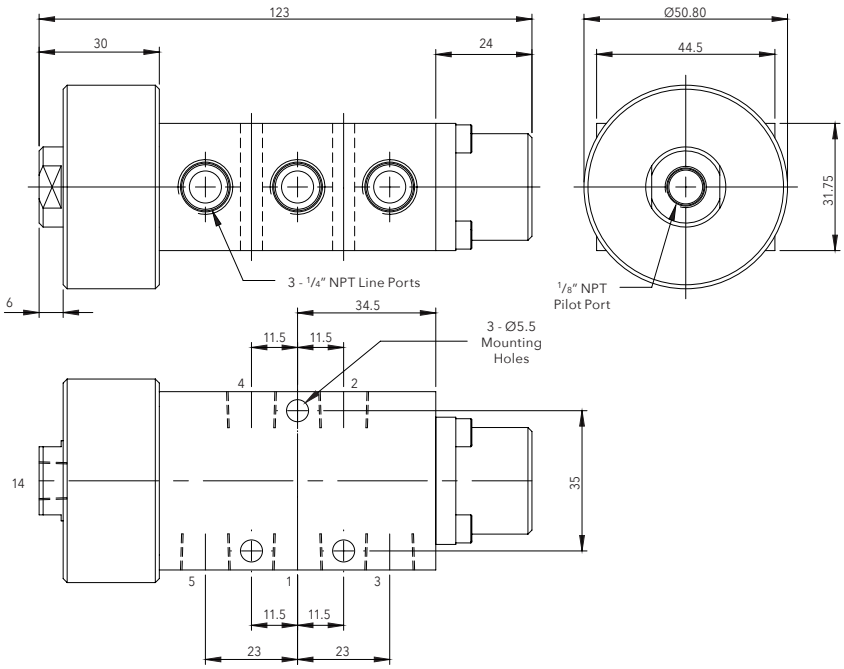

Ordering Information

Product Code	Low Temperature Version	Function	Min Pilot Pressure	Weight (kg)	CV	Symbol	Product
2326M211VR2B	2326M211ER2B	3/2	0.8 Bar	0.80	1.0	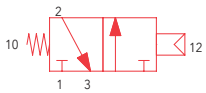	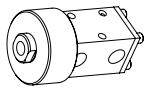
2526M211VR2B	2526M211ER2B	5/2	1.2 Bar	1.25	1.2		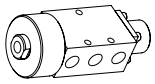

If ATEX certification is required suffix product code with '/ATEX'

3/2 Function

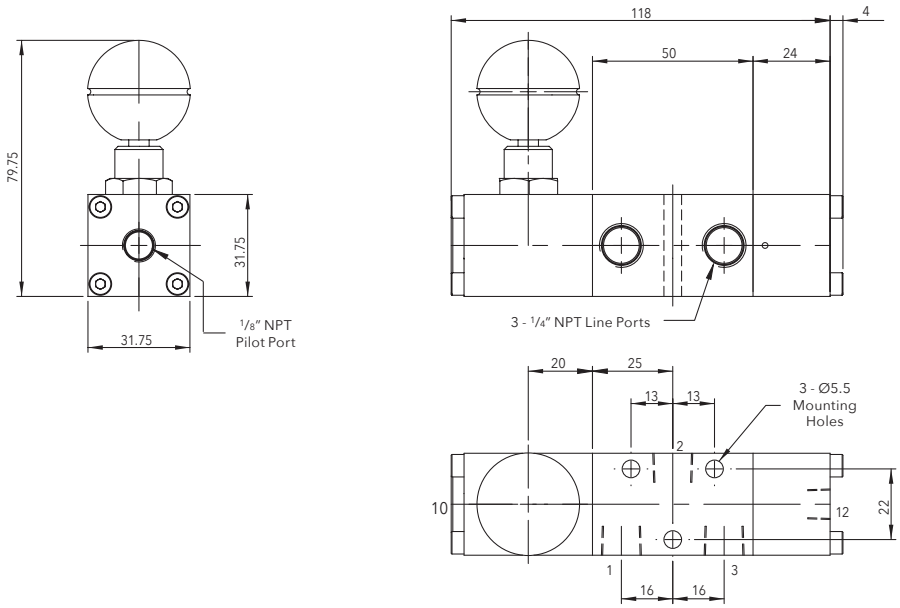

5/2 Function

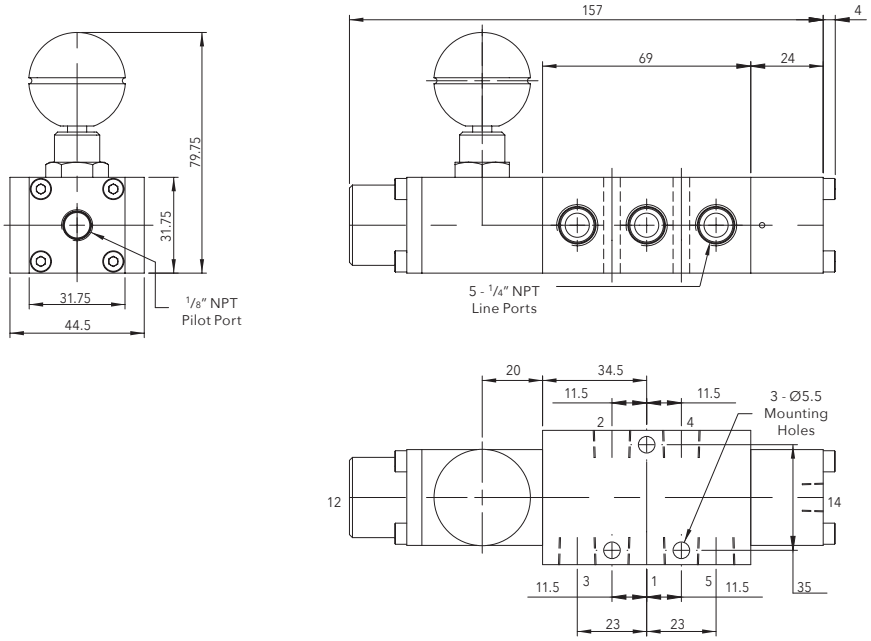

Ordering Information

Product Code	Low Temperature Version	Function	Min Pilot Pressure	Weight (kg)	CV	Symbol	Product
2326M212VR2B	2326M212ER2B	3/2	3 Bar	0.93	1.0	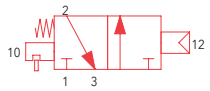	
2526M212VR2B	2526M212ER2B	5/2	5 Bar	1.38	1.2	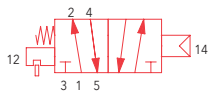	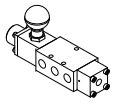

If ATEX certification is required suffix product code with '/ATEX'

3/2 Function

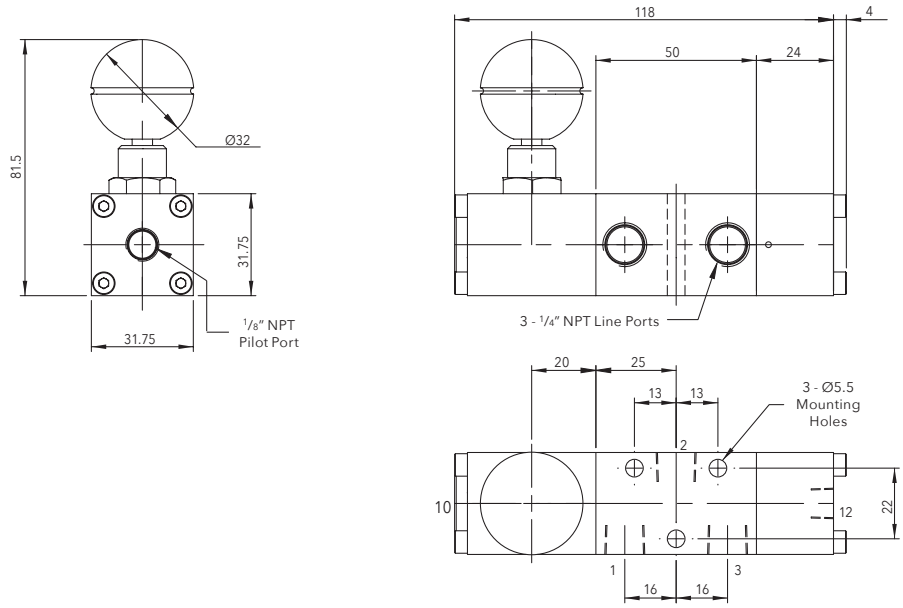

5/2 Function

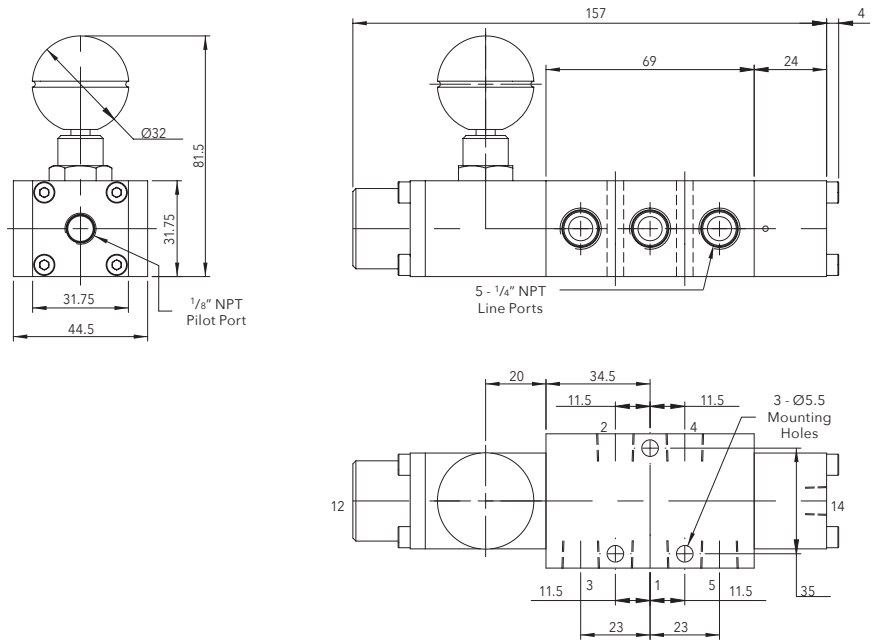

Ordering Information

Product Code	Low Temperature Version	Function	Min Pilot Pressure	Weight (kg)	CV	Symbol	Product
2326M218VR2B	2326M218ER2B	3/2	3 Bar	0.93	1.0	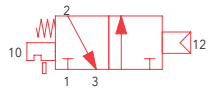	
2526M218VR2B	2526M218ER2B	5/2	5 Bar	1.38	1.2	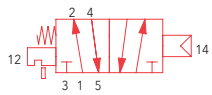	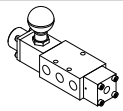

If ATEX certification is required suffix product code with '/ATEX'

A range of 3/2 and 5/2 mechanically operated spool valves in stainless steel for use on gases.

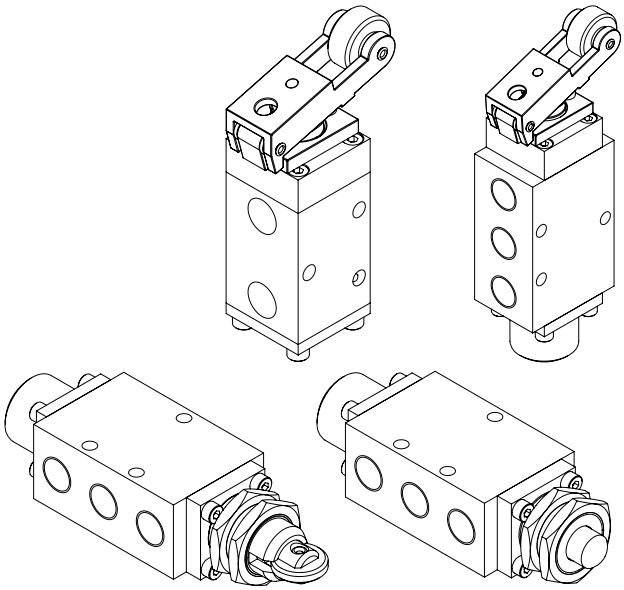

Features and Benefits

- Specifically designed for severe environments
- 3/2 and 5/2 versions
- 316L stainless steel construction
- Designed for actuator control
- NACE option available

Media & Ambient Temperature Range

- -20 to + 180 °C (-4 to +356 °F)
- Low temperature version
  -50 to +90 °C (-58 to +248 °F)

Notes: When product is ordered as /ATEX ambient temperature is limited to +40 °C (104 °F) Ex II 2G c T6.

For part numbers 2326M28 (see pg.12), Media and Ambient temperature range is -20 to +75 °C (-4 to +167 °F).

Working Pressure

- 12 bar (174 psi) maximum

Ports NPT (BSP Option Available)

- ¼" NPT line ports

Operating Media

- Gases - filtered lubricated or non-lubricated
- Air, inert gas, sweet (natural) gases
- Sour gas option available

Note: To prevent freezing of the condensate within the product, the media dew point must be at least 10 °C below the lowest ambient temperature the product will be exposed to.

Construction Materials

- Body: 316L stainless steel
- Spool: 316 stainless steel
- Spring: 316 stainless steel
- Seals: Fluoroelastomer
  (EPDM[1] on low temperature options)
- Plunger Gaiter (roller lever operated valve only): Nitrile rubber
  (Note the gaiter is not fitted to low temperature options)
- Roller (standard option): Acetal
  Roller (low temp option): 316 stainless Steel

[1] The use of lubrication upstream of the product is not recommended for low temperature applications.

Maximum Flow

At 6 bar, 1 bar differential:

- 3/2 valves - 1,000 l/min (35.3 SCFM)
- 5/2 valves - 1,200 l/min (42.4 SCFM)

Certification Options Available

CE Ex ATEX

3/2 Function

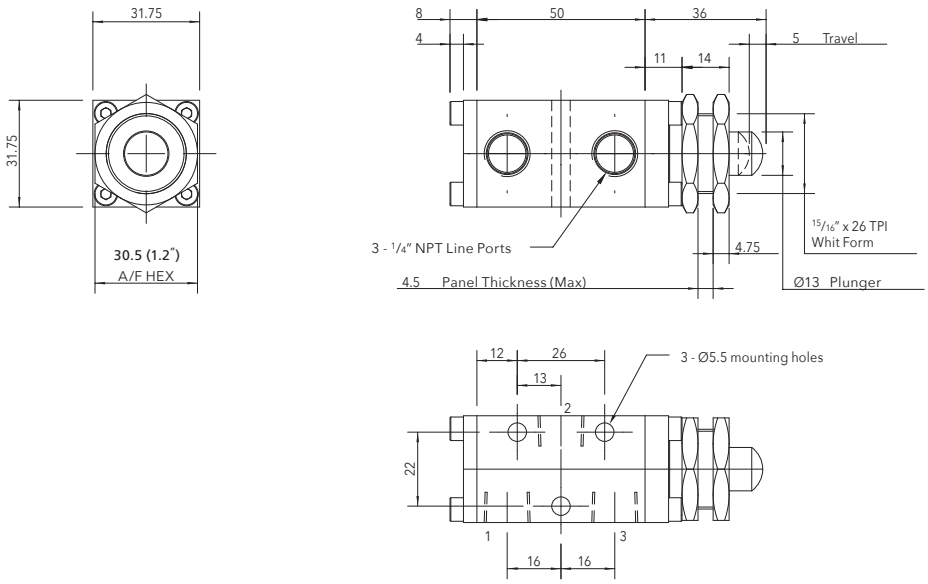

5/2 Function

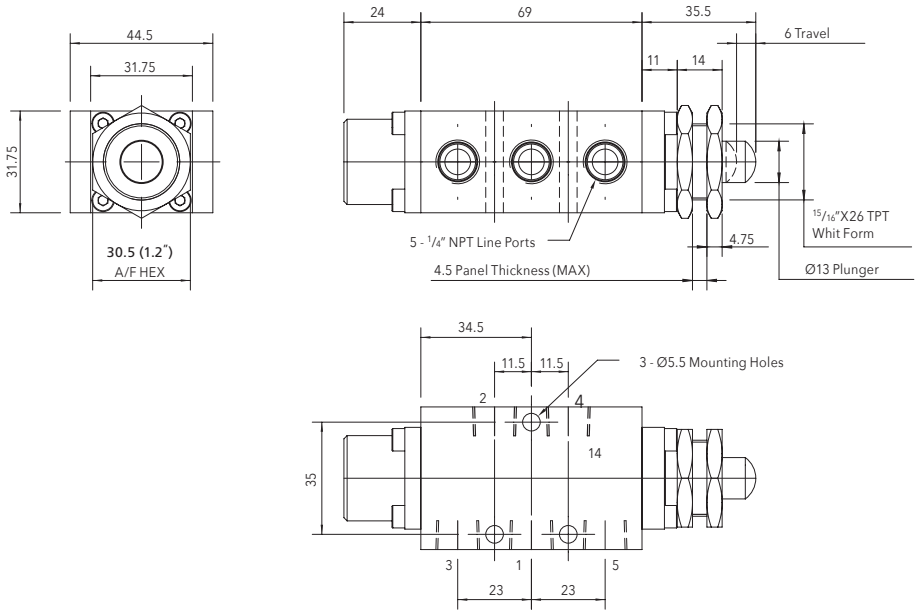

Ordering Information

Product Code	Low Temperature Version	Function	Operating Force (N)	Weight (kg)	CV	Symbol	Product
2326M26-VR2B	2326M26-ER2B	3/2	76	0.46	1.0	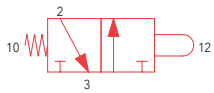	
2526M26-VR2B	2526M26-ER2B	5/2	89	1.10	1.2	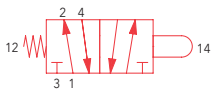	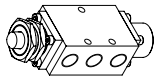

If ATEX certification is required suffix product code with '/ATEX'

3/2 Function

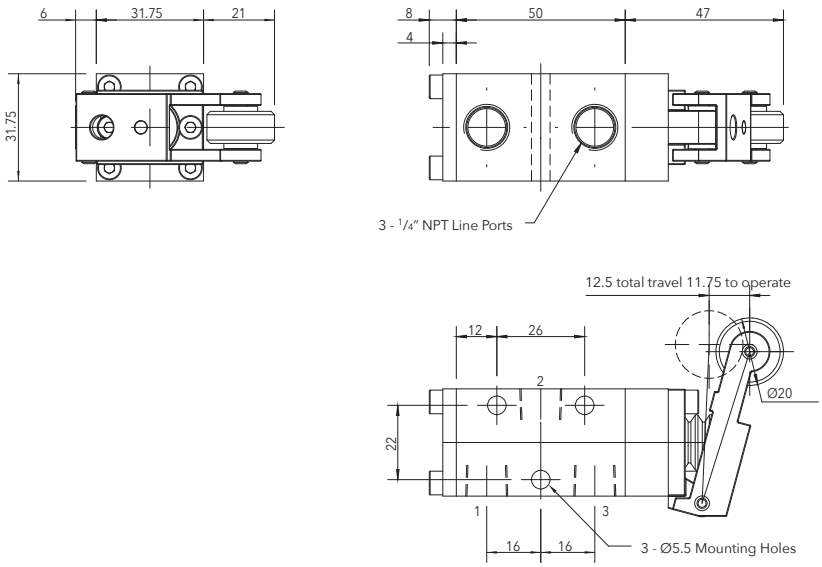

5/2 Function

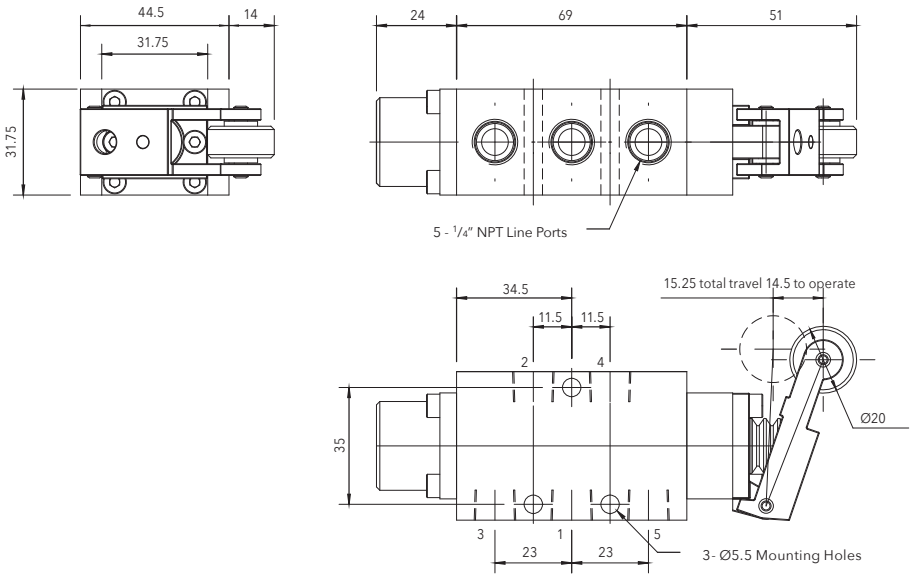

Ordering Information

Product Code	Low Temperature Version	Function	Operating Force (N)	Weight (kg)	CV	Symbol	Product
2326M28-VR2B	2326M28-ER2B	3/2	38	0.55	1.0	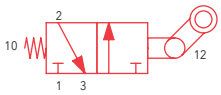	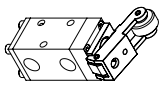
2526M28-VR2B	2526M28-ER2B	5/2	40	1.00	1.2	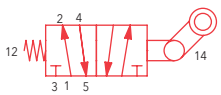	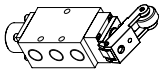

If ATEX certification is required suffix product code with '/ATEX'

3/2 Function

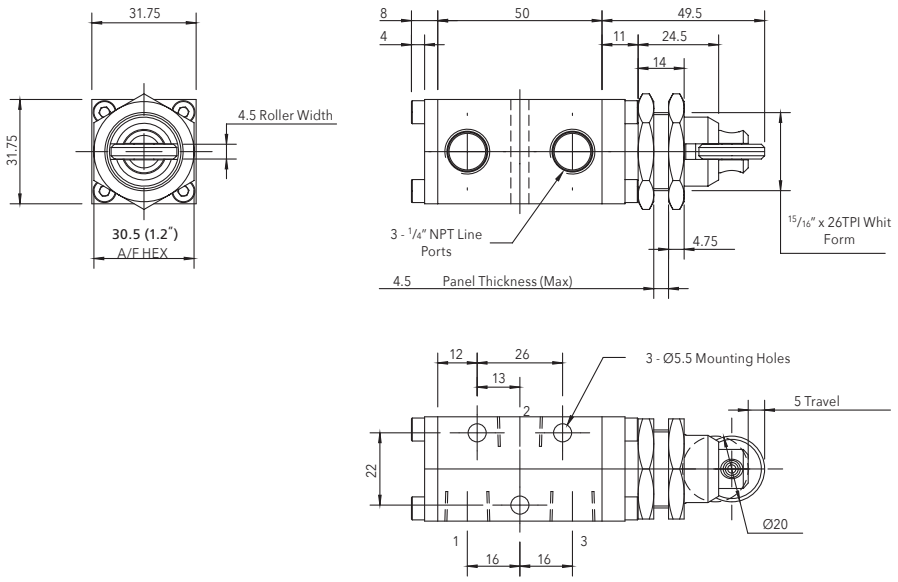

5/2 Function

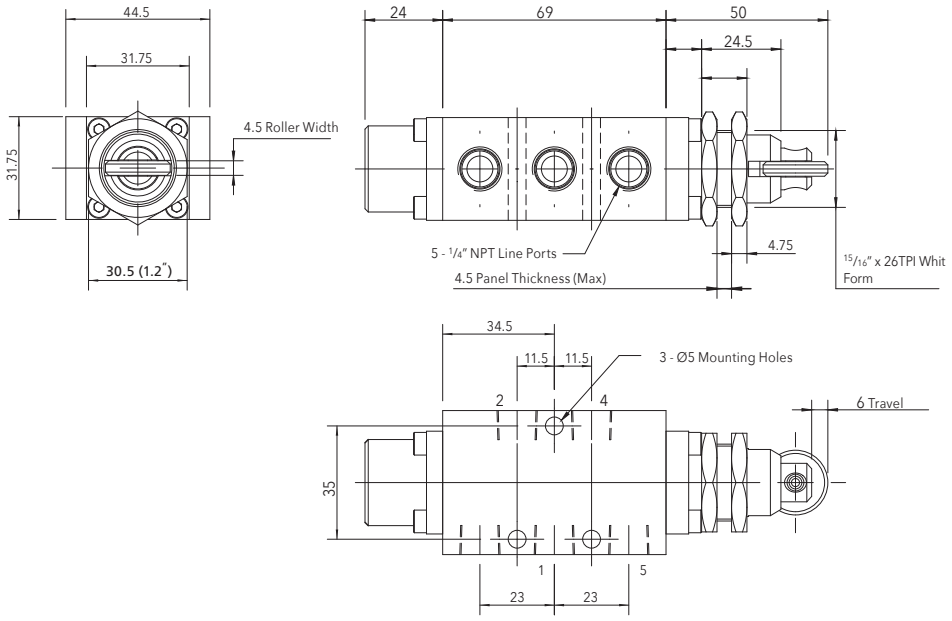

Ordering Information

Product Code	Low Temperature Version	Function	Options	Operating Force (N)	Weight (kg)	CV	Symbol	Product
2326M2C-VR2B	2326M2C-ER2B	3/2	Without lock nuts	76	0.48	1.0	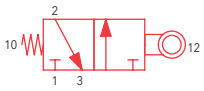	
2326M2C5VR2B	2326M2C5ER2B	3/2	With lock nuts	76	0.48	1.0		
2526M2C-VR2B	2526M2C-ER2B	5/2	Without lock nuts	89	1.12	1.2		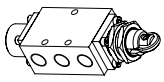
2526M2C5VR2B	2526M2C5ER2B	5/2	With lock nuts	89	1.12	1.2		

If ATEX certification is required suffix product code with '/ATEX'

A range of 3/2 and 5/2 manually operated spool valves in stainless steel for use on gases.

Features and Benefits

- Specifically designed for severe environments
- 3/2 and 5/2 versions
- 316L stainless steel construction
- Designed for actuator control
- NACE option available

Media & Ambient Temperature Range

- -20 to +180 °C (-4 to +356 °F)
- Low temperature version
  -50 to +90 °C (-58 to +248 °F)

Notes: When product is ordered as /ATEX ambient temperature is limited to +40 °C (104 °F) Ex II 2G c T6.

Excludes fusible bulb valve, please refer to separate temperature ratings on page 25.

Working Pressure

- 12 bar (174 psi) maximum

Ports NPT (BSP Option Available)

- ¼″ NPT line port
- ⅛″ NPT pilot ports

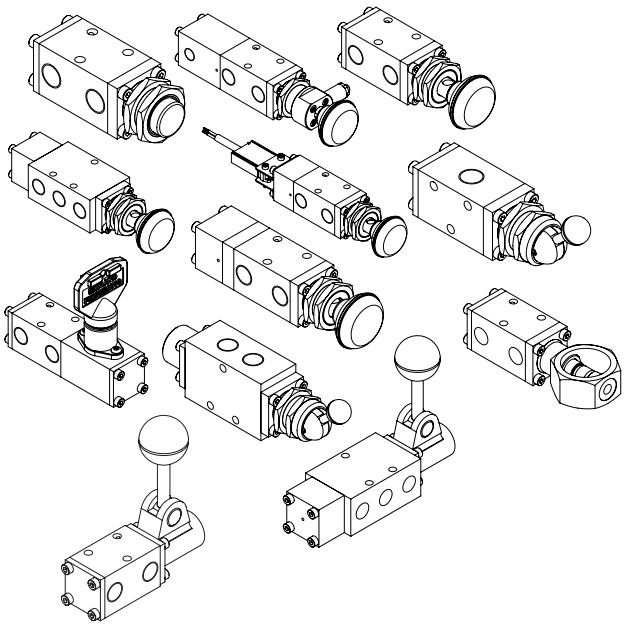

Operating Media

- Gases - filtered lubricated or non-lubricated
- Air, inert gas, sweet (natural) gases
- Sour gas option available

Note: To prevent freezing of the condensate within the product, the media dew point must be at least 10 °C below the lowest ambient temperature the product will be exposed to.

Construction Materials

- Body: 316L stainless steel
- Spool: 316 stainless steel
- Spring: 316 stainless steel
- Seals: Fluoroelastomer
  (EPDM[1] on low temperature options)

[1] The use of lubrication upstream of the product is not recommended for low temperature applications.

Maximum Flow

At 6 bar, 1 bar differential:

- 3/2 valves - 1,000 l/min (35.3 SCFM)
- 5/2 valves - 1,200 l/min (42.4 SCFM)

Certification Options Available

CE Ex ATEX

3/2 Function

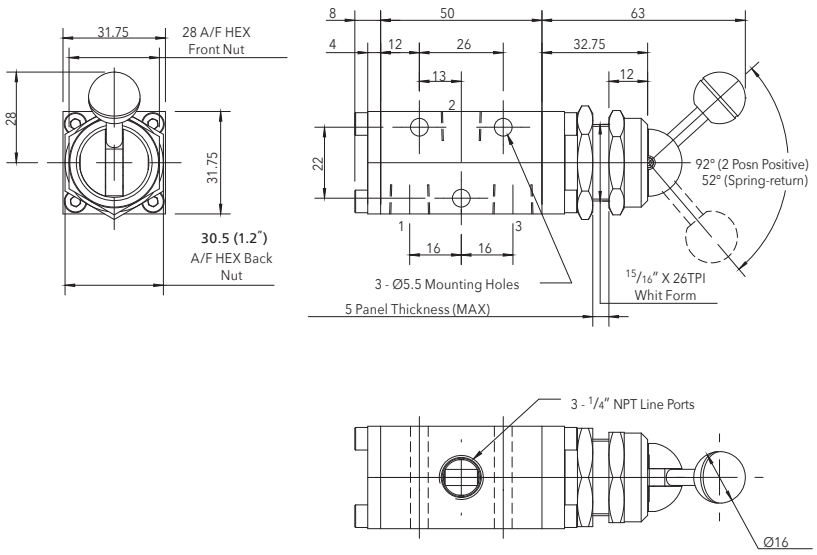

5/2 Function

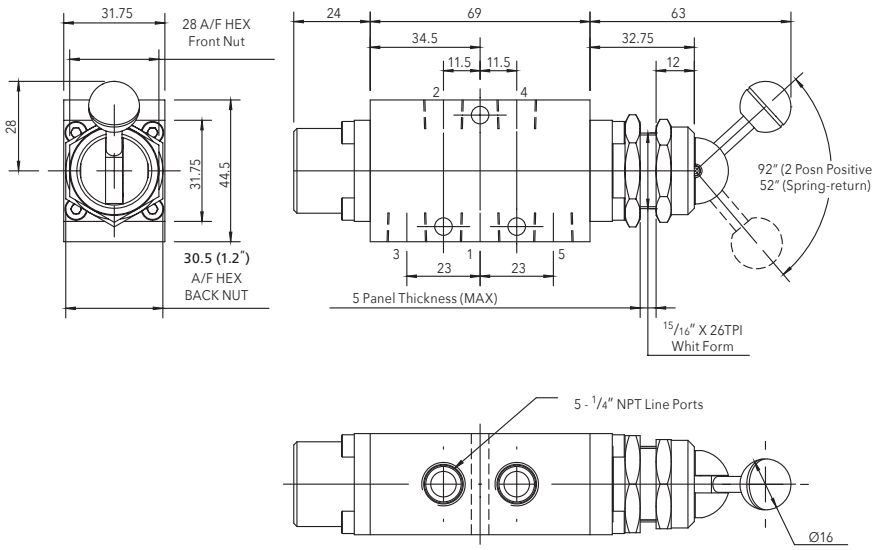

Ordering Information

Product Code	Low Temperature Version	Function	Options	Operating Force (N)	Weight (kg)	CV	Symbol	Product
2326B00-VR2B	2326B00-ER2B	3/2	3/2 manually operated switch 2 position positive detent	13	0.80	1.0	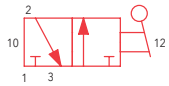	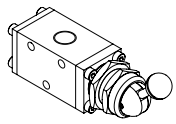
2326M20-VR2B	2326M20-ER2B	3/2	3/2 manually operated switch spring-return	13	0.80	1.0	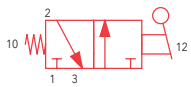	
2526B00-VR2B	2526B00-ER2B	5/2	5/2 manually operated switch 2 position positive	16	1.10	1.2	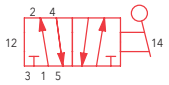	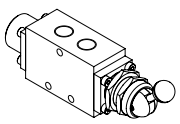
2526M20-VR2B	2526M20-ER2B	5/2	5/2 manually operated switch spring-return	16	1.10	1.2	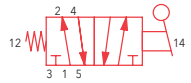	

If ATEX certification is required suffix product code with '/ATEX'

3/2 Function

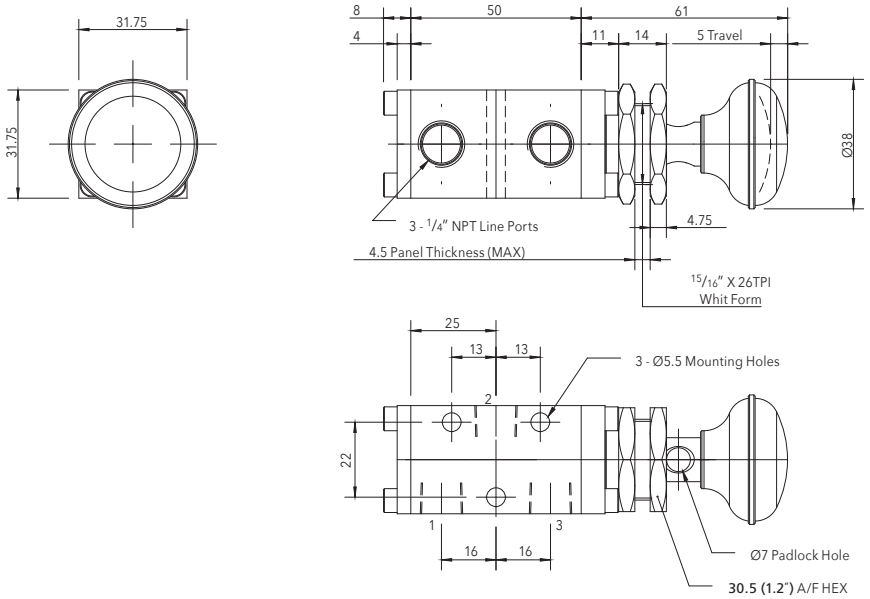

5/2 Function

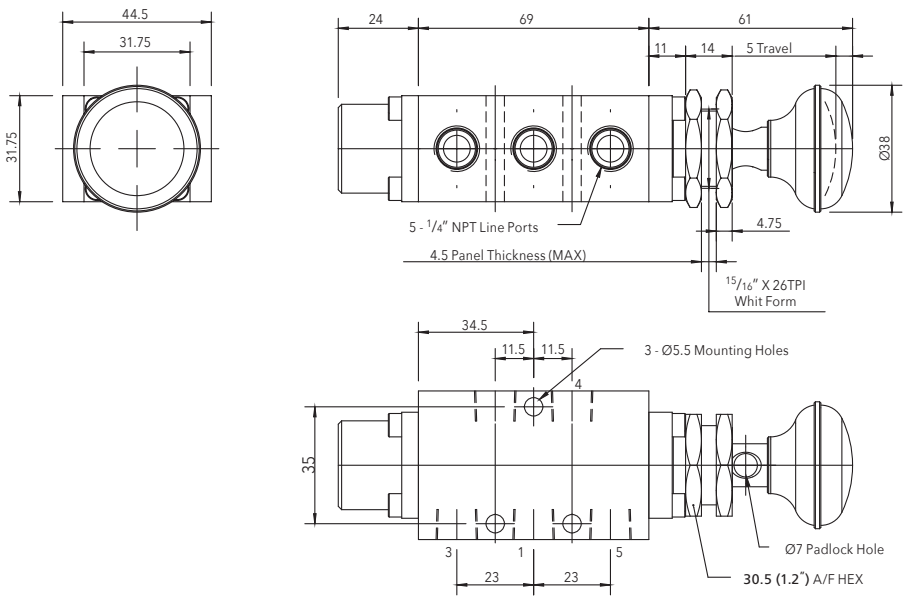

Ordering Information

Product Code	Low Temperature Version	Function	Options	Operating Force (N)	Weight (kg)	CV	Symbol	Product
2326M27-VR2B	2326M27-ER2B	3/2	Without lock nuts	76	0.50	1.0	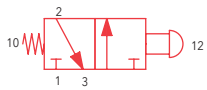	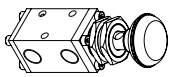
2326M275VR2B	2326M275ER2B	3/2	With lock nuts	76	0.50	1.0		
2526M27-VR2B	2526M27-ER2B	5/2	Without lock nuts	89	0.95	1.2		
2526M275VR2B	2526M275ER2B	5/2	With lock nuts	89	0.95	1.2		

If ATEX certification is required suffix product code with '/ATEX'

3/2 Function

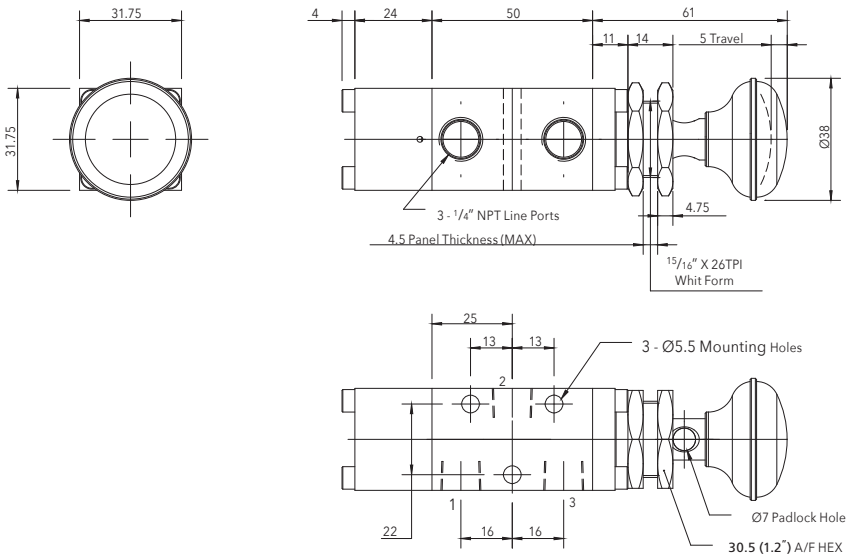

5/2 Function

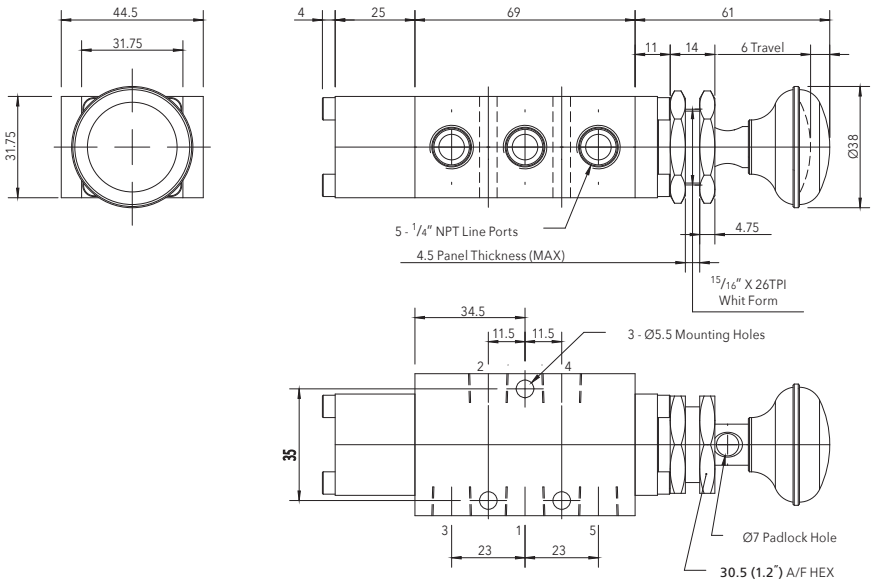

Ordering Information

Product Code	Low Temperature Version	Function	Options	Weight (kg)	CV	Symbol	Product
2326B77-VR2B	2326B77-ER2B	3/2	3/2 pad operated push pull	0.61	1.0	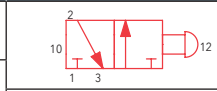	
2326B775VR2B	2326B775ER2B	3/2	3/2 pad operated push pull with lock nuts	0.63	1.0		
2326B773VR2B	2326B773ER2B	3/2	3/2 pad operated push pull with detent c/w lock nuts	0.63	1.0	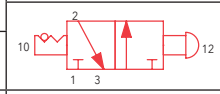	
2526B77-VR2B	2526B77-ER2B	5/2	5/2 pad operated push pull	0.93	1.2	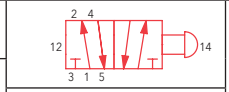	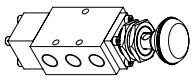
2526B775VR2B	2526B775ER2B	5/2	5/2 pad operated push pull with lock nuts	0.95	1.2		
2526B773VR2B	2526B773ER2B	5/2	5/2 pad operated push pull with detent	0.95	1.2	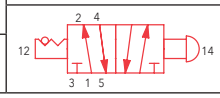	

If ATEX certification is required suffix product code with '/ATEX'

3/2 Function

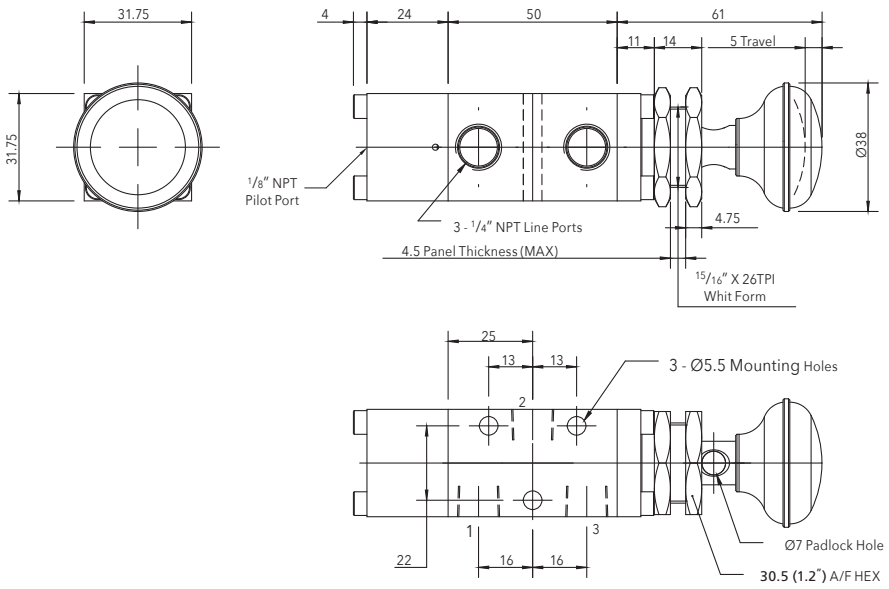

5/2 Function

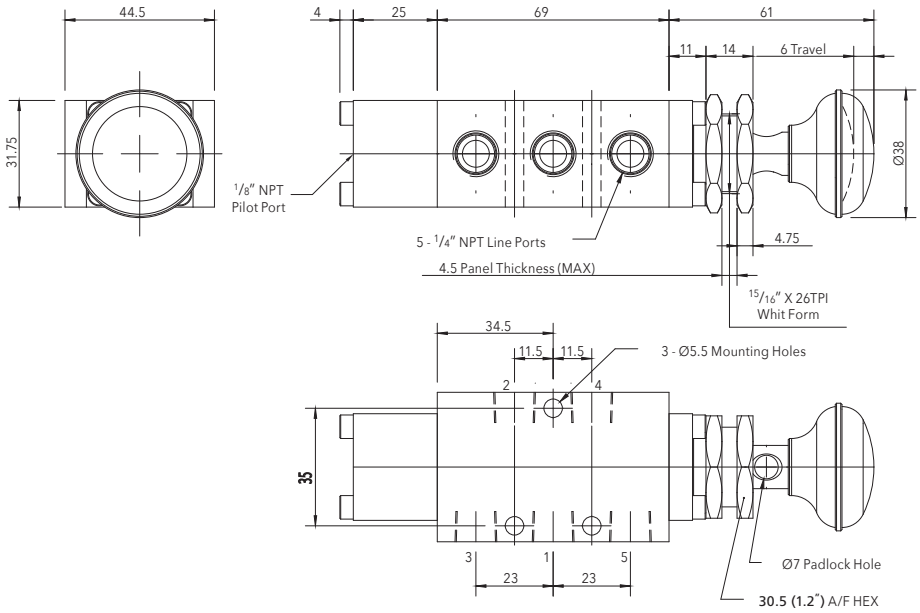

Ordering Information

Product Code	Low Temperature Version	Function	Options	Min pilot pressure	Weight (kg)	CV	Symbol	Product
2326B17-VR2B	2326B17-ER2B	3/2	Without lock nuts	1.3 Bar	0.63	1.0	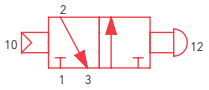	
2326B175VR2B	2326B175ER2B	3/2	With lock nuts	1.3 Bar	0.63	1.0		
2526B17-VR2B	2526B17-ER2B	5/2	Without lock nuts	2.3 Bar	0.95	1.2	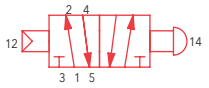	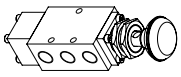
2526B175VR2B	2526B175ER2B	5/2	With lock nuts	2.3 Bar	0.95	1.2		

If ATEX certification is required suffix product code with '/ATEX'

3/2 Function

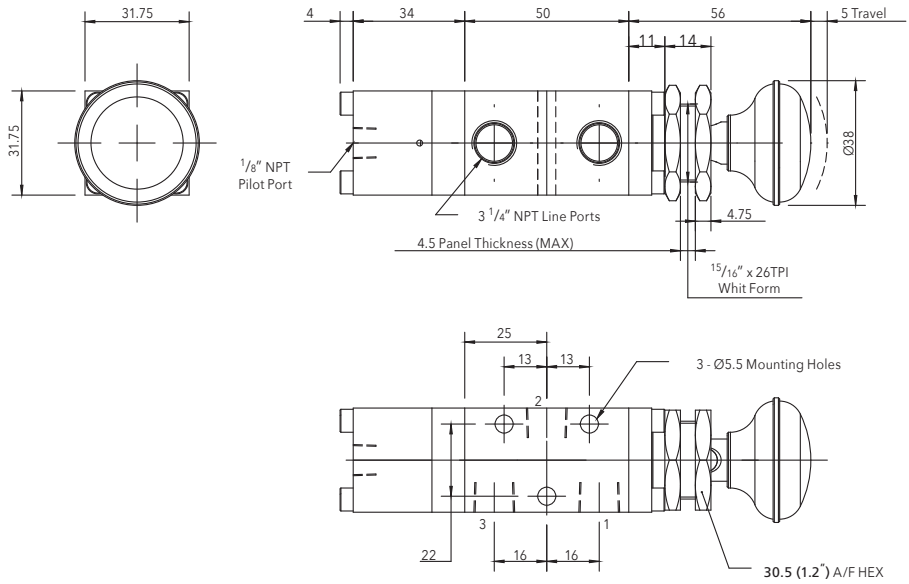

5/2 Function

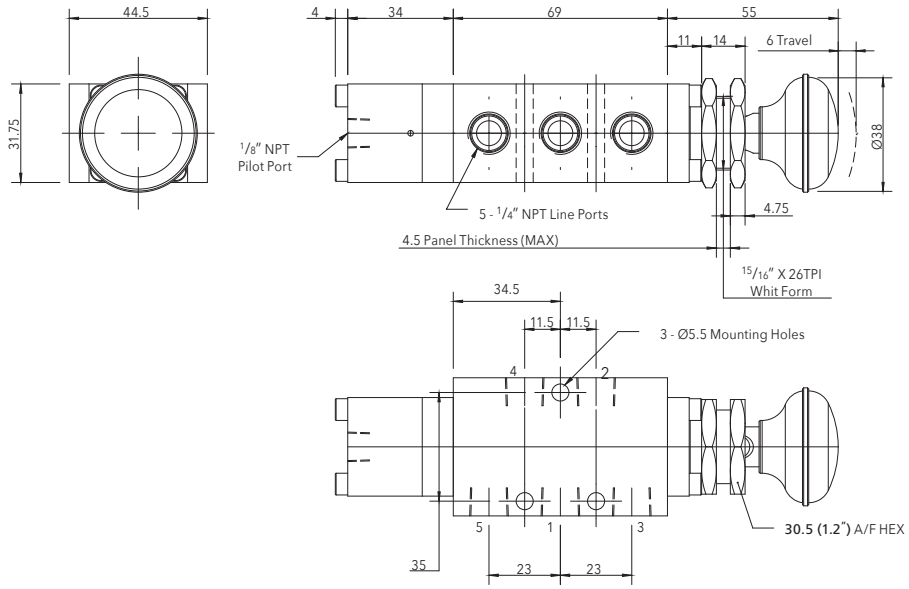

Ordering Information

Product Code	Low Temperature Version	Function	Options	Operating Force (N)	Weight (kg)	CV	Symbol	Product
2326M2F-VR2B	2326M2F-ER2B	3/2	Without lock nuts	76	0.65	1.0		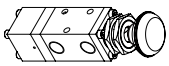
2326M2F5VR2B	2326M2F5ER2B	3/2	With lock nuts	76	0.65	1.0		
2526M2F-VR2B	2526M2F-ER2B	5/2	Without lock nuts	89	1.00	1.2		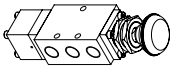
2526M2F5VR2B	2526M2F5ER2B	5/2	With lock nuts	89	1.00	1.2		

If ATEX certification is required suffix product code with '/ATEX'

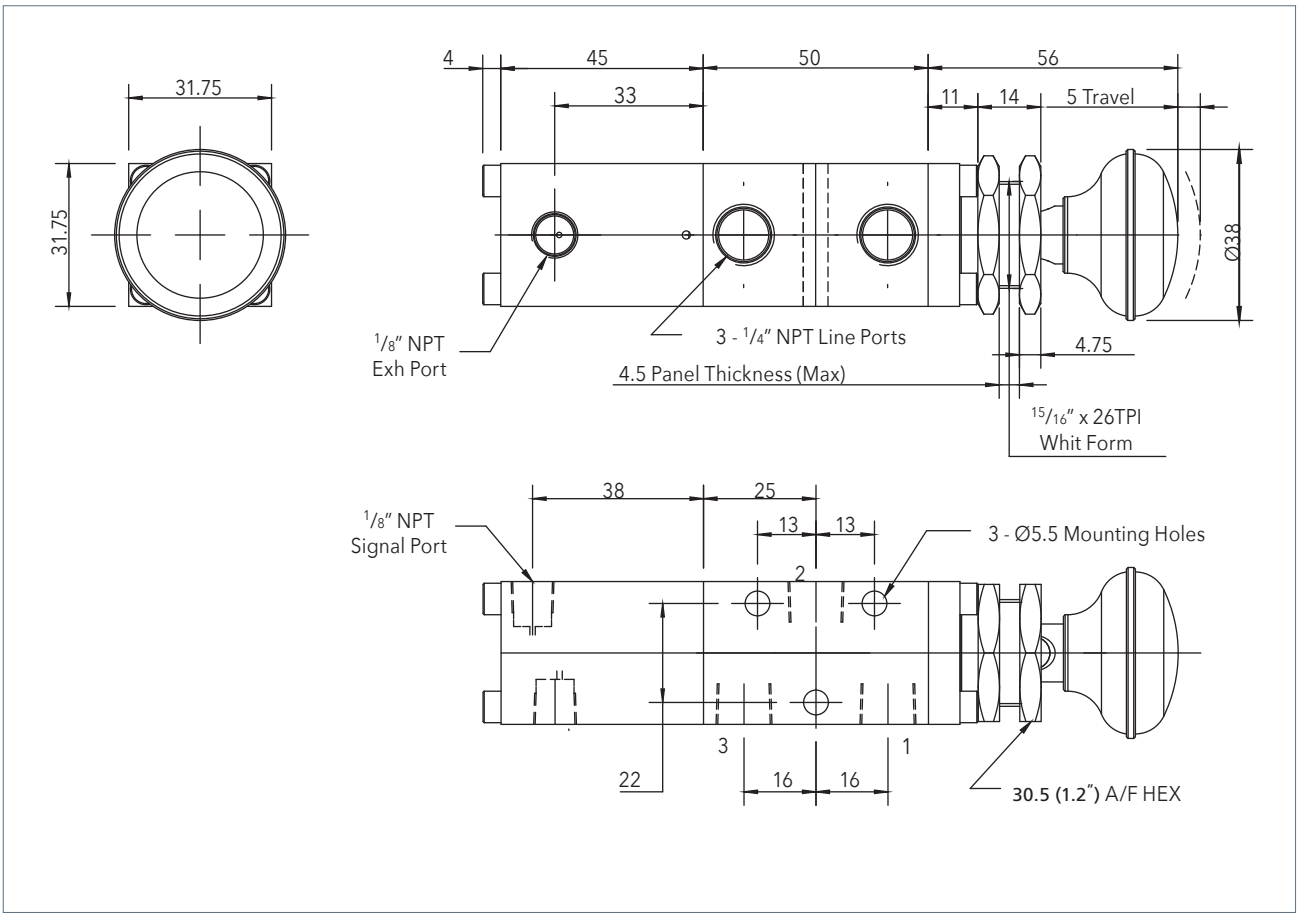

Ordering Information

Product Code	Low Temperature Version	Operating Force (N)	Weight (kg)	CV	Symbol	Product
2326M276VR2B	2326M276ER2B	76	0.75	1.0	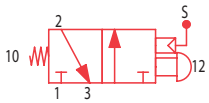	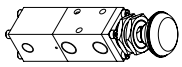

If ATEX certification is required suffix product code with '/ATEX'

Pad operated, spring-return with pilot latch

If a pilot pressure of 1.5 to 10 bar (21 to 145 psi) is present at pilot ports when the knob is pulled out, the pilot pressure will hold the valve in the operated position against the return spring. If the pilot pressure falls to 0.5 bar (7 psi) or less the valve will be reset to its unoperated position. The valve cannot be operated by pilot pressure alone, manual operation must take place first.

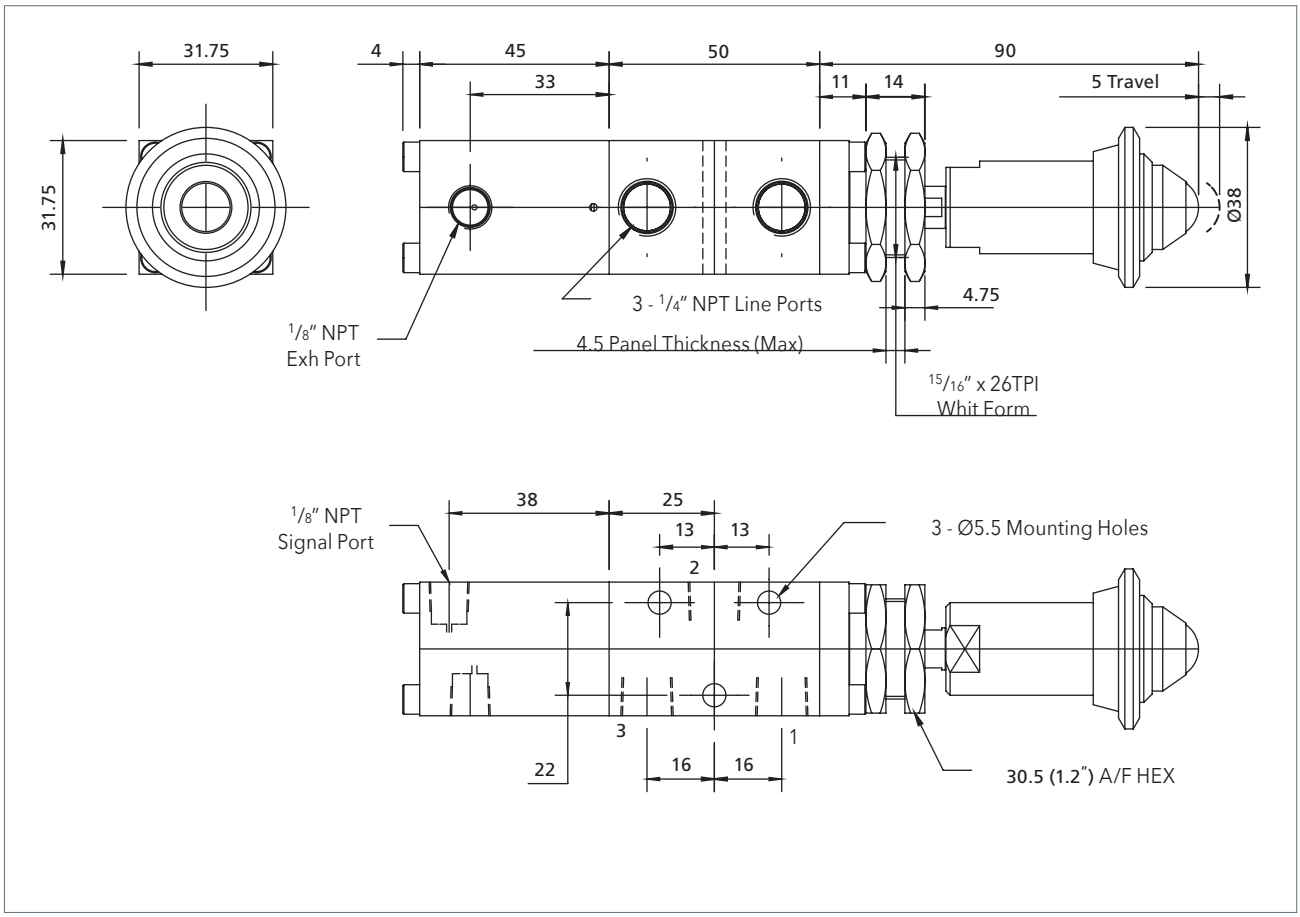

Ordering Information

Product Code	Low Temperature Version	Operating Force (N)	Weight (kg)	CV	Symbol	Product
2326M27JVR2B	2326M27JER2B	76	0.90	1.0	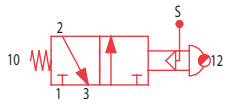	

If ATEX certification is required suffix product code with '/ATEX'

Pad operated, spring-return with pilot latch and visual indicator

The visual indicator will show RED when the valve is closed. If a pilot signal is applied the valve will not operate. When the valve is operated (via the pad) the pilot signal latches the valve in the operated position and the visual indicator will show GREEN - on loss of the pilot signal the valve will reset and the visual indicator will show RED again - reintroduction of the pilot signal will not operate the valve.

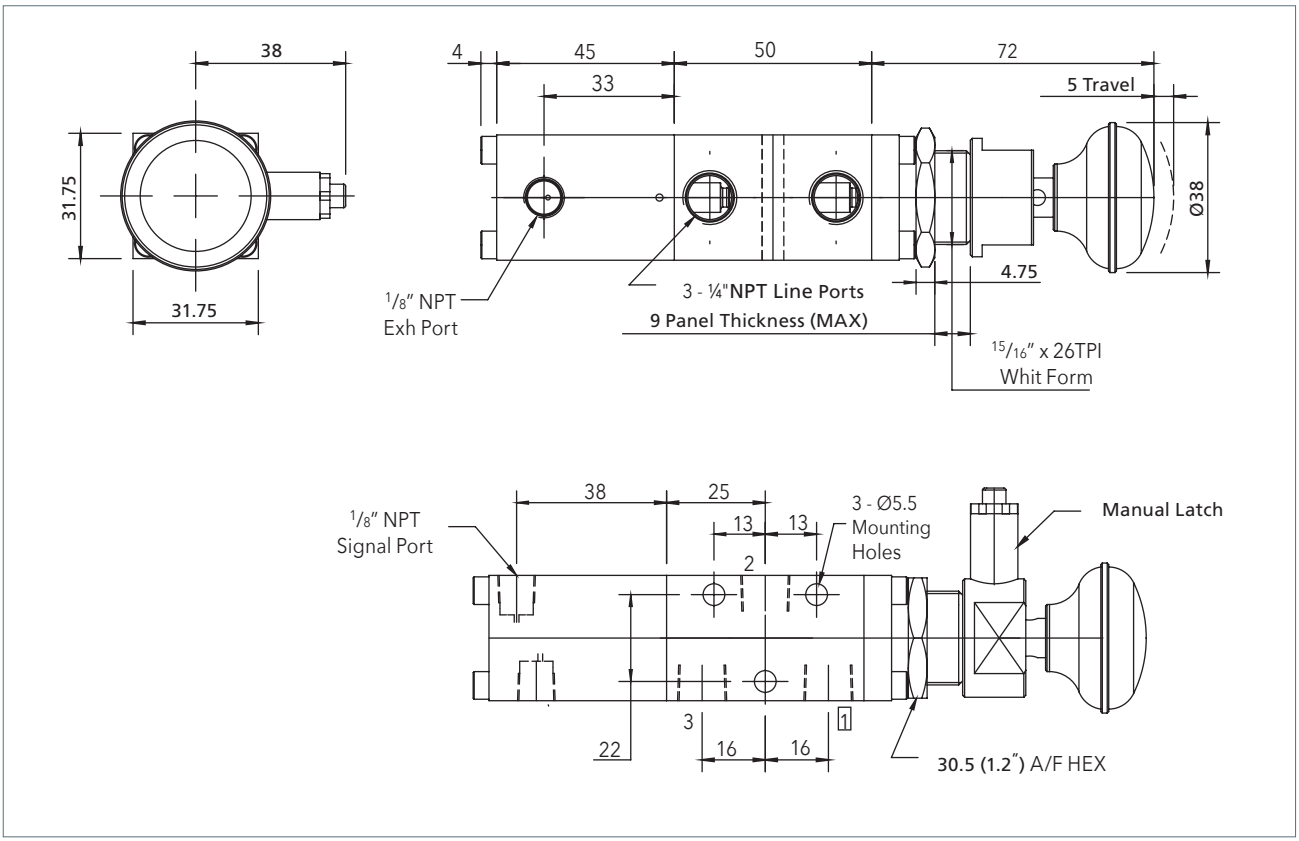

Ordering Information

Product Code	Low Temperature Version	Operating Force (N)	Weight (kg)	CV	Symbol	Product
2326M27AVR2B	2326M27AER2B	76	0.85	1.0	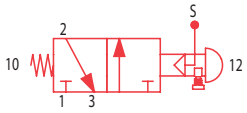	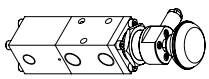

If ATEX certification is required suffix product code with '/ATEX'

Pad operated, spring-return with pilot latch and manual latch pin

Manual Operation:

To operate the valve, pull out the pad, if the pad is released the valve will return to the un-operated position.

To leave valve operated press down the manual latch pin when pad is pulled out, then release the pad so that the manual latch pin engages. To return valve to its un-operated position, pull out the pad, this will dis-engage the manual latch pin, then release the pad.

Pilot Signal Operation:

To operate the valve, pull out the pad and apply a pilot pressure of between 3 to 10 bar to the signal port, the valve will remain operated until the pilot pressure is lost.

The valve cannot be operated by pilot pressure alone, pad must be pulled out first.

Releasing the manual latch with pilot signal:

If the valve has been manual operated and latched, this can be released by applying a pilot pressure to the signal port, this will release the manual latch, so when pilot pressure is lost the valve will return to the un-operated position.

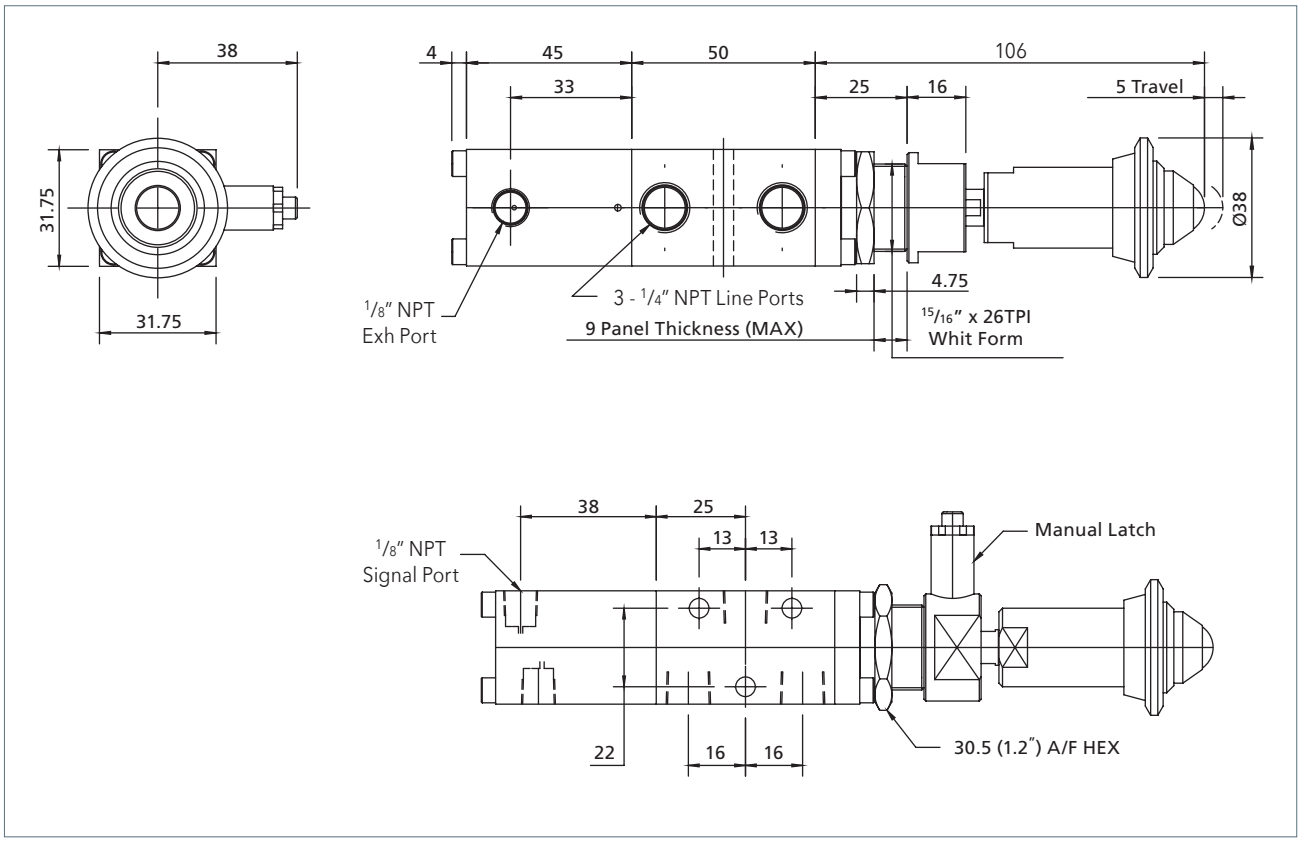

Ordering Information

Product Code	Low Temperature Version	Operating Force (N)	Weight (kg)	CV	Symbol	Product
2326M27HVR2B	2326M27HER2B	76	1.00	1.0	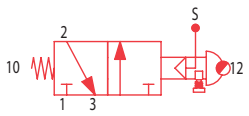	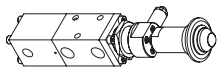

If ATEX certification is required suffix product code with '/ATEX'

Pad operated, spring-return with pilot / manual latch pin and visual indicator

The visual indicator will show RED when the valve is closed. The valve is operated by pulling out the pad - the latch pin when pressed while releasing the pad will hold the valve in the open position - the visual indicator will still show RED. When a pilot signal is applied the latch pin is released and the visual indicator will show GREEN - on loss of the pilot signal the valve closes and the visual indicator will show RED - reintroduction of the pilot signal will not operate the valve.

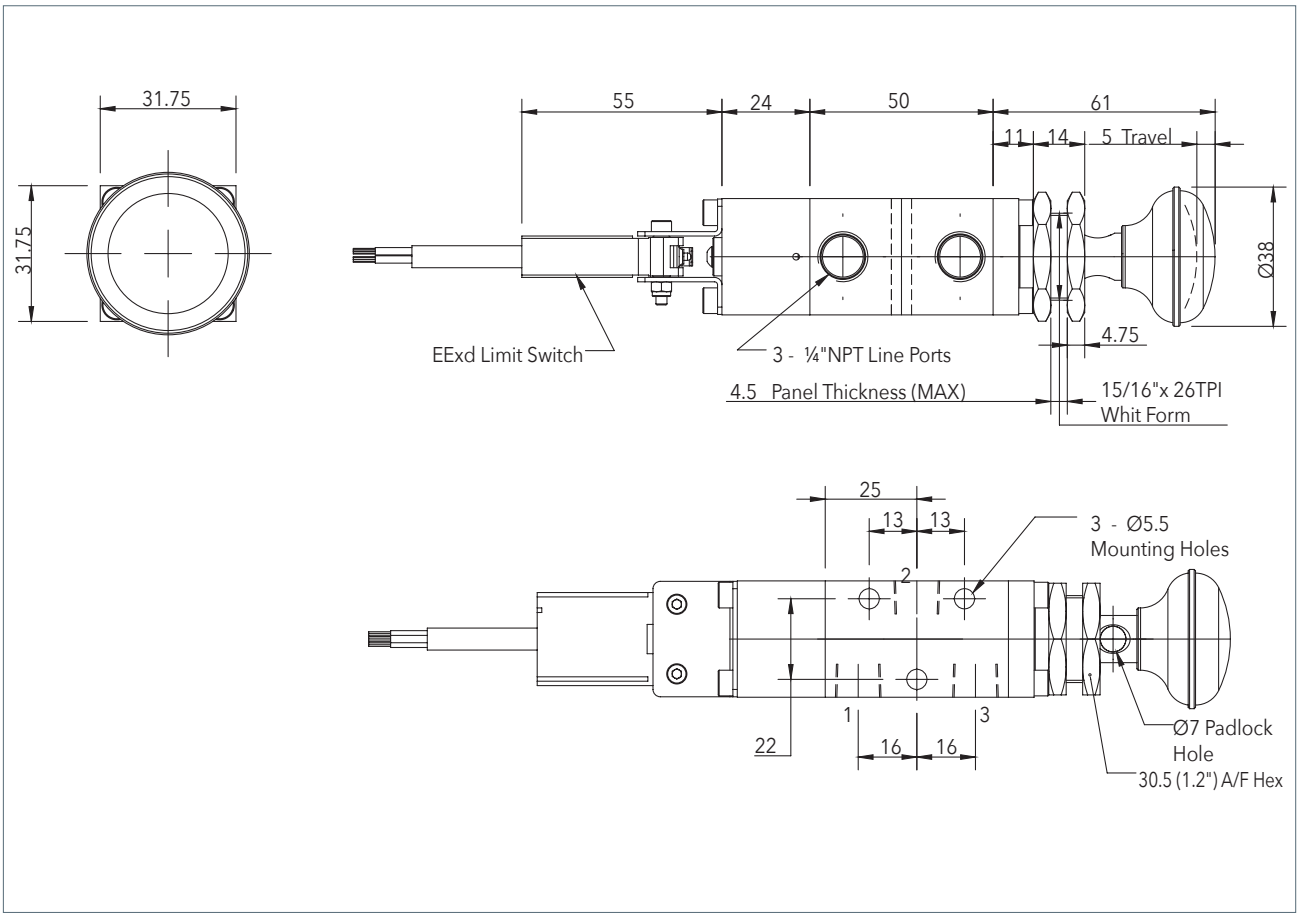

Ordering Information

Product Code	Low Temperature Version	Operating Force (N)	Weight (kg)	CV	Symbol	Product
2326B77-V1657A	2326B77-E1657A	76	0.65	1.0	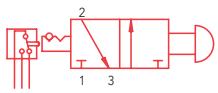	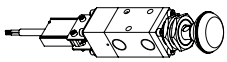

If ATEX certification is required suffix product code with '/ATEX'

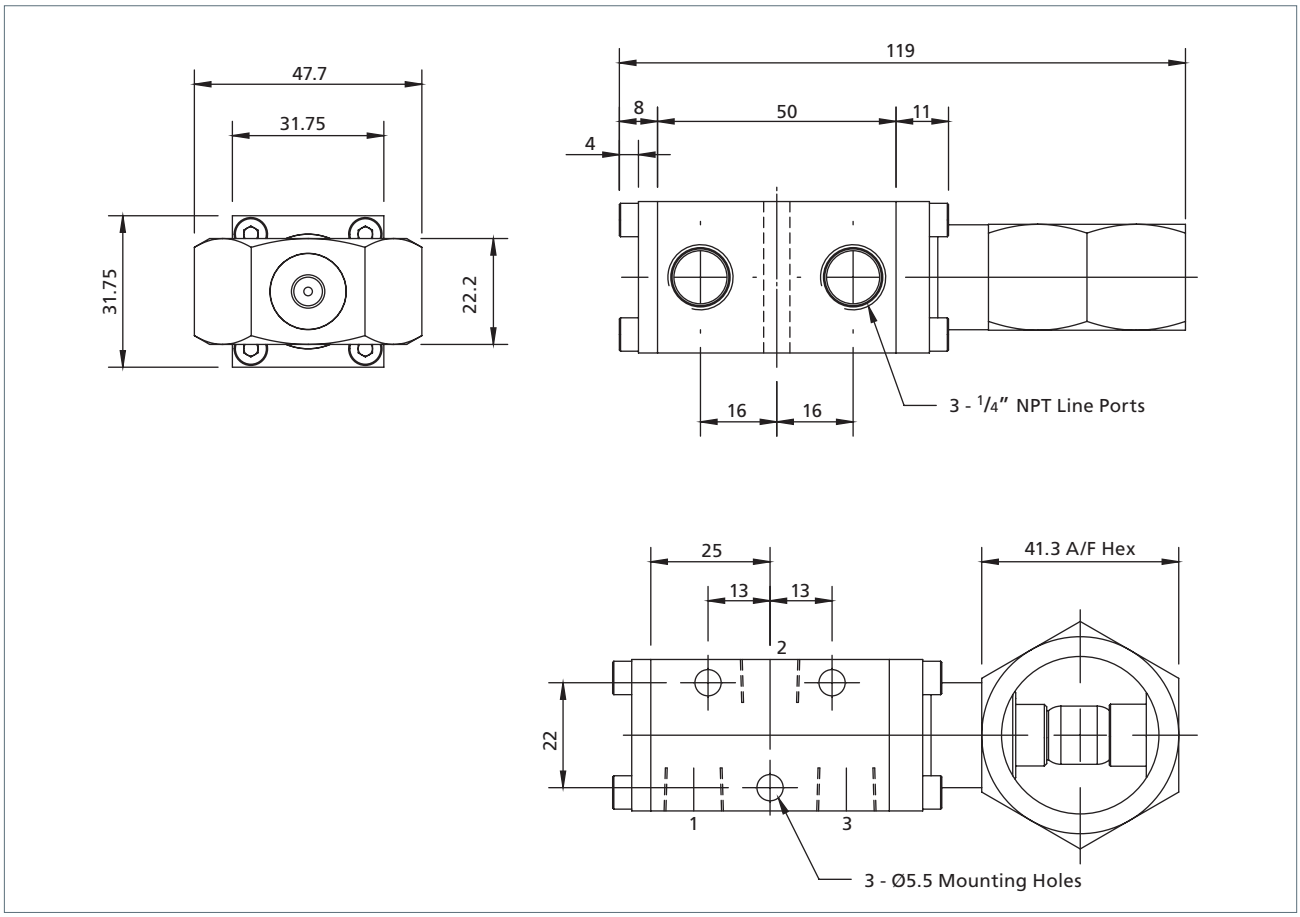

Ordering Information

Product Code	Standard Operating Temperature °C (°F)	Weight (kg)	CV	Symbol	Product
2326M2T-VR2B	68 (154)	0.85	1.0	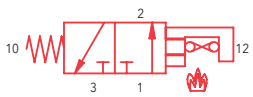	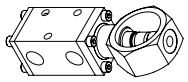
Alternative operating temperatures available suffix product code with selection from options below: e.g. 2326M2T-VR2B093					
For 79 °C (174 °F) - Suffix with 079					
For 93 °C (199 °F) - Suffix with 093					
For 141 °C (286 °F) - Suffix with 141					
Note : Other temperatures not shown above available on request.					

If ATEX certification is required suffix product code with '/ATEX'

3/2 Function

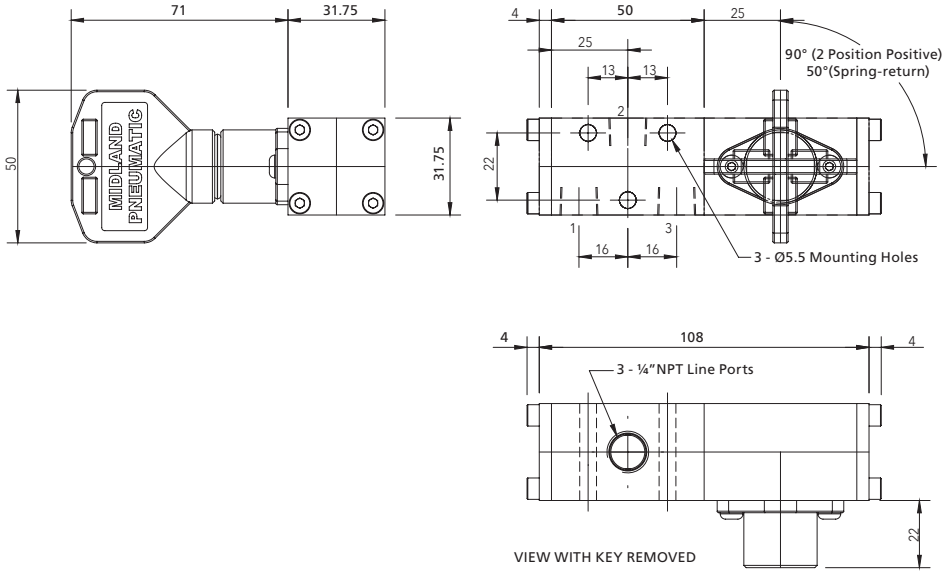

5/2 Function

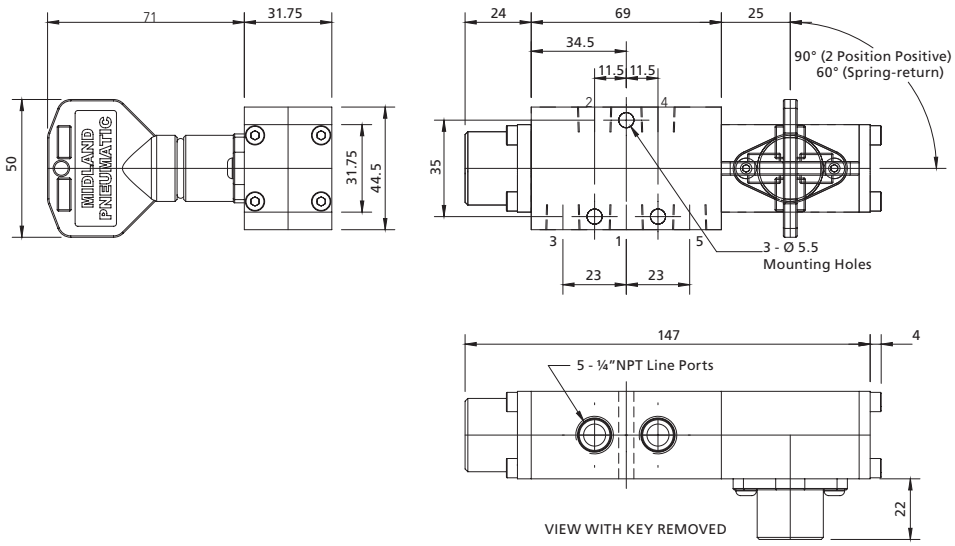

Ordering Information

Product Code	Low Temperature Version	Function	Type	Weight (kg)	CV	Symbol	Product
2326BRR-VR2B	2326BRR-ER2B	3/2	Positive	0.50	1.0	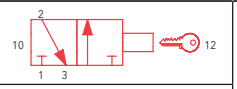	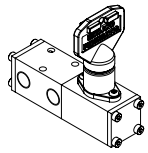
2326M2R-VR2B	2326M2R-ER2B	3/2	Spring-return	0.50	1.0	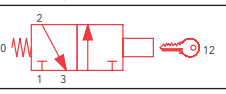	
2526BRR-VR2B	2526BRR-ER2B	5/2	Positive	0.55	1.2	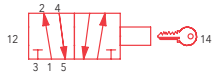	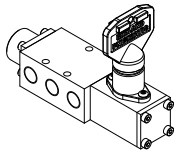
2526M2R-VR2B	2526M2R-ER2B	5/2	Spring-return	0.55	1.2	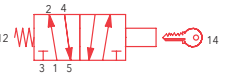	

If ATEX certification is required suffix product code with '/ATEX'

3/2 Function

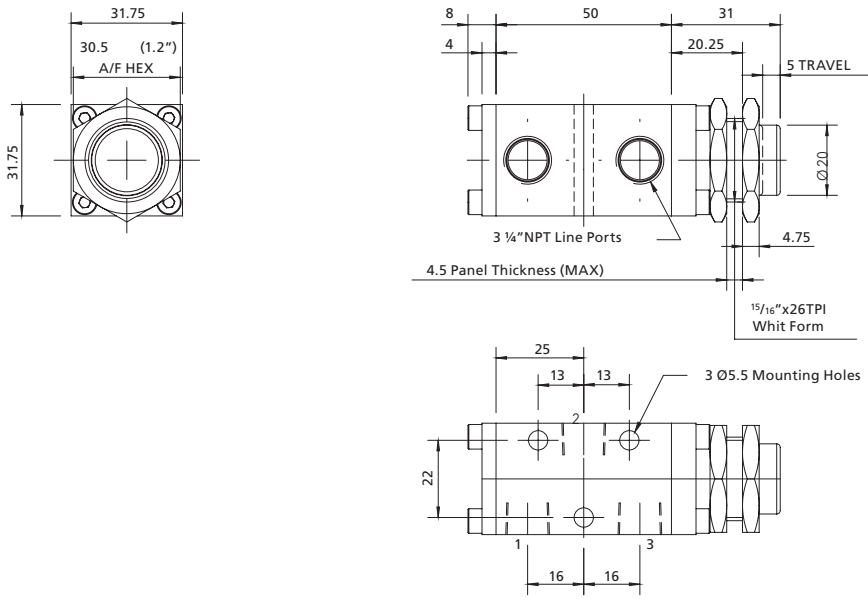

3/2 Function (guarded)

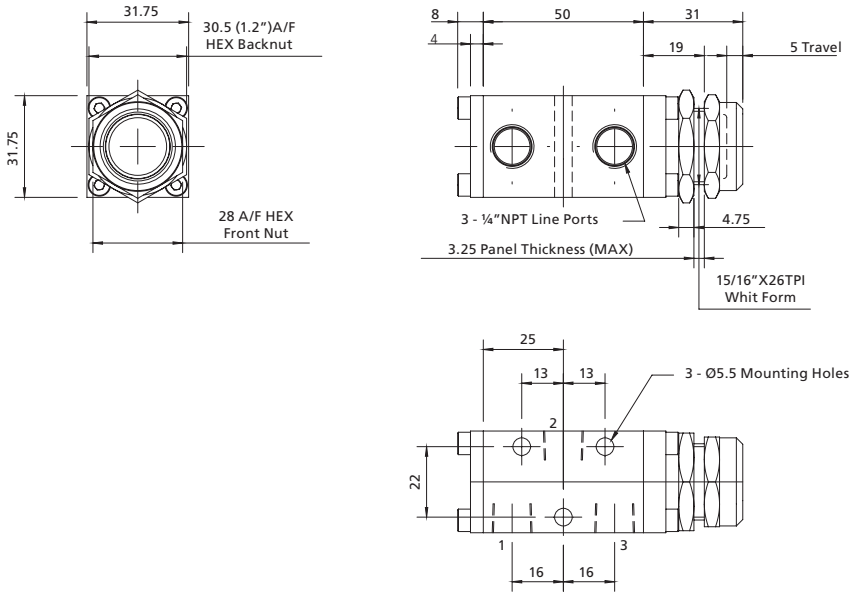

Ordering Information

Product Code	Low Temperature Version	Function	Operating Force (N)	Weight (kg)	CV	Symbol	Product
2326M2G-VR2B	2326M2G-ER2B	3/2	76	0.50	1.0	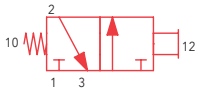	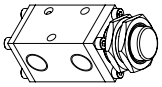
2326M2GGVR2B	2326M2GGER2B	3/2 guarded	76	0.55	1.0	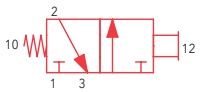	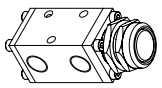

If ATEX certification is required suffix product code with '/ATEX'

3/2 Function

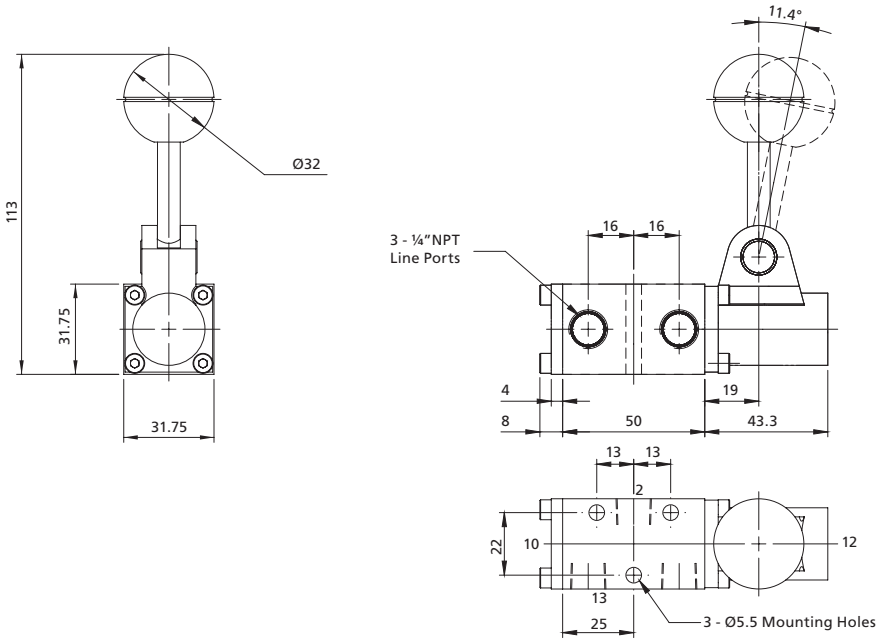

5/2 Function

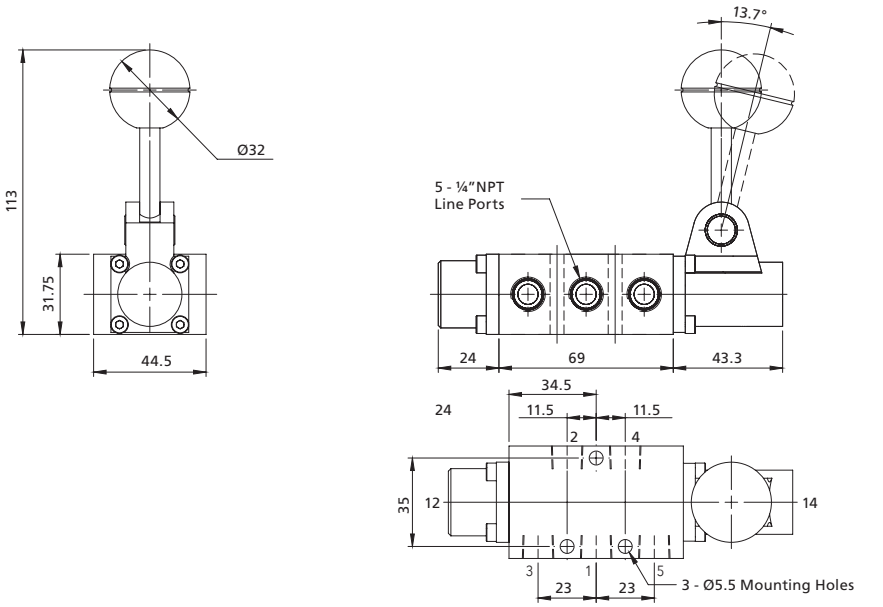

Ordering Information

Product Code	Low Temperature Version	Function	Operating Force (N)	Weight (kg)	CV	Symbol	Product
2326M25-VR2B	2326M25-ER2B	3/2	13	0.65	1.0	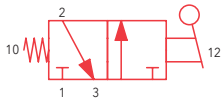	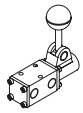
2526M25-VR2B	2526M25-ER2B	5/2	16	1.10	1.2	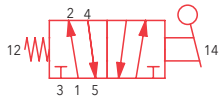	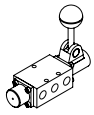

If ATEX certification is required suffix product code with '/ATEX'

3/2 Function

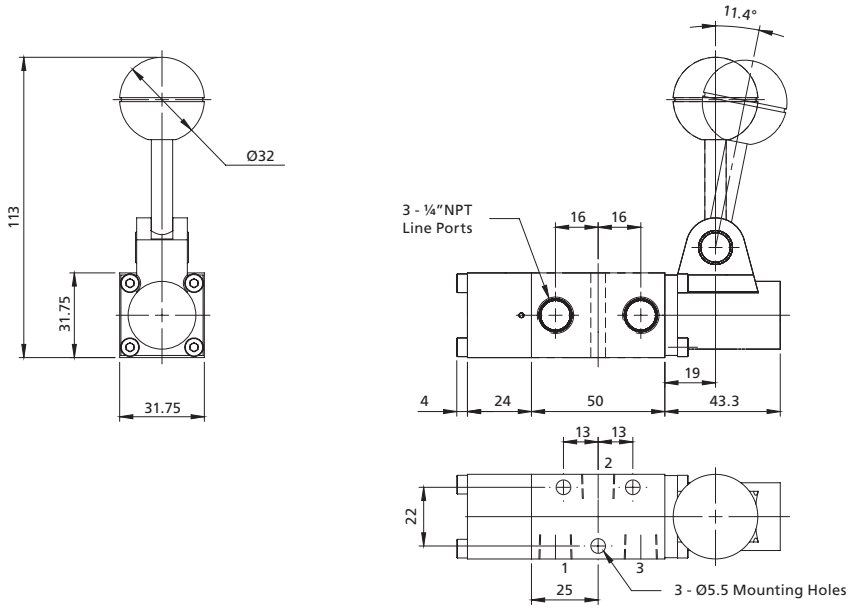

5/2 Function

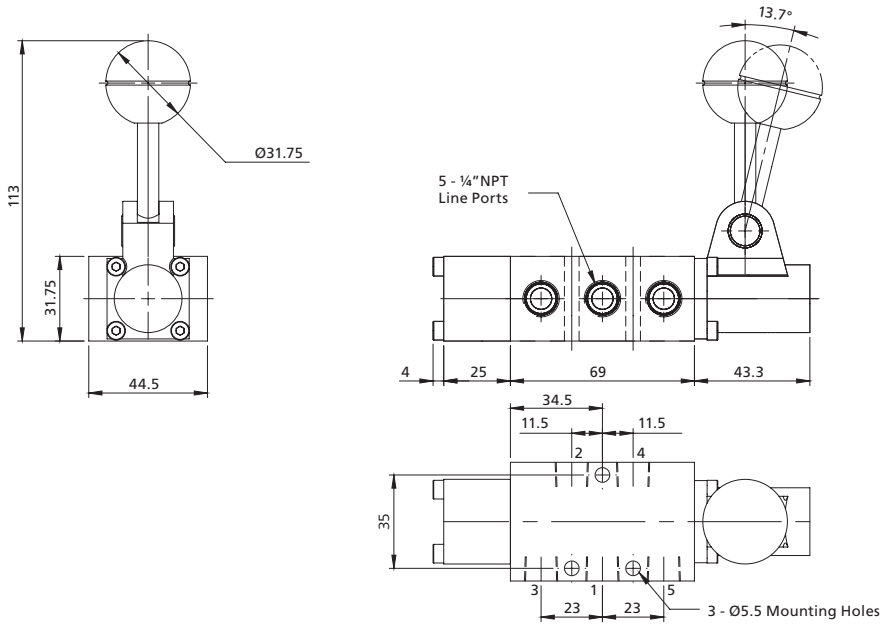

Ordering Information

Product Code	Low Temperature Version	Function	Operating Force (N)	Weight (kg)	CV	Symbol	Product
2326B553VR2B	2326B553ER2B	3/2	13	0.80	1.0	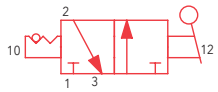	
2526B553VR2B	2526B553ER2B	5/2	16	1.10	1.2	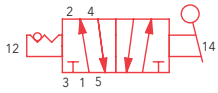	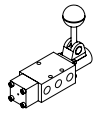

If ATEX certification is required suffix product code with '/ATEX'

A range of 3/2 and 5/2 solenoid operated spool valves in stainless steel for use on gases.

Features and Benefits

- Specifically designed for severe environments
- 3/2 and 5/2 versions
- 316L stainless steel construction
- Designed for actuator control
- NACE option available

Media & Ambient Temperature Range

Please refer to solenoid selection chart on page 62.

Working Pressure

- 12 bar (174 psi) maximum

Ports NPT (BSP Option Available)

- ¼″ NPT line port
- ⅛″ NPT pilot ports

Operating Media

- Gases - filtered lubricated or non-lubricated
- Air, inert gas, sweet (natural) gases
- Sour gas option available

Note: To prevent freezing of the condensate within the product, the media dew point must be at least 10 °C below the lowest ambient temperature the product will be exposed to.

K-TYPE solenoid shown - See Solenoid Specification Chart

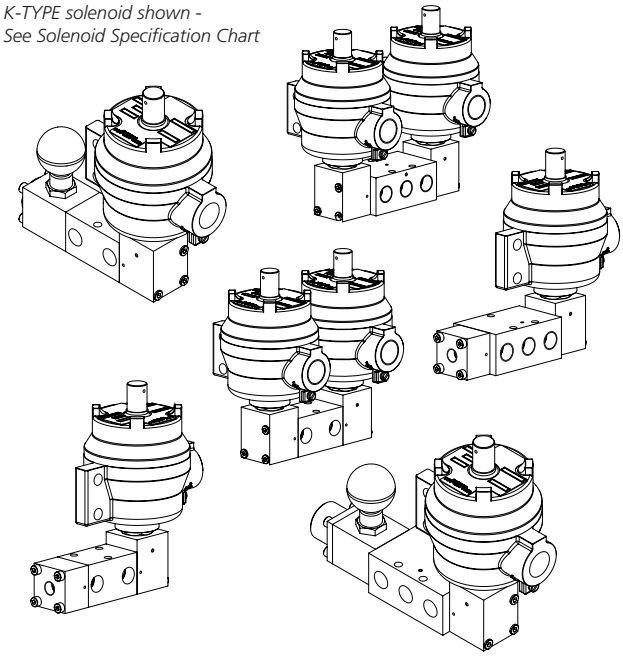

Construction Materials

- Body: 316L stainless steel
- Spool: 316 stainless steel
- Spring: 316 stainless steel
- Seals: Fluoroelastomer (EPDM[1] on low temperature options)

[1] The use of lubrication upstream of the product is not recommended for low temperature applications.

Maximum Flow

At 6 bar, 1 bar differential:

- 3/2 valves - 1,000 l/min (35.3 SCFM)
- 5/2 valves - 1,200 l/min (42.4 SCFM)

Certification Options Available

3/2 Function

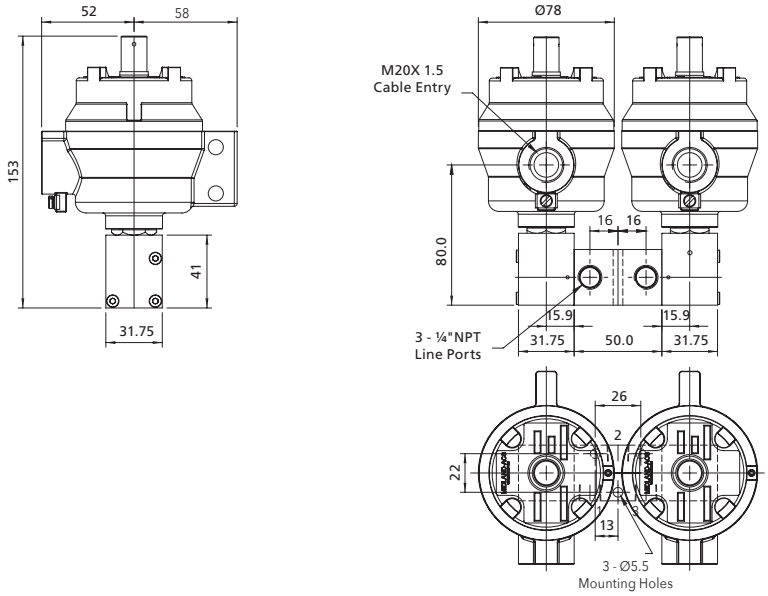

5/2 Function

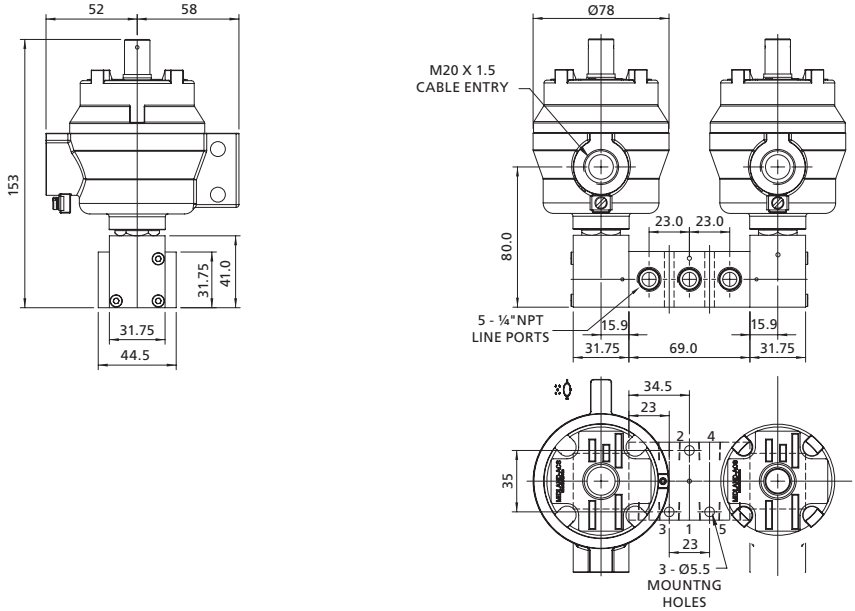

Ordering Information

Product Code	Low Temperature Version	Function	Min Working Pressure	Weight (kg)	CV	Symbol	Product
2326B33-VR2B*#	2326B33-ER2B*#	3/2	2 Bar	0.71 + Solenoids	1.0	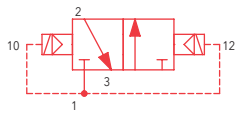	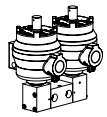
2526B33-VR2B*#	2526B33-ER2B*#	5/2	2 Bar	1.02 + Solenoids	1.2	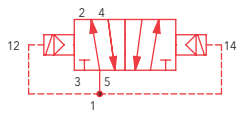	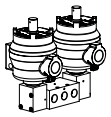

* Denotes solenoid type. See page 61-62; # Denotes Voltage. See page 61

3/2 Function

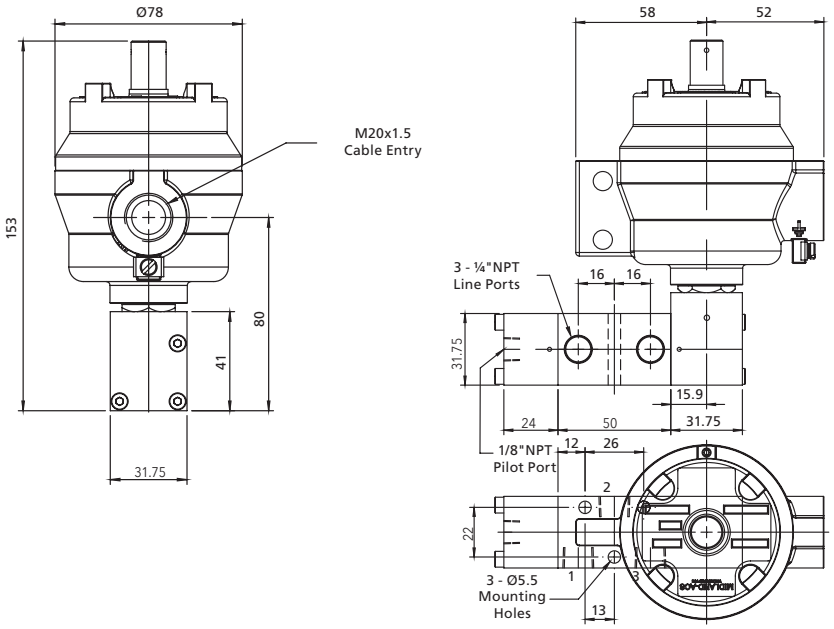

5/2 Function

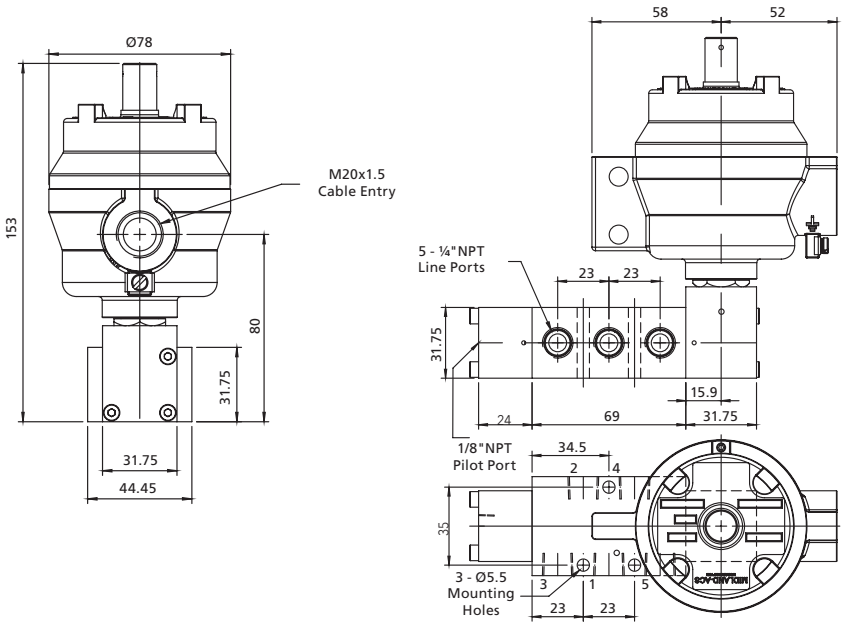

Ordering Information

Product Code	Low Temperature Version	Function	Min Working Pressure	Weight (kg)	CV	Symbol	Product
2326B13-VR2B*#	2326B13-ER2B*#	3/2	3 Bar	0.71 + Solenoid	1.0	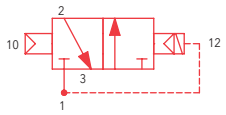	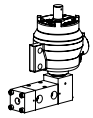
2526B13-VR2B*#	2526B13-ER2B*#	5/2	3 Bar	1.01 + Solenoid	1.2	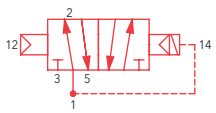	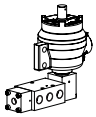

* Denotes solenoid type. See page 61-62; # Denotes Voltage. See page 61

3/2 Function

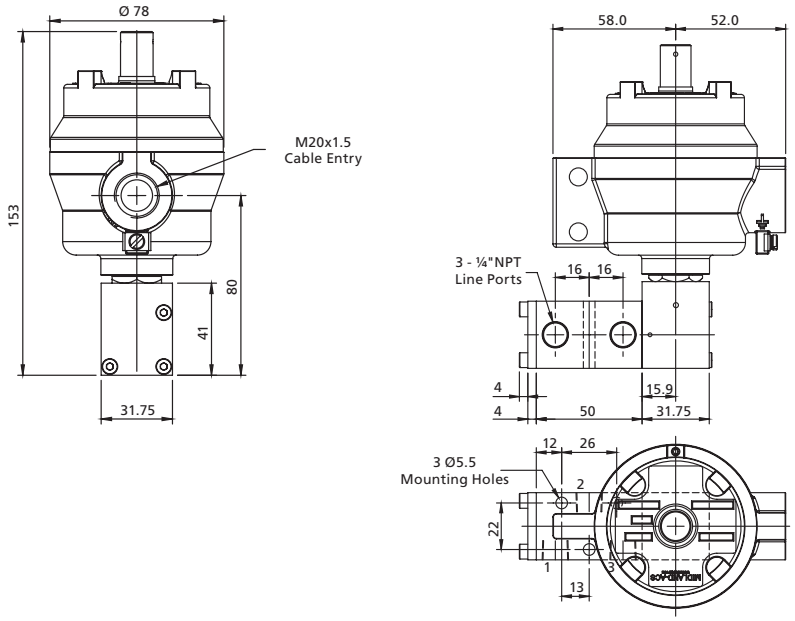

5/2 Function

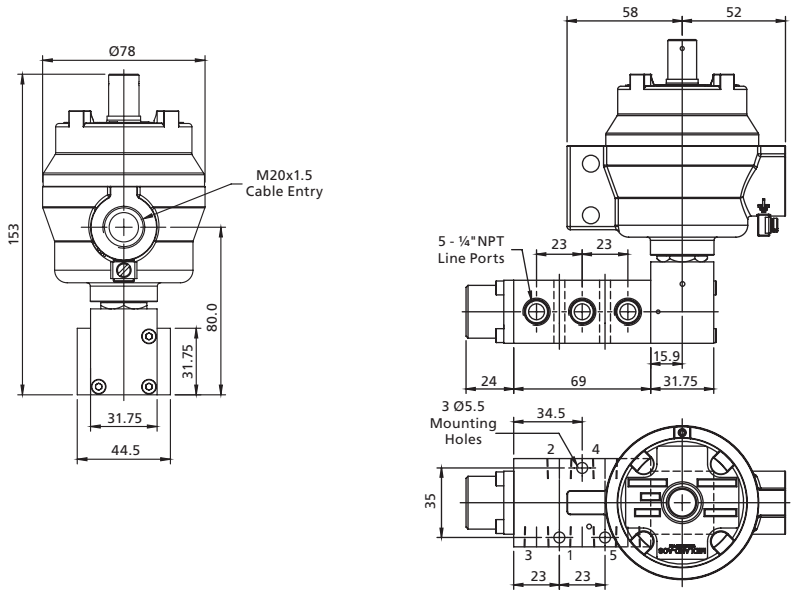

Ordering Information

Product Code	Low Temperature Version	Function	Min Working Pressure	Weight (kg)	CV	Symbol	Product
2326M23-VR2B*#	2326M23-ER2B*#	3/2	3 Bar	0.56 + Solenoid	1.0	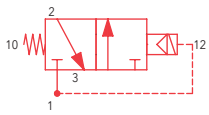	
2526M23-VR2B*#	2526M23-ER2B*#	5/2	3 Bar	1.01 + Solenoid	1.2	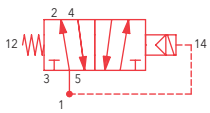	

* Denotes solenoid type. See page 61-62; # Denotes Voltage. See page 61

3/2 Function

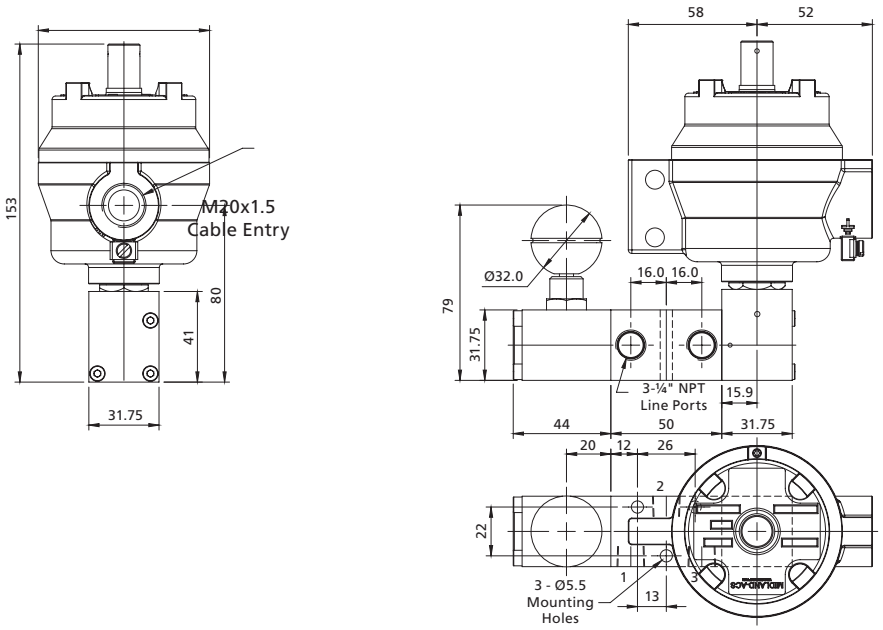

5/2 Function

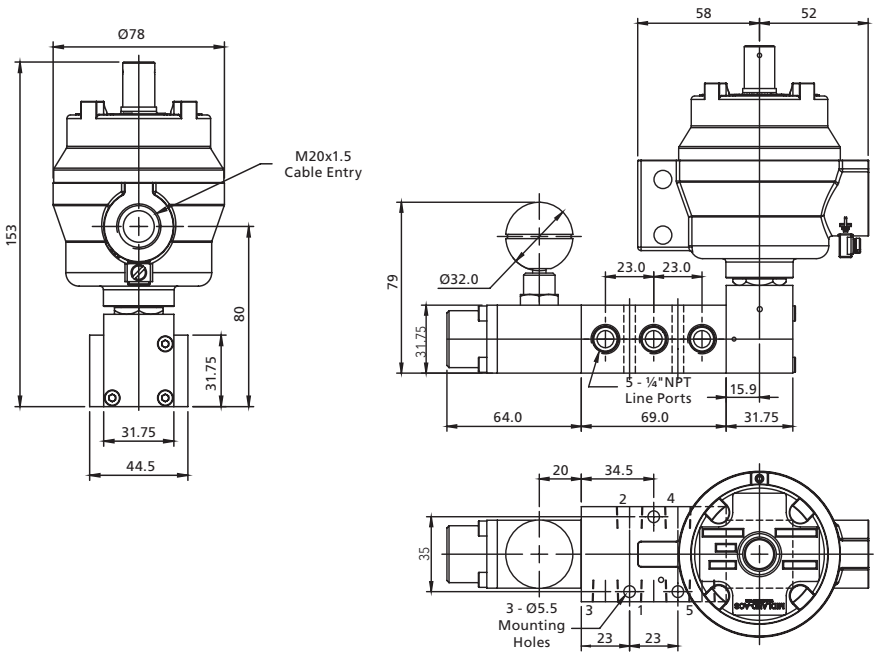

Ordering Information

Product Code	Low Temperature Version	Function	Min Working Pressure	Weight (kg)	CV	Symbol	Product
2326M232VR2B*#	2326M232ER2B*#	3/2	3 Bar	0.94 + Solenoid	1.0	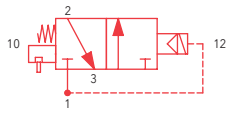	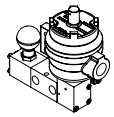
2526M232VR2B*#	2526M232ER2B*#	5/2	3 Bar	1.39 + Solenoid	1.2	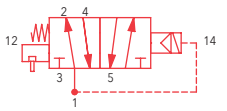	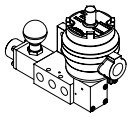

* Denotes solenoid type. See page 61-62; # Denotes Voltage. See page 61

3/2 Function

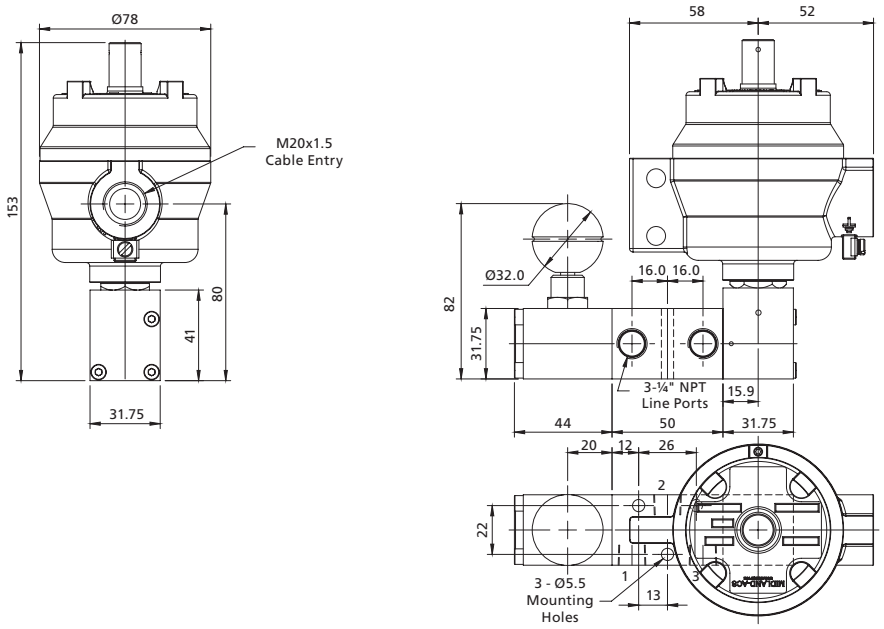

5/2 Function

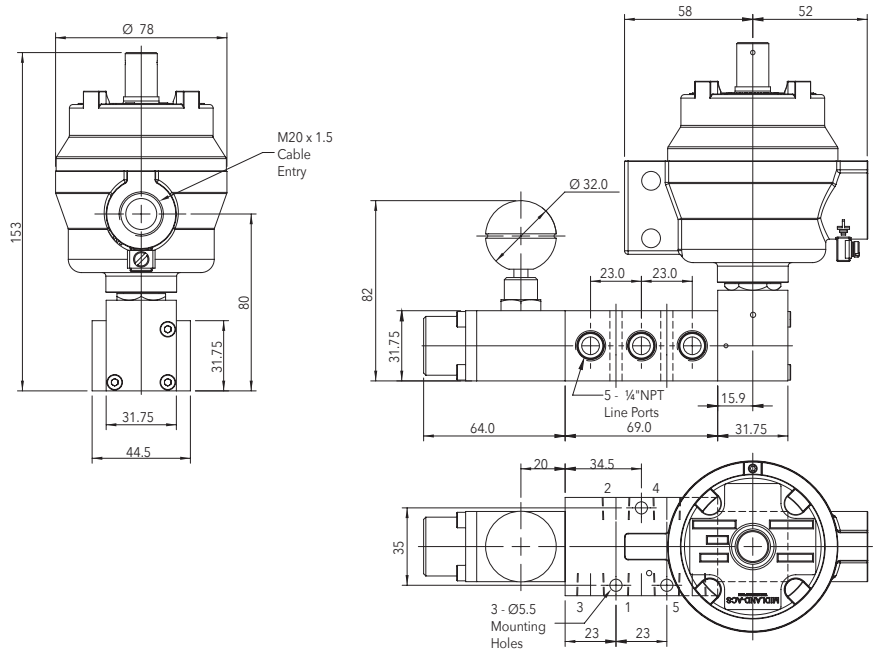

Ordering Information

Product Code	Low Temperature Version	Function	Min Working Pressure	Weight (kg)	CV	Symbol	Product
2326M238VR2B*#	2326M238ER2B*#	3/2	3 Bar	0.94 + Solenoid	1.0	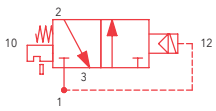	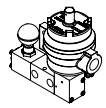
2526M238VR2B*#	2526M238ER2B*#	5/2	3 Bar	1.39 + Solenoid	1.2	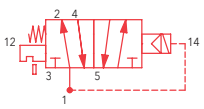	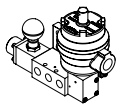

* Denotes solenoid type. See page 61-62; # Denotes Voltage. See page 61

A range of 3/2 and 5/2 pilot operated spool valves in stainless steel for use on gases.

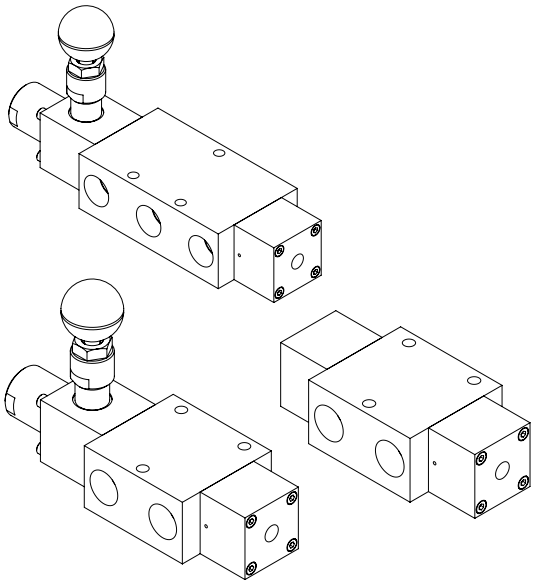

Features and Benefits

- Specifically designed for severe environments
- 3/2 and 5/2 versions
- 316L stainless steel construction
- Designed for actuator control
- NACE option available

Media & Ambient Temperature Range

- -20 to + 180 °C (-4 to +356 °F)
- Low temperature version
  -50 to +90 °C (-58 to +248 °F)

Note: When product is ordered as /ATEX ambient temperature is limited to +40 °C (104 °F) Ex II 2G c T6.

Working Pressure

- 12 bar (174 psi) maximum

Ports NPT (BSP Option Available)

- ½″ NPT line port
- ⅛″ NPT pilot ports

Operating Media

- Gases - filtered lubricated or non-lubricated
- Air, inert gas, sweet (natural) gases
- Sour gas option available

Note: To prevent freezing of the condensate within the product, the media dew point must be at least 10 °C below the lowest ambient temperature the product will be exposed to.

Construction Materials

- Body: 316L stainless steel
- Spool: 316 stainless steel
- Spring: 316 stainless steel
- Seals: Fluoroelastomer
  (EPDM[1] on low temperature options)

[1] The use of lubrication upstream of the product is not recommended for low temperature applications.

Maximum Flow

At 6 bar, 1 bar differential:

- 3/2 valves - 3,500 l/min (123 SCFM)
- 5/2 valves - 3,500 l/min (123 SCFM)

Certification Options Available

3/2 Function

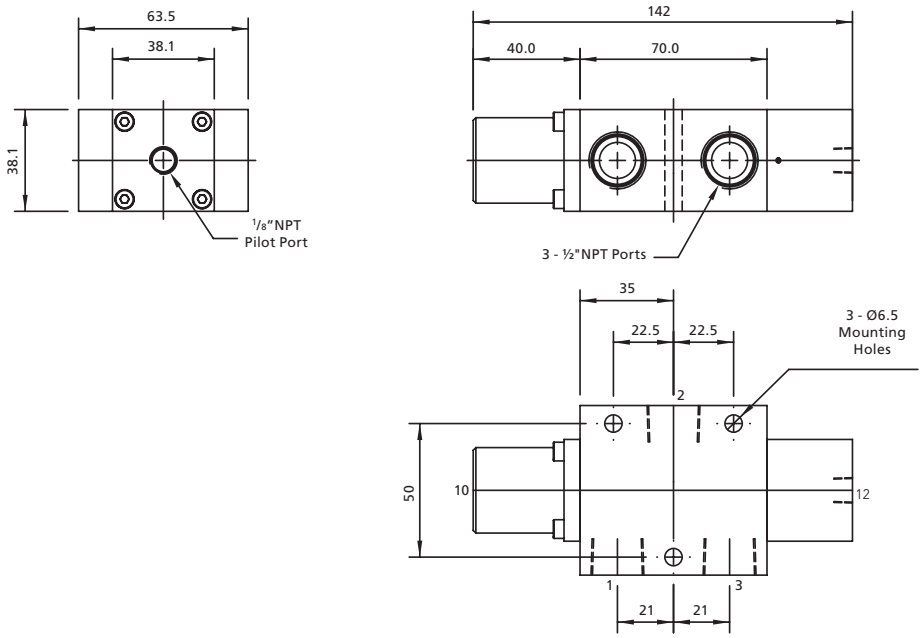

5/2 Function

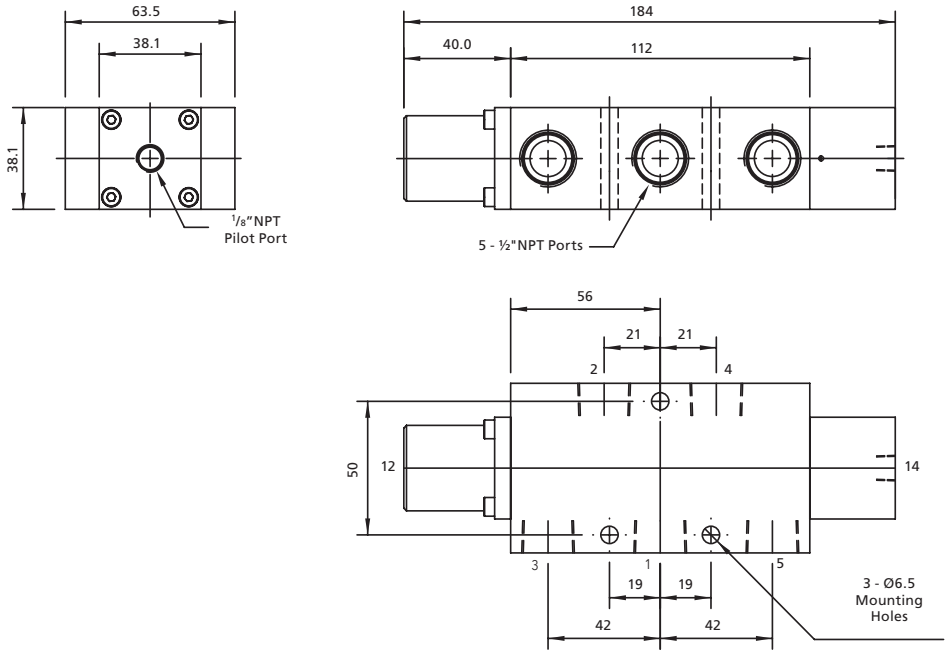

Ordering Information

Product Code	Low Temperature Version	Function	Min Working Pressure	Weight (kg)	CV	Symbol	Product
4326M21-VS2B	4326M21-ES2B	3/2	3 Bar	1.40	3.5	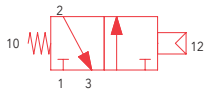	
4526M21-VS2B	4526M21-ES2B	5/2	3 Bar	2.00	3.5	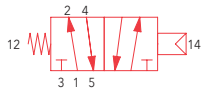	

If ATEX certification is required suffix product code with '/ATEX'

3/2 Function

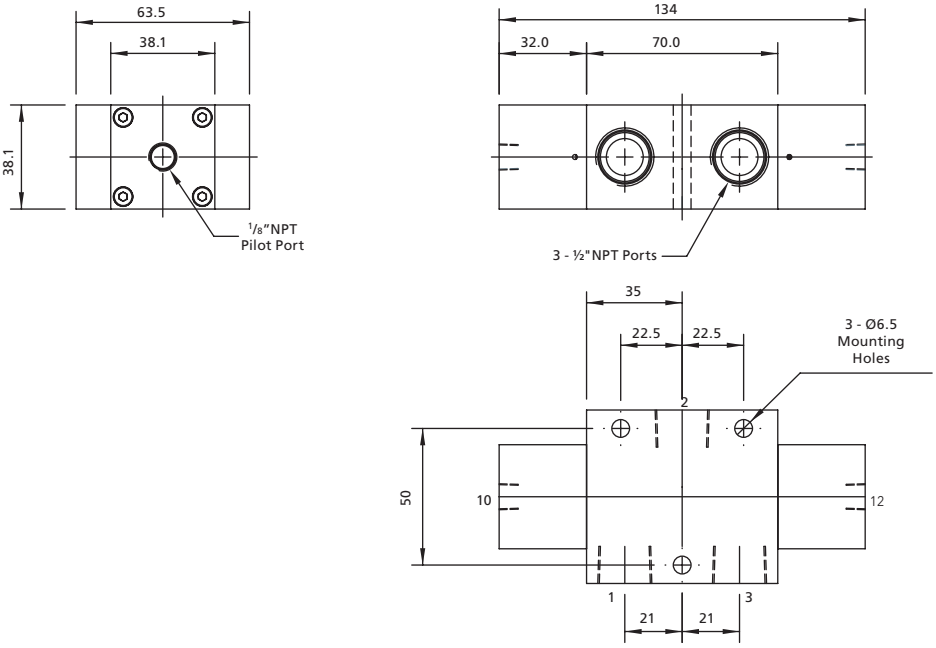

5/2 Function

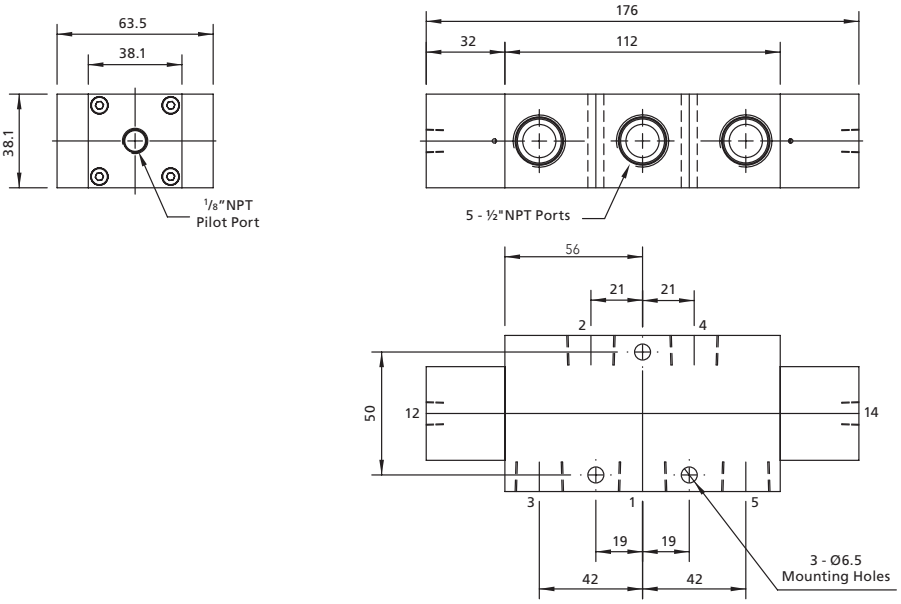

Ordering Information

Product Code	Low Temperature Version	Function	Min Working Pressure	Weight (kg)	CV	Symbol	Product
4326B11-VS2B	4326B11-ES2B	3/2	2 Bar	1.50	3.5	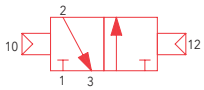	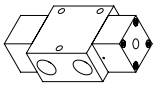
4526B11-VS2B	4526B11-ES2B	5/2	2 Bar	2.10	3.5	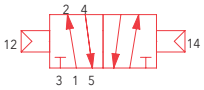	

If ATEX certification is required suffix product code with '/ATEX'

3/2 Function

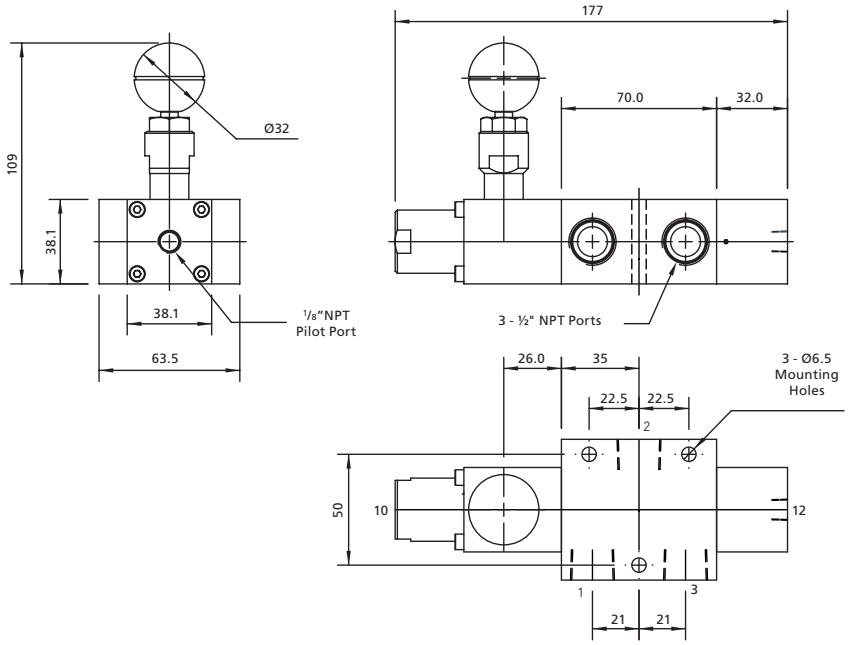

5/2 Function

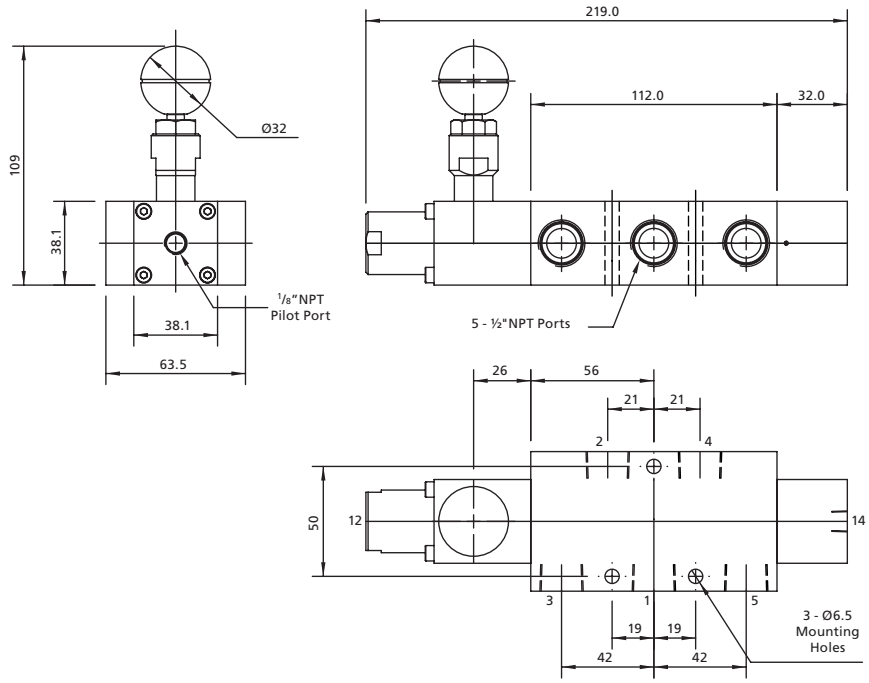

Ordering Information

Product Code	Low Temperature Version	Function	Min Working Pressure	Weight (kg)	CV	Symbol	Product
4326M212VS2B	4326M212ES2B	3/2	2 Bar	2.00	3.5	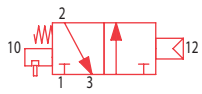	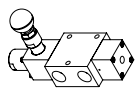
4526M212VS2B	4526M212ES2B	5/2	2 Bar	2.60	3.5		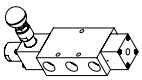

If ATEX certification is required suffix product code with '/ATEX'

3/2 Function

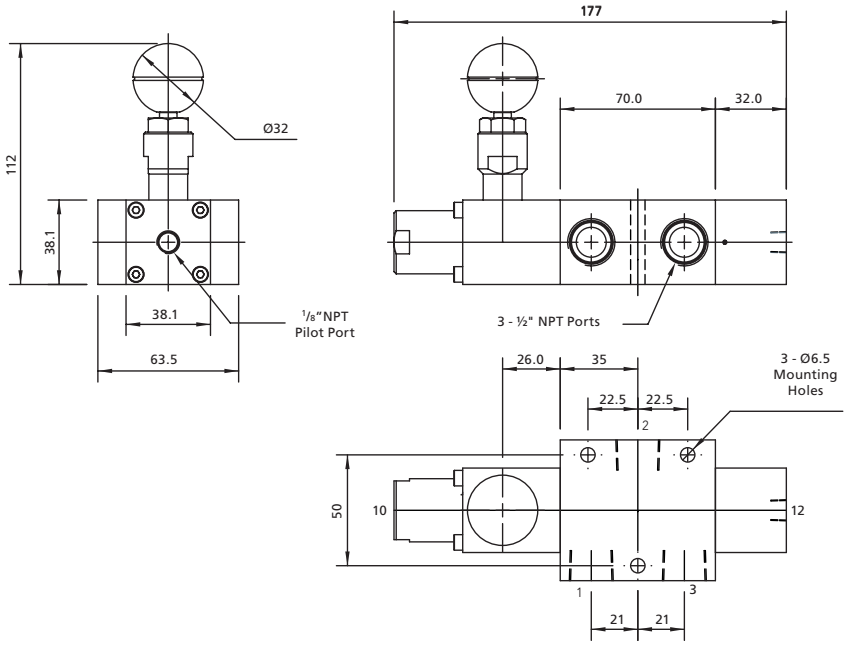

5/2 Function

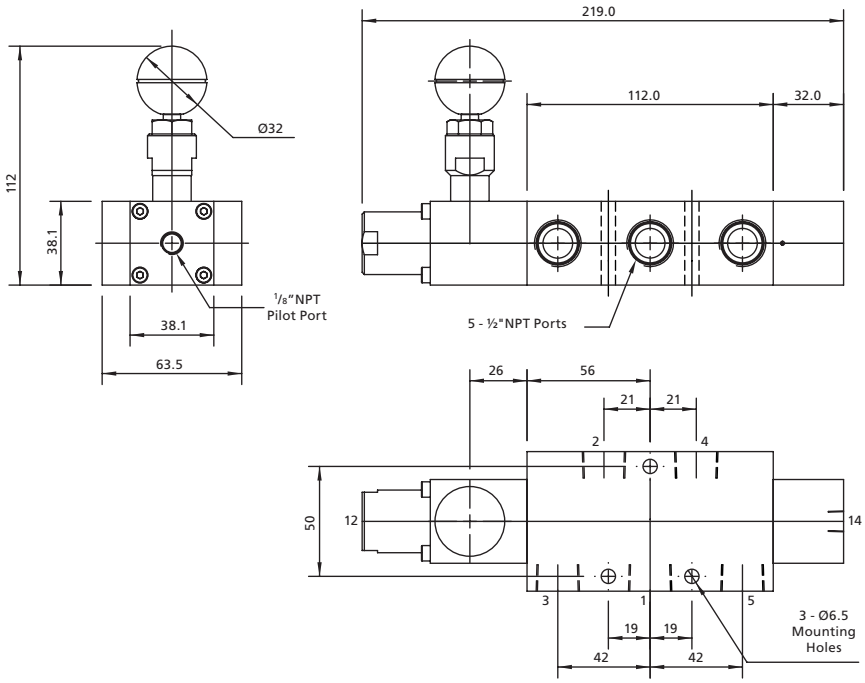

Ordering Information

Product Code	Low Temperature Version	Function	Min Working Pressure	Weight (kg)	CV	Symbol	Product
4326M218VS2B	4326M218ES2B	3/2	2 Bar	2.00	3.5	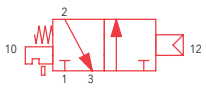	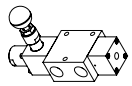
4526M218VS2B	4526M218ES2B	5/2	2 Bar	2.60	3.5	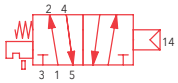	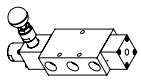

If ATEX certification is required suffix product code with '/ATEX'

A range of 3/2 and 5/2 manually operated spool valves in stainless steel for use on gases.

Features and Benefits

- Specifically designed for severe environments
- 3/2 and 5/2 versions
- 316L stainless steel construction
- Designed for actuator control
- NACE option available

Media & Ambient Temperature Range

- -20 to + 180 °C (-4 to +356 °F)
- Low temperature version
  -50 to +90 °C (-58 to +248 °F)

Note: When product is ordered as /ATEX ambient temperature is limited to +40 °C (104 °F) Ex II 2G c T6.

Working Pressure

- 12 bar (174 psi) maximum

Ports NPT (BSP Option Available)

- ½" NPT line port
- ⅛" NPT pilot ports

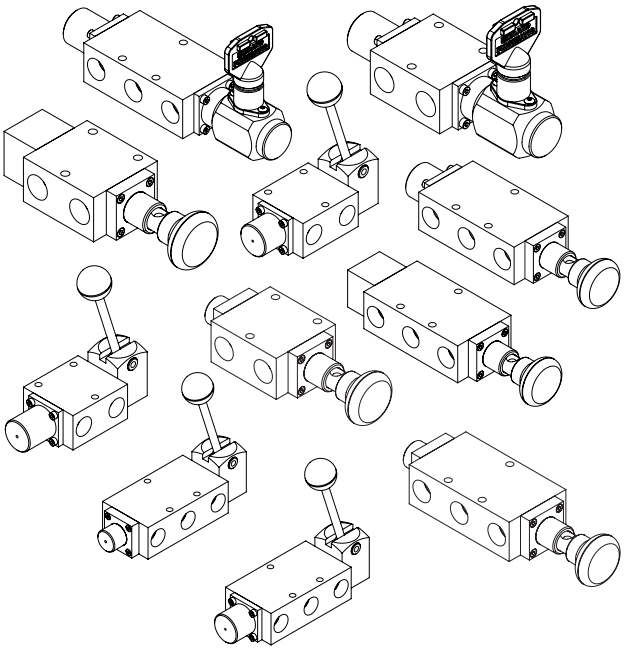

Operating Media

- Gases - filtered lubricated or non-lubricated
- Air, inert gas, sweet (natural) gases
- Sour gas option available

Note: To prevent freezing of the condensate within the product, the media dew point must be at least 10 °C below the lowest ambient temperature the product will be exposed to.

Construction Materials

- Body: 316L stainless steel
- Spool: 316 stainless steel
- Spring: 316 stainless steel
- Seals: Fluoroelastomer[1]

[1] The use of lubrication upstream of the product is not recommended for low temperature applications.

Maximum Flow

At 6 bar, 1 bar differential:

- 3/2 valves - 1,000 l/min (35.3 SCFM)
- 5/2 valves - 1,200 l/min (42.4 SCFM)

Certification Options Available

CE Ex ATEX

3/2 Function

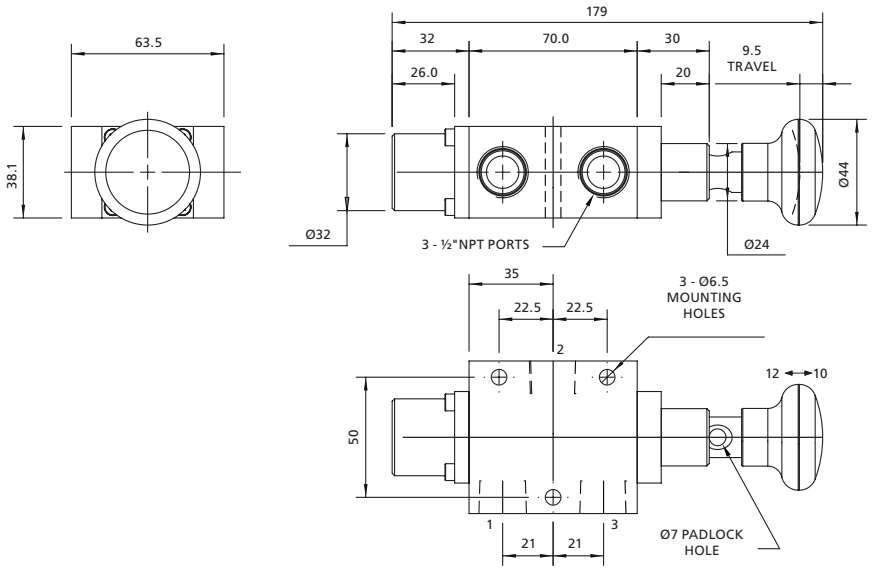

5/2 Function

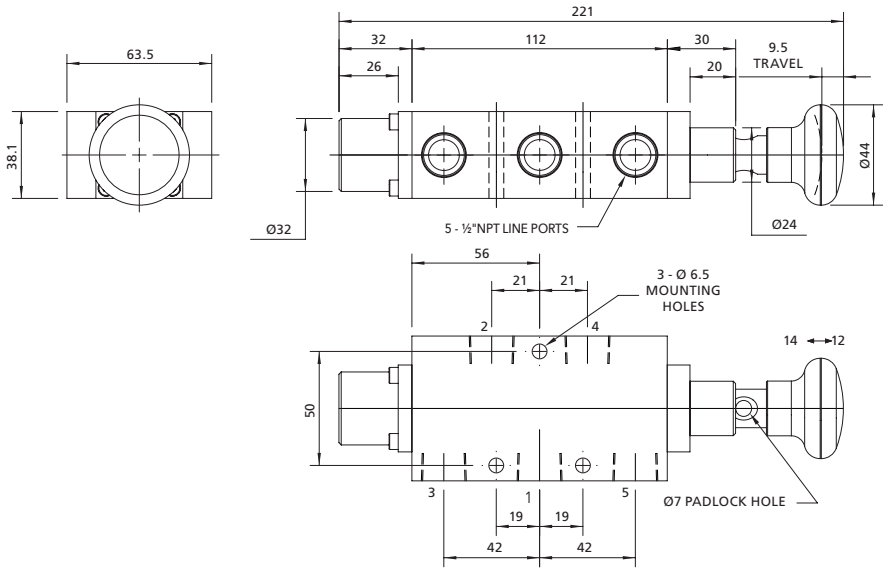

Ordering Information

Product Code	Low Temperature Version	Description	Operating Force (N)	Weight (kg)	CV	Symbol	Product
4326B77-VS2B	4326B77-ES2B	3/2 pad operated push pull	112	1.30	3.5	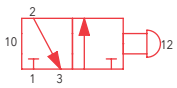	
4326B773VS2B	4326B773ES2B	3/2 pad operated push pull with detent	112	1.40	3.5	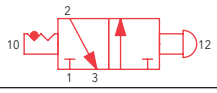	
4526B77-VS2B	4526B77-ES2B	5/2 pad operated push pull	112	1.90	3.5	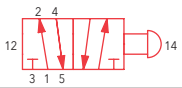	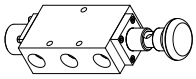
4526B773VS2B	4526B773ES2B	5/2 pad operated push pull with detent	112	2.00	3.5	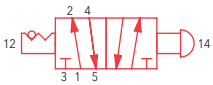	

If ATEX certification is required suffix product code with '/ATEX'

3/2 Function

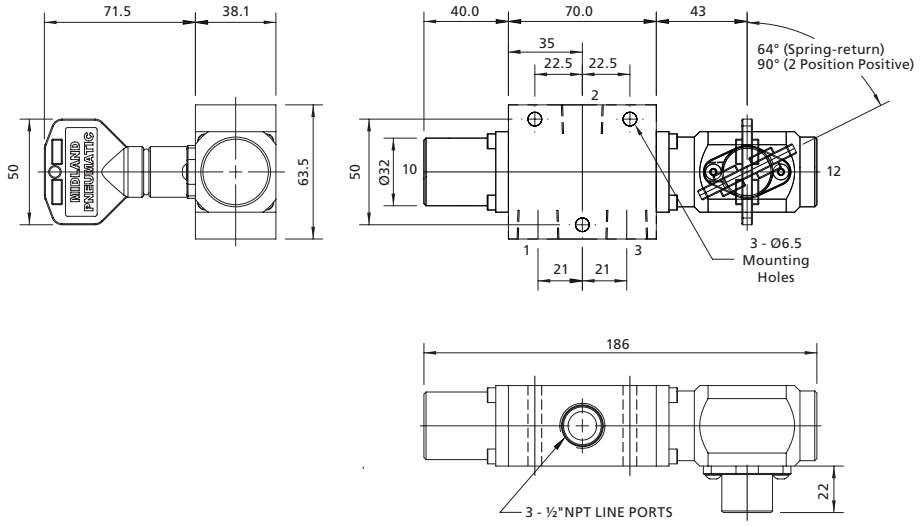

VIEW WITH KEY REMOVED

5/2 Function

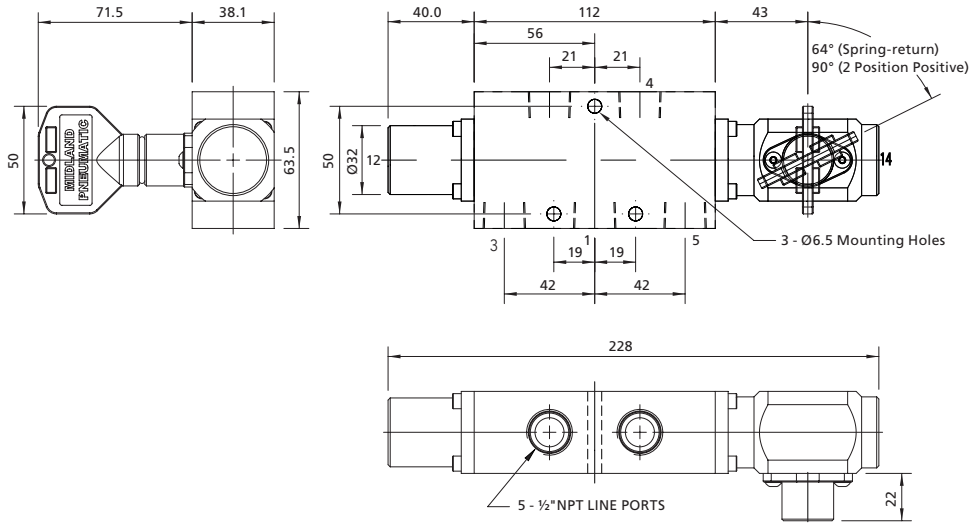

VIEW WITH KEY REMOVED

Ordering Information

Product Code	Low Temperature Version	Description	Operating Force (N)	Weight (kg)	CV	Symbol	Product
4326BRR-VS2B	4326BRR-ES2B	3/2 key operated 2 position positive	61	1.75	3.5	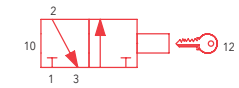	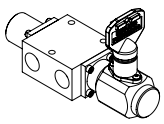
4326M2R-VS2B	4326M2R-ES2B	3/2 key operated spring-return	61	1.75	3.5	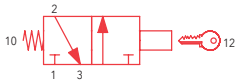	
4526BRR-VS2B	4526BRR-ES2B	5/2 key operated 2 position positive	61	2.4	3.5		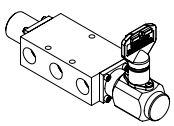
4526M2R-VS2B	4526M2R-ES2B	5/2 key operated spring-return	61	2.4	3.5		

If ATEX certification is required suffix product code with '/ATEX'

3/2 Function

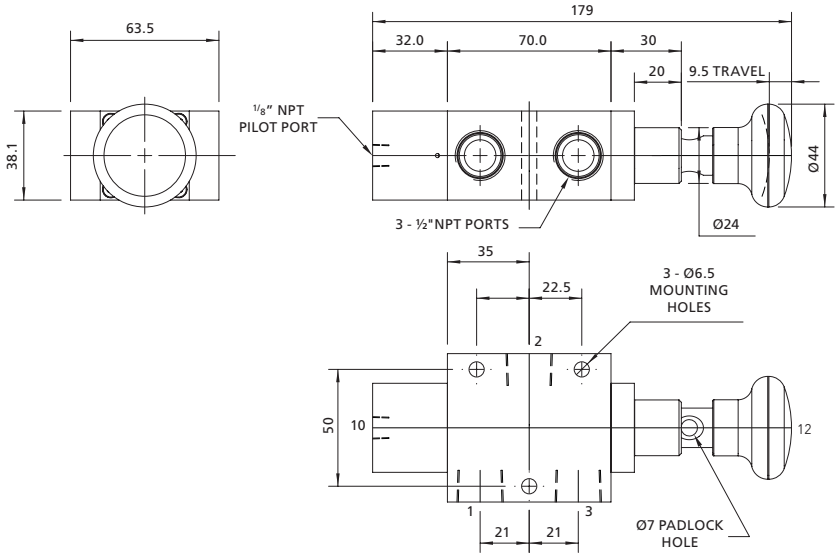

5/2 Function

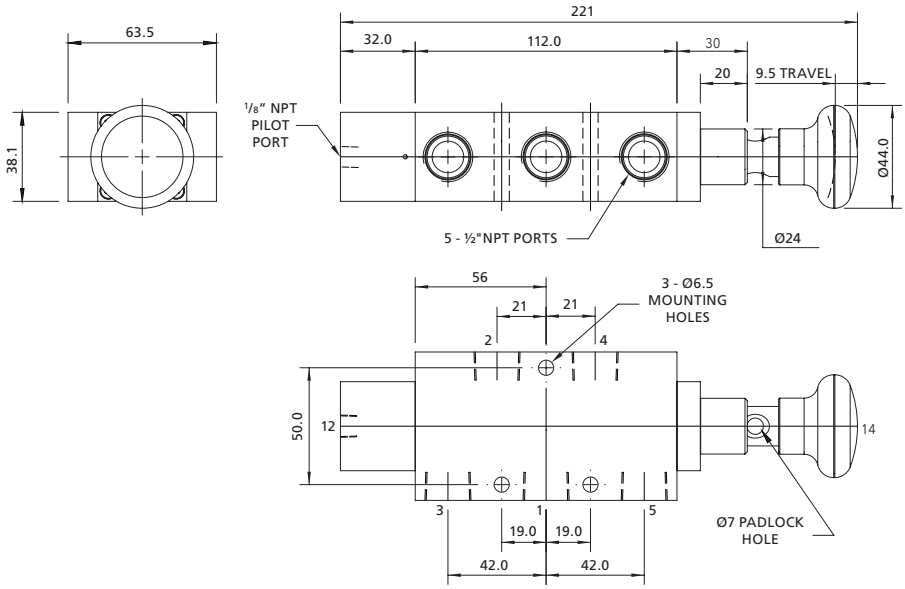

Ordering Information

Product Code	Low Temperature Version	Function	Operating Force (N)	Weight (kg)	CV	Symbol	Product
4326B17-VS2B	4326B17-ES2B	3/2	112	1.50	3.5	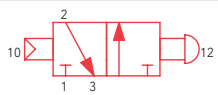	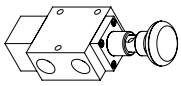
4526B17-VS2B	4526B17-ES2B	5/2	112	2.10	3.5	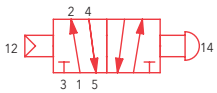	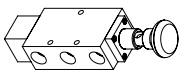

If ATEX certification is required suffix product code with '/ATEX'

3/2 Function

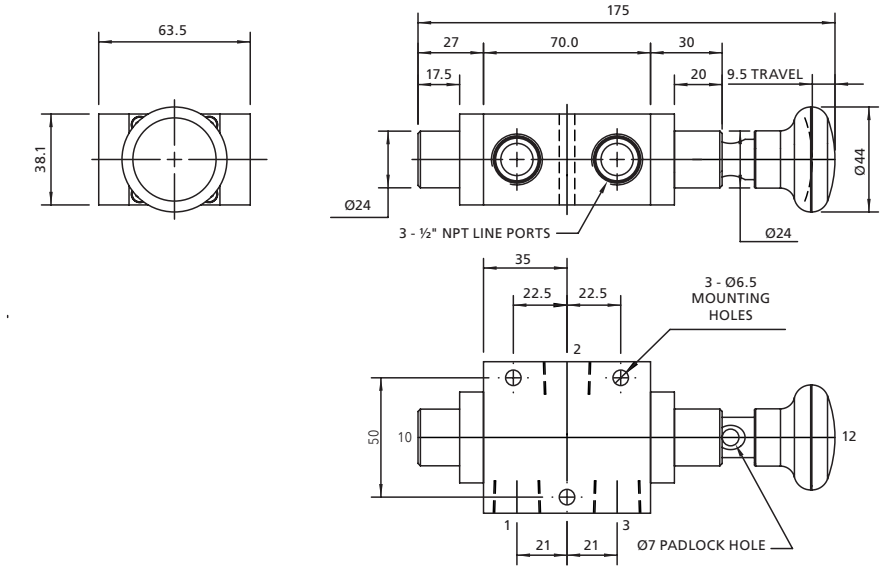

5/2 Function

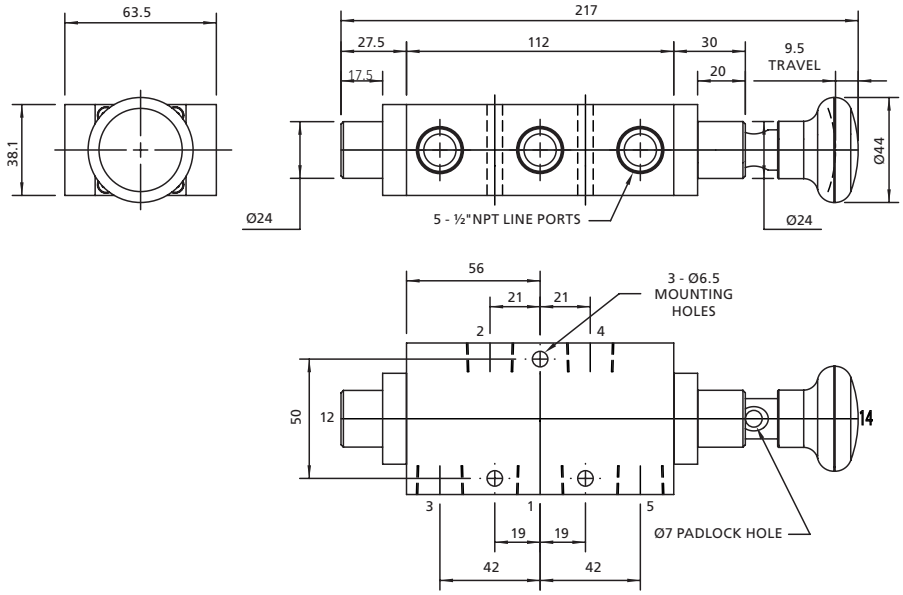

Ordering Information

Product Code	Low Temperature Version	Function	Operating Force (N)	Weight (kg)	CV	Symbol	Product
4326M27-VS2B	4326M27-ES2B	3/2	112	1.35	3.5	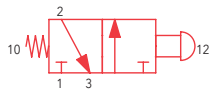	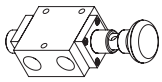
4526M27-VS2B	4526M27-ES2B	5/2	112	1.95	3.5	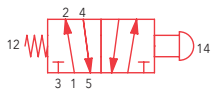	

If ATEX certification is required suffix product code with '/ATEX'

3/2 Function

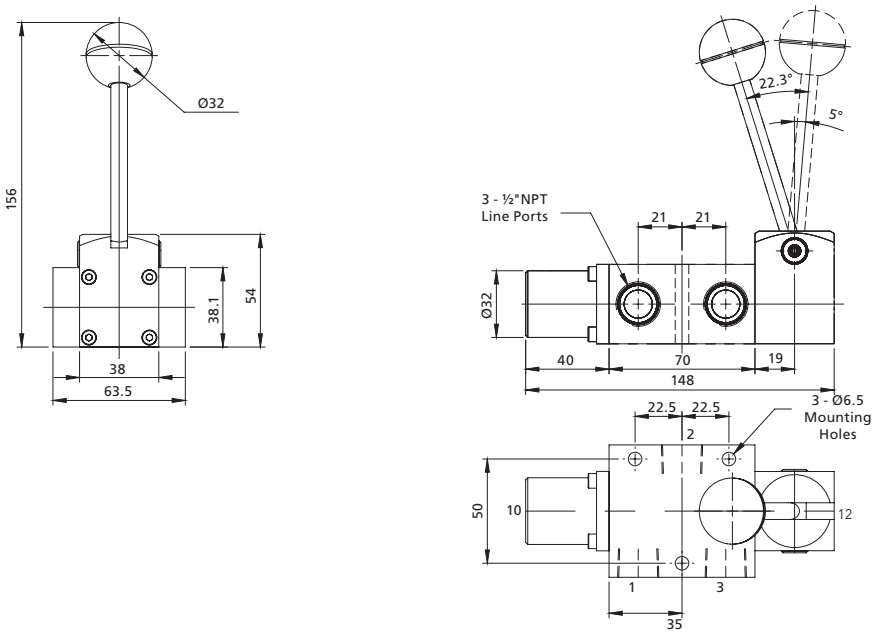

5/2 Function

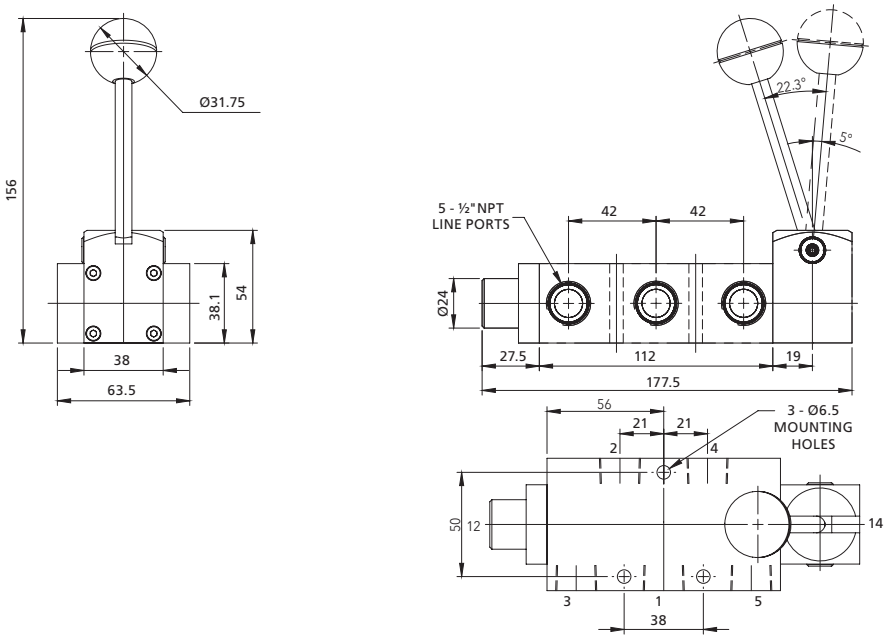

Ordering Information

Product Code	Low Temperature Version	Function	Operating Force (N)	Weight (kg)	CV	Symbol	Product
4326M25-VS2B	4326M25-ES2B	3/2	61	1.40	3.5	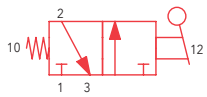	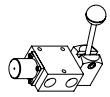
4526M25-VS2B	4526M25-ES2B	5/2	61	2.0	3.5	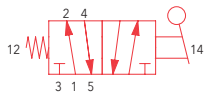	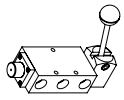

If ATEX certification is required suffix product code with '/ATEX'

3/2 Function

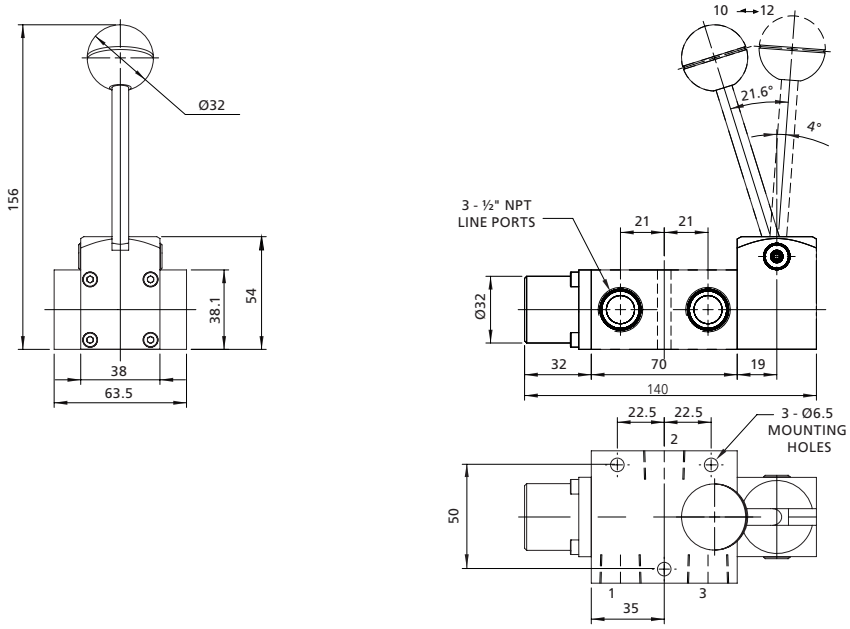

5/2 Function

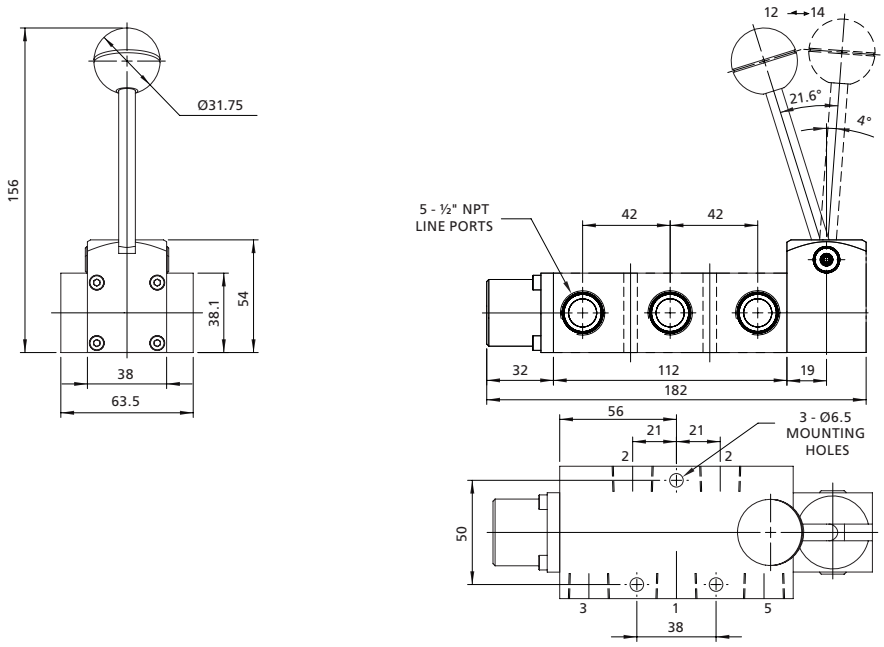

Ordering Information

Product Code	Low Temperature Version	Function	Operating Force (N)	Weight (kg)	CV	Symbol	Product
4326B553VS2B	4326B553ES2B	3/2	61	1.50	3.5	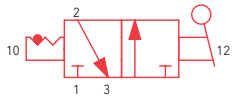	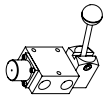
4526B553VS2B	4526B553ES2B	5/2	61	2.10	3.5	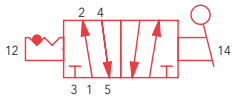	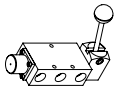

If ATEX certification is required suffix product code with '/ATEX'

A range of 3/2 and 5/2 solenoid operated spool valves in stainless steel for use on gases.

Features and Benefits

- Specifically designed for severe environments
- 3/2 and 5/2 versions
- 316L stainless steel construction
- Designed for actuator control
- NACE option available

Media & Ambient Temperature Range

Please refer to solenoid selection chart on page 62.

Working Pressure

- 12 bar (174 psi) maximum

Ports NPT (BSP Option Available)

- ½" NPT line port
- ⅛" NPT pilot ports

Operating Media

- Gases - filtered lubricated or non-lubricated
- Air, inert gas, sweet (natural) gases
- Sour gas option available

Note: To prevent freezing of the condensate within the product, the media dew point must be at least 10 °C below the lowest ambient temperature the product will be exposed to.

K-TYPE solenoid shown - See Solenoid Specification Chart

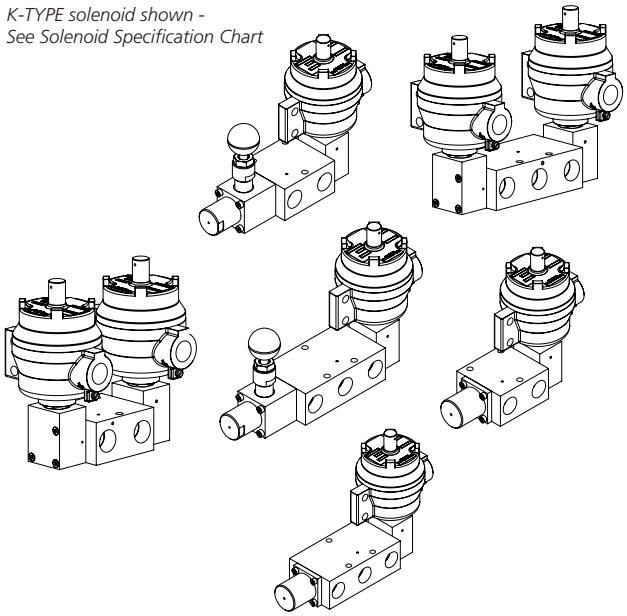

Construction Materials

- Body: 316L stainless steel
- Spool: 316 stainless steel
- Spring: 316 stainless steel
- Seals: Fluoroelastomer[1]

[1] The use of lubrication upstream of the product is not recommended for low temperature applications.

Maximum Flow

At 6 bar, 1 bar differential:

- 3/2 valves - 3,500 l/min (123 SCFM)
- 5/2 valves - 3,500 l/min (123 SCFM)

Certification Options Available

3/2 Function

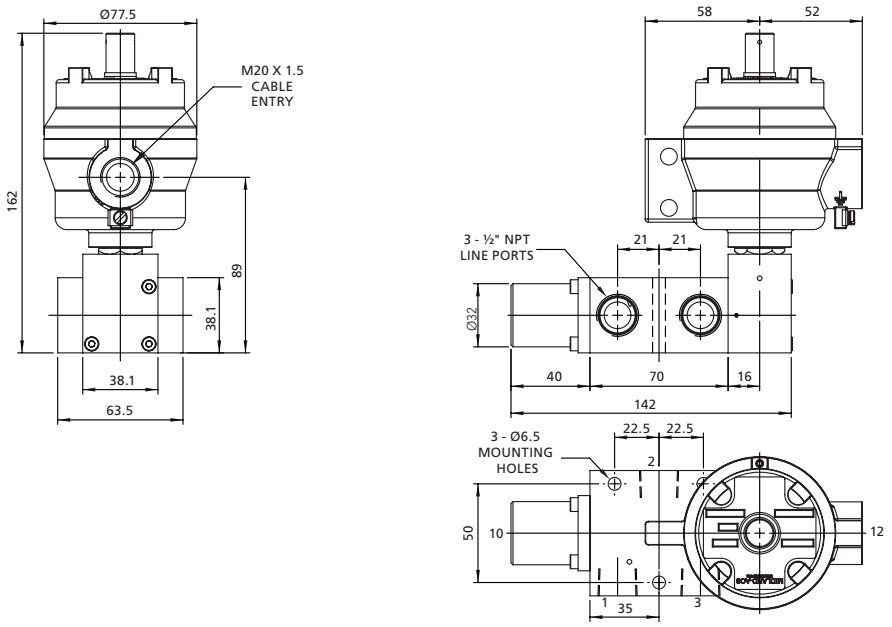

5/2 Function

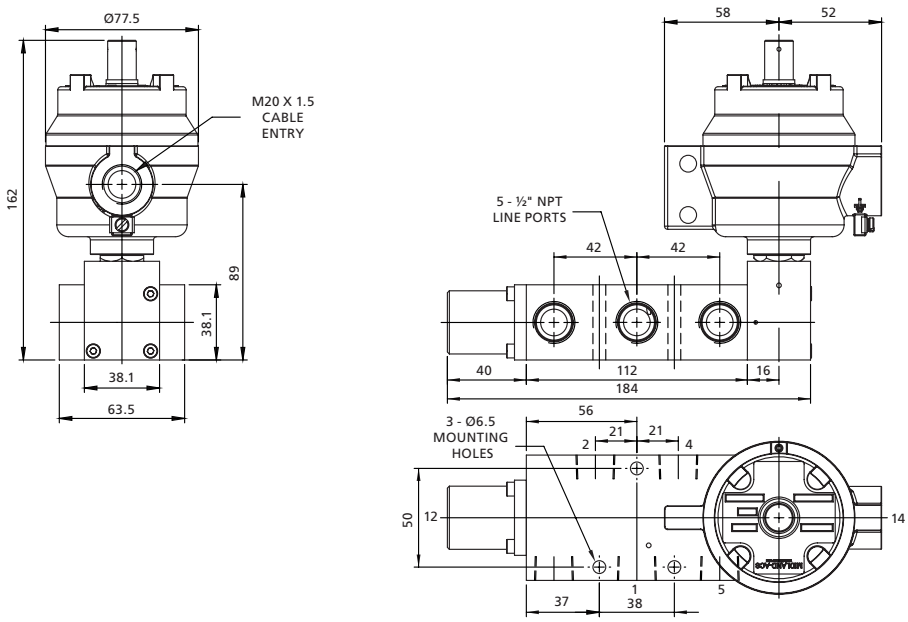

Ordering Information

Product Code	Low Temperature Version	Function	Min Working Pressure	Weight (kg)	CV	Symbol	Product
4326M23-VS2B*#	4326M23-ES2B*#	3/2	3 Bar	1.50 + Solenoid	3.5	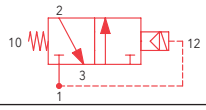	
4526M23-VS2B*#	4526M23-ES2B*#	5/2	3 Bar	2.10 + Solenoid	3.5	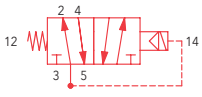	

* Denotes solenoid type. See page 61-62; # Denotes Voltage. See page 61

3/2 Function

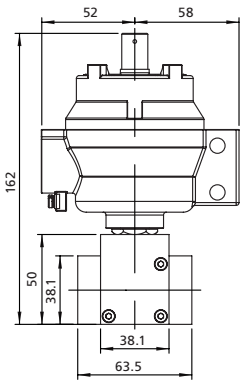

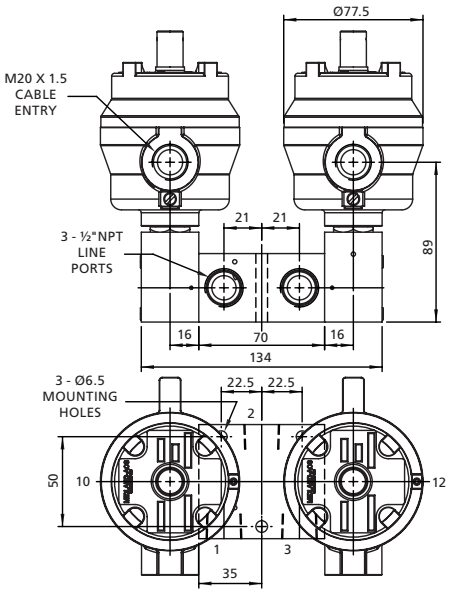

5/2 Function

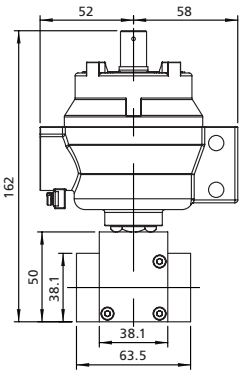

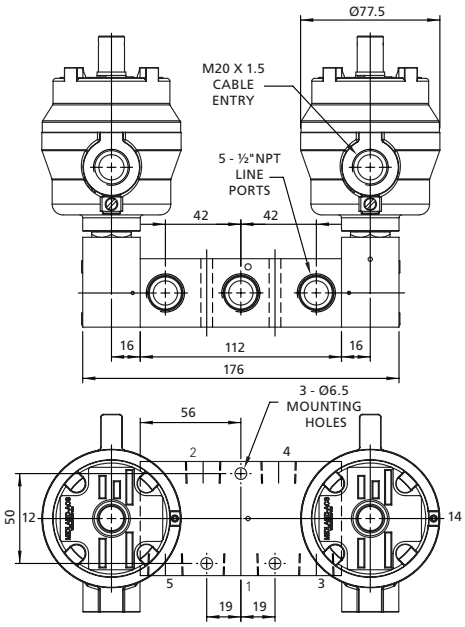

Ordering Information

Product Code	Low Temperature Version	Function	Min Working Pressure	Weight (kg)	CV	Symbol	Product
4326B33-VS2B*#	4326B33-ES2B*#	3/2	2 Bar	1.70 + Solenoids	3.5	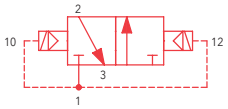	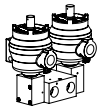
4526B33-VS2B*#	4526B33-ES2B*#	5/2	2 Bar	2.30 + Solenoids	3.5	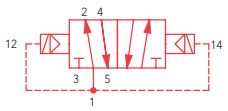	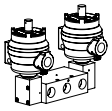

* Denotes solenoid type. See page 61-62; # Denotes Voltage. See page 61

3/2 Function

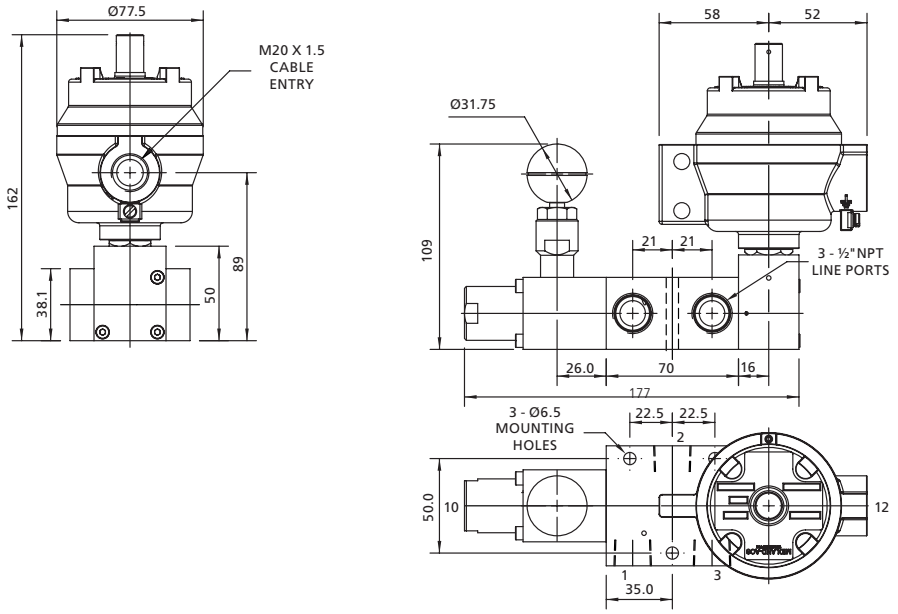

5/2 Function

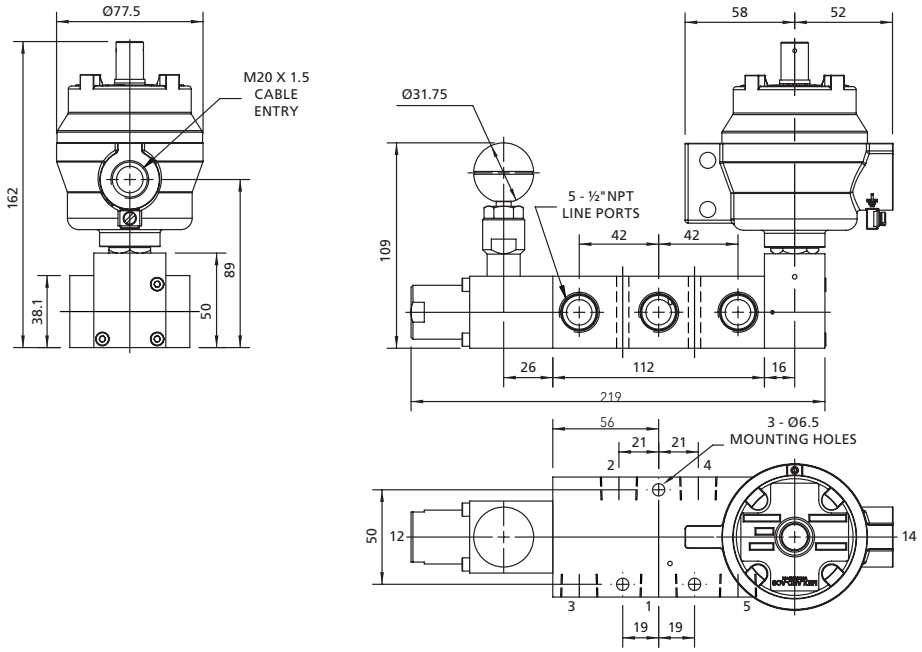

Ordering Information

Product Code	Low Temperature Version	Function	Min Working Pressure	Weight (kg)	CV	Symbol	Product
4326M232VS2B*#	4326M232ES2B*#	3/2	3 Bar	2.10 + Solenoid	3.5	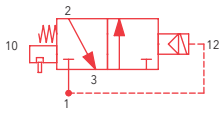	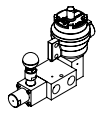
4526M232VS2B*#	4526M232ES2B*#	5/2	3 Bar	2.70 + Solenoid	3.5	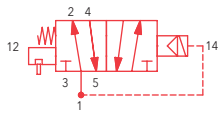	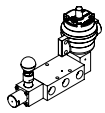

* Denotes solenoid type. See page 61-62; # Denotes Voltage. See page 61

3/2 Function

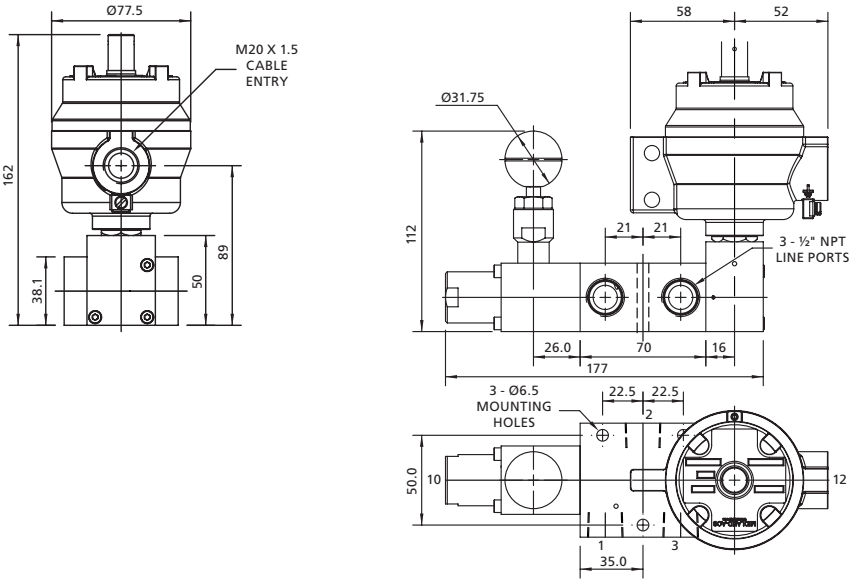

5/2 Function

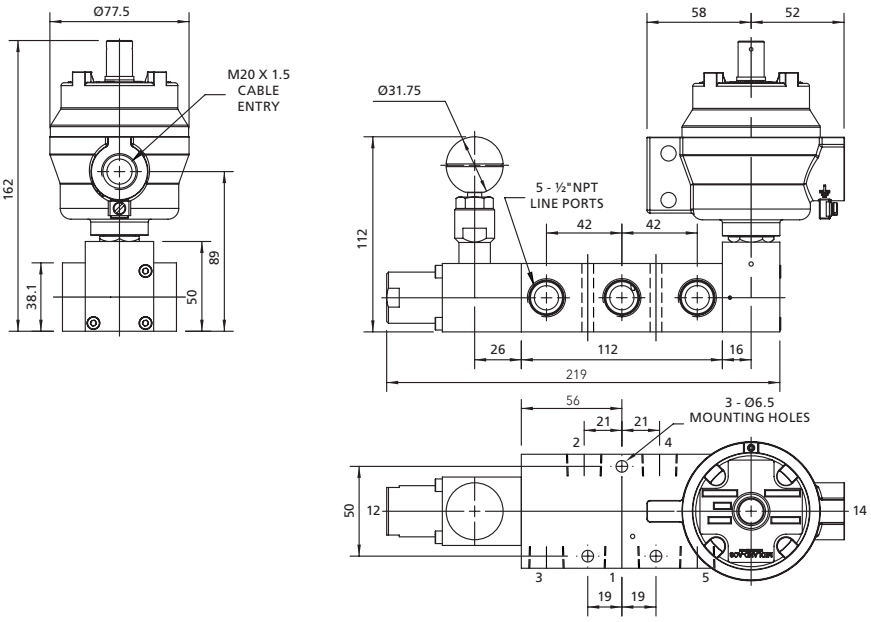

Ordering Information

Product Code	Low Temperature Version	Function	Min Working Pressure	Weight (kg)	CV	Symbol	Product
4326M238VS2B*#	4326M238ES2B*#	3/2	3 Bar	2.10 + Solenoid	3.5	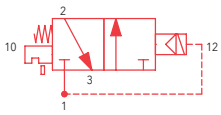	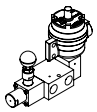
4526M238VS2B*#	4526M238ES2B*#	5/2	3 Bar	2.70 + Solenoid	3.5	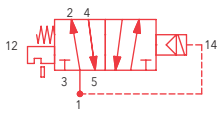	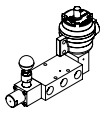

* Denotes solenoid type. See page 61-62; # Denotes Voltage. See page 61

A range of 3/2 and 5/2 pilot operated spool valves in stainless steel for use on gases.

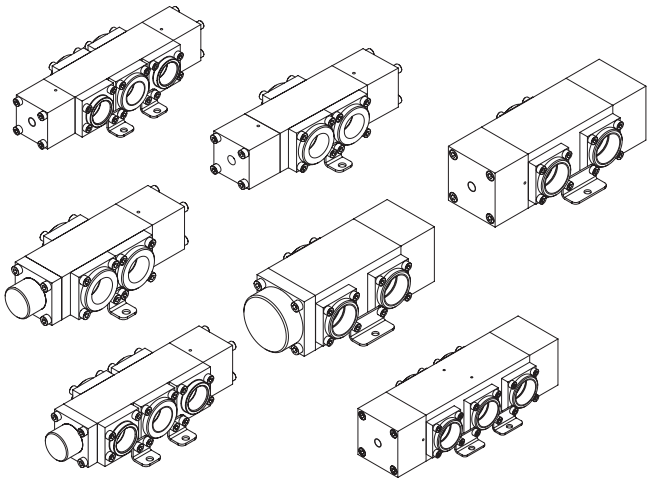

Features and Benefits

- Specifically designed for severe environments
- 3/2 and 5/2 versions
- 316L stainless steel construction
- Designed for actuator control
- NACE option available

Media & Ambient Temperature Range

- -20 to + 180 °C (-4 to +356 °F)
- Low temperature version
  -50 to +90 °C (-58 to +248 °F)

Working Pressure

- 12 bar (174 psi) maximum

Ports NPT (BSP Option Available)

- ¾″ & 1″ NPT line port
- ⅛″ NPT pilot ports

Operating Media

- Gases - filtered lubricated or non-lubricated
- Air, inert gas, sweet (natural) gases
- Sour gas option available

Note: To prevent freezing of the condensate within the product, the media dew point must be at least 10 °C below the lowest ambient temperature the product will be exposed to.

Construction Materials

- Body: 316L stainless steel
- Spool: 316 stainless steel
- Spring: 316 stainless steel
- Seals: Fluoroelastomer[1]

[1] The use of lubrication upstream of the product is not recommended for low temperature applications.

Maximum Flow

At 6 bar, 1 bar differential:

- ¾″ valves - 9,000 l/min (318 SCFM)
- 1″ valves - 13,500 l/min (477 SCFM)

Certification Options Available

CE Ex ATEX

3/2 Function

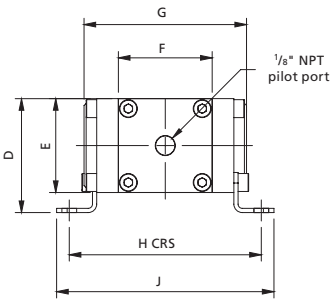

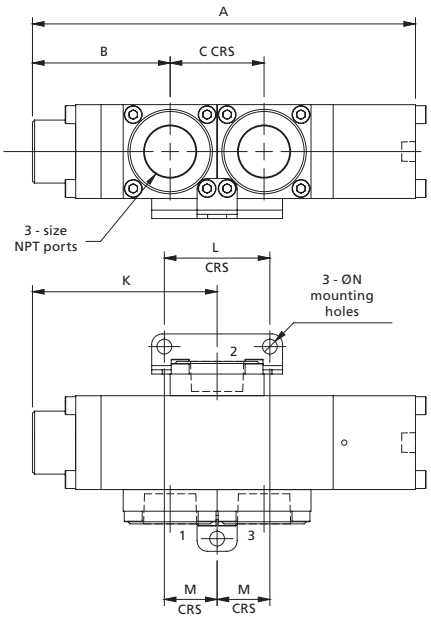

Size	A	B	C	D	E	F	G	H	J	K	L	M	N
¾″	181.5	65.3	44.5	54	44.5	44.5	77	91	103	87.5	50	25	7
1″	196	58.5	70	63.5	63.5	63.5	96	110	122	93.5	50	35	7

5/2 Function

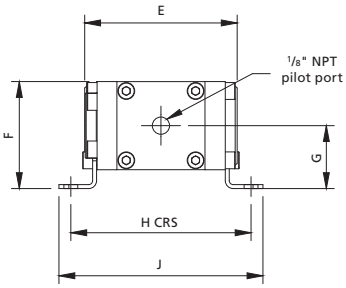

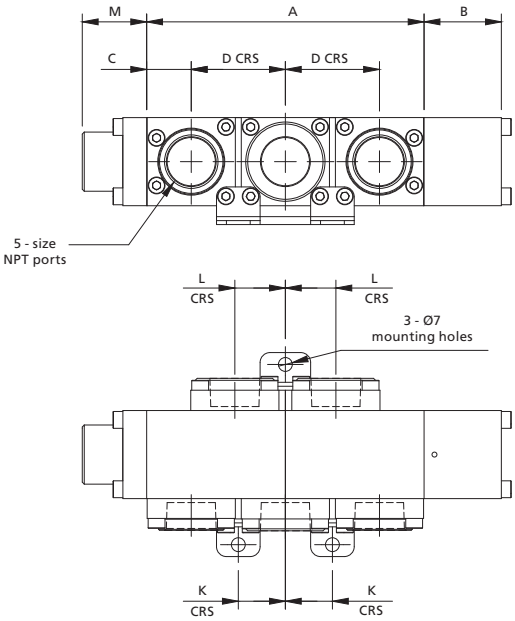

Size	A	B	C	D	E	F	G	H	J	K	L	M
¾″	140	39	22.5	47.5	77	54	31.75	91	103	23.75	25.5	32.5
1″	165	45	22.5	60	96	63.5	31.75	104	116	30	30	36

Ordering Information

Product Code	Low Temperature Version	Function	Size	Weight (kg)	CV	Symbol	Product
6326M21-VS2B	6326M21-ES2B	3/2	¾″	2.5	9.0	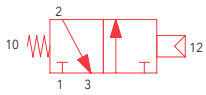	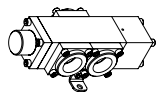
8326M21-VS2B	8326M21-ES2B	3/2	1″	5.3	13.5		
6526M21-VS2B	6526M21-ES2B	5/2	¾″	3.2	9.0	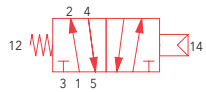	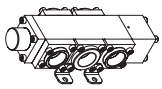
8526M21-VS2B	8526M21-ES2B	5/2	1″	7.5	13.5		

3/2 Function

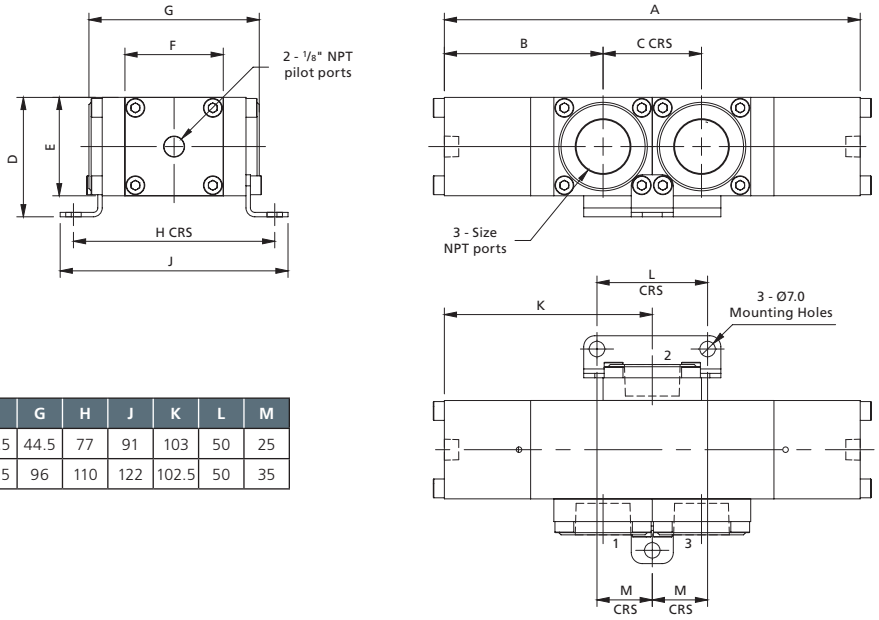

Size	A	B	C	D	E	F	G	H	J	K	L	M
¾″	188	71.75	44.5	54	44.5	44.5	44.5	77	91	103	50	25
1″	205	67.5	73	63.5	63.5	63.5	96	110	122	102.5	50	35

5/2 Function

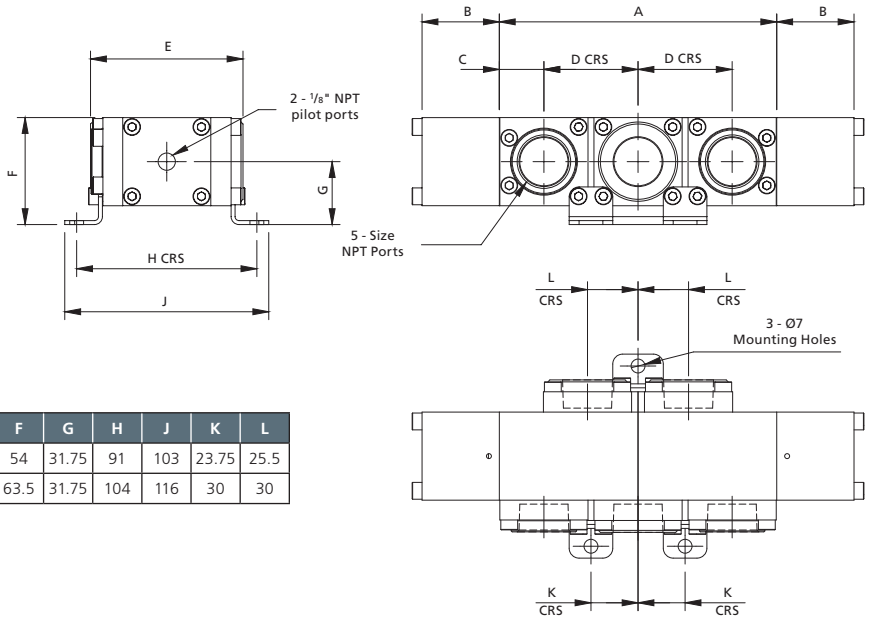

Size	A	B	C	D	E	F	G	H	J	K	L
¾″	140	45	22.5	47.5	77	54	31.75	91	103	23.75	25.5
1″	165	45	22.5	60	96	63.5	31.75	104	116	30	30

Ordering Information

Product Code	Low Temperature Version	Function	Size	Weight (kg)	CV	Symbol	Product
6326B11-VS2B	6326B11-ES2B	3/2	¾″	2.5	9.0	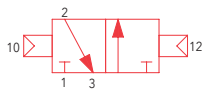	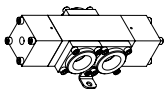
8326B11-VS2B	8326B11-ES2B	3/2	1″	5.4	13.5		
6526B11-VS2B	6526B11-ES2B	5/2	¾″	3.4	9.0	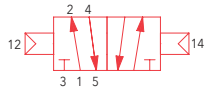	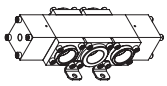
8526B11-VS2B	8526B11-ES2B	5/2	1″	7.5	13.5		

A 3/2 manually operated spool valve in stainless steel for use on gases.

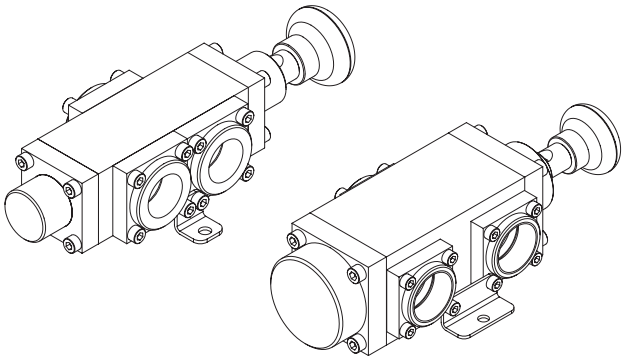

Features and Benefits

- Specifically designed for severe environments
- 316L stainless steel construction
- Designed for actuator control
- NACE option available

Media & Ambient Temperature Range

- -20 to + 180 °C (-4 to +356 °F)
- Low temperature version
  -50 to +90 °C (-58 to +248 °F)

Working Pressure

- 12 bar (174 psi) maximum

Ports NPT (BSP Option Available)

- ¾″ & 1″ NPT line port
- ⅛″ NPT pilot ports

Operating Media

- Gases - filtered lubricated or non-lubricated
- Air, inert gas, sweet (natural) gases
- Sour gas option available

Note: To prevent freezing of the condensate within the product, the media dew point must be at least 10 °C below the lowest ambient temperature the product will be exposed to.

Construction Materials

- Body: 316L stainless steel
- Spool: 316 stainless steel
- Spring: 316 stainless steel
- Seals: Fluoroelastomer[1]

[1] The use of lubrication upstream of the product is not recommended for low temperature applications.

Maximum Flow

At 6 bar, 1 bar differential:

- ¾″ valves - 9,000 L/Min (318 SCFM)
- 1″ valves - 13,500 L/Min (477 SCFM)

Certification Options Available

CE Ex ATEX

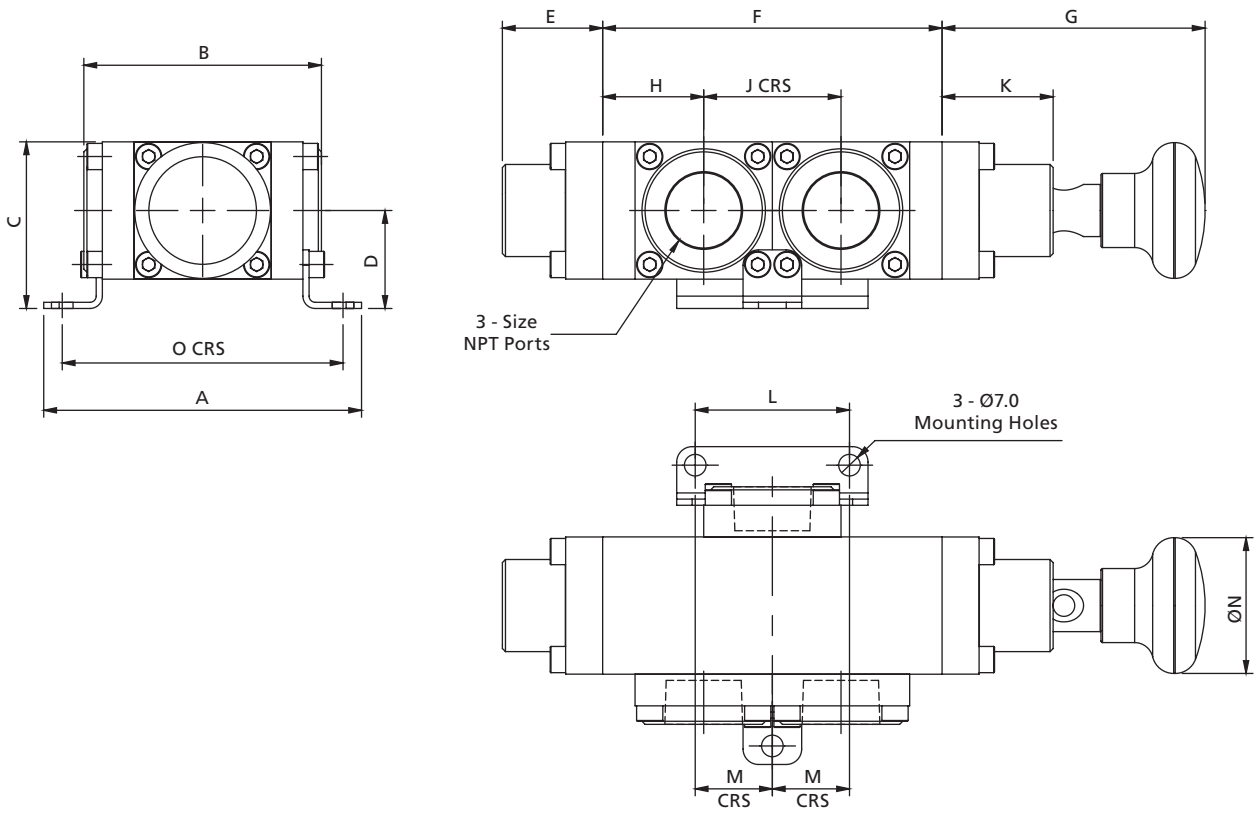

Size	A	B	C	D	E	F	G	H	J	K	L	M	N	O
¾″	103	77	54	31.75	32.5	110	85.25	32.8	44.5	36	50	25	44	91
1″	122	96	63.5	31.75	36	115	96.5	22.5	70	43	50	25	44	110

Ordering Information

Product Code	Low Temperature Version	Size	Weight (kg)	CV	Symbol	Product
6326M27-VS2B	6326M27-ES2B	¾″	2.4	9.0	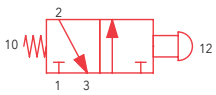	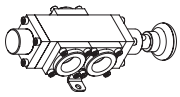
8326M27-VS2B	8326M27-ES2B	1″	4.8	13.5		

A range of 3/2 and 5/2 solenoid operated spool valves in stainless steel for use on gases.

Features and Benefits

- Specifically designed for severe environments
- 3/2 and 5/2 versions
- 316L stainless steel construction
- Designed for actuator control
- NACE option available

Media & Ambient Temperature Range

Please refer to solenoid selection chart on page 62.

Working Pressure

- 12 bar (174 psi) maximum

Ports NPT (BSP Option Available)

- ¾″ & 1″ NPT line port
- ⅛″ NPT pilot ports

Operating Media

- Gases - filtered lubricated or non-lubricated
- Air, inert gas, sweet (natural) gases
- Sour gas option available

Note: To prevent freezing of the condensate within the product, the media dew point must be at least 10 °C below the lowest ambient temperature the product will be exposed to.

K-TYPE solenoid shown -
See Solenoid Specification Chart

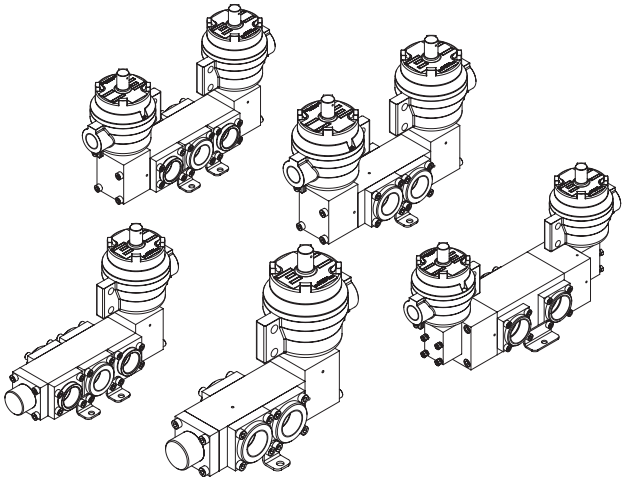

Construction Materials

- Body: 316L stainless steel
- Spool: 316 stainless steel
- Spring: 316 stainless steel
- Seals: Fluoroelastomer[1]

[1] The use of lubrication upstream of the product is not recommended for low temperature applications.

Maximum Flow

At 6 bar, 1 bar differential:

- ¾″ valves - 9,000 L/Min (318 SCFM)
- 1″ valves - 13,500 L/Min (477 SCFM)

Certification Options Available

3/2 Function

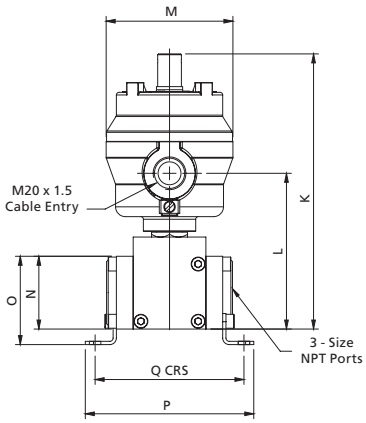

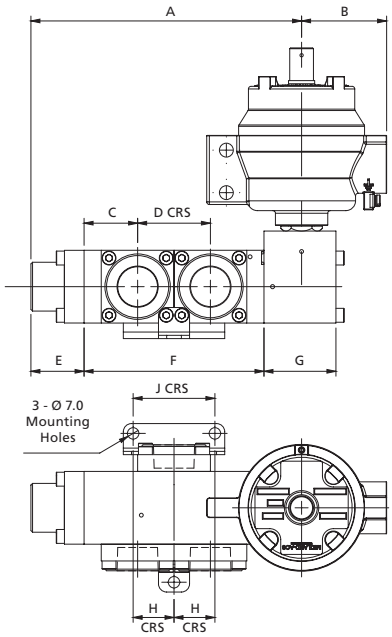

Size	A	B	C	D	E	F	G	H	J	K	L	M	N	O	P	Q
¾″	165.5	52	32.75	44.5	32.5	110	44	25	50	168.2	95.2	77.5	44.5	54	103	91
1″	211.9	52	22.5	70	36	115	76.75	25	50	168.2	95.2	77.5	63.5	63.5	122	110

5/2 Function

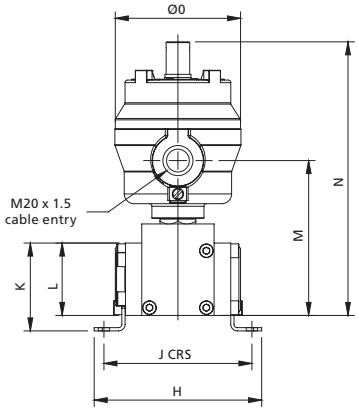

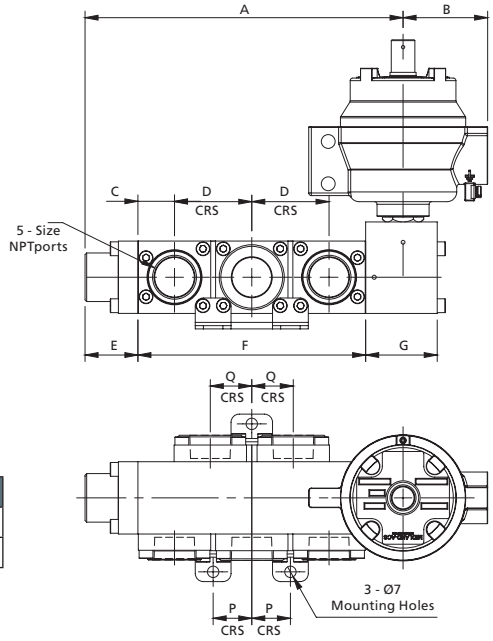

Size	A	B	C	D	E	F	G	H	J	K	L	M	N	O	P	Q
¾″	195.5	52	22.5	47.5	32.5	140	44	103	91	54	44.5	95.2	168.2	77	23.75	25.5
1″	262	52	22.5	60	36	165	76.75	116	104	63.5	63.5	102.7	175.7	77	30	30

Ordering Information

Product Code	Low Temperature Version	Function	Size	Weight (kg)	CV	Symbol	Product
6326M23-VS2B*#	6326M23-ES2B*#	3/2	¾″	4.2	9.0	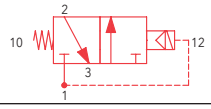	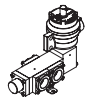
8326M23-VS2B*#	8326M23-ES2B*#	3/2	1″	7.1	13.5		
6526M23-VS2B*#	6526M23-ES2B*#	5/2	¾″	5.0	9.0	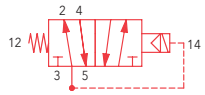	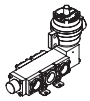
8526M23-VS2B*#	8526M23-ES2B*#	5/2	1″	8.6	13.5		

* Denotes solenoid type. See page 61-62; # Denotes Voltage. See page 61

3/2 Function

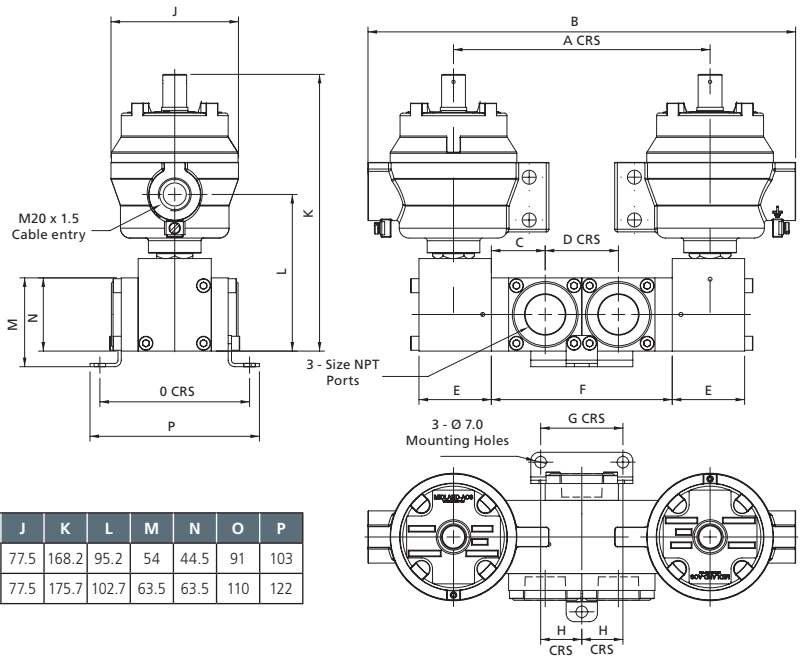

Size	A	B	C	D	E	F	G	H	J	K	L	M	N	O	P
¾″	156	260	32.75	44.5	44	110	50	25	77.5	168.2	95.2	54	44.5	91	103
1″	236.8	340.5	67.5	70	76.8	115	50	25	77.5	175.7	102.7	63.5	63.5	110	122

5/2 Function

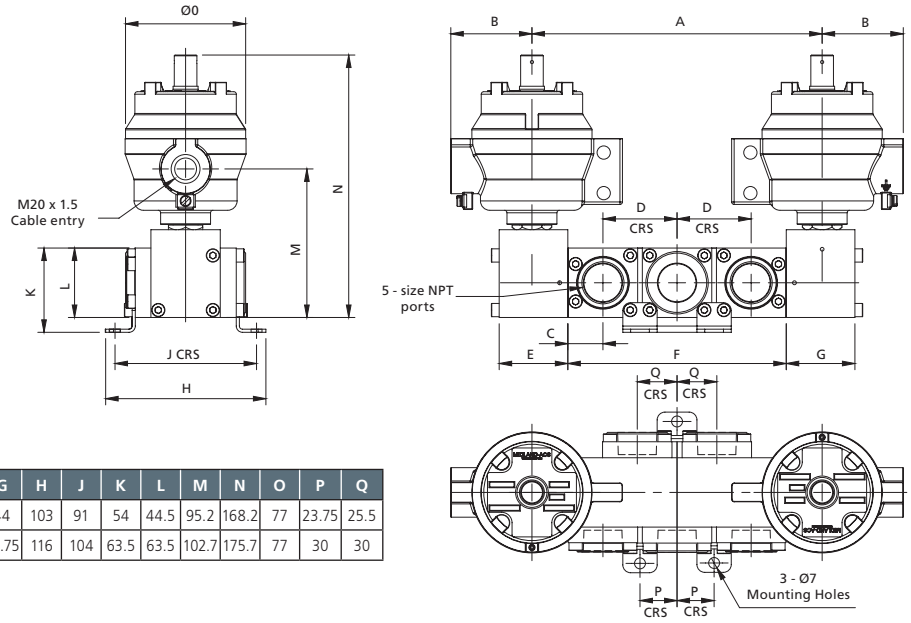

Size	A	B	C	D	E	F	G	H	J	K	L	M	N	O	P	Q
¾″	186	52	22.5	47.5	74	140	44	103	91	54	44.5	95.2	168.2	77	23.75	25.5
1″	286.75	52	22.5	60	76.75	165	76.75	116	104	63.5	63.5	102.7	175.7	77	30	30

Ordering Information

Product Code	Low Temperature Version	Function	Size	Weight (kg)	CV	Symbol	Product
6326B33-VS2B*#	6326B33-ES2B*#	3/2	¾″	6.2	9.0	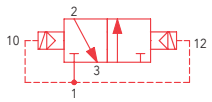	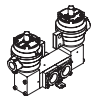
8326B33-VS2B*#	8326B33-ES2B*#	3/2	1″	9.2	13.5		
6526B33-VS2B*#	6526B33-ES2B*#	5/2	¾″	7.0	9.0	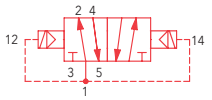	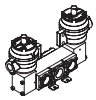
8526B33-VS2B*#	8526B33-ES2B*#	5/2	1″	10.8	13.85		

* Denotes solenoid type. See page 61-62; # Denotes Voltage. See page 61

Solenoid Code K&7

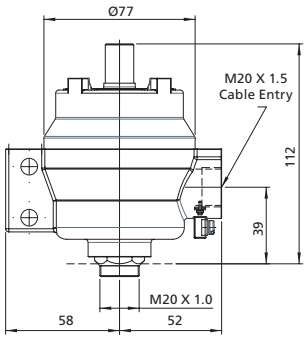

Solenoid Code CL

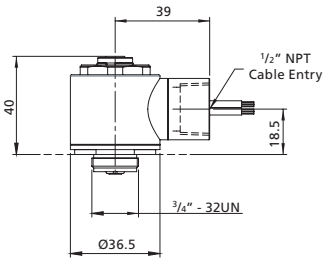

Solenoid Code P&T

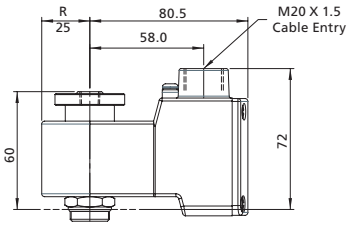

Solenoid Code 4

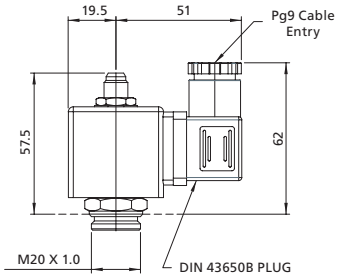

Voltages

Code	Voltage
C	12 VDC
D	24 VDC
F	48 VDC
M	110 VAC 50/60 Hz
S	220 VAC 50 Hz
Y	28 VDC

Solenoid specifications

Model Code	K	7	CL	P	T	4
Type of Protection	Exd IIC T6	Exd IIC T4	NEMA 7 & 9	Eex me II T4/T5	Eex ia IIC T6	Non-hazardous
Approved Area	Zones 1 and 2	Zones 1 and 2	Class I, Div 1, Group C & D. Class II, Div 1, Groups E, F, & G. Class II, Div 2, Groups C, D, E, F & G	Zones 1 and 2	Zones 0	None
Degree of Protection	IP67 (NEMA Equivalent: 6)	IP67 (NEMA Equivalent: 6)	NEMA 4 (IP55)	IP66 (NEMA Equivalent: 4X)	IP66 (NEMA Equivalent: 4X)	IP65 (NEMA Equivalent: 4)
Housing	316 Stainless Steel alt Aluminium Epoxy coated	316 Stainless Steel alt Aluminium Epoxy coated	Stainless Steel. Coil potted	Glass reinforced Polyamid (Stainless Steel conduit hub)	Glass reinforced Polyamid	Moulded plastic
Cable Entry	M20 x 1.5 (Optional ½" NPT consult factory for code)	M20 x 1.5 (Optional ½" NPT consult factory for code)	½" NPT or 24" flying lead	M20 x 1.5	M20 x 1.5	DIN plug
Power Consumption AC/DC	5W 22.4 VA (110 VAC) 23.4 VA (120 VAC)	5 W 22.4 VA (110 VAC) 23.4 VA (120 VAC)	1.8 W / 1.8 W	7.5 W (DC)	2.3 W (24 VDC)	9 W (DC) 9 W (Inrush 32 VA) (AC)
Maximum Admissable Surface Temp	85 °C (185 °F)	135 °C (275 °F)	160 °C (320 °F)	T4 135 °C (275 °F) T5 100 °C (212 °F)	85 °C (185 °F)	N/A
Maximum Ambient Temperature	40 °C (104 °F)	80 °C (176 °F)	40 °C (104 °F)	T4 75 °C (167 °F) T5 40 °C (104 °F)	65 °C (149 °F)	50 °C (122 °F)
Maximum Fluid Temperature	40 °C (104 °F)	80 °C (176 °F)	105 °C (221 °F)	T4 75 °C (167 °F) T5 40 °C (104 °F)	75 °C (167 °F)	75 °C (167 °F)
Solenoid Weight (kg)	1.62	1.62	0.29	0.63	0.53	0.20
Approved Standard	ATEX, CSA, UL, IECEX	ATEX, CSA, UL, IECEX	UL Listed / CSA Certified	ATEX, IECEX	ATEX, IECEX	

NOTE: 'T' type solenoid only available with 28 VDC coil (Y).

Notes

Notes

Authorized Distributor
MONILEK OILFIELD

MONILEK
OILFIELD

E: sales@monilek.com
W: www.monilekgroup.com

MIDLAND
FLOW LIMITED

Midland Flow is a leading manufacturer of pneumatic and hydraulic instrumentation, supporting the oil and gas, chemical processing, rail, hydrogen, water and power industries.

Midland Flow Ltd.
Patrick Gregory Road
Wolverhampton
WV11 3DZ, UK

+44 (0)1902 305 678

sales@midlandflow.com

MFP-002-00-1