Purge Adapters

The Solution to Isolate the Process

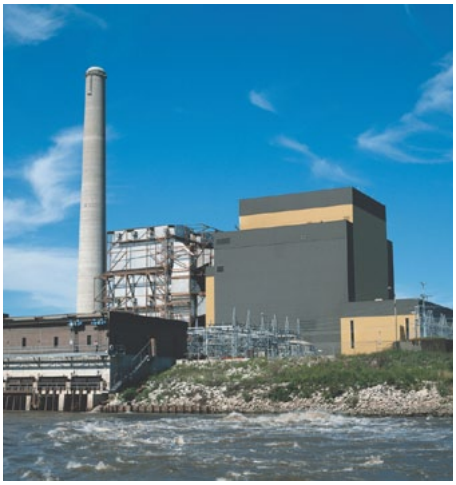

Flow, Level and Pressure Applications:

Parker's Purge Adapters are used where the sensing lines need a constant purge to prevent plugging, and where the process needs to be isolated from the manifold, measuring instruments and connecting tubing.

The compact Purge Adapter assemblies replace many threaded connections, tube fittings, individual valves and rotometers. The established problem of operators adjusting flow on the purge rotometers, which affects the accuracy of the process measurement, is eliminated with the accurate and cost-effective Purge Adapter.

Contact Information:

Parker Hannifin Corporation
PGI Division
16101 Vallen Drive
Houston, TX 77041 USA

phone 713 466 0056
fax 800 568 9228
pgi_sales@parker.com

www.pgiint.com
www.parker.com

Product Features:

- Used to isolate process from manifold, measuring instruments, and connecting tubing
- Eliminates many threaded connections, tube fittings, individual valves, and rotometers
- Fixed constant purge for gases or liquids
- Variety of flow rates available
- Built-in test valves and filter element
- Built-in by-pass valves to by-pass purge metering elements to allow for high flow purge into the process
- Optional check valves to prevent back flow of process

Authorized Distributor
MONILEK OILFIELD

E: sales@monilek.com
W: www.monilekgroup.com

ENGINEERING YOUR SUCCESS.

Flow & Level Purge Adapter

Gauges not included. 1/4" NPT gauge ports.

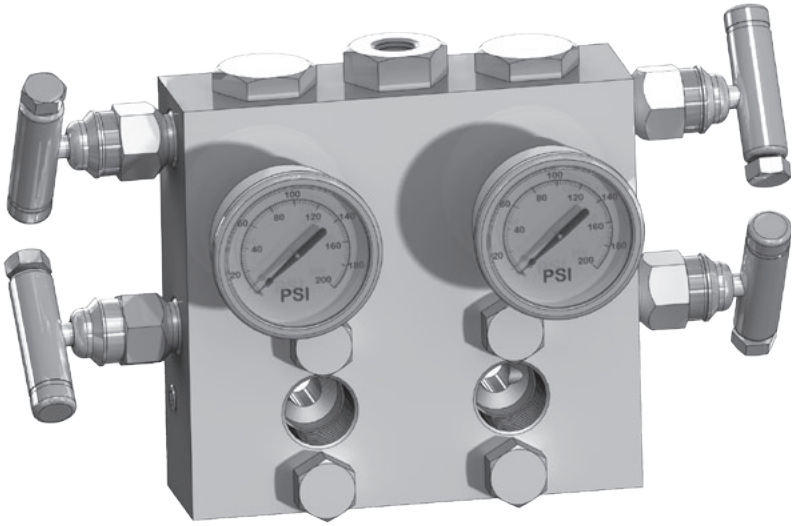

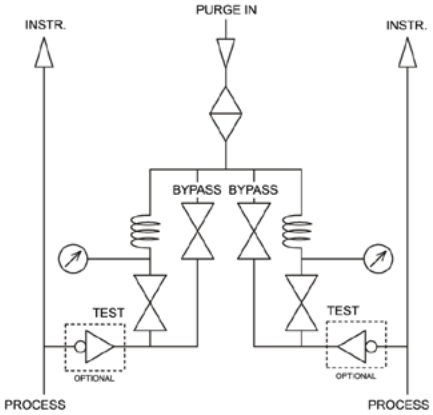

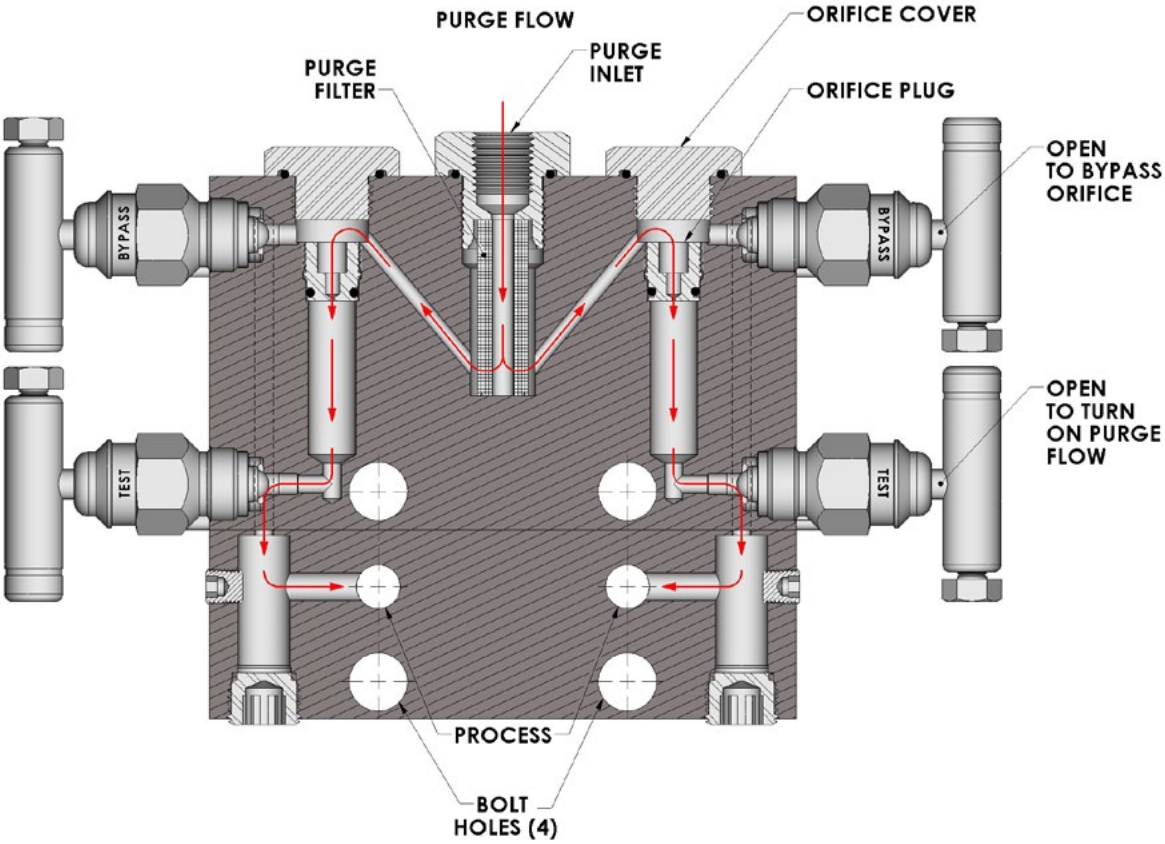

Purge Adapter Applications

Liquid Flow Application

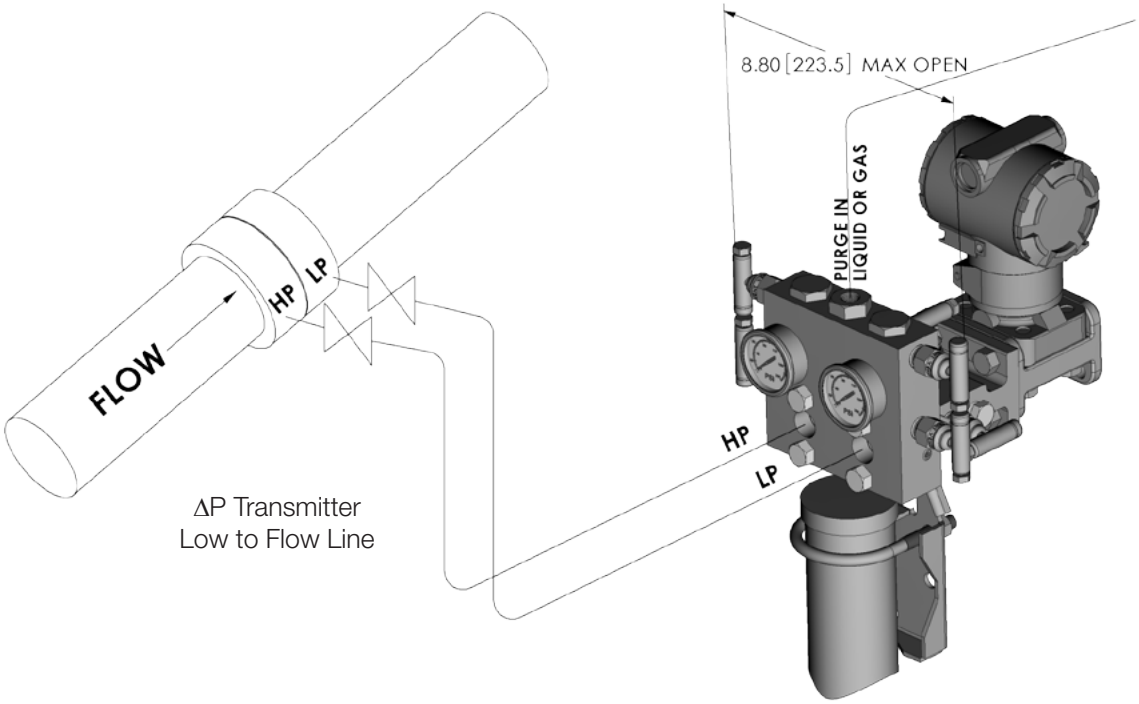

Liquid Level Application

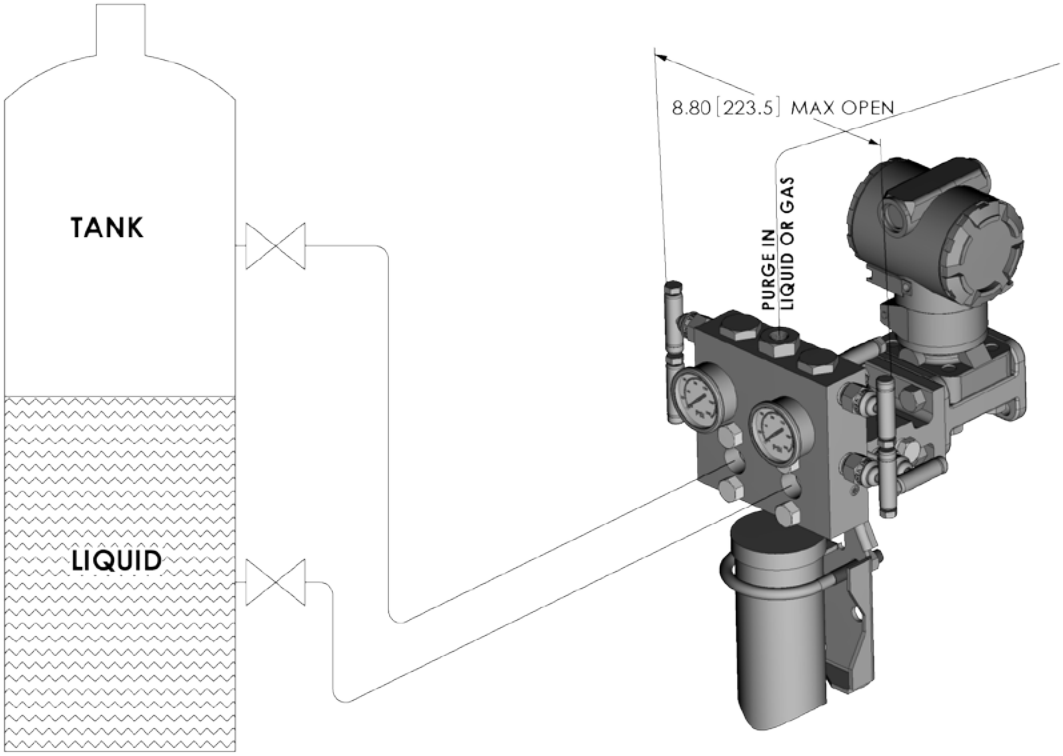

Gauge Pressure Purge Adapter

Gauges not included. 1/4" NPT gauge ports.

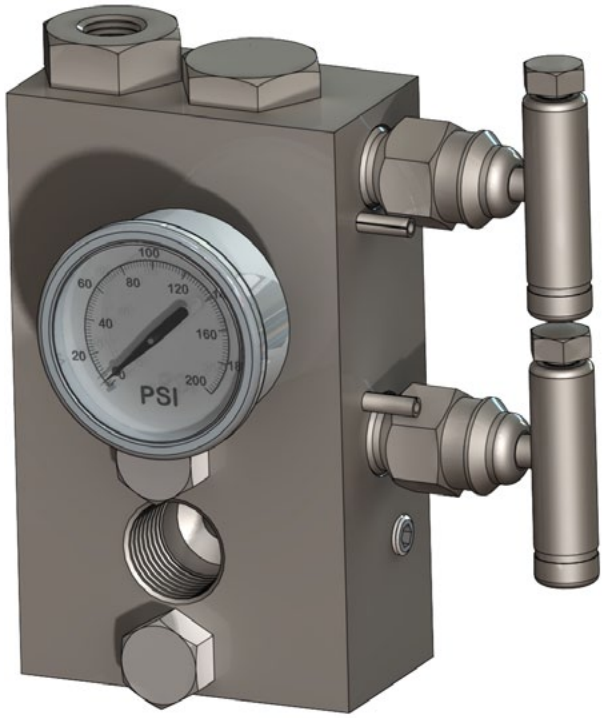

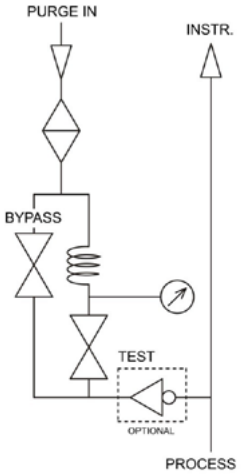

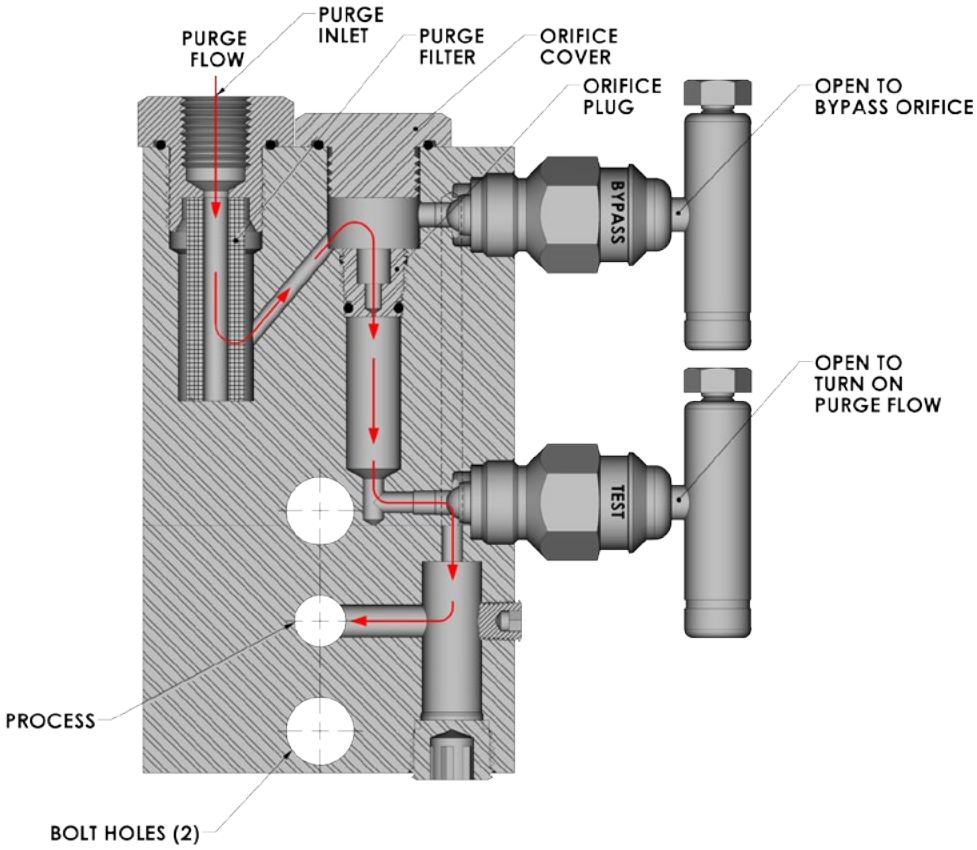

Purge Adapter Applications

Liquid Pressure Application

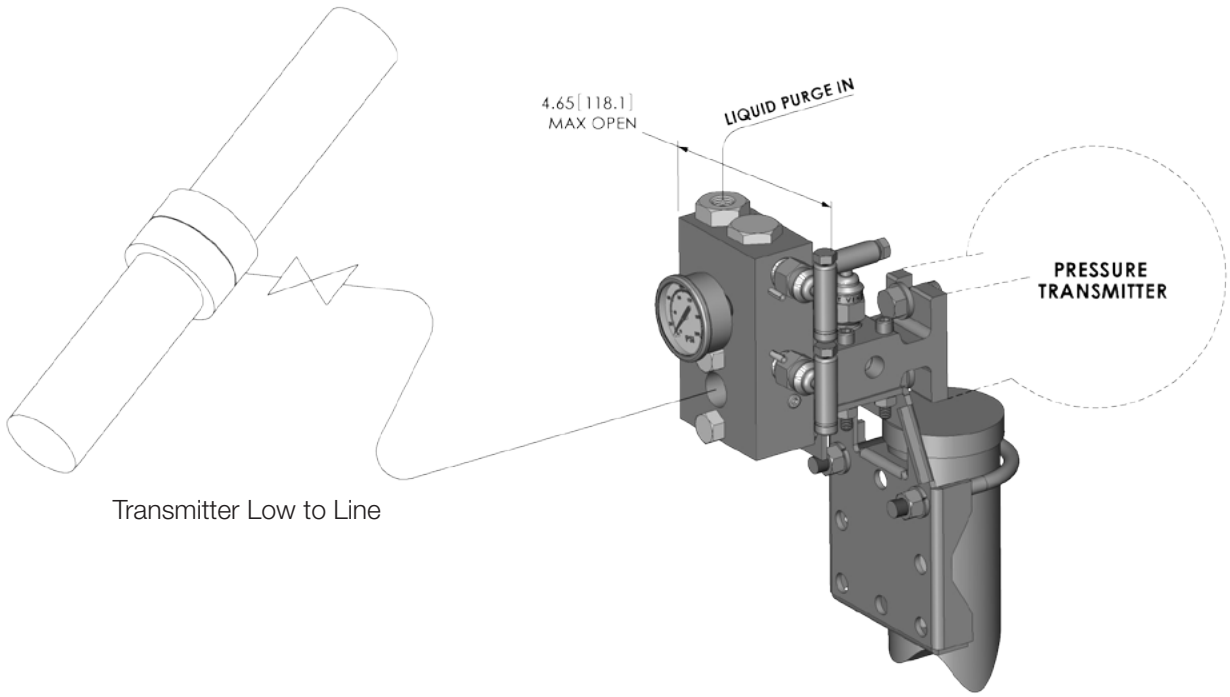

Transmitter Low to Line

Purge Adapter Assemblies

Purge adapters, manifold, and bracket assemblies are available.

Three-Valve Flow & Level Manifold Assembly AK-084SCT & AK-086SCT

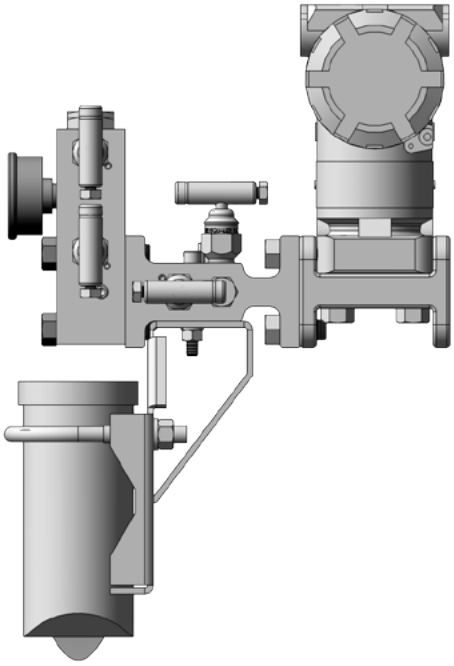

Assembly consists of:

- Two Element Purge Adapter AK-062SCT
- Choose either a Hard Seat Three-Valve Manifold M-750SCT (AK-084SCT) or a Soft Seat Three-Valve Manifold M-751SDT (AK-086SCT)
- Mounting Bracket for 2" Pipe

Two-Valve Gauge Pressure Manifold Assembly AK-088SCT & AK-087SCT

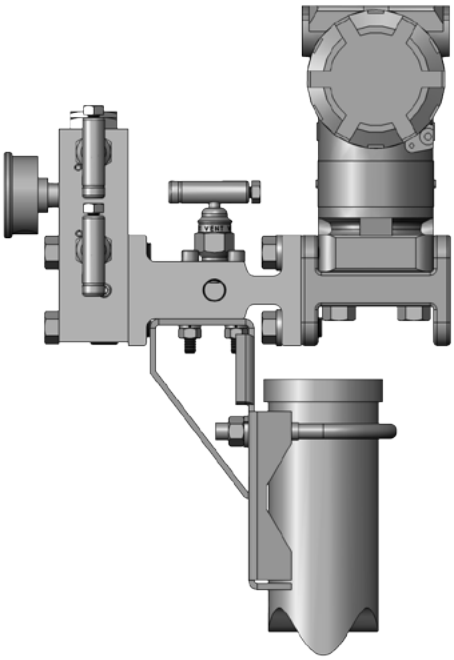

Assembly consists of:

- One Element Purge Adapter AK-064SCT
- Choose either a Hard Seat Two-Valve Manifold M-716SCT (AK-088SCT) or a Soft Seat Two-Valve Manifold M-715SDT (AK-087SCT)
- Mounting Bracket for 2" Pipe

Purge Adapter Specifications

Body Style	Body Code	Seat Code	Stem Seal Code		Option Codes						Description
Hard Seat											
AK-062				—							Differential pressure purge adapter only
AK-064				—							Static pressure purge adapter only
AK-084				—							Differential pressure purge adapter, M-750SCT three-valve manifold and mounting bracket assembly
AK-088				—							Static pressure purge adapter, M-716SCT two-valve manifold and mounting bracket assembly

Body Code	
S	316 SS [Std]

Hard Seat Code	
C	Carbide ball [Std]
R	Ceramic ball
6	316 SS ball
N	K-Monel® ball
H	Hastelloy-C® ball

Stem Seal Code	
T	PTFE Pressure-Core® [Std]
G	Grafoil® packed
V	Viton® O-ring
J	Low-temp Pressure-Core®

Options	
C3	EPDM O-rings
CD	Non-adjustable check valve(s)
CF	0.2 SCFH capillary assembly
CK	0.4 SCFH / 0.3 GPH capillary assembly
CHXXX	Orifice assembly XXX = Orifice size (Choose orifice size from chart below)
CJ	60 micron filter, sintered 316 SS

Materials of Construction

Part	Material
Body	ASTM A479-316
Bonnet	ASTM A479-316
Stem	ASTM A479-316
Seal Retainer	ASTM A479-316
Handle Assembly	ASTM A582 (18-8)
Pipe Plugs	ASTM A182-F (18-8)
Caps / Plugs	ASTM A479-316
Capillary Assembly	300 Series SS
Check Valve Assembly	300 Series SS (optional)
Filter	5 micron Phenolic Impregnated Rayon
O-Ring Seals	Viton®

Metering Element Flow Rate Data

Orifice Flow Rates		
Orifice Size	**SCFH @ 10 PSI Air**	**GPH @ 25 PSI H_2O**
.012"		1
.016"	4	2
.031"	19	6
.047"	36	16
.063"	55	28
.078"	85	42
.187"	110	48

Replacement Parts

Part Number	Description
SAK-06X-XXX	Orifice Assembly Replacement Kit: Two Capillary / Orifice Plugs with Viton® O-rings, plus Capillary / Orifice Cover Viton® O-ring
NOTE: XXX = Capillary Option Code or Orifice Size (i.e., SAK-06X-CF for Capillary, or SAK-06X-016 for Orifice)	
P5-088-R1	Cap Viton® O-ring
P5-015-R5	Capillary / Orifice Viton® O-ring
P7-108-R0	5 micron Phenolic Impregnated Rayon Filter [Std]
P7-181-C0	60 micron filter, sintered 316 SS (CJ option)
Call factory for individual Capillary or Orifice Meter Element replacement	

Pressure & Temperature

Body Material	Hard Seat PTFE Pressure-Core® or Grafoil®
316 SS	6,000 PSI @ 400°F

Sales Offices Worldwide

Parker Hannifin Corporation
PGI Division
16101 Vallen Drive
Houston, TX 77041
USA
phone 713 466 0056
fax 713 744 9897
email pgi_sales@parker.com
www.pgiint.com
www.parker.com

Parker Hannifin Corporation
PGI Division
18 Huashan Road, New District
Changzhou, Jiangsu
213022
China
phone +86 519 8980 7258
fax +86 519 8980 7212

Parker Hannifin Corporation
PGI Division
11, Fourth Chin Bee Rd
619702
Singapore
phone +65 6887 6300
fax +65 6265 5125

Parker Hannifin Corporation
PGI Division
2620 21st Street NE
Calgary, Alberta
T2E 7L3
Canada
phone 403 291 3154
fax 403 291 3292

Safety Guide – See www.parker.com/safety.

© 2014 Parker Hannifin Corporation

PGI-PA Mar 2014

Parker Hannifin Corporation
PGI Division
16101 Vallen Drive
Houston, Texas 77041
phone 713 466 0056
fax 713 744 9897
www.pgiint.com

Authorized Distributor
MONILEK OILFIELD
E: sales@monilek.com
W: www.monilekgroup.com