Poppet Valves

1750 Series

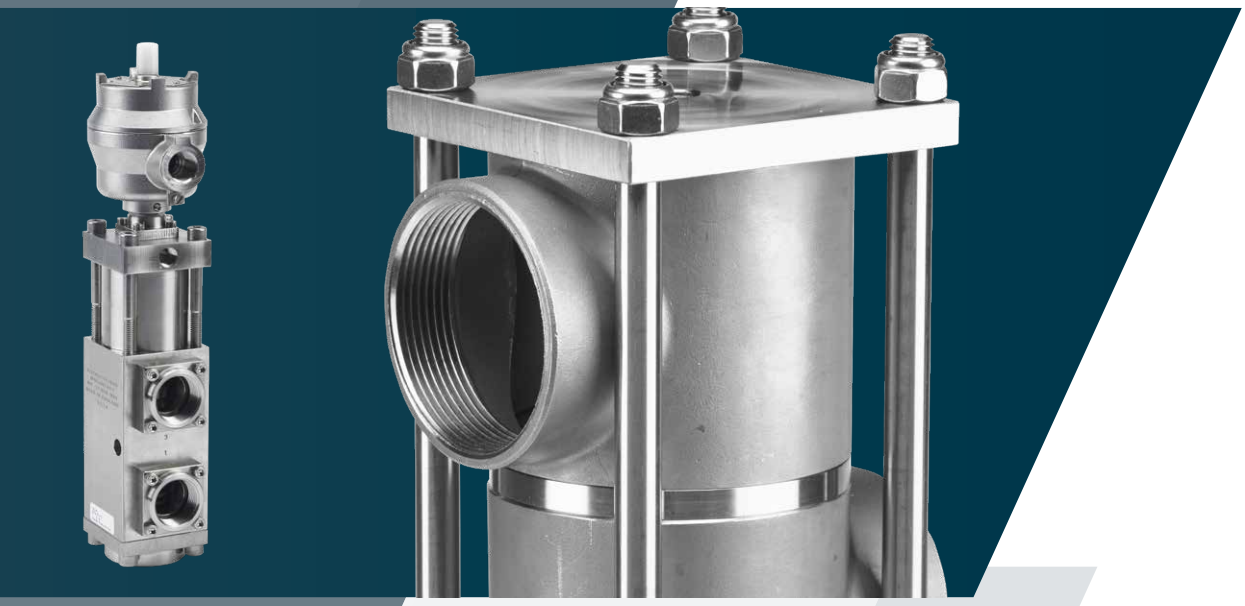

Authorized Distributor
MONILEK OILFIELD

MONILEK
OILFIELD

E: sales@monilek.com
W: www.monilekgroup.com

MIDLAND
FLOW LIMITED

Delivering precision flow control instrumentation for more than 60 years

Contents

Section	Page
Introduction	**3**
1750 Series poppet valves	**4**
Pilot operated	4
¼" to ½" Pilot operated	5
¾" to 2" Pilot operated	6
3" Pilot operated	7
¼" to ½" Pilot solenoid operated	8
¼" to ½" Pilot solenoid operated	9
¾" to 3" Pilot solenoid operated	10
¾" to 3" Pilot solenoid operated	11
Solenoid operators for use with pilot solenoid poppet valves	12
Pilot solenoid operated	13
Plunger or roller lever operated	14
3/2 Plunger operated spring-return	15

Since our founding in 1956, we have been known internationally as one of the oil & gas industries premier designers and manufacturers of 316L stainless steel control equipment. Over the years we have developed an enviable reputation for high quality products, reliability and innovation.

We have the ability to investigate problems and provide comprehensive solutions for the control of hydraulic and pneumatic actuated process control valves across a broad range of industries and markets. This, coupled with repeatedly delivering impressive results worldwide, sets us apart from our competitors.

A range of 3/2 pilot operated poppet valves in stainless steel 316L for use on gases. Specifically designed for harsh environments, designed for actuator control.

Our 1750 series is available in ¼" to 3" NPT port sizes. 316L construction makes this valve range ideal for severe service / hazardous environments.

3/2 function for cylinder or actuator control incorporating:

- Low power consumption
- Low temperature options
- High flow rates
- Relevant industry approvals including SIL
- Sweet (natural) and sour gases as well as low pressure hydraulic, mineral or water
- Hazardous protection concepts

A range of 3/2 pilot operated poppet valves in stainless steel 316L for use on gases.

Features and Benefits

- Specifically designed for severe environments
- 316L stainless steel construction
- Designed for actuator control
- Large flow paths (up to 110 Cv)
- NACE capability option available

Media & Ambient Temperature Range

- 1/4" to 1 1/2"" -20 to +180 °C (-4 to +356 °F)
- 2 & 3" -20 to + 80 °C (-4 to +176 °F)
- Low temperature version (all sizes up to and including 2") -50 to +80 °C (-58 to +176 °F)

Note: When product is ordered as /ATEX ambient temperature is limited to +40 °C (104 °F) Ex II2Gc T6.

Working Pressure

- Up to 12 bar (174 psi) maximum inlet pressure
- Minimum pilot pressure valve size dependent.

Ports NPT (BSP option available)

- 1/4" to 3" NPT
- Pilot ports 1/8" or 1/4" (valve size dependent)

Operating Media

- Gases – filtered lubricated or non lubricated air, inert gas, sweet (natural) and sour gases
- Liquids – low pressure hydraulic, mineral oil or water (please consult factory)

NOTE: To prevent freezing of the condensate within the product, the media dew point must be at least 10 °C below the lowest ambient temperature the product will be exposed to.

Construction Materials

- Body & trim: 316L stainless steel
- Springs: 316 stainless steel
- Seals: 1/4" to 1/2" fluoroelastomer (standard option)
  3/4" to 3" nitrile (standard option)
  1/4" to 3" EPDM[1] (low temperature version)

[1] The use of lubrication upstream of the product is not recommended for low temperature applications.

Drawings and 3D models for all valves and solenoid options available on request

Size	Mass (kg)	Max. Flow L/Min	Max. Flow SCFM	Min. Pilot Pressure	Cv
1/4"	0.65	1216	43	4.0 bar	1.2
3/8"	0.9	1809	64	4.0 bar	1.8
1/2"	1.5	3518	124	4.0 bar	3.5
3/4"	5	8041	284	4.0 bar	8
1"	5	12866	454	4.0 bar	13
1 1/4"	11	17650	624	4.0 bar	18
1 1/2"	11	22767	804	4.0 bar	22
2"	18.7	50861	1797	4.0 bar	50

Maximum flow at 6 bar, with 1 bar differential
Minimum pilot pressure at 6.3 bar body pressure

Certification Options Available

CE ATEX

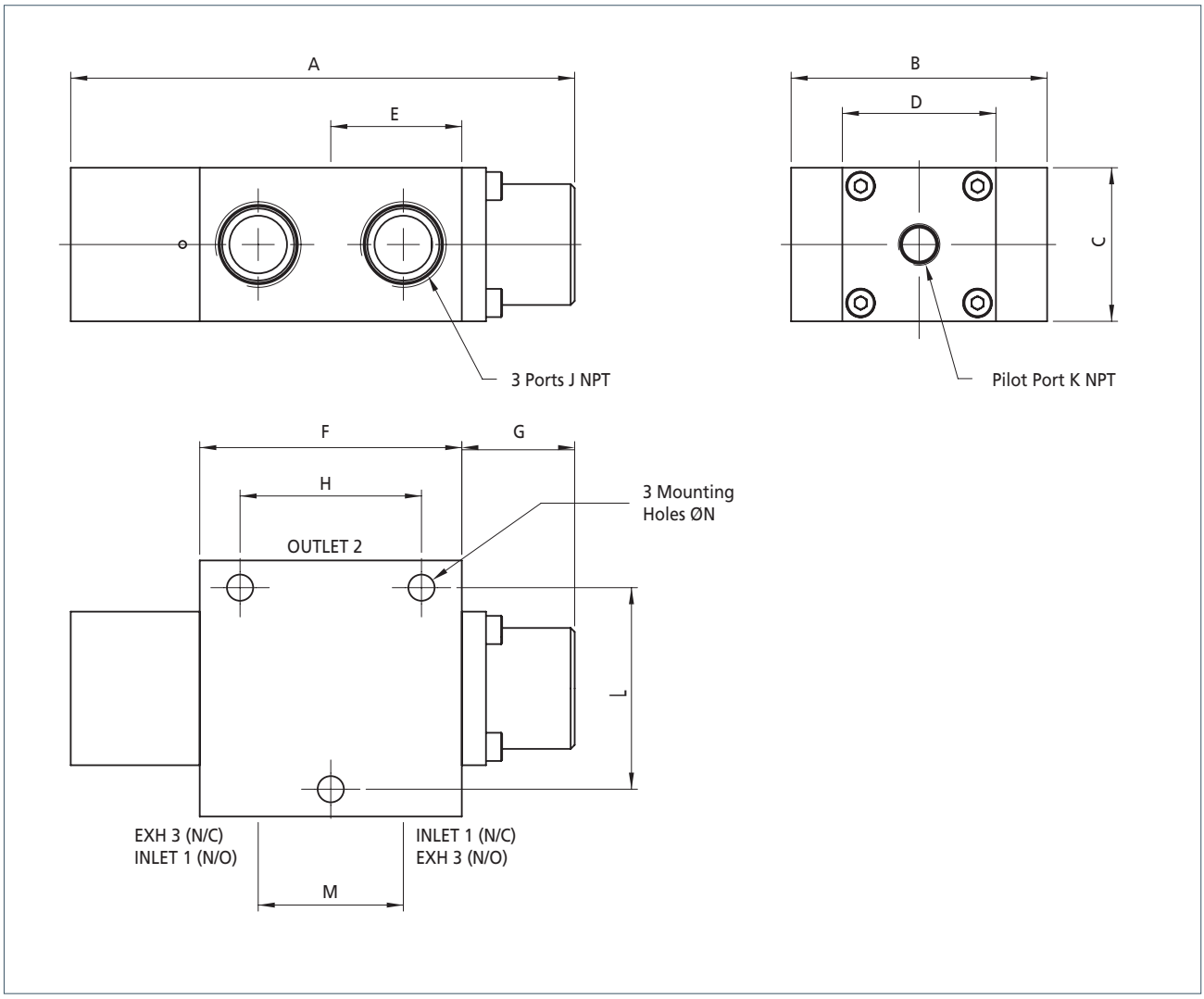

Dimensions (mm)

Size	A	B	C	D	E	F	G	H	J	K	L	M	N
¼″	92	44.5	32	32	27	54	10	26	¼″	⅛″	35	28	5.5
⅜″	92	51	32	32	27	54	10	38	⅜″	⅛″	40	28	6.5
½″	125	63.5	38	38	32.5	65	28	45	½″	⅛″	50	36	6.5

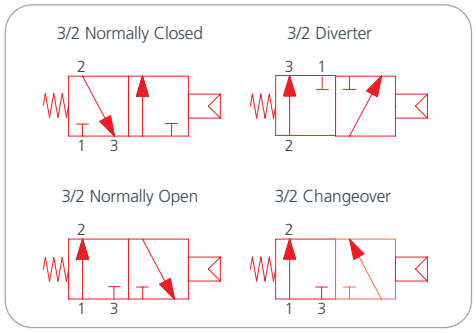

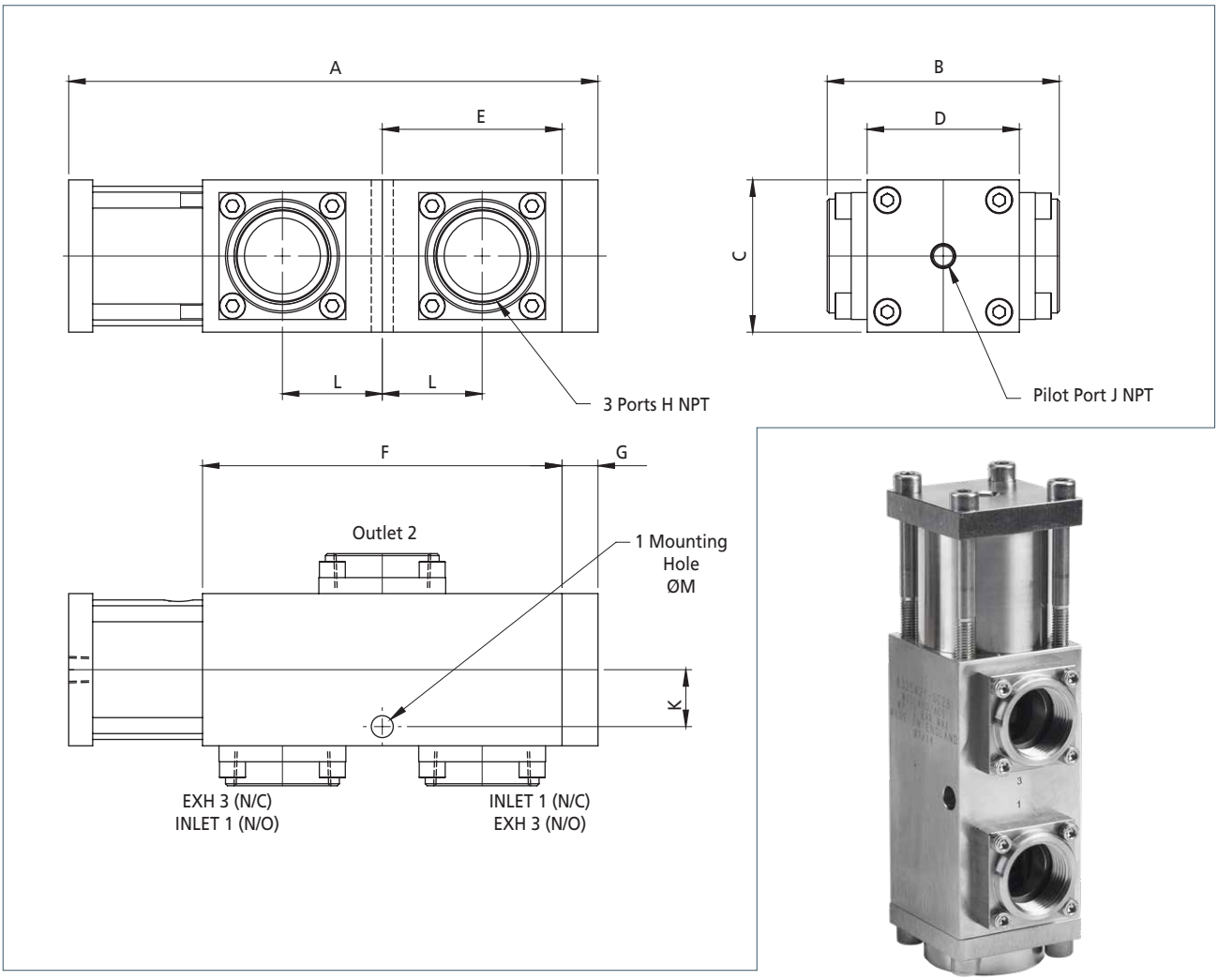

Dimensions (mm)

Size	A	B	C	D	E	F	G	H	J	K	L	M
¾″	202	96	63.5	63.5	53	106	22	¾″	¼″	23	30	11
1″	202	96	63.5	63.5	63	126	22	1″	¼″	23	35	11
1¼″	265	116	76	76	90	180	18	1¼″	¼″	28.5	50	11
1½″	265	116	76	76	90	180	18	1½″	¼″	28.5	50	11
2″	339	140	102	102	120	240	13	2″	¼″	38	62	13

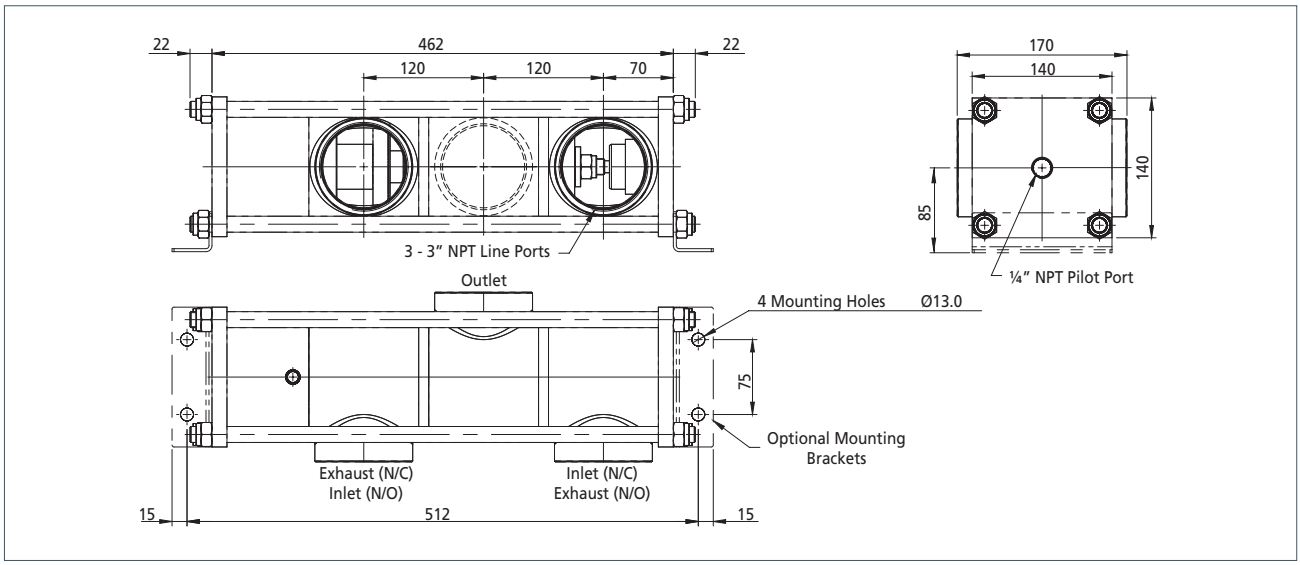

Dimensions (mm)

Drawings and 3D models for all valves and solenoid options available on request

Size	Mass (kg)	Max. Flow L/Min	Max. Flow SCFM	Min. Pilot Pressure	Cv
3"	30	111894	3954	See below	110 (90 offset ports)

Low temperature version not available in 3".
If alternative port positions are required consult factory. See examples below.

Alternative Port Positions

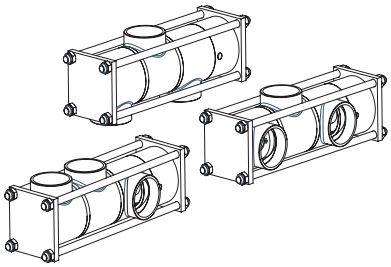

Pilot Pressures for 3" Poppet Valve

Line Pressure (bar)	Pilot Pressure (bar)	Line Pressure (bar)	Pilot Pressure (bar)
1	2	7	5
2	2.4	8	5.6
3	3.2	9	6.2
4	3.4	10	6.6
5	3.6	11	7.2
6	4.2	12	7.6

Coding Chart

Size		Ports[1]	Positions	Type		Function		Operator L/H		Operator R/H	
2	¼"	3	2	5	N/C & N/O	M	Mono Stable	2	Spring	1	Air
3	⅜"										
4	½"										
6	¾"										
8	1"										
5	1¼"										
7	1½"										
9	2"										
C	3"										

Body/Seal Material		Style	Port Type		Port Style		Approval		Approval	
E[2]	Stainless Steel / Low Temp	C	1	BSP	B	Body Ported	/ATEX[3]	Ⓔx II 2G c T6	/NACE	NACE
S	Stainless Steel / Nitrile		2	NPT				w/o option		w/o option
V	Stainless Steel / FKM									

•	3	2	5	M	2	1	-	•	C	•	B	•	•

[1] Alternative port positions available for 3" option - consult Midland Flow Ltd.
[2] Low temperature option not available in 3"
[3] ATEX Directive 2014/34/EU (Non-electrical Atex)

A range of 3/2 pilot solenoid operated poppet valves in stainless steel 316L for use on gases.

Features and Benefits

- Specifically designed for severe environments
- 316L stainless steel construction
- Designed for actuator control
- Large flow paths (up to 110 Cv)
- NACE capability option available

Media & Ambient Temperature Range

Please refer to solenoid selection chart on page 13.

Working Pressure

- Up to 12 bar (174 psi) maximum inlet pressure
- Minimum pilot pressure valve size dependent

Ports NPT (BSP option available)

- ¼″ to ½″ NPT
- Pilot ports ⅛″

Operating Media

- Gases – filtered lubricated or non-lubricated air, inert gas, sweet (natural) and sour gases - NACE
- Liquids – low pressure hydraulic, mineral oil or water (please consult factory)

NOTE: To prevent freezing of the condensate within the product, the media dew point must be at least 10 °C below the lowest ambient temperature the product will be exposed to.

K-TYPE solenoid shown - see solenoid specification chart

Construction Materials

- Body & trim: 316L stainless steel
- Springs: 316 stainless steel
- Seals: ¼″ to ½″ fluoroelastomer EPDM[1] (low temperature version)
- ¼″, ⅜″ and ½″ pilot solenoid poppet valves have internal feed to solenoid, therefore can only be used 3/2 normally closed, if normally open or separate pilot supply is required please consult factory

[1] The use of lubrication upstream of the product is not recommended for low temperature applications.

Drawings and 3D models for all valves and solenoid options available on request

Size	Mass (kg)	Max.Flow L/Min	Max.Flow SCFM	Operating Pressure	Cv
¼″	0.65 +solenoid	1216	43	3 to 12 bar	1.2
⅜″	0.9 +solenoid	1809	64	3 to 12 bar	1.8
½″	1.5 +solenoid	4020	142	3 to 12 bar	3.5

Maximum Flow at 6 bar, with 1 bar differential
Minimum Pilot Pressure at 6.3 bar body pressure

Internal Feed
to Solenoid 3/2 N/C

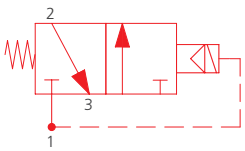

Certification Options Available

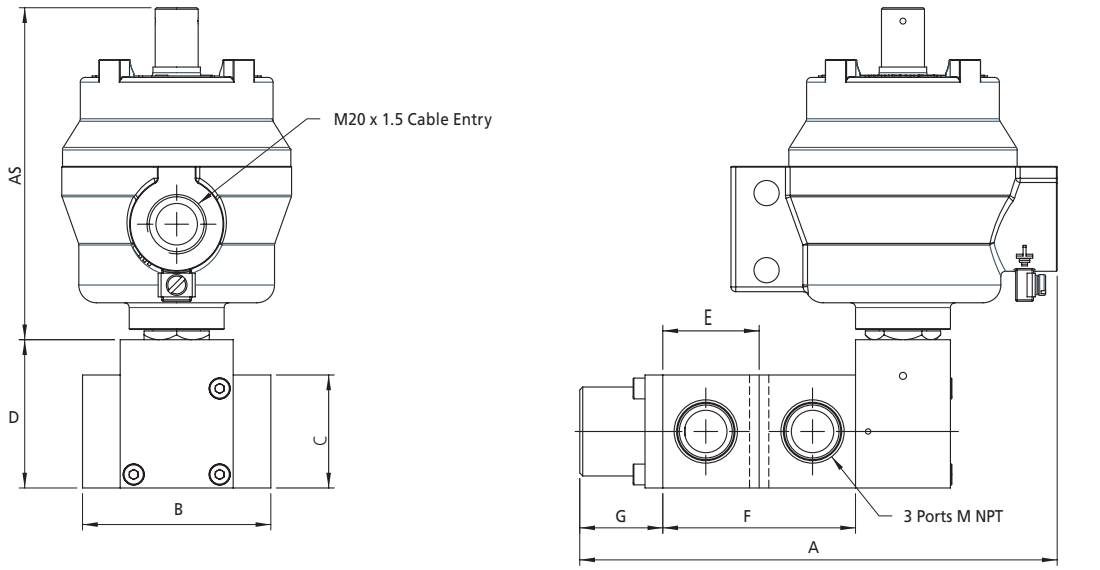

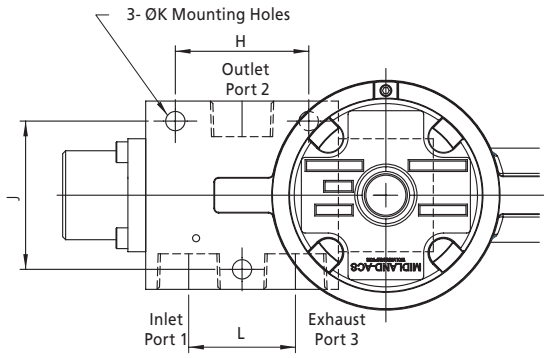

Dimensions (mm)

Size	A	B	C	D	E	F	G	H	J	K	L	M
¼″	132	44.5	32	41	27	54	10	26	35	5.5	28	¼″
⅜″	132	51	32	41	27	54	10	38	40	6.5	28	⅜″
½″	161	63.5	38	50	32.5	65	28	45	50	6.5	36	½″

* Denotes solenoid type. See page 12 - 13
# Denotes Voltage. See page 12

Coding Chart

Size	Ports[1]	Positions	Type	Function	Operator L/H	Operator R/H	Body/Seal Material	Style	Port Type	Port Style	Solenoid Type[1]	Voltage	Approval[4]	Approval
2 ¼″	3	2	3 N/C	M Mono Stable	2 Spring	3 Solenoid	E Stainless Steel / Low Temp	C	1 BSP	B Body Ported	K Exd IIC T6	C 12 VDC	/ATEX II 2G c T6	/NACE NACE
3 ⅜″			4 N/O			4 Solenoid Separate Supply	S Stainless Steel / Nitrile		2 NPT		7 Exd IIC T4	D 24 VDC	w/o option	w/o option
4 ½″			5[3] N/C N/O				V Stainless Steel / FKM				CL Nema 7 & 9	F 48 VDC		
											P Eex me II T4/T5	M 110 VAC 50/60Hz		
											T[2] Eex ia IIC T6	S 220 VAC 50Hz		
											4 Non-Haz	Y 28 VDC		
•	3	2	•	M	2	•	•	C	•	B	•	•	•	•

[1] For solenoid details see page 13
[2] 'T' type solenoid only available in 28 VDC (Y)
[3] When selecting Type '5' (NC, NO) the R/H Operator must be '4' - Solenoid Separate Supply
[4] ATEX Directive 2014/34/EU (Non-electrical Atex)
NOTE: The combination of the valve and the coil will determine maximum ambient i.e. always the lower of the two.

A range of 3/2 pilot solenoid operated poppet valves in stainless steel for use on gases.

Features and Benefits

- Specifically designed for severe environments
- 316L stainless steel construction
- Designed for actuator control
- Large flow paths (up to 110 Cv)
- NACE capability option available

Media & Ambient Temperature Range

Please refer to solenoid selection chart on page 13.

Working Pressure

- Up to 12 bar (174 psi) maximum inlet pressure
- Minimum pilot pressure via solenoid supply port (valve size dependent - see chart)

Ports NPT (BSP option available)

- ¾″ to 3″ NPT
- Pilot Ports ⅛″ or ¼″ (valve size dependent)

Operating Media

- Gases – filtered lubricated or non-lubricated air, inert gas, sweet (natural) and sour gases - NACE
- Liquids – low pressure hydraulic, mineral oil or water (please consult factory)

NOTE: To prevent freezing of the condensate within the product, the media dew point must be at least 10 °C below the lowest ambient temperature the product will be exposed to.

K-TYPE solenoid shown - see solenoid specification chart

Construction Materials

- Body and trim: 316L stainless steel
- Springs: 316 stainless steel
- Seals: ¾″ to 3″ Nitrile
  EPDM[1] (low temperature version)

[1] The use of lubrication upstream of the product is not recommended for low temperature applications.

Drawings and 3D models for all valves and solenoid options available on request

Size	Mass (kg)	Max.Flow L/Min	Max.Flow SCFM	Minimum Solenoid Supply Pressure	Cv
¾″	5 +solenoid	8041	284	4 bar	8
1″	5 +solenoid	12866	454	4 bar	13
1¼″	11 +solenoid	17650	624	4 bar	18
1½″	11 +solenoid	22379	791	4 bar	22
2″	18.7 +solenoid	50869	1798	4 bar	50
3″	30 +solenoid	111895	3955	See table on page 7	110

Maximum Flow at 6 bar, with 1 bar differential

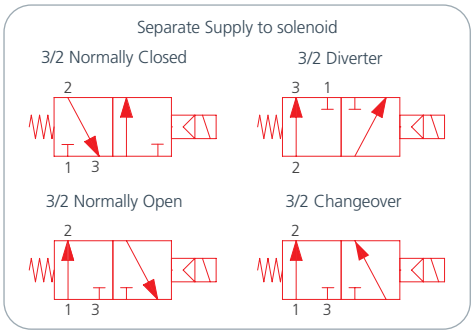

Certification Options Available

³/₄" to 2" version

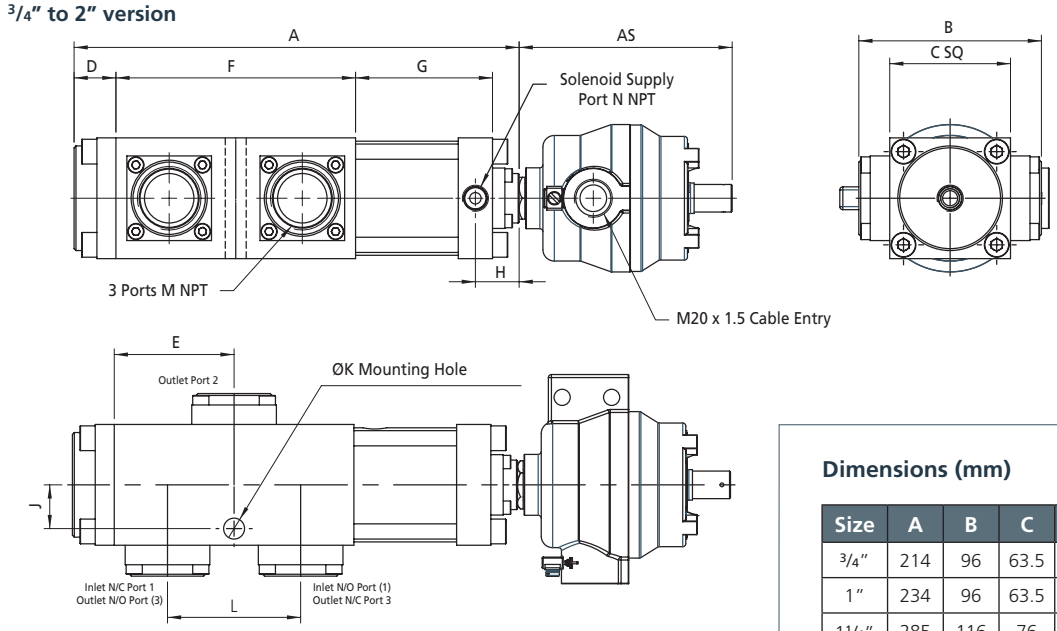

3" version

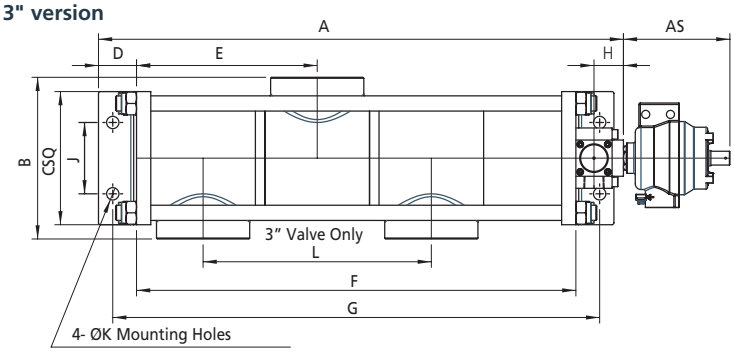

Dimensions (mm)

Size	A	B	C	D	E	F	G
³/₄"	214	96	63.5	22	53	106	72
1"	234	96	63.5	22	63	126	72
1¹/₄"	285	116	76	18	90	180	73
1¹/₂"	285	116	76	18	90	180	73
2"	378	140	102	13	120	240	86
3"	552	170	140	40	190	462	512

Size	H	J	K	L	M	N
³/₄"	23	23	11	60	³/₄"	¹/₄"
1"	23	23	11	70	1"	¹/₄"
1¹/₄"	23	28.5	11	100	1¹/₄"	¹/₄"
1¹/₂"	23	28.5	11	100	1¹/₂"	¹/₄"
2"	24	38	13	124	2"	¹/₄"
3"	31	75	13	240	3"	¹/₂"

If alternative port positions are required consult factory.

Coding Chart

Size		Ports	Positions	Type		Function		Operator L/H		Operator R/H		Body/Seal Material		Style	Port Type		Port Style		Solenoid Type[1]		Voltage		Approval[3]		Approval	
6	³/₄"	3	2	5	N/C & NO	M	Mono Stable	2	Spring	4	Solenoid Separate Supply	E	Stainless Steel / Low Temp	C	1	BSP	B	Body Ported	K	Exd IIC T6	C	12 VDC	/ATEX	II 2G c T6	/NACE	NACE
8	1"											S	Stainless Steel / Nitrile		2	NPT			7	Exd IIC T4	D	24 VDC		w/o option		w/o option
5	1¹/₄"											V	Stainless Steel / FKM						CL	Nema 7 & 9	F	48 VDC				
7	1¹/₂"																		P	Eex me II T4/T5	M	110 VAC 50/60Hz				
9	2"																		T[2]	Eex ia IIC T6	S	220 VAC 50Hz				
C	3"																		4	Non-Haz	Y	28 VDC				
•		3	2	5		M		2		4		•		C	•		B		•		•		•		•	

[1] For solenoid details see page 13
[2] 'T' type solenoid only available in 28 VDC (Y)
[3] ATEX Directive 2014/34/EU (Non-electrical Atex)
NOTE: The combination of the valve and the coil will determine maximum ambient i.e. always the lower of the two.

Solenoid Code K&7

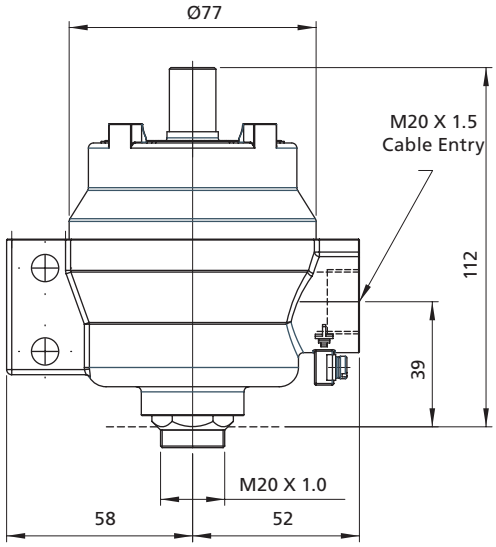

Solenoid Code CL

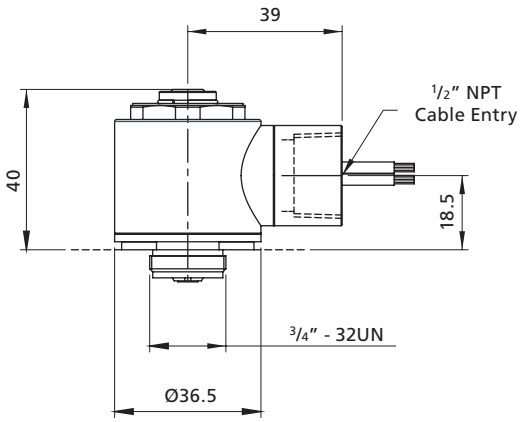

Solenoid Code P&T

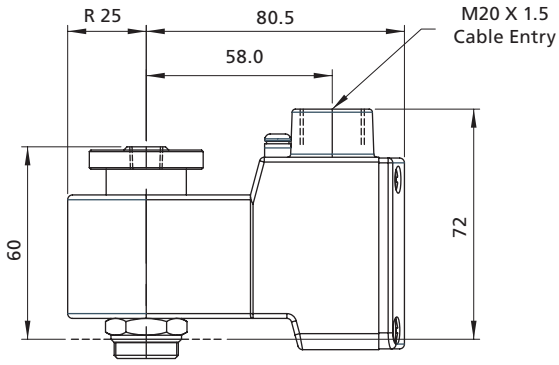

Solenoid Code 4

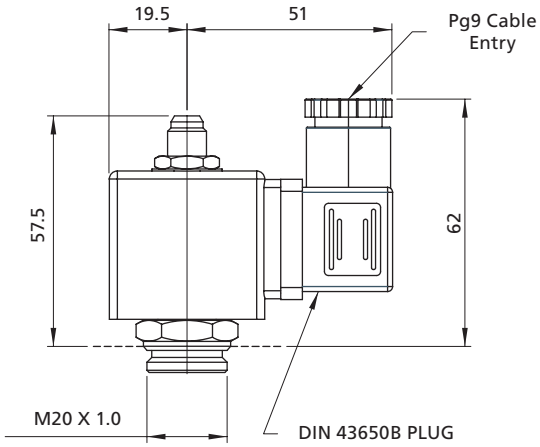

Voltages

Code	Voltage
C	12 VDC
D	24 VDC
F	48 VDC
M	110 VAC 50/60 Hz
S	220 VAC 50 Hz
Y	28 VDC

Solenoid specifications

Model Code	K	7	CL	P	T	4
Type of Protection	Exd IIC T6	Exd IIC T4	NEMA 7 & 9	Eex me II T4/T5	Eex ia IIC T6	Non-hazardous
Approved Area	Zones 1 and 2	Zones 1 and 2	Class I, Div 1, Group C & D. Class II, Div 1, Groups E, F, & G. Class II, Div 2, Groups C, D, E, F & G	Zones 1 and 2	Zones 0	None
Degree of Protection	IP67 (NEMA Equivalent: 6)	IP67 (NEMA Equivalent: 6)	NEMA 4 (IP55)	IP66 (NEMA Equivalent: 4X)	IP66 (NEMA Equivalent: 4X)	IP65 (NEMA Equivalent: 4)
Housing	316 Stainless Steel alt Aluminium Epoxy coated	316 Stainless Steel alt Aluminium Epoxy coated	Stainless Steel. Coil potted	Glass reinforced Polyamid (Stainless Steel conduit hub)	Glass reinforced Polyamid	Moulded plastic
Cable Entry	M20 x 1.5 (Optional 1/2" NPT consult factory for code)	M20 x 1.5 (Optional 1/2" NPT consult factory for code)	1/2" NPT or 24" flying lead	M20 x 1.5	M20 x 1.5	DIN plug
Power Consumption AC/DC	5W 22.4 VA (110 VAC) 23.4 VA (120 VAC)	5 W 22.4 VA (110 VAC) 23.4 VA (120 VAC)	1.8 W / 1.8 W	7.5 W (DC)	2.3 W (24 VDC)	9 W (DC) 9 W (Inrush 32 VA) (AC)
Maximum Admissable Surface Temp	85 °C (185 °F)	135 °C (275 °F)	160 °C (320 °F)	T4 135 °C (275 °F) T5 100 °C (212 °F)	85 °C (185 °F)	N/A
Maximum Ambient Temperature	40 °C (104 °F)	80 °C (176 °F)	40 °C (104 °F)	T4 75 °C (167 °F) T5 40 °C (104 °F)	65 °C (149 °F)	50 °C (122 °F)
Maximum Fluid Temperature	40 °C (104 °F)	80 °C (176 °F)	105 °C (221 °F)	T4 75 °C (167 °F) T5 40 °C (104 °F)	75 °C (167 °F)	75 °C (167 °F)
Maximum Working Pressure (Bar)	12	12	8.25	12	12	12
Solenoid Weight (kg)	1.62	1.62	0.29	0.63	0.53	0.20
Approved Standard	ATEX, CSA, UL, IECEX	ATEX, CSA, UL, IECEX	UL Listed / CSA Certified	ATEX, IECEX	ATEX, IECEX	

NOTES:
'T' type solenoid only available with 28 VDC coil (Y).

A range of 3/2 mechanically operated poppet valves for cylinder position detection in stainless steel 316L for use on gases.

Features and Benefits

- Specifically designed for severe environments
- 316L stainless steel construction
- Mechanically operated
- Limit switch for end of actuator stroke detection
- NACE capability option available

Media & Ambient Temperature Range

- -20 to + 80 °C (-4 to +176 °F)

Note: When product is ordered as /ATEX ambient temperature is limited to +40 °C (104 °F) Ex II2Gc T6.

Working Pressure

- Up to 12 bar (145 psi) maximum inlet pressure

Maximum Flow

- 402 l/min (14.2 SCFM)
  (at 6.0 bar with 1.0 bar differential)

Ports NPT (BSP option available)

- 1/8" NPT

Operating Media

- Gases – filtered lubricated or non-lubricated air, inert gas, sweet (natural) and sour gases
- Liquids – low pressure hydraulic, mineral oil or water (please consult factory)

NOTE: To prevent freezing of the condensate within the product, the media dew point must be at least 10 °C below the lowest ambient temperature the product will be exposed to.

Construction Materials

- Body and trim: 316L stainless steel
- Springs: 316 stainless steel
- Seals: Nitrile

Drawings and 3D models for all valves and solenoid options available on request

Size	Description	Mass (kg)	Operating Force		Cv
			N	lbf	
1/8"	Plunger operated, spring-return, N/C	0.21	44	9.9	0.26
1/8"	Plunger operated, spring-return, N/O	0.22	80	18	0.26
1/8"	Lever roller operated, spring-return, N/C	0.28	20	4.5	0.26
1/8"	Lever roller operated, spring-return, N/O	0.29	36	8.1	0.26

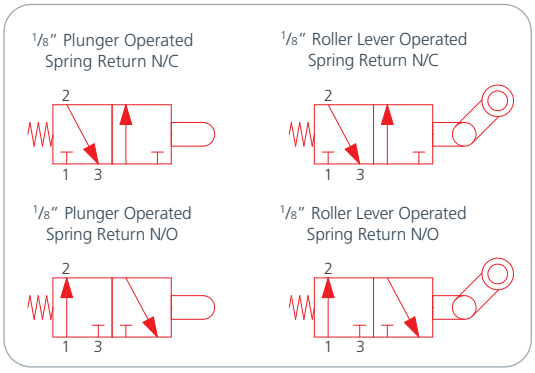

Certification options available

CE ATEX

3/2 Plunger operated spring-return

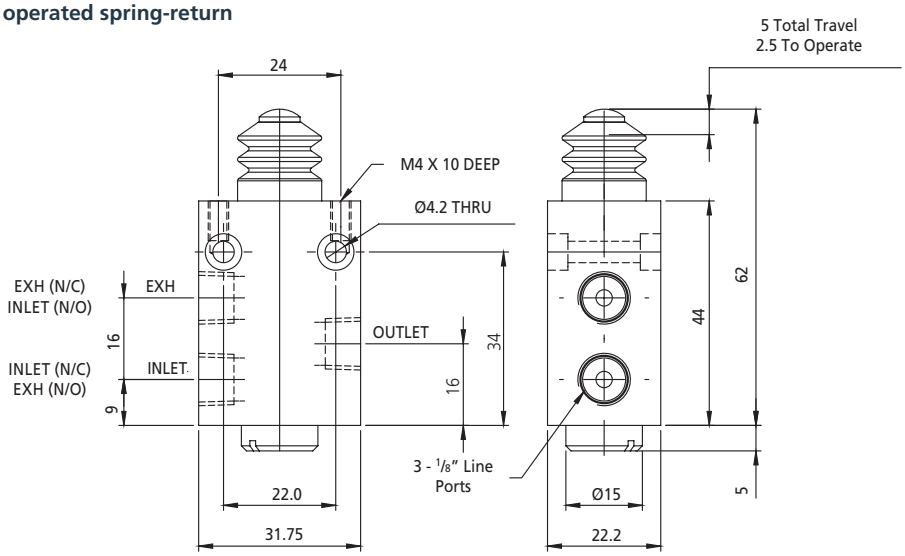

3/2 Roller lever operated spring-return

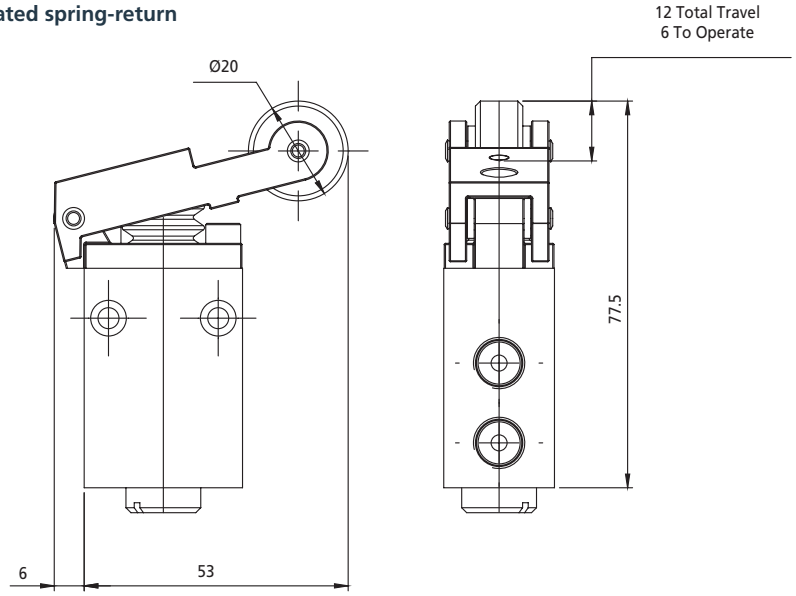

Coding Chart

Size		Ports	Positions	Type		Function		Operator L/H		Operator R/H	
1	1/8"	3	2	3	N/C	M	Mono Stable	6	Mechanical Plunger	2	Air
				4	N/O			8	Lever Roller		

Body/Seal Material		Style	Port Type		Port Style		Approval		Approval	
S	Stainless Steel / Nitrile	M	1	BSP	B	Body Ported	/ATEX	Ⓔx II 2G c T6	/NACE	NACE
V	Stainless Steel / FKM		2	NPT				w/o option		w/o option

Additional Options

1	3	2	•	M	•	2	-	•	M	•	B	•	•

Authorized Distributor
MONILEK OILFIELD

MONILEK
OILFIELD

E: sales@monilek.com
W: www.monilekgroup.com

MIDLAND
FLOW LIMITED

Midland Flow is a leading manufacturer of pneumatic and hydraulic instrumentation, supporting the oil and gas, chemical processing, rail, hydrogen, water and power industries.

Midland Flow Ltd.
Patrick Gregory Road
Wolverhampton
WV11 3DZ, UK

+44 (0)1902 305 678

sales@midlandflow.com

MFP-003-00-1