Authorized Distributor
MONILEK OILFIELD

E: sales@monilek.com
W: www.monilekgroup.com

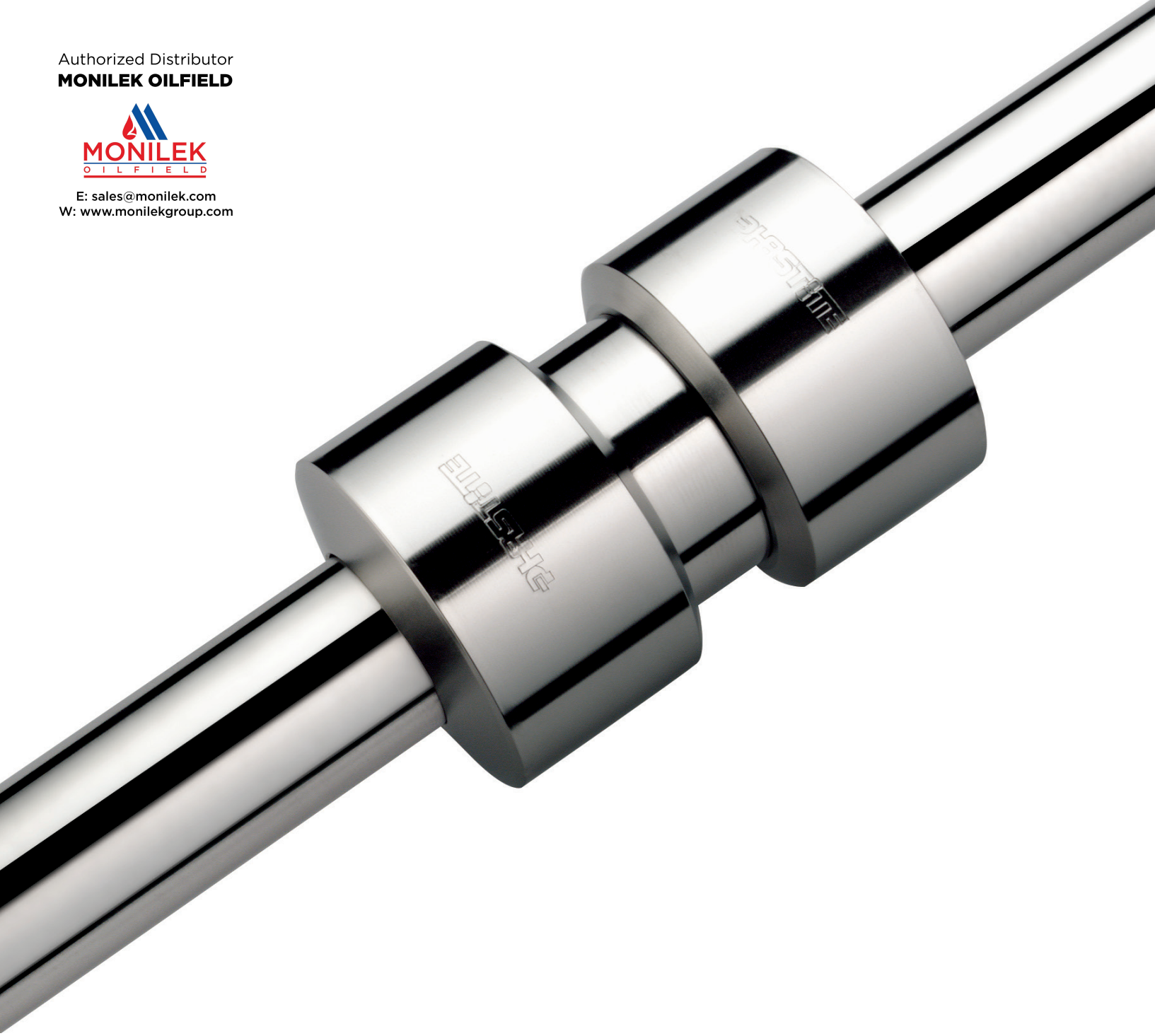

Phastite® Tube Connectors

Permanent Instrument Tube Connectors

ENGINEERING YOUR SUCCESS.

Phastite® Tube Connectors

Contents

Page 4	The Concept
Page 5-6	The Benefits
Page 7	Value Proposition
Page 8	Sealing
Page 9-10	The Assembly Process
Page 12-14	Tube Selection and Pressure Ratings
Page 15	Heat Code Traceability
Page 16-17	Testing
Page 18-19	Visual Index
Page 20	Union Straight Connectors (Permanent)
Page 21	Union Elbow Connectors (Permanent)
Page 22	Union Tees Connectors (Permanent)
Page 23	Union Cross Connectors (Permanent)
Page 24	Union Straight Drop Size Connectors (Permanent)
Page 25	Male Straight Connectors NPT (Termination)
Page 26	Female Straight Connectors NPT (Termination)
Page 27	Male Straight Connectors BSPP (Termination)
Page 28	Female Straight Connectors BSPP (Termination)
Page 29-35	Assembly Tools

WARNING

FAILURE, IMPROPER SELECTION OR IMPROPER USE OF THE PRODUCTS AND/OR SYSTEMS DESCRIBED HEREIN OR RELATED ITEMS CAN CAUSE DEATH, PERSONAL INJURY AND PROPERTY DAMAGE.

This document and other information from Parker Hannifin Corporation, its subsidiaries and authorized distributors provide product and/or system options for further investigation by users having technical expertise. It is important that you analyse all aspects of your application and review the information concerning the product or system in the current product catalogue. Due to the variety of operating conditions and applications for these products or systems, the user, through its own analysis and testing, is solely responsible for making the final selection of the products and systems and assuring that all performance, safety and warning requirements of the application are met.

The products described herein, including without limitation, product features, specifications, designs, availability and pricing, are subject to change by Parker Hannifin Corporation and its subsidiaries at any time without notice.

Offer of sale

The items described in this document are hereby offered for sale by Parker Hannifin Corporation, its subsidiaries or its authorized distributors. Any Order accepted by Parker Hannifin will be subject to our terms and conditions of sale, copy available on request.

The Concept

A Ferrule-less, Push-Fit Connector

Phastite® is a breakthrough in tube connection systems; its innovative design concept eliminates the costly requirement of welding and combines quick installation with a single assembly process achieving a tube connector that can be used in applications up to 22,500 psi (1,550 bar) and temperatures ranging from -45°C to 93°C (-50°F to 200°F). Already being used on thousands of applications worldwide, Parker is confident that Phastite® can make your processes Smarter, Faster, Cleaner, Safer.

Design

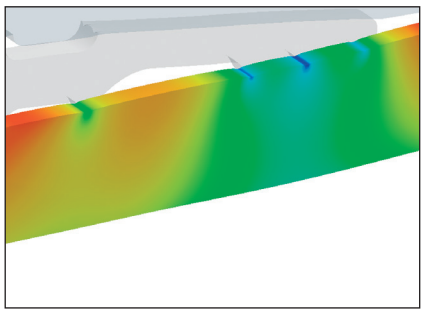

Phastite® has been specifically designed to meet ever-increasing industry standards and demands with regards to tube connectors and pressure containment. The latest computer aided engineering (CAE) and finite element analysis (FEA) techniques have been employed to optimise the design of the connectors and assembly tooling.

Note: Patent pending

Manufacturing

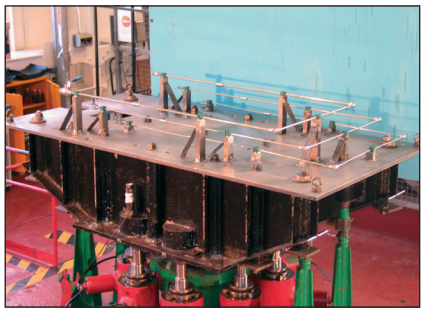

State of the art machining centres and over 100 years of connector manufacturing has been utilised for accurate and consistent manufacturing of Phastite® connectors. Phastite® is manufactured in Parker's facilities where strict quality controls are employed to ensure reliability and consistency.

Testing

Phastite® meets all the relevant performance and functional requirements of industry standards, including pressure containment. Throughout the development of Phastite®, product performance and integrity were paramount. The testing performed included a combination of hyperbaric, thermal cycling, vibration along different axes, flex fatigue, tensile pull test,
torsion, helium leak, gas tight and hydrostatic testing.

Materials

Phastite® can be manufactured in 316 Stainless Steel and corrosion resistant alloys including INCONEL® Alloy 625, INCOLOY® Alloy 825 and Super Duplex to cope with the most demanding environments, from subsea exploration in the north sea to natural gas drilling in Kazakhstan.

Note: INCONEL® and INCOLOY® are registered trademarks of Special Metals Corporation.

The Benefits

Safety

- Supplied pre-assembled, no loose parts thus eliminating potential assembly errors
- No additional operations using equipment that could lead to injury are required
- Permanent assembly is tamper proof
- Permanent leak free connections without the need for threaded components, thus removing potential loosening problems due to excess movement
- No Hot Work! Fire or explosion risks are eliminated along with any potential fume inhalation
- No disposal of hazardous materials used in any Hot Work activities
- No brittleness or corrosion implications (caused by welding heat for example)

Installation

- Simple installation process removes the need for skilled labour. The Phastool® and Tri-Tool® assures Phastite® connections are right the first time, every time
- Assembled in seconds, reducing assembly and project lead times
- Suitable for a wide variety of markets and applications
- Tolerant of tubing variation and defects, reducing work and re-testing
- Easy in-situ assembly, even close up against panels/bulkheads
- Eliminates the need for orbital welding equipment

Cost of Ownership

- No inspection requirements such as X-Ray or Dye penetrant testing during installation
- No re-work, just fit and forget
- No consumables such as welding rods, gases or cutting oil
- No Hot Work permits required
- Potential tube cost and weight savings (Phastite® is suitable for use on a wide range of wall thicknesses – including thin wall tube for gas applications)

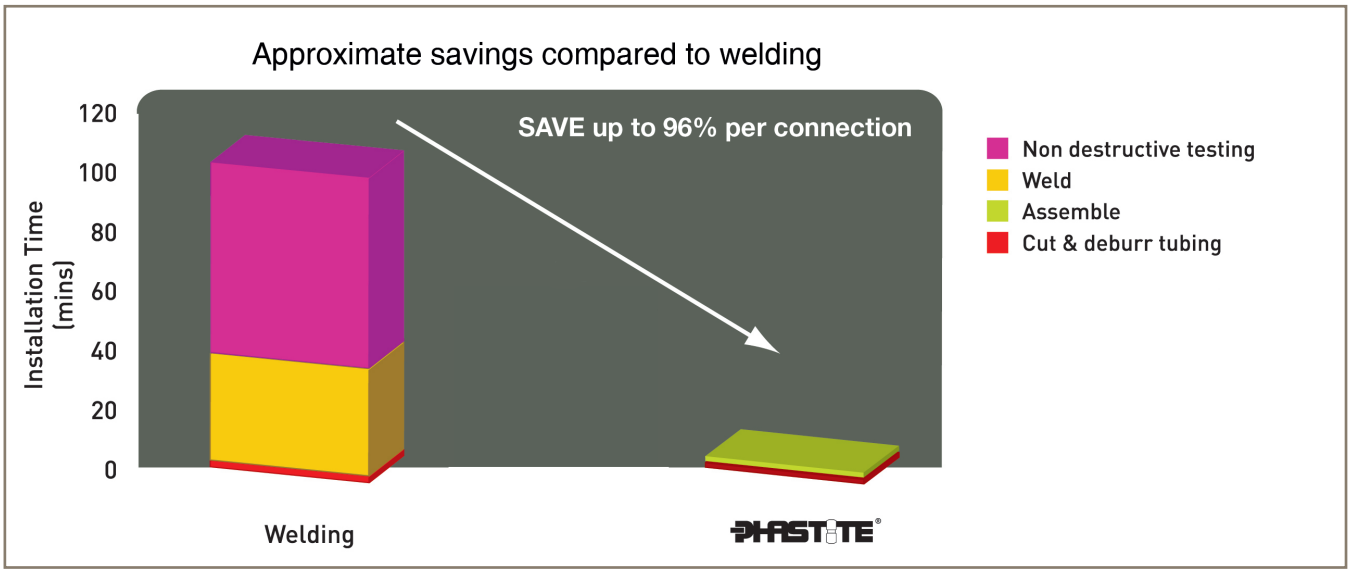

Value Proposition

Reduced installation costs

Phastite® offers an extremely quick, easy and simple way of connecting tubing. When considering how much time it takes to either weld or cone and thread tubing, Phastite® delivers a large reduction in total cost.

Simple assembly process

The Phastite® tooling, together with the connector's unique design ensures a leak free connection first time, every time. This reduces assembly time from hours to seconds.

No need to re-make or re-test

Phastite® delivers a leak free connection with no need for costly and time consuming re-making or re-testing.

No welding required

With Phastite® a permanent connection can be made in seconds without the need for certified labour or costly testing requirements.

Reduced tubing costs

Phastite® is used with standard tubing material. Controlled chemical composition or special tubing tolerances are not needed.

No special requirements

Standard tubing is all that is required.

Weight reduction

The need for extra wall thickness to allow threading is eliminated, meaning that weight as well as the tubing costs are reduced.

Increased safety

Phastite's simple assembly process reduces the number of operations needed to assemble a leak free joint. Simply insert the tubing into the pre-assembled connector. The Phastite® tooling delivers a leak free connection.

No loose parts

Phastite® connectors are supplied pre-assembled, no loose parts and no disassembling needed by the installer. This eliminates errors when assembling, as there are no parts to lose or to incorrectly assemble.

Simple make-up

Consistent make-up to a pre-determined stop face on the body. No measuring, simply insert the tube into the connector and let the tool do the rest. This reduces the possibility of any incorrect make-up.

Vibration tolerant

Phastite® provides a permanent leak free connection. There are no threaded components, removing potential loosening problems in vibration applications.

No need for hot work

Phastite® provides a leak free connection suitable for replacing welded systems, removing the associated risks with welding.

Approval

DNV approved.

Sealing

Phastite® Permanent Connectors

Phastite® permanent connectors use patented sealing technology to provide a unique permanent joint onto standard commercial grade tubing. The robust design ensure leak free performance in the most demanding of applications, and yet can be assembled in seconds with no manual effort.

Phastite's unique sealing ability allows the same product to be used on the extremes of tube wall thickness, ranging from thin wall sections as low as 0.035" (0.9mm) for light weight low pressure applications, to 0.188" (4.8mm) for high pressure thick wall systems.

The excellent sealing and holding properties of Phastite® is achieved by its unique design. It not only secures metal to metal sealing points onto the tubing from its unique formed peaks within the bore of the connector body but allows the tubing to expand into the pre-machined cavities giving additional holding properties.

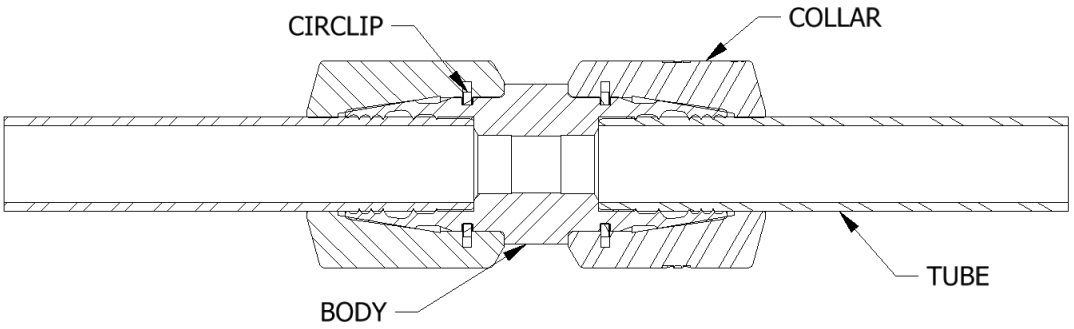

Phastite® Termination Connectors

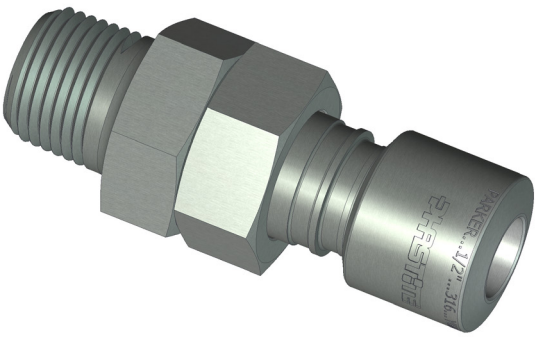

Phastite® termination connectors use the same patented sealing technology as the permanent connector to provide a unique joint onto standard tubing, with the additional ability of being able to 'break' and 'remake' the joint.

The design maintains the unique abilities of the permanent connector but provides an additional joint which provides the ability for installations to be maintained.

The Assembly Process

Phastite® Permanent Connectors

The Phastite® fitting is supplied complete with the collars pre-assembled to the body, thus removing the risk of losing or incorrectly assembling components.

The tubes are simply inserted into the Phastite® connector, adequate tube insertion is assured by using the Phastite® tube marker.

Simple assembly to a metal to metal stop face ensures correct assembly every time, without counting turns or monitoring torque levels.

A series of formed ridges makes contact with the tubing surface uniformly to create both a multiple seal and a secure mechanical grip, rotationally and axially.

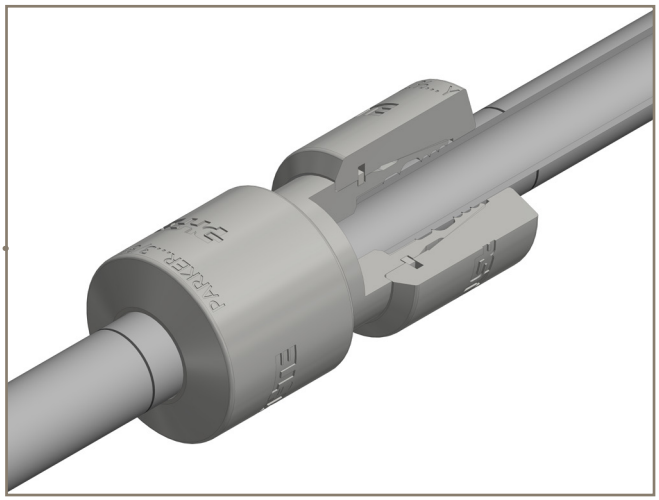

The Assembly Process

Phastite® Termination Connectors

The Phastite® fitting is supplied complete with the collars pre-assembled to the body, retaining the swivel nut, thus removing the risk of losing or incorrectly assembling components.

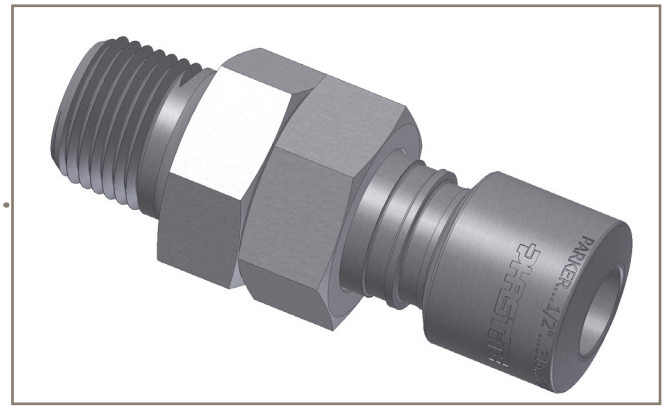

The tubes are simply inserted into the Phastite® connector, adequate tube insertion is assured by using the Phastite® tube marker.

Simple assembly to a metal to metal stop face ensures correct assembly every time, without counting turns or monitoring torque levels.

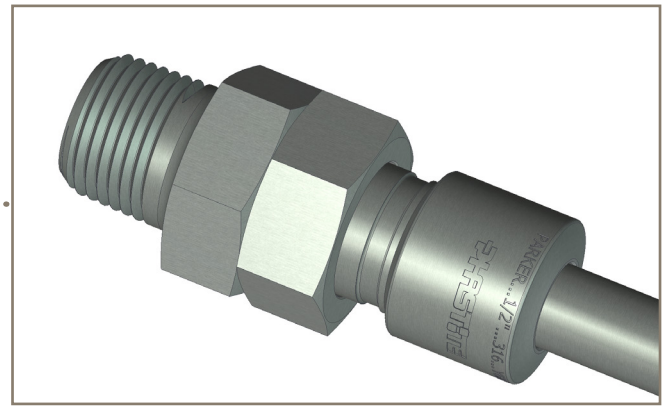

A series of formed ridges makes contact with the tubing surface uniformly to create both a multiple seal and a secure mechanical grip.

A mating conical arrangement provides leak tight sealing at the breakable joint, while correct assembly is ensured by a metal to metal stop face, without counting turns or monitoring torque levels.

The ability to ‘break’ and ‘remake’ the joint is enhanced by the virtual zero clearance of the design. Allowing the joint to be completely disconnected and removed without large pull out being required.

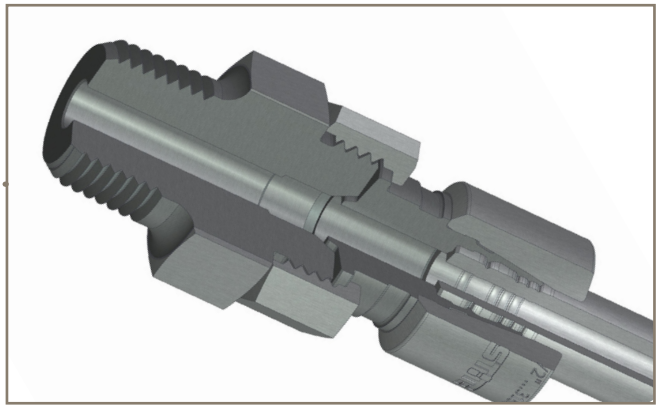

Tube Selection and Pressure Ratings

General selection criteria

Phastite® tube connectors have been designed to work in a wide variety of applications that demand the utmost in product performance. Although Phastite® connectors have been engineered and manufactured to consistently provide this level of reliability, no system integrity is complete without considering the critical link, tubing.

This guide is intended to assist the designer to properly select and order the correct quality tubing. Correct tube selection and installation are key ingredients in building leak-free reliable tubing systems. The most important consideration in the selection of suitable tubing for any application is the compatibility of the tubing material with the media to be contained. In addition tubing compatibility with the connector should be considered, as dissimilar materials in contact may be susceptible to galvanic corrosion. The differential in material hardness may also affect their ability to correctly hold onto and seal the tubing.

Pressure ratings for combinations of tube and connector

The pressure rating of a Phastite® connection assembly is that of the tube with the highest-pressure rating to which it can be attached and is presented in the Pressure Rating Tables on pages 12 and 13. The pressure rating of the tube has been calculated in accordance with ASME B31.3, Chemical Plant and Petroleum Refinery Piping standard, assuming maximum diameter, minimum wall thickness and minimum yield stress.

In the case of an all tube-ended connector, such as a union tee, the properly selected tubing is the limiting factor in the system. A termination connector may, however, combine a Phastite® connector end with another end of different form, such as male or female pipe thread. Pressure ratings for other ends are determined in accordance with applicable standards and may, in fact, be lower than the rating for the Phastite® tube connector end.

Pressure rating and wall thickness of tubes

The pressure rating table presents the pressure ratings for type 316 Stainless Steel, INCONEL® Alloy 625, INCOLOY® Alloy 825 and Super Duplex seamless tubes for temperatures up to 93°C (200°F).

This table also shows the minimum and maximum wall thickness of tubes that shall be used within the scope of the Parker Phastite® design for each size of tube connector. If a user chooses a tube wall thickness outside those recommended in the following tables, the user should first consult the technical department of Parker Instrumentation Products Division.

Derivation of pressure ratings

The working pressure ratings for tubing shall be derived from stress values and methodologies listed in ASME B31.3.

Pressure Rating Tables

Phastite® Permanent Connectors

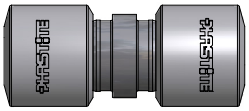

Tube Material	Tube O.D.	Wall Thickness - Maximum Tube Assembly Rating - PSI (bar)*						
		0.035	0.049	0.065	0.083	0.095	0.154	0.188
Stainless Steel 316 *(ASTM A269)*	1/4”	5,100 (350)	7,500 (510)	10,300 (710)	13,300 (910)			
	3/8”	3,300 (220)	4,800 (330)	6,600 (450)	8,600 (590)	10,000 (680)		
	1/2”	2,600 (170)	3,700 (250)	5,100 (350)	6,700 (460)	7,800 (530)		
	5/8”		2,950 (200)	4,000 (270)	5,200 (350)	6,050 (410)		
	3/4”		2,400 (160)	3,300 (220)	4,250 (290)	4,950 (340)	8,650 (590)	
	1”			2,400 (160)	3,150 (210)	3,650 (250)	6,250 (430)	7,750 (530)
INCONEL® Alloy 625 *(ASTM B444-06)*	1/4”	11,000 (750)	16,100 (1110)	22,500 (1550)				
	3/8”	7,100 (480)	10,200 (700)	14,000 (960)	18,700 (1280)			
	1/2”	5,200 (350)	7,500 (510)	10,200 (700)	13,400 (920)			
	5/8”			8,000 (550)	10,400 (710)			
	3/4”			6,600 (450)	8,500 (580)	9,900 (680)	17,400 (1190)	
INCOLOY® Alloy 825 *(ASTM B423)*	1/4”	6,400 (440)	9,300 (640)	13,100 (900)	17,900 (1230)			
	3/8”	4,100 (280)	5,900 (400)	8,200 (560)	10,900 (750)			
	1/2”	3,000 (200)	4,300 (290)	5,900 (400)	7,800 (530)			
	5/8”			4,600 (310)	6,100 (420)			
	3/4”			3,800 (260)	5,000 (340)	5,800 (390)		
Super Duplex *(ASTM A789/ A789M)*	1/4”		14,600 (1000)	20,400 (1400)				
	3/8”	6,400 (440)	9,300 (640)	12,700 (870)	16,900 (1160)			
	1/2”	4,700 (320)	6,800 (460)	9,200 (630)	12,100 (830)			
	5/8”			7,200 (490)	9,500 (650)	11,000 (750)		
	3/4”			5,900 (400)	7,800 (530)			

Table 1 - Pressure Rating for Permanent Connectors (Imperial)*

Tube Material	Tube O.D.	Wall Thickness - Maximum Tube Assembly Rating - PSI (bar)*								
		1	1.2	1.5	1.8	2	2.2	3.5	4	4.5
Stainless Steel 316 *(ASTM A269)*	6mm	6,600 (450)	8,200 (560)	10,700 (730)	13,400 (920)	15,400 (1060)				
	10mm	3,800 (260)	4,600 (310)	5,900 (400)	7,300 (500)	8,300 (570)	9,200 (630)			
	12mm	3,100 (210)	3,800 (260)	4,800 (330)	5,900 (400)	6,700 (460)	7,500 (510)			
	16mm	2,300 (150)	2,800 (190)	3,500 (240)	4,300 (290)	4,800 (330)	5,400 (370)	6,200 (420)		
	20mm			2,800 (190)	3,400 (230)	3,800 (260)	4,200 (280)	7,100 (480)	8,300 (480)	
	25mm			2,200 (150)	2,700 (180)	3,000 (200)	3,300 (220)	5,500 (370)	6,400 (370)	7,300 (440)
INCONEL® Alloy 625 *(ASTM B444-06)*	6mm	13,300 (910)	16,400 (1130)	21,400 (1470)						
	10mm	7,600 (520)	9,300 (640)	11,900 (820)	14,700 (1010)	16,600 (1140)				
	12mm	6,300 (430)	7,600 (520)	9,700 (660)	11,900 (820)	13,400 (920)				
	16mm			7,100 (480)	8,700 (590)	9,700 (660)				
	20mm			5,600 (380)	6,800 (460)	7,600 (520)	8,500 (580)	14,300 (980)		
INCOLOY® Alloy 825 *(ASTM B423)*	6mm	7,700 (530)	9,500 (650)	12,500 (8660)	15,600 (1070)	17,900 (1230)				
	10mm	4,400 (300)	5,400 (370)	6,900 (470)	8,500 (580)	6,900 (660)				
	12mm	3,600 (240)	4,400 (300)	5,600 (380)	6,900 (470)	7,800 (530)				
	16mm			4,100 (280)	5,000 (340)	5,700 (390)				
	20mm			3,200 (220)	3,900 (260)	4,400 (300)	4,900 (330)			
Super Duplex *(ASTM A789/ A789M)*	6mm			19,500 (1340)						
	10mm	6,900 (470)	8,400 (570)	10,800 (740)	13,300 (910)	15,000 (1030)				
	12mm	5,700 (390)	6,900 (470)	8,800 (600)	10,800 (740)	12,200 (840)				
	16mm			6,500 (440)	7,900 (540)	8,800 (600)	9,800 (670)			
	20mm				6,200 (420)	6,900 (470)				

Table 2 - Pressure Rating for Permanent Connectors (Metric)*

Tooling

Phastool® 3A, 3B and Tri-Tool®

Phastool ®3B and Tri-Tool®

Tri-Tool®

* The working pressure ratings for tubing in tables 1 to 4 are calculated directly from ASME B31.3

Phastite® Termination Connectors

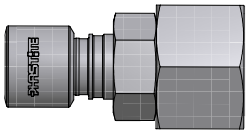

Tube Material	Tube O.D.	Thread Size	Wall Thickness - Maximum Tube Assembly Rating - PSI (bar)*						
			0.035	0.049	0.065	0.083	0.095	0.154	0.188
Stainless Steel 316 *(ASTM A269)*	1/4”	1/4”	5,100 (350)	7,500 (510)	9,130 (630)	9,130 (630)			
	3/8”	1/4”	3,300 (220)	4,800 (330)	6,600 (450)	8,600 (590)	9,130 (630)		
	3/8”	3/8”	3,300 (220)	4,800 (330)	6,600 (450)	8,600 (590)	8,700 (600)		
	1/2”	1/2”	2,600 (170)	3,700 (250)	5,100 (350)	6,700 (460)	7,250 (500)		
	5/8”	3/4”		2,950 (200)	4,000 (270)	5,200 (350)	5,800 (400)		
	3/4”	3/4”		2,400 (160)	3,300 (220)	4,250 (290)	4,950 (340)	5,800 (400)	
	1”	1”			2,400 (160)	3,150 (210)	3,150 (210)	5,800 (400)	5,800 (400)
INCONEL® Alloy 625 *(ASTM B444-06)*	1/4”	1/4”	10,000 (690)	10,000 (690)	10,000 (690)				
	3/8”	1/4”	7,100 (480)	10,000 (690)	10,000 (690)	10,000 (690)			
	3/8”	3/8”	7,100 (480)	9,570 (660)	9,570 (660)	9570 (660)			
	1/2”	1/2”	5,200 (350)	7,500 (510)	7,970 (550)	7,970 (550)			
	5/8”	3/4”			6,090 (420)	6,090 (420)			
	3/4”	3/4”			6,090 (420)	6,090 (420)	6,090 (420)	6,090 (420)	
INCOLOY® Alloy 825 *(ASTM B423)*	1/4”	1/4”	6,400 (440)	9,130 (630)	9,130 (630)	9,130 (630)			
	3/8”	1/4”	4,100 (280)	5,900 (400)	8,200 (560)	9,130 (630)			
	3/8”	3/8”	4,100 (280)	5,900 (400)	8,200 (560)	8700 (600)			
	1/2”	1/2”	3,000 (200)	4,300 (290)	5,900 (400)	7,250 (500)			
	5/8”	3/4”			4,600 (310)	5,800 (400)			
	3/4”	3/4”			3,800 (260)	5,000 (340)	5,800 (400)		
Super Duplex *(ASTM A789/ A789M)*	1/4”	1/4”		10,000 (690)	10,000 (690)				
	3/8”	1/4”	6,400 (440)	9,300 (640)	10,000 (690)	10,000 (690)			
	3/8”	3/8”	6,400 (440)	9,300 (640)	9,570 (660)	9,570 (660)			
	1/2”	1/2”	4,700 (320)	6,800 (460)	7,970 (550)	7,970 (550)			
	5/8”	3/4”			6,090 (420)	6,090 (420)			
	3/4”	3/4”			6,090 (420)	6,090 (420)	6,090 (420)		

Table 3 - Pressure Rating for BSPP and NPT Termination Connectors (Imperial)*

Tube Material	Tube O.D.	Thread Size	Wall Thickness - Maximum Tube Assembly Rating - PSI (bar)*								
			1	1.2	1.5	1.8	2	2.2	3.5	4	4.5
Stainless Steel 316 *(ASTM A269)*	6mm	1/4”	6,600 (450)	8,200 (560)	9,130 (630)	9,130 (630)	9,130 (630)				
	10mm	1/4”	3,800 (260)	4,600 (310)	5,900 (400)	7,300 (500)	8,300 (570)	9,130 (630)			
	10mm	3/8”	3,800 (260)	4,600 (310)	5,900 (400)	7,300 (500)	8,300 (570)	8,700 (600)			
	12mm	1/2”	3,100 (210)	3,800 (260)	4,800 (330)	5,900 (400)	6,700 (460)	7,250 (500)			
	16mm	3/4”	2,300 (150)	2,800 (190)	3,500 (240)	4,300 (290)	4,800 (330)	5,400 (370)	5,800 (400)		
	20mm	3/4”			2,800 (190)	3,400 (230)	3,800 (260)	4,200 (280)	5,800 (400)	5,800 (400)	
	25mm	1”			2,200 (150)	2,700 (180)	3,000 (200)	3,300 (220)	5,500 (370)	5,800 (400)	5,800 (400)
INCONEL® Alloy 625 *(ASTM B444-06)*	6mm	1/4”	10,000 (690)	10,000 (690)	10,000 (690)						
	10mm	1/4”	7,600 (520)	9,300 (640)	10,000 (690)	10,000 (690)	10,000 (690)				
	10mm	3/8”	7,600 (520)	9,300 (640)	9,570 (660)	9,570 (660)	9,570 (660)				
	12mm	1/2”	6,300 (430)	7,600 (520)	7,970 (550)	7,970 (550)	7,970 (550)				
	16mm	3/4”			6,090 (420)	6,090 (420)	6,090 (420)				
	20mm	3/4”			5,600 (380)	6,090 (420)	6,090 (420)	6,090 (420)	6,090 (420)		
INCOLOY® Alloy 825 *(ASTM B423)*	6mm	1/4”	7,700 (530)	9,130 (630)	9,130 (630)	9,130 (630)	9,130 (630)				
	10mm	1/4”	4,400 (300)	5,400 (370)	6,900 (470)	8,500 (580)	6,900 (660)				
	10mm	3/8”	3,600 (240)	4,400 (300)	5,600 (380)	6,900 (470)	7,800 (530)				
	12mm	1/2”	3,600 (240)	4,400 (300)	5,600 (380)	6,900 (470)	7,250 (500)				
	16mm	3/4”			4,100 (280)	5,000 (340)	5,700 (390)				
	20mm	3/4”			3,200 (220)	3,900 (260)	4,400 (300)	4,900 (330)			
Super Duplex (ASTM A789/ A789M)	6mm	1/4”			10,000 (690)						
	10mm	1/4”	6,900 (470)	8,400 (570)	10,000 (690)						
	10mm	3/8”	6,900 (470)	8,400 (570)	9,570 (660)	9,570 (660)	9,570 (660)				
	12mm	1/2”	5,700 (390)	6,900 (470)	7,970 (550)	7,970 (550)	7,970 (550)				
	16mm	3/4”			6,090 (420)	6,090 (420)	6,090 (420)	6,090 (420)			
	20mm	3/4”				6,090 (420)	6,090 (420)				

Table 4 - Pressure Rating for BSPP and NPT Termination Connectors (Metric)*

Tooling

Tri-Tool®

* The working pressure ratings for tubing in tables 1 to 4 are calculated directly from ASME B31.3

Pressure rating at elevated temperatures

To determine allowable pressure at elevated temperatures, multiply the allowable working pressure from tables 1 to 4 by the factor shown in table 5 here.

Example: 12mm x 1.5mm wall 316 stainless steel tubing has a working pressure of 317 bar @ room temperature. If the system were to operate at 426°C, a factor of 80% or 0.8 would apply and the "at temperature" system pressure would therefore be 317 x 0.8 = 254 bar.

These factors are based on ASME B31.3 derating factors for specific tubing materials. They are derived from table A-1, basic allowable stresses in metals.

°F	°C	316 SS	INCONEL® Alloy 625	INCOLOY® Alloy 825	Super Duplex
100	38	1	1	1	1
200	93	1	0.93	0.92	0.99
300	149	1	0.88	0.87	0.94
400	204	0.97	0.85	0.83	0.90
500	260	0.90	0.82	0.79	0.90
600	315	0.85	0.79	0.76	0.88
700	371	0.82	0.77	0.74	-
800	426	0.80	0.75	0.73	-
900	482	0.78	0.74	-	-
1000	537	0.77	0.73	-	-
1100	593	0.62	0.73	-	-
1200	649	0.37	0.72	-	-

Table 5 - Factors used to determine tubing pressure ratings at elevated temperatures.

Tubing ordering suggestions

Tubing for use with Phastite® connectors should be ordered to insure adequate quality for good performance. Each request for tubing should specify the material, nominal outside diameter, and wall thickness. Ordering to the correct ASTM specifications ensures that the tubing will be dimensionally, physically and chemically within the strict limits as laid down in the standard.

In addition to this, the tubing should be ordered free from scratches and imperfections and suitable for bending or flaring. The tubing should be both annealed and of maximum hardness, as recommended in the below table, and delivered in a proper manner to preserve the product quality. The following grades and standards can be used successfully with Phastite® fittings:

Material	Type	ASTM Tubing Specification	Condition	Min. Recommended Hardness	Max. Recommended Hardness
Stainless Steel	304, 316, 316L	ASTM A269, A249, A213, A632	Fully Annealed	70 HRb	90 HRb
INCONEL® Alloy 625	625	ASTM B444	Grade 1 (Soft Annealed) and Grade 2 (Solution Annealed)	90 HRb	102 HRb
INCOLOY® Alloy 825	825	ASTM B423	Annealed	80 HRb	90 HRb
Super Duplex	Super Duplex	ASTM A269	Fully Annealed	23 HRC (240 HBW)	32 HRC (300 HBW)

Table 6

Note on selection

The pressure rating information presented in these tables 1 to 4, is intended as a useful guide to demonstrate the performance potential of the Phastite® connector when properly installed according to Parker recommended practices and to assist the user in the proper selection of tube and fitting for a particular application. Every effort is made to ensure this information is clearly presented but it is the responsibility of the user and the system designer to ensure the appropriate selection and specification of tube and fitting and that the specified assembly meets the requirements of the system or application.

Heat Code Traceability (HCT)

HCT refers to the fact that a specific part can be traced back to the original mill heat of metal from which it was made. Beginning with the original melt, a package of documents is created which completely describes the metal in physical and chemical terms. The end result is that a number, which is permanently stamped to the part, refers back to the document package.

HCT offers these advantages:

- Raw materials for manufacture must meet code requirements. This can be verified through documentation so that the customer is certain that what is ordered is received
- HCT provides a record of chemical analysis with the raw material
- HCT relieves the user of Parker instrumentation fittings of any doubts. It acts as an assurance for today and for tomorrow

The Phastite® connector is offered in four different materials:

- 316 Stainless Steel
- Inconel® Alloy 625
- Incoloy® Alloy 825
- Super Duplex

In addition to the documentation of chemical and physical properties, great care is taken throughout the manufacture of Parker's connectors to ensure that potential stress corrosion will not be a problem in normal usage of the parts. Manufacturing processes avoid exposure of the parts to mercury or halogens, and control of thermal treatment avoids the condition known as continuous grain boundary carbide precipitation.

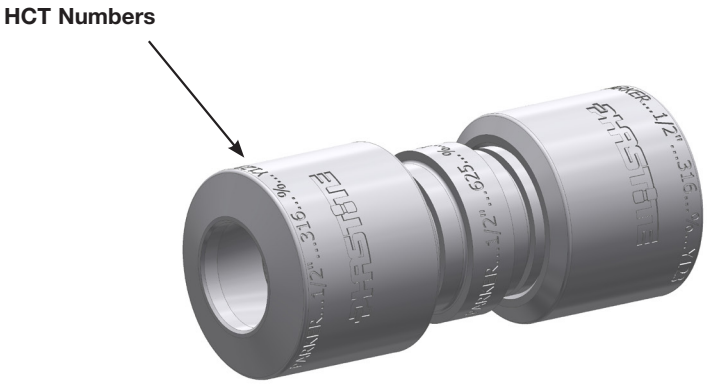

Testing

During the development of Phastite®, a very rigorous testing program was undertaken. This involved the testing of various connector types, including shapes and straights.

Alongside internal testing in our state-of-the-art facility, additional samples were sub-contracted for external testing to then be externally validated by DNV.

Phastite® met or exceeded all requirements including, but not limited to, the following tests:

Pressure containment

Hydrostatic testing was carried out for all tube sizes on the thickest and thinnest wall tubing as laid out in the tube selection guide on page 11. A large quantity of these tests have been carried out internally and externally and witnessed by various 3rd parties and customers. Phastite® product has been subjected to pressure of 1.5 times the tubes maximum working pressure to ensure adequate sealing and tube grip.

Flexural test

Flexural tests have been carried out fully in accordance to ISO 19879 and BS 4368 or ASTM F1387. The test specimen is pressurised to a pre-determined pressure and one end is oscillated at a high frequency. No pressure loss or visible leakage is acceptable throughout the test.

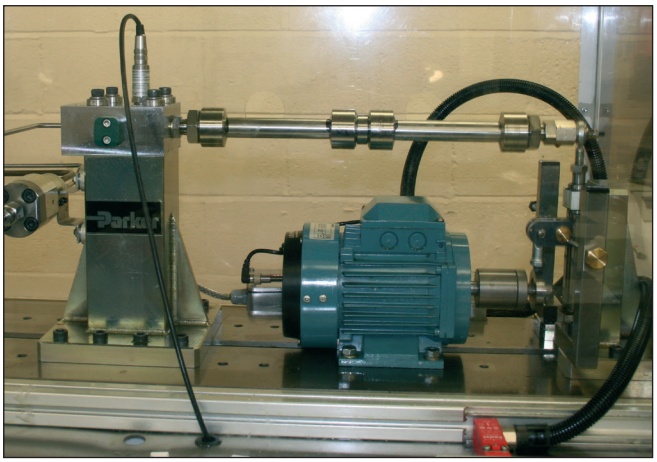

Flexural test

Combined pulsation and flexural

Combined pulsation and flexural tests have been carried out fully in accordance to ISO 19879 and BS 4368. The test specimen is pressurised with hydraulic fluid at a pre-determined pressure. The test specimen is subjected to both oscillation and pulsation forces at once to simulate an extreme service condition. No pressure loss or visible leakage is acceptable throughout the test.

Hydrostatic burst test

This test internally pressurises the complete Phastite® tube assembly until destruction. In all cases the tube has proven to be the weakest component within the assembly. The tests ensured that tube burst was achieved on all sizes without any movement of the Phastite® fitting.

Gas testing

Gas testing was performed under pressure using nitrogen or helium gas at 1500 psi (100 bar). The purpose of the test is to ensure gas tight sealing is achieved followed by a high pressure hydro test at full cold working pressure. These tests have been carried out fully in accordance to ISO 19879 and externally witnessed.

Hyperbaric test

In addition to Phastite's ability to withstand internal pressures, Phastite® has been externally pressure tested to ensure sealability in external pressure applications. External pressure was applied with helium or nitrogen gas and water. At no point did leakage occur and in a number of cases the external pressure was adequate to collapse the tool without loosing the Phastite® seal.

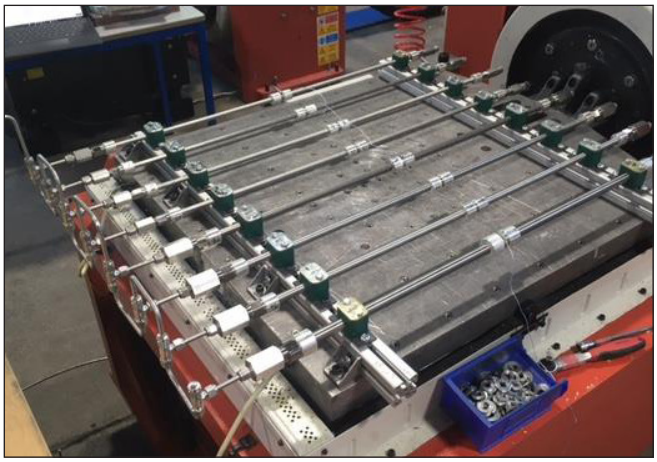

Vibration test

Deflection test

Phastite® was tested to prove its holding power by securing connectors at each end of two half-metre lengths of tubing joined by a Phastite® connector in the middle of the assembly. A load was applied to deflect the middle connector by a distance of 60mm (2.36”) whilst pressurised at 2610 psi (180 bar) with no leakage experienced. This meets the customers’ requirements however a more stringent test was also completed, deflecting the assembly by 300mm. Pressure was increased until tube burst was achieved. Once again proving the ability of the Phastite® product.

Vibration

Vibration tests have been carried out fully in accordance ASTM F1387. The test specimen is pressurised to a pre-determined pressure whilst being vibrated at its resonant frequency. No pressure loss or visible leakage is acceptable throughout the test.

Fire test (testing on 316 only)

The Phastite® product has been fully tested in accordance to BS.6755 pt 2. In this test the assembly is subjected to a fire scenario with temperatures in excess of 750°C (1382°F) for over 30 minutes. The test pieces are pressurised throughout the test period and are constantly examined for leakage / water loss. Phastite® past these test requirements with no visible leakage or water loss.

Tensile pull test

Tensile pull tests have been carried out fully in accordance ASTM F1387. The Phastite® product has been subjected to a pull test where a Phastite® fitting is assembled between two tube lengths. These tube lengths are then mechanically pulled apart until failure, thus ensuring the resistive strength of Phastite®.

Thermo cycling

Thermo cycling tests have been carried out fully in accordance ASTM F1387. Phastite® tube assemblies have been subjected to thermo cycling from -65°C to +175°C (-85°F to 347°F), whilst pressurised with nitrogen gas. No pressure loss was acceptable throughout the test.

Thermo cycling test

Additional testing has also been carried out for CRA’s and specific applications.

Phastite® Connectors: Visual Index

PS
Permanent Union
Equal Straight
page 20

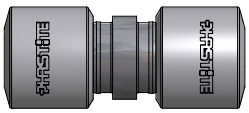

PE
Permanent Union
Equal Elbow
page 21

PT
Permanent Union
Equal Tee
page 22

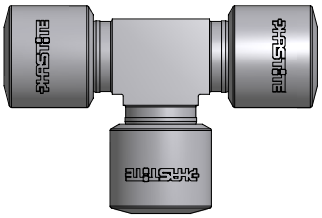

PC
Permanent Union
Equal Cross
page 23

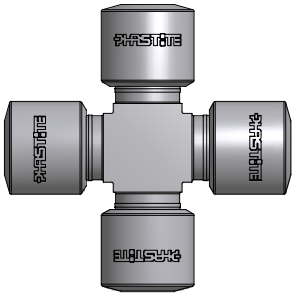

PS
Permanent Union
Drop Size
page 24

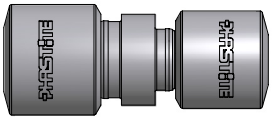

TMS-N
Termination Male Straight - NPT
page 25

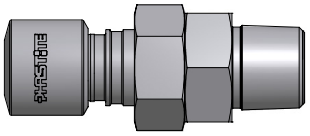

TFS-N
Termination Female Straight - NPT
page 26

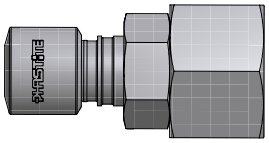

TMS-R
Termination Male Straight - BSPP
page 27

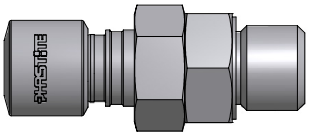

TFS-R
Termination Female Straight - BSPP
page 28

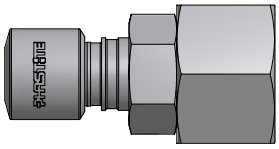

Phastool® 3A Hand Held
page 29

Phastool® 3B
page 30

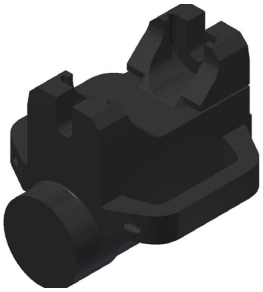

Tri-Tool® Bench Tool
page 32

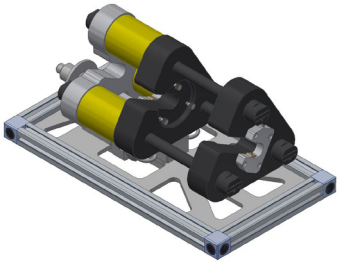

Phastool® Jaw Inserts
page 33

Tri-Tool® Jaw Inserts
page 33

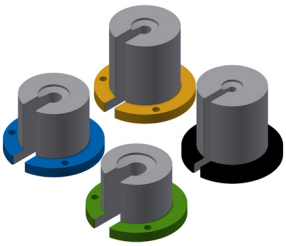

Tubemarker
page 34

Hand Operated Pump (HP)
page 35

Battery Operated Pump (BP)
page 35

Mains Operated Pump (MP)
page 35

Permanent Union Equal Straight

PS
Permanent Union Equal Straight

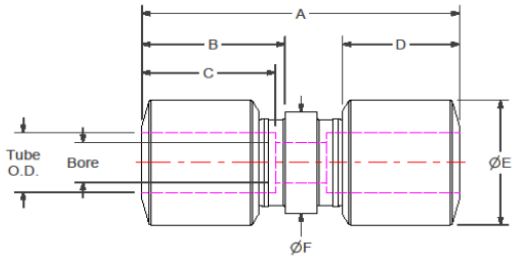

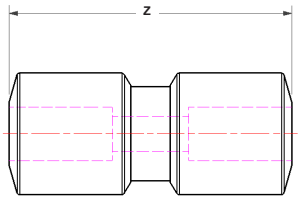

Imperial

Part No.	Tube O.D.	A	B	C	D	E	F	Bore	Z
PH-4-PS	1/4”	55.2 (2.17”)	25.2 (0.99”)	21.2 (0.83”)	20.0 (0.79”)	17.0 (0.67”)	12.7 (0.50”)	4.0 (0.16”)	44.8 (1.76”)
PH-6-PS	3/8”	58.6 (2.31”)	25.9 (1.02”)	22.7 (0.89”)	21.0 (0.83”)	22.0 (0.87”)	17.0 (0.67”)	6.0 (0.24”)	48.8 (1.92”)
PH-8-PS	1/2”	60.1 (2.37”)	27.1 (1.07”)	23.6 (0.93”)	22.0 (0.87”)	25.0 (0.98”)	20.5 (0.81”)	8.0 (0.31”)	50.0 (1.97”)
PH-10-PS	5/8”	70.2 (2.76”)	29.9 (1.18”)	26.1 (1.03”)	25.0 (0.98”)	32.0 (1.26”)	25.0 (0.98”)	12.0 (0.47”)	60.5 (2.35”)
PH-12-PS	3/4”	81.7 (3.21”)	35.8 (1.41”)	31.2 (1.23”)	29.5 (1.16”)	36.0 (1.42”)	29.5 (1.16”)	14.0 (0.55”)	69.2 (2.72”)
PH-16-PS	*1”	100.2 (3.94”)	43.8 (1.72”)	34.9 (1.37”)	35.3 (1.39”)	50.0 (1.97”)	38.0 (1.50”)	18.0 (0.71”)	83.3 (3.28”)

Metric

Part No.	Tube O.D.	A	B	C	D	E	F	Bore	Z
PH-M6-PS	6mm	55.2 (2.17”)	25.2 (0.99”)	21.2 (0.83”)	20.0 (0.79”)	17.0 (0.67”)	12.7 (0.50”)	4.0 (0.16”)	44.8 (1.76”)
PH-M10-PS	10mm	58.6 (2.31”)	25.9 (1.02”)	22.7 (0.89”)	21.0 (0.83”)	22.0 (0.87”)	17.0 (0.67”)	6.0 (0.24”)	48.8 (1.92”)
PH-M12-PS	12mm	60.1 (2.37”)	27.1 (1.07”)	23.6 (0.93”)	22.0 (0.87”)	25.0 (0.98”)	20.5 (0.81”)	8.0 (0.31”)	50.0 (1.97”)
PH-M16-PS	16mm	70.2 (2.76”)	29.9 (1.18”)	26.1 (1.03”)	25.0 (0.98”)	32.0 (1.26”)	25.0 (0.98”)	12.0 (0.47”)	60.5 (2.35”)
PH-M20-PS	20mm	81.7 (3.21”)	35.8 (1.41”)	31.2 (1.23”)	29.5 (1.16”)	36.0 (1.42”)	29.5 (1.16”)	14.0 (0.55”)	69.2 (2.72”)
PH-M25-PS	*25mm	100.2 (3.94”)	43.8 (1.72”)	34.9 (1.37”)	35.3 (1.39”)	50.0 (1.97”)	38.0 (1.50”)	18.0 (0.71”)	83.3 (3.28”)

Dimensions for reference only, subject to change.

To order, add material designator to part number above - *Example PH-4-PS-SS*

Material	Stainless Steel	INCONEL® Alloy 625	INCOLOY® Alloy 825	Super Duplex
Designator	SS	625	825	SD

***1” and 25mm only available in 316 Stainless Steel**

Permanent Union Equal Elbow

PE
Permanent Union Equal Elbow

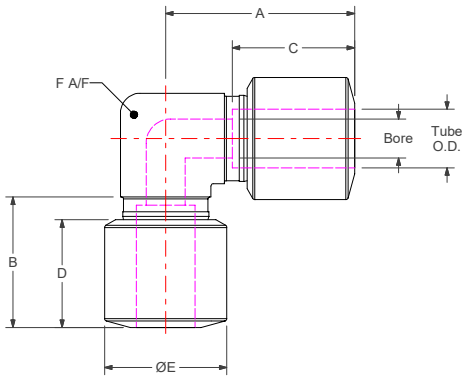

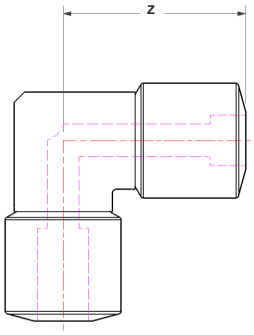

Imperial

Part No.	Tube O.D.	A	B	C	D	E	F	Bore	Z
PH-4-PE	1/4”	37.8 (1.49”)	25.2 (0.99”)	21.2 (0.83”)	20.0 (0.79”)	17.0 (0.67”)	14.5 (0.57”)	4.0 (0.16”)	32.6 (1.28”)
PH-6-PE	3/8”	39.5 (1.56”)	25.9 (1.02”)	22.7 (0.89”)	21.0 (0.83”)	22.0 (0.87”)	14.5 (0.57”)	6.0 (0.24”)	34.6 (1.36”)
PH-8-PE	1/2”	39.1 (1.54”)	27.1 (1.07”)	23.6 (0.93”)	22.0 (0.87”)	25.0 (0.98”)	18.5 (0.73”)	8.0 (0.31”)	34.0 (1.34”)
PH-10-PE	5/8”	46.8 (1.85”)	29.9 (1.18”)	26.1 (1.03”)	25.0 (0.98”)	32.0 (1.26”)	22.5 (0.89”)	12.0 (0.47”)	41.9 (1.65”)
PH-12-PE	3/4”	56.3 (2.22”)	35.8 (1.41”)	31.2 (1.23”)	29.5 (1.16”)	36.0 (1.42”)	28.5 (1.12”)	14.0 (0.55”)	50.0 (1.97”)
PH-16-PE	*1”	67.1 (2.64”)	43.8 (1.72”)	34.8 (1.37”)	35.3 (1.39”)	50.0 (1.97”)	38.5 (1.52”)	18.0 (0.71”)	58.6 (2.31”)

Metric

Part No.	Tube O.D.	A	B	C	D	E	F	Bore	Z
PH-M6-PE	6mm	37.8 (1.49”)	25.2 (0.99”)	21.2 (0.83”)	20.0 (0.79”)	17.0 (0.67”)	14.5 (0.57”)	4.0 (0.16”)	32.6 (1.28”)
PH-M10-PE	10mm	39.5 (1.56”)	25.9 (1.02”)	22.7 (0.89”)	21.0 (0.83”)	22.0 (0.87”)	18.5 (0.73”)	6.0 (0.24”)	34.6 (1.36”)
PH-M12-PE	12mm	39.1 (1.54”)	27.1 (1.07”)	23.6 (0.93”)	22.0 (0.87”)	25.0 (0.98”)	18.5 (0.73”)	8.0 (0.31”)	34.0 (1.34”)
PH-M16-PE	16mm	46.8 (1.85”)	29.9 (1.18”)	26.1 (1.03”)	25.0 (0.98”)	32.0 (1.26”)	22.5 (0.89”)	12.0 (0.47”)	41.9 (1.65”)
PH-M20-PE	20mm	56.3 (2.22”)	35.8 (1.41”)	31.2 (1.23”)	29.5 (1.16”)	36.0 (1.42”)	28.5 (1.12”)	14.0 (0.55”)	50.0 (1.97”)
PH-M25-PE	*25mm	67.1 (2.64”)	43.8 (1.72”)	34.8 (1.37”)	35.3 (1.39”)	50.0 (1.97”)	38.5 (1.52”)	18.0 (0.71”)	58.6 (2.31”)

Dimensions for reference only, subject to change.

To order, add material designator to part number above - *Example PH-M10-PE-SS*

Material	Stainless Steel	INCONEL® Alloy 625	INCOLOY® Alloy 825	Super Duplex
Designator	SS	625	825	SD

***1” and 25mm only available in 316 Stainless Steel**

Permanent Union Equal Tee

PT
Permanent Union Equal Tee

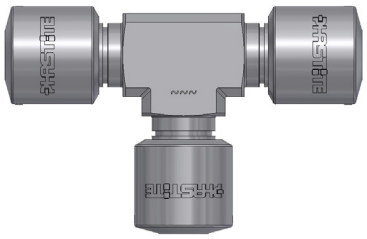

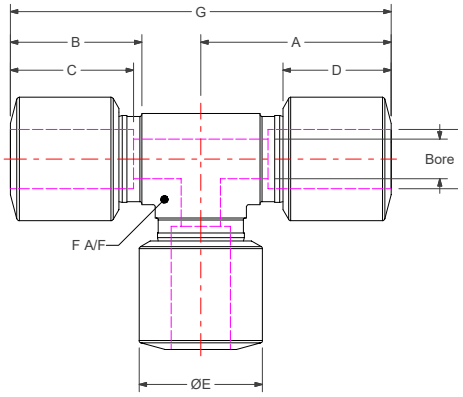

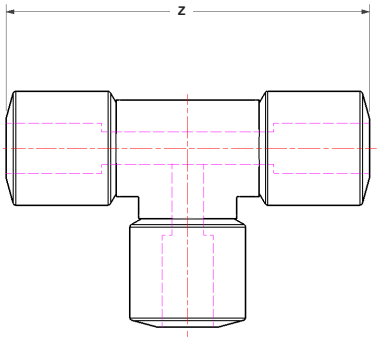

Imperial

Part No.	Tube O.D.	A	B	C	D	E	F	G	Bore	Z
PH-4-PT	1/4”	37.8 (1.49”)	25.2 (0.99”)	21.2 (0.83”)	20.0 (0.79”)	17.0 (0.67”)	12.7 (0.50”)	75.6 (2.98”)	4.0 (0.16”)	65.2 (2.57”)
PH-6-PT	3/8”	39.5 (1.56”)	25.9 (1.02”)	22.7 (0.89”)	21.0 (0.83”)	22.0 (0.87”)	19.0 (0.75”)	79.0 (3.11”)	6.0 (0.24”)	69.2 (2.72”)
PH-8-PT	1/2”	39.1 (1.54”)	27.1 (1.07”)	23.6 (0.93”)	22.0 (0.87”)	25.0 (0.98”)	18.5 (0.73”)	78.1 (3.07”)	8.0 (0.31”)	68.0 (2.68”)
PH-10-PT	5/8”	46.8 (1.85”)	29.9 (1.18”)	26.1 (1.03”)	25.0 (0.98”)	32.0 (1.26”)	23.8 (0.89”)	93.6 (3.69”)	12.0 (0.47”)	84.5 (3.33”)
PH-12-PT	3/4”	56.3 (2.22”)	35.8 (1.41”)	31.2 (1.23”)	29.5 (1.16”)	36.0 (1.42”)	30.2 (1.19”)	112.2 (4.43”)	14.0 (0.55”)	100.0 (3.94”)
PH-16-PT	*1”	67.1 (2.64”)	43.8 (1.72”)	34.9 (1.37”)	35.3 (1.39”)	50.0 (1.97”)	38.1 (1.50”)	134.1 (5.28”)	18.0 (0.71”)	117.5 (4.62”)

Metric

Part No.	Tube O.D.	A	B	C	D	E	F	G	Bore	Z
PH-M6-PT	6mm	37.8 (1.49”)	25.2 (0.99”)	21.2 (0.83”)	20.0 (0.79”)	17.0 (0.67”)	12.7 (0.50”)	75.6 (2.98”)	4.0 (0.16”)	65.2 (2.57”)
PH-M10-PT	10mm	39.5 (1.56”)	25.9 (1.02”)	22.7 (0.89”)	21.0 (0.83”)	22.0 (0.87”)	19.0 (0.75”)	79.0 (3.11”)	6.0 (0.24”)	69.2 (2.72”)
PH-M12-PT	12mm	39.1 (1.54”)	27.1 (1.07”)	23.6 (0.93”)	22.0 (0.87”)	25.0 (0.98”)	18.5 (0.73”)	78.1 (3.07”)	8.0 (0.31”)	68.0 (2.68”)
PH-M16-PT	16mm	46.8 (1.85”)	29.9 (1.18”)	26.1 (1.03”)	25.0 (0.98”)	32.0 (1.26”)	23.8 (0.89”)	93.6 (3.69”)	12.0 (0.47”)	84.5 (3.33”)
PH-M20-PT	20mm	56.3 (2.22”)	35.8 (1.41”)	31.2 (1.23”)	29.5 (1.16”)	36.0 (1.42”)	30.2 (1.19”)	112.2 (4.43”)	14.0 (0.55”)	100.0 (3.94”)
PH-M25-PT	*25mm	67.1 (2.64”)	43.8 (1.72”)	34.9 (1.37”)	35.3 (1.39”)	50.0 (1.97”)	38.1 (1.50”)	134.1 (5.28”)	18.0 (0.71”)	117.5 (4.62”)

Dimensions for reference only, subject to change.

To order, add material designator to part number above - *Example PH-6-PT-625*

Material	Stainless Steel	INCONEL® Alloy 625	INCOLOY® Alloy 825	Super Duplex
Designator	SS	625	825	SD

***1” and 25mm only available in 316 Stainless Steel**

Permanent Union Equal Cross

PC
Permanent Union Equal Cross

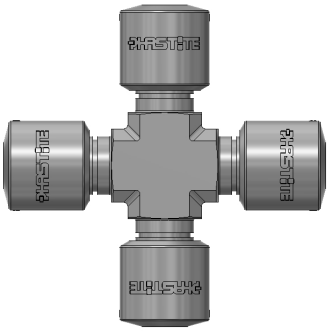

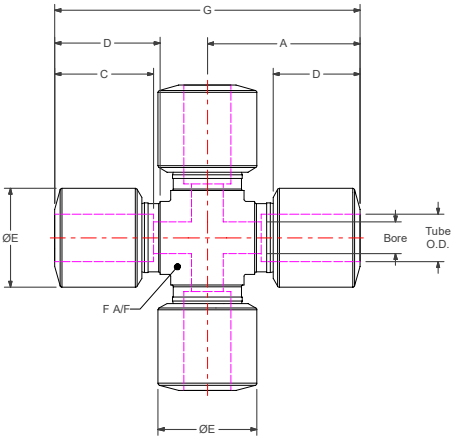

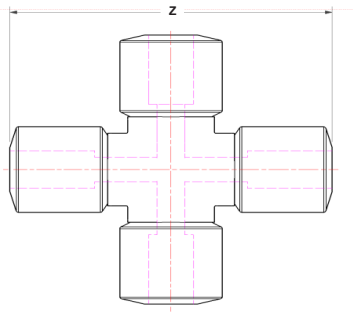

Imperial

Part No.	Tube O.D.	A	B	C	D	E	F	G	Bore	Z
PH-4-PC	1/4”	37.2 (1.47”)	25.2 (0.99”)	20.9 (0.82”)	19.0 (0.75”)	17.0 (0.67”)	14.5 (0.57”)	74.5 (2.93”)	4.0 (0.16”)	65.2 (2.57”)
PH-6-PC	3/8”	39.2 (1.54”)	25.9 (1.02”)	22.9 (0.90”)	21.0 (0.83”)	22.0 (0.87”)	14.5 (0.57”)	78.5 (3.09”)	6.0 (0.24”)	69.2 (2.72”)
PH-8-PC	1/2”	38.6 (1.52”)	27.1 (1.07”)	23.6 (0.93”)	22.0 (0.87”)	25.0 (0.98”)	18.5 (0.73”)	77.3 (3.04”)	8.0 (0.31”)	68.0 (2.68”)
PH-10-PC	5/8”	45.9 (1.81”)	29.9 (1.18”)	25.9 (1.02”)	25.0 (0.98”)	32.0 (1.26”)	22.5 (0.89”)	91.8 (3.61”)	12.0 (0.47”)	84.5 (3.33”)

Metric

Part No.	Tube O.D.	A	B	C	D	E	F	G	Bore	Z
PH-M6-PC	6mm	37.2 (1.47”)	25.2 (0.99”)	20.9 (0.82”)	19.0 (0.75”)	17.0 (0.67”)	14.5 (0.57”)	74.5 (2.93”)	4.0 (0.16”)	65.2 (2.57”)
PH-M10-PC	10mm	39.2 (1.54”)	25.9 (1.02”)	22.9 (0.90”)	21.0 (0.83”)	22.0 (0.87”)	14.5 (0.57”)	78.5 (3.09”)	6.0 (0.24”)	69.2 (2.72”)
PH-M12-PC	12mm	38.6 (1.52”)	27.1 (1.07”)	23.6 (0.93”)	22.0 (0.87”)	25.0 (0.98”)	18.5 (0.73”)	77.3 (3.04”)	8.0 (0.31”)	68.0 (2.68”)
PH-M16-PC	16mm	45.9 (1.81”)	29.9 (1.18”)	25.9 (1.02”)	25.0 (0.98”)	32.0 (1.26”)	22.5 (0.89”)	91.8 (3.61”)	12.0 (0.47”)	84.5 (3.33”)

Dimensions for reference only, subject to change.

To order, add material designator to part number above - *Example PH-M12-PC-SS*

Material	Stainless Steel	INCONEL® Alloy 625	INCOLOY® Alloy 825	Super Duplex
Designator	SS	625	825	SD

Permanent Union Drop Size Straight

PS
Permanent Union Drop Size Straight

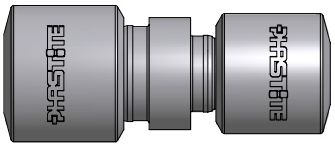

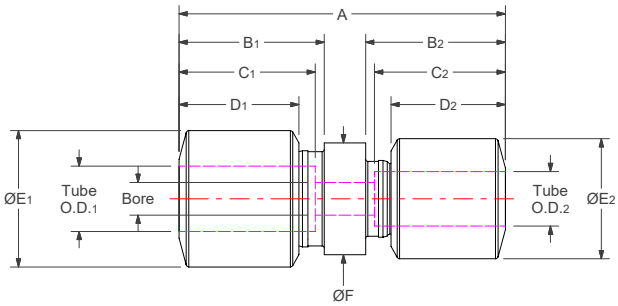

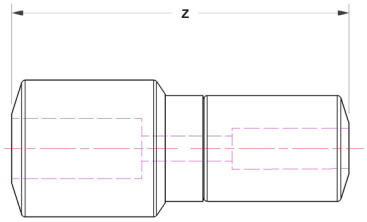

Imperial

Part No.	A	Tube O.D.1	B1	C1	D1	E1	Tube O.D.2	B2	C2	D2	E2	F2	Bore	Z
PH-6-4-PS	56.3 (2.22")	3/8"	25.9 (1.02")	22.7 (0.89")	21.0 (0.83")	22.0 (0.87")	1/4"	25.2 (0.99")	21.2 (0.83")	20.0 (0.79")	17.0 (0.67")	17.0 (0.67")	4.0 (0.16")	46.2 (1.82")
PH-8-6-PS	58.8 (2.31")	1/2"	26.7 (1.05")	23.6 (0.93")	22.0 (0.87")	25.0 (0.98")	3/8"	25.7 (1.01")	22.9 (0.90")	21.0 (0.83")	22.0 (0.87")	20.5 (0.81")	6.0 (0.24")	49.4 (1.85")
PH-10-8-PS	74.7 (2.94")	5/8"	29.9 (1.18")	26.1 (1.03")	25.0 (0.98")	32.0 (1.26")	1/2"	27.1 (1.07")	23.6 (0.93")	22.0 (0.87")	25.0 (0.98")	25.0 (0.98")	8.0 (0.31")	65.4 (2.58")
PH-12-10-PS	82.5 (3.25")	3/4"	35.6 (1.40")	31.2 (1.23")	29.5 (1.16")	36.0 (1.42")	5/8"	29.7 (1.17")	25.9 (1.02")	25.0 (0.98")	32.0 (1.26")	29.5 (1.16")	12.0 (0.47")	71.7 (2.83")
PH-16-12-PS	93.0 (3.66")	*1"	40.3 (1.59")	34.8 (1.37")	33.5 (1.32")	50.0 (1.97")	3/4"	37.6 (1.48")	32.4 (1.28")	31.0 (1.22")	43.0 (1.69")	38.0 (1.50")	16.0 (0.63")	79.6 (3.14")

Metric

Part No.	A	Tube O.D.1	B1	C1	D1	E1	Tube O.D.2	B2	C2	D2	E2	F2	Bore	Z
PH-M10-M6-PS	56.3 (2.22")	10mm	25.9 (1.02")	22.7 (0.89")	21.0 (0.83")	22.0 (0.87")	8mm	25.2 (0.99")	21.2 (0.83")	20.0 (0.79")	17.0 (0.67")	17.0 (0.67")	4.0 (0.16")	46.2 (1.82")
PH-M12-M10-PS	58.1 (2.29"))	12mm	26.7 (1.05")	23.6 (0.93")	22.0 (0.87")	25.0 (0.98")	10mm	25.7 (1.01")	22.9 (0.90")	21.0 (0.83")	22.0 (0.87")	20.5 (0.81")	6.0 (0.24")	49.4 (1.85")
PH-M16-M12-PS	65.4 (2.58")	16mm	29.9 (1.18")	26.1 (1.03")	25.0 (0.98")	32.0 (1.26")	14mm	27.1 (1.07")	23.6 (0.93")	22.0 (0.87")	25.0 (0.98")	25.0 (0.98")	8.0 (0.31")	65.4 (2.58")
PH-M20-M16-PS	74.8 (2.94")	20mm	35.6 (1.40")	31.2 (1.23")	29.5 (1.16")	36.0 (1.42")	18mm	29.7 (1.17")	25.9 (1.02")	25.0 (0.98")	32.0 (1.26")	29.5 (1.16")	12.0 (0.47")	71.7 (2.83")
PH-M25-M20-PS	83.8 (3.30")	*25mm	40.3 (1.59")	34.8 (1.37")	33.5 (1.32")	50.0 (1.97")	22mm	37.6 (1.48")	32.4 (1.28")	31.0 (1.22")	43.0 (1.69")	38.0 (1.50")	16.0 (0.63")	79.6 (3.14")

Dimensions for reference only, subject to change.

To order, add material designator to part number above - *Example PH-4-PS-SS*

Material	Stainless Steel	INCONEL® Alloy 625	INCOLOY® Alloy 825	Super Duplex
Designator	SS	625	825	SD

***1" and 25mm only available in 316 Stainless Steel**

Termination Male Straight - NPT

TMS - N
Termination Male Straight - NPT

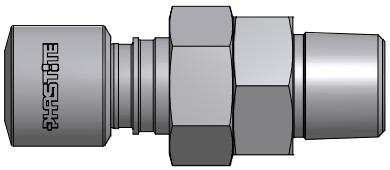

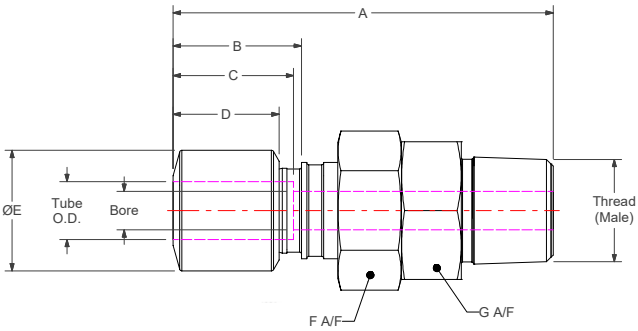

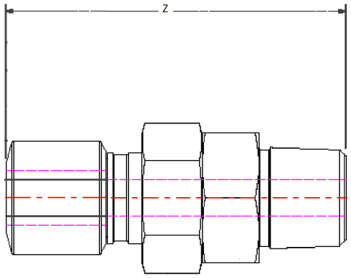

Imperial

Part No.	Tube O.D.	A	B	C	D	E	F	G	Bore	Thread	Z
PH-4-4N-TMS	1/4”	67.1 (2.64”)	23.7 (0.93”)	20.9 (0.82”)	19.0 (0.75”)	17.0 (0.67”)	20.6 (0.81”)	19.0 (0.75”)	4.0 (0.16”)	1/4-18 NPT	62.4 (2.46”)
PH-6-4N-TMS	3/8”	69.6 (2.74”)	25.7 (1.01”)	22.9 (0.90”)	21.0 (0.83”)	22.0 (0.87”)	25.4 (1.00”)	25.4 (1.00”)	6.0 (0.24”)	1/4-18 NPT	65.9 (2.59”)
PH-6-6N-TMS	3/8”	69.6 (2.74”)	25.7 (1.01”)	22.9 (0.90”)	21.0 (0.83”)	22.0 (0.87”)	25.4 (1.00”)	25.4 (1.00”)	6.0 (0.24”)	3/8-18 NPT	65.9 (2.59”)
PH-8-8N-TMS	1/2”	77.6 (3.06”)	26.7 (1.05”)	23.6 (0.93”)	22.0 (0.87”)	25.0 (0.98”)	28.6 (1.13”)	28.6 (1.13”)	8.0 (0.31”)	1/2-14 NPT	75.9 (2.99”)
PH-10-12N-TMS	5/8”	84.6 (3.33”)	29.7 (1.17”)	25.9 (1.02”)	25.0 (0.98”)	32.0 (1.26”)	34.9 (1.37”)	34.9 (1.37”)	12.0 (0.47”)	3/4-14 NPT	86.9 (3.42”)
PH-12-12N-TMS	3/4”	90.6 (3.57”)	35.6 (1.40”)	31.2 (1.23”)	29.5 (1.16”)	36.0 (1.42”)	38.1 (1.50”)	38.1 (1.50”)	14.0 (0.55”)	3/4-14 NPT	91.0 (3.58”)
PH-16-16N-TMS	*1”	100.3 (3.95”)	40.3 (1.59”)	34.8 (1.37”)	33.5 (1.32”)	50.0 (1.97”)	50.8 (2.00”)	47.6 (1.87”)	18.0 (0.71”)	1-11.5 NPT	109.7 (4.32”)

Metric

Part No.	Tube O.D.	A	B	C	D	E	F	G	Bore	Thread	Z
PH-M6-4N-TMS	6mm	67.4 (2.65”)	23.7 (0.93”)	20.9 (0.82”)	19.0 (0.75”)	17.0 (0.67”)	20.6 (0.81”)	19.0 (0.75”)	4.0 (0.16”)	1/4-18 NPT	62.4 (2.46”)
PH-M10-4N-TMS	10mm	69.6 (2.74”)	25.7 (1.01”)	22.9 (0.90”)	21.0 (0.83”)	22.0 (0.87”)	25.4 (1.00”)	25.4 (1.00”)	6.0 (0.24”)	1/4-18 NPT	65.9 (2.59”)
PH-M10-6N-TMS	10mm	69.6 (2.74”)	25.7 (1.01”)	22.9 (0.90”)	21.0 (0.83”)	22.0 (0.87”)	25.4 (1.00”)	25.4 (1.00”)	6.0 (0.24”)	3/8-18 NPT	65.9 (2.59”)
PH-M12-8N-TMS	12mm	77.7 (3.06”)	26.7 (1.05”)	23.6 (0.93”)	22.0 (0.87”)	25.0 (0.98”)	28.6 (1.13”)	28.6 (1.13”)	8.0 (0.31”)	1/2-14 NPT	75.9 (2.99”)
PH-M16-12N-TMS	16mm	84.6 (3.33”)	29.7 (1.17”)	25.9 (1.02”)	25.0 (0.98”)	32.0 (1.26”)	34.9 (1.37”)	34.9 (1.37”)	12.0 (0.47”)	3/4-14 NPT	86.9 (3.42”)
PH-M20-12N-TMS	20mm	90.6 (3.57”)	35.6 (1.40”)	31.2 (1.23”)	29.5 (1.16”)	36.0 (1.42”)	38.1 (1.50”)	38.1 (1.50”)	14.0 (0.55”)	3/4-14 NPT	91.0 (3.58”)
PH-M25-16N-TMS	*25mm	100.3 (3.95”)	40.3 (1.59”)	34.8 (1.37”)	33.5 (1.32”)	50.0 (1.97”)	50.8 (2.00”)	47.6 (1.87”)	18.0 (0.71”)	1-11.5 NPT	109.7 (4.32”)

Dimensions for reference only, subject to change.

To order, add material designator to part number above - *Example PH-M12-8N-TMS-SS*

Material	Stainless Steel	INCONEL® Alloy 625	INCOLOY® Alloy 825	Super Duplex
Designator	SS	625	825	SD

***1” and 25mm only available in 316 Stainless Steel**

Note: Termination connectors can only be assembled using the Tri-Tool®

Termination Female Straight - NPT

TFS - N
Termination Female Straight - NPT

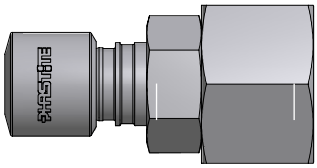

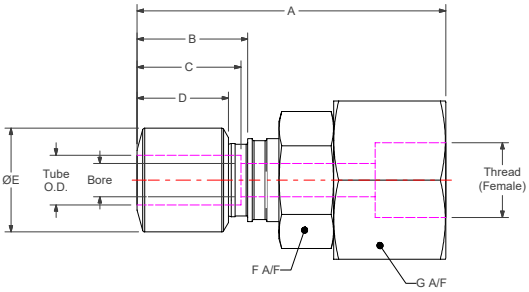

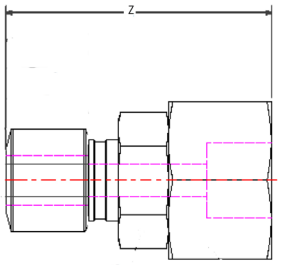

Imperial

Part No.	Tube O.D.	A	B	C	D	E	F	G	Bore	Thread	Z
PH-4-4N-TFS	1/4”	68.1 (2.68”)	23.7 (0.93”)	20.9 (0.82”)	19.0 (0.75”)	17.0 (0.67”)	20.6 (0.81”)	28.6 (1.13”)	4.0 (0.16”)	1/4-18 NPT	63.4 (2.50”)
PH-6-4N-TFS	3/8”	70.6 (2.78”)	25.7 (1.01”)	22.9 (0.90”)	21.0 (0.83”)	22.0 (0.87”)	25.4 (1.00”)	25.4 (1.00”)	6.0 (0.24”)	1/4-18 NPT	66.9 (2.63”)
PH-6-6N-TFS	3/8”	72.1 (2.84”)	25.7 (1.01”)	22.9 (0.90”)	21.0 (0.83”)	22.0 (0.87”)	25.4 (1.00”)	25.4 (1.00”)	6.0 (0.24”)	3/8-18 NPT	68.4 (2.69”)
PH-8-8N-TFS	1/2”	77.6 (3.06”)	26.7 (1.05”)	23.6 (0.93”)	22.0 (0.87”)	25.0 (0.98”)	28.6 (1.13”)	38.1 (1.50”)	8.0 (0.31”)	1/2-14 NPT	75.9 (2.99”)
PH-10-12N-TFS	5/8”	80.6 (3.18”)	29.7 (1.17”)	25.9 (1.02”)	25.0 (0.98”)	32.0 (1.26”)	34.9 (1.37”)	38.1 (1.50”)	12.0 (0.47”)	3/4-14 NPT	82.9 (3.26”)
PH-12-12N-TFS	3/4”	86.6 (3.41”)	35.6 (1.40”)	31.2 (1.23”)	29.5 (1.16”)	36.0 (1.42”)	38.1 (1.50”)	38.1 (1.50”)	14.0 (0.55”)	3/4-14 NPT	87.0 (3.43”)
PH-16-16N-TFS	*1”	95.3 (3.75”)	40.3 (1.59”)	34.8 (1.37”)	33.5 (1.32”)	50.0 (1.97”)	50.8 (2.00”)	47.6 (1.87”)	18.0 (0.71”)	1-11.5 NPT	105.0 (4.13”)

Metric

Part No.	Tube O.D.	A	B	C	D	E	F	G	Bore	Thread	Z
PH-M6-4N-TFS	6mm	68.4 (2.69”)	23.7 (0.93”)	20.9 (0.82”)	19.0 (0.75”)	17.0 (0.67”)	20.6 (0.81”)	28.6 (1.13”)	4.0 (0.16”)	1/4-18 NPT	63.4 (2.50”)
PH-M10-4N-TFS	10mm	70.6 (2.78”)	25.7 (1.01”)	22.9 (0.90”)	21.0 (0.83”)	22.0 (0.87”)	25.4 (1.00”)	25.4 (1.00”)	6.0 (0.24”)	1/4-18 NPT	66.9 (2.63”)
PH-M10-6N-TFS	10mm	72.1 (2.84”)	25.7 (1.01”)	22.9 (0.90”)	21.0 (0.83”)	22.0 (0.87”)	25.4 (1.00”)	25.4 (1.00”)	6.0 (0.24”)	3/8-18 NPT	68.4 (2.69”)
PH-M12-8N-TFS	12mm	77.7 (3.06”)	26.7 (1.05”)	23.1 (0.91”)	22.0 (0.87”)	25.0 (0.98”)	28.6 (1.13”)	38.1 (1.50”)	8.0 (0.31”)	1/2-14 NPT	75.9 (2.99”)
PH-M16-12N-TFS	16mm	80.6 (3.18”)	29.7 (1.17”)	25.9 (1.02”)	25.0 (0.98”)	32.0 (1.26”)	34.9 (1.37”)	38.1 (1.50”)	12.0 (0.47”)	3/4-14 NPT	82.9 (3.26”)
PH-M20-12N-TFS	20mm	86.6 (3.41”)	35.6 (1.40”)	31.0 (1.22”)	29.5 (1.16”)	36.0 (1.42”)	38.1 (1.50”)	38.1 (1.50”)	14.0 (0.55”)	3/4-14 NPT	87.0 (3.43”)
PH-M25-16N-TFS	*25mm	95.3 (3.75”)	40.3 (1.59”)	34.8 (1.37”)	33.5 (1.32”)	50.0 (1.97”)	50.8 (2.00”)	47.6 (1.87”)	18.0 (0.71”)	1-11.5 NPT	105.0 (4.13”)

Dimensions for reference only, subject to change.

To order, add material designator to part number above - *Example PH-4-4N-TFS-825*

Material	Stainless Steel	INCONEL® Alloy 625	INCOLOY® Alloy 825	Super Duplex
Designator	SS	625	825	SD

***1” and 25mm only available in 316 Stainless Steel**

Note: Termination connectors can only be assembled using the Tri-Tool®

Termination Male Straight - BSPP

TMS - R
Termination Male Straight - BSPP

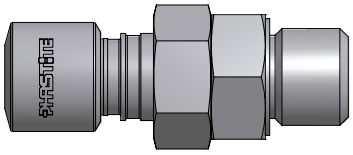

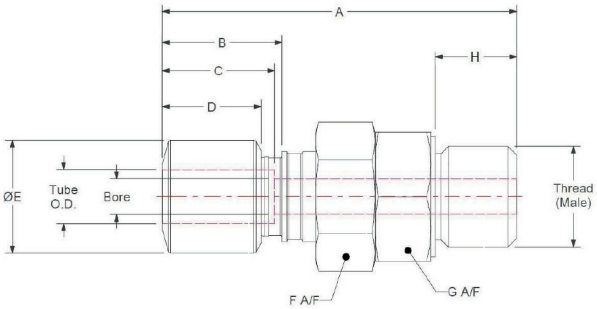

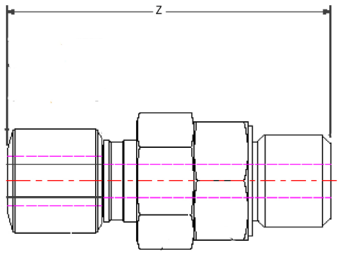

Imperial

Part No.	Tube O.D.	A	B	C	D	E	F	G	Bore	Thread	Z	H
PH-4-4R-TMS	1/4”	67.1 (2.64”)	23.7 (0.93”)	20.9 (0.82”)	19.0 (0.75”)	17.0 (0.67”)	20.6 (0.81”)	19.0 (0.75”)	4.0 (0.16”)	1/4-19 BSPP	62.4 (2.46”)	12.0 (0.47”)
PH-6-4R-TMS	3/8”	69.6 (2.74”)	25.7 (1.01”)	22.9 (0.90”)	21.0 (0.83”)	22.0 (0.87”)	25.4 (1.00”)	25.4 (1.00”)	6.0 (0.24”)	1/4-19 BSPP	65.9 (2.59”)	12.0 (0.47”)
PH-6-6R-TMS	3/8”	69.6 (2.74”)	25.7 (1.01”)	22.9 (0.90”)	21.0 (0.83”)	22.0 (0.87”)	25.4 (1.00”)	25.4 (1.00”)	6.0 (0.24”)	3/8-19 BSPP	65.9 (2.59”)	12.0 (0.47”)
PH-8-8R-TMS	1/2”	77.6 (3.06”)	26.7 (1.05”)	23.6 (0.93”)	22.0 (0.87”)	25.0 (0.98”)	28.6 (1.13”)	28.6 (1.13”)	8.0 (0.31”)	1/2-14 BSPP	75.9 (2.99”)	14.0 (0.55”)
PH-10-12R-TMS	5/8”	84.6 (3.33”)	29.7 (1.17”)	25.9 (1.02”)	25.0 (0.98”)	32.0 (1.26”)	34.9 (1.37”)	34.9 (1.37”)	12.0 (0.47”)	3/4-14 BSPP	86.9 (3.42”)	16.0 (0.63”)
PH-12-12R-TMS	3/4”	90.6 (3.57”)	35.6 (1.40”)	31.2 (1.23”)	29.5 (1.16”)	36.0 (1.42”)	38.1 (1.50”)	38.1 (1.50”)	14.0 (0.55”)	3/4-14 BSPP	91.0 (3.58”)	16.0 (0.63”)
PH-16-16R-TMS	*1”	100.3 (3.95”)	40.3 (1.59”)	34.8 (1.37”)	33.5 (1.32”)	50.0 (1.97”)	50.8 (2.00”)	47.6 (1.87”)	18.0 (0.71”)	1-11.5 BSPP	109.7 (4.32”)	18.0 (0.71”)

Metric

Part No.	Tube O.D.	A	B	C	D	E	F	G	Bore	Thread	Z	H
PH-M6-4R-TMS	6mm	67.4 (2.65”)	23.7 (0.93”)	20.9 (0.82”)	19.0 (0.75”)	17.0 (0.67”)	20.6 (0.81”)	19.0 (0.75”)	4.0 (0.16”)	1/4-19 BSPP	62.4 (2.46”)	12.0 (0.47”
PH-M10-4R-TMS	10mm	69.6 (2.74”)	25.7 (1.01”)	22.9 (0.90”)	21.0 (0.83”)	22.0 (0.87”)	25.4 (1.00”)	25.4 (1.00”)	6.0 (0.24”)	1/4-19 BSPP	65.9 (2.59”)	12.0 (0.47”
PH-M10-6R-TMS	10mm	69.6 (2.74”)	25.7 (1.01”)	22.9 (0.90”)	21.0 (0.83”)	22.0 (0.87”)	25.4 (1.00”)	25.4 (1.00”)	8.0 (0.31”)	3/8-19 BSPP	65.9 (2.59”)	12.0 (0.47”
PH-M12-8R-TMS	12mm	77.7 (3.06”)	26.7 (1.05”)	23.1 (0.91”)	22.0 (0.87”)	25.0 (0.98”)	28.6 (1.13”)	28.6 (1.13”)	8.0 (0.31”)	1/2-14 BSPP	75.9 (2.99”)	14.0 (0.55”
PH-M16-12R-TMS	16mm	84.6 (3.33”)	29.7 (1.17”)	25.9 (1.02”)	25.0 (0.98”)	32.0 (1.26”)	34.9 (1.37”)	34.9 (1.37”)	12.0 (0.47”)	3/4-14 BSPP	86.9 (3.42”)	16.0 (0.63”
PH-M20-12R-TMS	20mm	90.6 (3.57”)	35.6 (1.40”)	31.0 (1.22”)	29.5 (1.16”)	36.0 (1.42”)	38.1 (1.50”)	38.1 (1.50”)	14.0 (0.55”)	3/4-14 BSPP	91.0 (3.58”)	16.0 (0.63”
PH-M25-16R-TMS	*25mm	100.3 (3.95”)	40.3 (1.59”)	34.8 (1.37”)	33.5 (1.32”)	50.0 (1.97”)	50.8 (2.00”)	47.6 (1.87”)	18.0 (0.71”)	1-11 BSPP	109.7 (4.32”)	18.0 (0.71”)

Dimensions for reference only, subject to change.

To order, add material designator to part number above - *Example PH-M10-6R-TMS-SD*

Material	Stainless Steel	INCONEL® Alloy 625	INCOLOY® Alloy 825	Super Duplex
Designator	SS	625	825	SD

***1” and 25mm only available in 316 Stainless Steel**

Note: Termination connectors can only be assembled using the Tri-Tool®

Termination Female Straight - BSPP

TFS - R
Termination Female Straight - BSPP

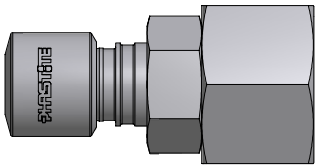

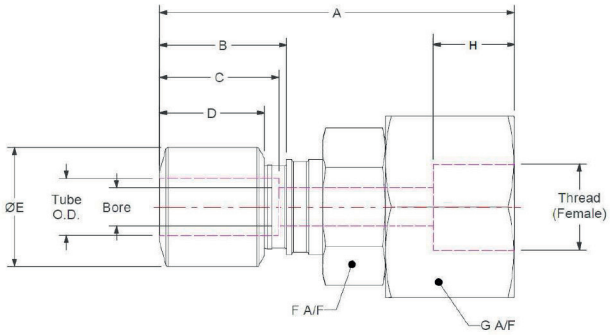

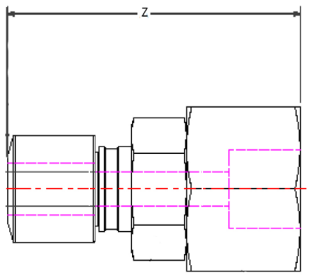

Imperial

Part No.	Tube O.D.	A	B	C	D	E	F	G	Bore	Thread	Z	H
PH-4-4R-TFS	1/4"	70.1 (2.76")	23.7 (0.93")	20.9 (0.82")	19.0 (0.75")	17.0 (0.67")	20.6 (0.81")	28.6 (1.13")	4.0 (0.16")	1/4-19 BSPP	65.4 (2.57")	15.0 (0.59")
PH-6-4R-TFS	3/8"	72.6 (2.86")	25.7 (1.01")	22.9 (0.90")	21.0 (0.83")	22.0 (0.87")	25.4 (1.00")	25.4 (1.00")	6.0 (0.24")	1/4-19 BSPP	68.9 (2.71")	15.0 (0.59")
PH-6-6R-TFS	3/8"	74.1 (2.92")	25.7 (1.01")	22.9 (0.90")	21.0 (0.83")	22.0 (0.87")	25.4 (1.00")	25.4 (1.00")	6.0 (0.24")	3/8-19 BSPP	70.4 (2.77")	15.0 (0.59")
PH-8-8R-TFS	1/2"	78.6 (3.10")	26.7 (1.05")	23.6 (0.93")	22.0 (0.87")	25.0 (0.98")	28.6 (1.13")	38.1 (1.50")	8.0 (0.31")	1/2-14 BSPP	76.9 (3.03")	18.0 (0.71")
PH-10-12R-TFS	5/8"	83.1 (3.27")	29.7 (1.17")	25.9 (1.02")	25.0 (0.98")	32.0 (1.26")	34.9 (1.37")	38.1 (1.50")	12.0 (0.47")	3/4-14 BSPP	85.4 (3.36")	20.0 (0.79")
PH-12-12R-TFS	3/4"	89.1 (3.51")	35.6 (1.40")	31.2 (1.23")	29.5 (1.16")	36.0 (1.42")	38.1 (1.50")	38.1 (1.50")	14.0 (0.55")	3/4-14 BSPP	89.5 (3.52")	20.0 (0.79")
PH-16-16R-TFS	*1"	96.3 (3.79")	40.3 (1.59")	34.8 (1.37")	33.5 (1.32")	50.0 (1.97")	50.8 (2.00")	47.6 (1.87")	18.0 (0.71")	1-11.5 BSPP	106.0 (4.17")	22.0 (0.87"

Metric

Part No.	Tube O.D.	A	B	C	D	E	F	G	Bore	Thread	Z	H
PH-M6-4R-TFS	6mm	70.4 (2.77")	23.7 (0.93")	20.9 (0.82")	19.0 (0.75")	17.0 (0.67")	20.6 (0.81")	28.6 (1.13")	4.0 (0.16")	1/4-19 BSPP	65.4 (2.57")	15.0 (0.59")
PH-M10-4R-TFS	10mm	72.6 (2.86")	25.7 (1.01")	22.9 (0.90")	21.0 (0.83")	22.0 (0.87")	25.4 (1.00")	25.4 (1.00")	6.0 (0.24")	1/4-19 BSPP	68.9 (2.71")	15.0 (0.59")
PH-M10-6R-TFS	10mm	74.1 (2.92")	25.7 (1.01")	22.9 (0.90")	21.0 (0.83")	22.0 (0.87")	25.4 (1.00")	25.4 (1.00")	8.0 (0.31")	3/8-19 BSPP	70.4 (2.77")	15.0 (0.59")
PH-M12-8R-TFS	12mm	78.7 (3.10")	26.7 (1.05")	23.1 (0.91")	22.0 (0.87")	25.0 (0.98")	28.6 (1.13")	38.1 (1.50")	8.0 (0.31")	1/2-14 BSPP	76.9 (3.03")	18.0 (0.71")
PH-M16-12R-TFS	16mm	83.1 (3.27")	29.7 (1.17")	25.9 (1.02")	25.0 (0.98")	32.0 (1.26")	34.9 (1.37")	38.1 (1.50")	12.0 (0.47")	3/4-14 BSPP	85.4 (3.36")	20.0 (0.79")
PH-M20-12R-TFS	20mm	89.1 (3.51")	35.6 (1.40")	31.0 (1.22")	29.5 (1.16")	36.0 (1.42")	38.1 (1.50")	38.1 (1.50")	14.0 (0.55")	3/4-14 BSPP	89.5 (3.52")	20.0 (0.79")
PH-M25-16R-TFS	*25mm	96.3 (3.79")	40.3 (1.59")	34.8 (1.37")	33.5 (1.32")	50.0 (1.97")	50.8 (2.00")	47.6 (1.87")	18.0 (0.71")	1-11 BSPP	106.0 (4.17")	22.0 (0.87"

Dimensions for reference only, subject to change.

To order, add material designator to part number above - *Example PH-4-4R-TFS-625*

Material	Stainless Steel	INCONEL® Alloy 625	INCOLOY® Alloy 825	Super Duplex
Designator	SS	625	825	SD

***1" and 25mm only available in 316 Stainless Steel**

Note: Termination connectors can only be assembled using the Tri-Tool®

Assembly Tools

Phastite® Tooling

Phastite's unique design provides a secure leak tight grip on the tubing. The connector make-up is completed using either a hand held tool or a bench mounted tool. The tools have built-in hydraulic cylinders actuated by a pump. The pumps can be driven pneumatically, electrically or manually. Please see Bulletin 5909 for tooling details and installation instructions. Servicing is required following 5,000, 10,000, 20,000 and 30,000 cycles.

Phastool® 3A
Hand Held Tool

For 1/4" (6mm), 3/8"(10mm) connections

For the smallest sizes of Phastite® a compact portable tool is available for ease of installation in confined spaces. The portable tool is supplied complete with a 12 ft (4 metre) hose and quick connectors. The unit is also supplied complete with hose guards and grips at both ends providing extra safety, vice mounts and all required inserts for assembling.

Part No: PH-3A-TOOL-BP
PH-3A-TOOL-HP

Note: BP denotes a battery operated hydraulic pump and HP denotes a hand operated hydraulic pump.

Basic dimensions of this tool are included for planning installations. For installation instructions, please view bulletin 5909. However for installation with limited access, it is advised to consult the factory for more information regarding jaw movement and access requirements.

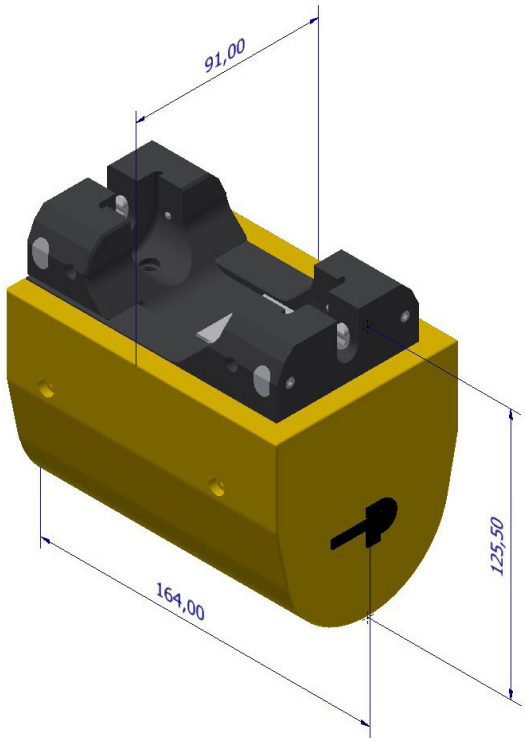

Phastool® 3A for 1/4" and 3/8" connections

Weight: 13lbs (6kg)

Tube Clearance

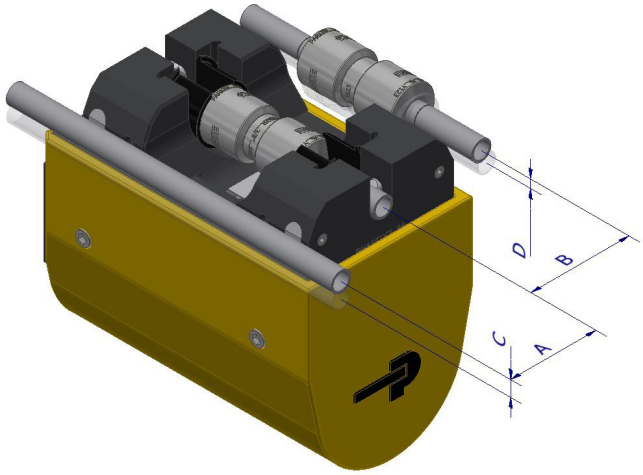

Tube / Fitting Size			A	B	C	D
Size	Imperial	Metric				
4	1/4"	6mm	40.2 (1.625")	45.5 (1.8125")	8.8 (0.375")	3.5 (0.125")
6	3/8"	10mm	41.8 (1.75")	48 (1.89")	7.5 (0.29")	4 (0.16")
8	1/2"	12mm	43.4 (1.75")	49.5 (2")	6.5 (0.25")	3.3 (0.125")
10	5/8"	16mm	44.9 (1.75")	53 (2.5")	5.6 (0.25")	1.8 (0.0625")
12	3/4"	20mm	46.5 (1.875")	55 (2.1875")	4.7 (0.1875")	1 (0.0625")
16	1"	25mm	49.7 (2")	63 (2.5")	3.2 (0.125")	0 (0")

A - Minimum gap between Phastool® centreline and tube run centreline.
B - Minimum gap between Phastool® centreline and Phastite® centreline.
C – Maximum height between Phastool® centreline and tube run centreline.
D – Maximum height between Phastool® centreline and Phastite® centreline.

Assembly Tools

Phastool® 3B

For 1/4” (6mm), 3/8” (10mm), 1/2” (12mm), 5/8” (16mm) connections

For medium sizes of Phastite® a larger portable tool is available for ease of installation. The portable tool is supplied complete with a 12 ft (4 metre) hose and quick connectors. The unit is also supplied complete with hose guards and grips at both ends providing extra safety, vice mounts and all required inserts for assembling ¼” [6mm], 3/8” [10mm], ½” [12mm] and 5/8” [16mm] permanent Phastite® connectors.

Part No: PH-3B-TOOL-BP
PH-3B-TOOL-HP

Note: BP denotes a battery operated hydraulic pump and HP denotes a manually operated

Basic dimensions of this tool are included for planning installations. For installation instructions, please view bulletin 5909. However for installation with limited access, it is advised to consult the factory for more information regarding jaw movement and access requirements.

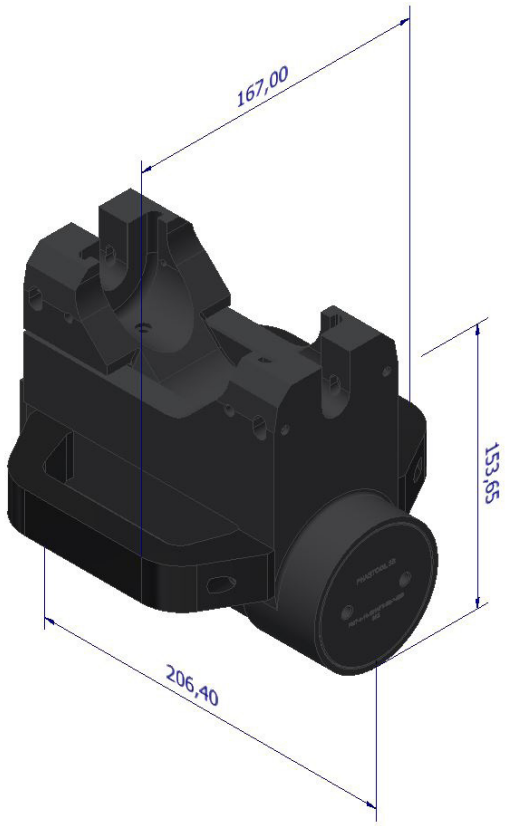

Phastool® 3B for 1/4” to 5/8” and 6mm to 16mm connections

Weight: 22 lbs. (9.5 Kg)

Tube Clearance

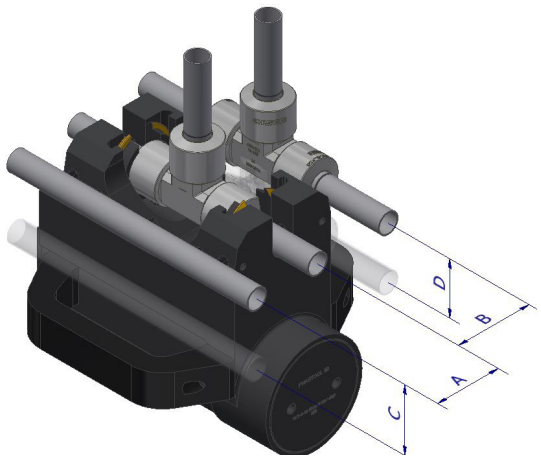

Tube / Fitting Size			A	B	C	D
Size	Imperial	Metric				
4	1/4”	6mm	43.8 (1.72”)	49.4 (1.94”)	53.8 (2.12”)	48.2 (1.90”)
6	3/8”	10mm	45.3 (1.78”)	51.9 (2.04”)	52.2 (2.06”)	45.7 (1.80”)
8	1/2”	12mm	46.9 (1.85”)	53.4 (2.10”)	50.6 (1.99”)	44.2 (1.74”)
10	5/8”	16mm	48.5 (1.91”)	56.8 (2.24”)	49.1 (1.93”)	40.7 (1.60”)
12	3/4”	20mm	49.5 (1.95”)	58 (2.28”)	47.5 (1.87”)	38.7 (1.52”)
16	1”	25mm	52.7 (2.07”)	65 (2.56”)	44.3 (1.74”)	31.7 (1.25”)

A - Minimum gap between Phastool® centreline and tube run centreline.
B - Minimum gap between Phastool® centreline and Phastite® centreline.
C – Maximum height between Phastool® centreline and tube run centreline.
D – Maximum height between Phastool® centreline and Phastite® centreline.

Vice Mounted Tool

The Phastool® is supplied with metallic vice guards for working with the tool in a vice. Each bench mount bracket has two mounting holes as shown: each hole is suited to take an M4 socket cap screw.

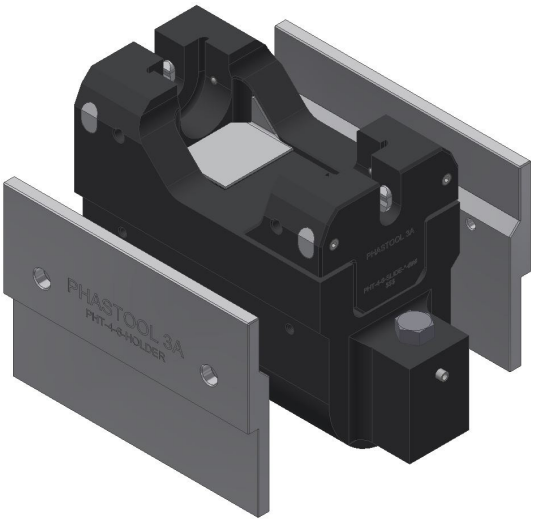

Phastool® 3A with vice guards.

Complete Package

The tools are supplied in protective travel cases, complete with all accessories.

- Phastite® assembly tool
- Full insert range for the tool supplied
- Hydraulic pump (battery or hand operated pump for Phastool® 3A and 3B – mains or hand operated pump for Tri-Tool®)
- Pump controller unit (battery and mains operated pumps)
- 2x 28V Battery packs (battery operated pumps)
- 110V – 230V battery chargers (battery operated pumps)
- Ergonomic hand grip (Phastool® 3A) handles (Phastool® 3B) with retaining screws and hex key
- Phastool® vice guards with cap head screws
- Vice guards (Phastool® 3A and 3B)
- Hydraulic hose with quick connects

Protective case

Assembly Tools

Tri-Tool® Bench Mount
For 1/4” (6mm) to 1” (25mm) connections.

The Tri-Tool® is ideal for all sizes of Phastite®. The bench tool is supplied complete with a 1.5 metre hoses (5ft) and quick connectors to suit a 3/8-14 NPT pump connections port.

The unit is also supplied complete with all required jaw inserts for assembling all Phastite® connectors including shapes and termination product from 1/4” (6mm) to 1”(5mm).

Terminition connectors can only be assembled using the Tri-Tool®.

Part No: PH-16-TOOL-MP

Weight: 71 lbs (32 Kg)

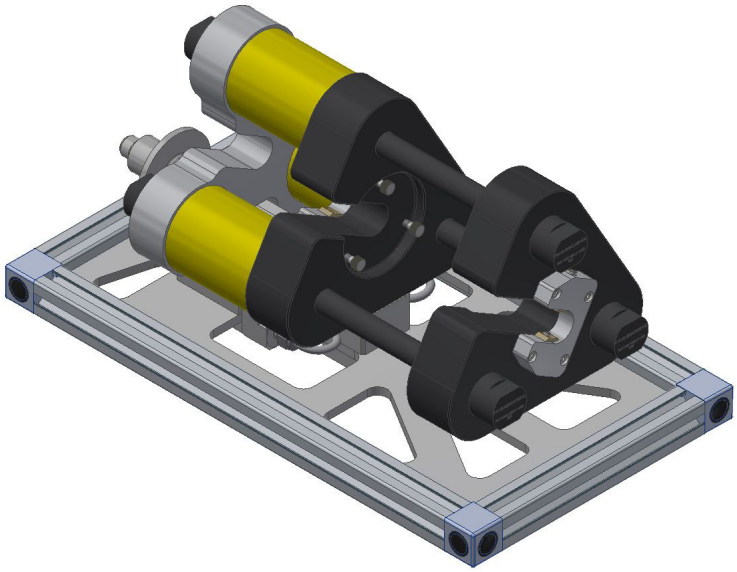

Tri-Tool® for connections 1/4 (6mm) to 1” (25mm)

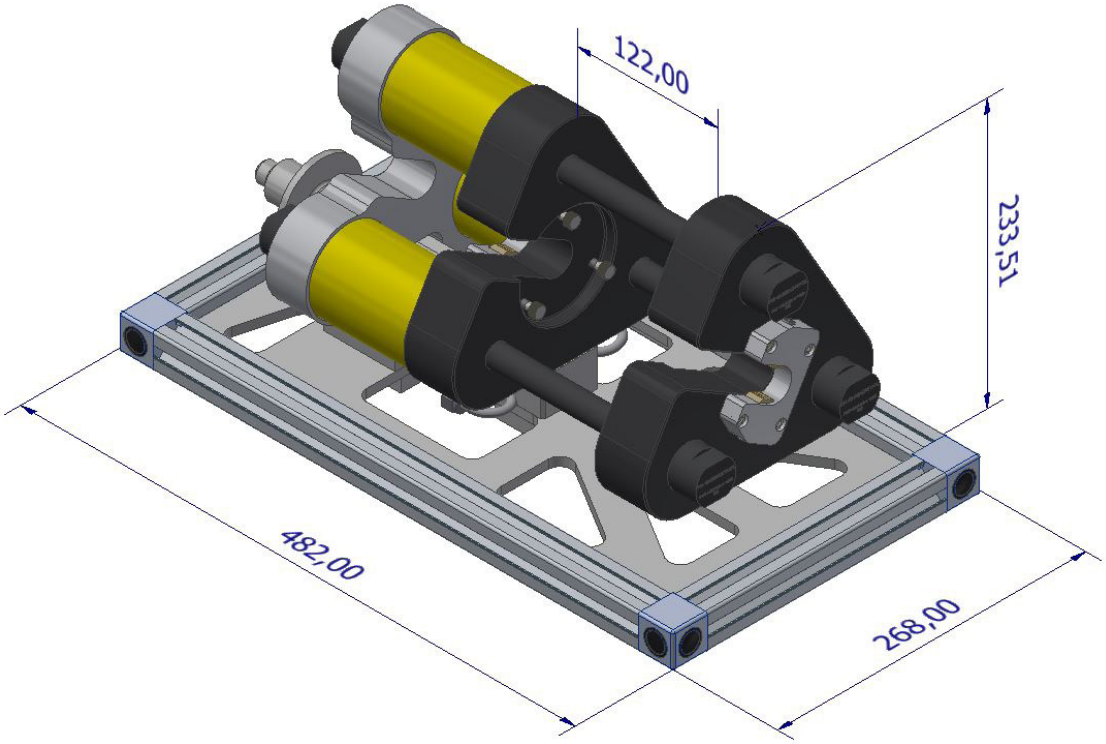

Basic dimensions of this tool are included for planning installations however for installation with limited access available it is advised to consult the factory for more information regarding jaw movement and access requirements.

Tool Jaw Inserts

A complete set of jaw inserts are included with each tool kit (hand held or bench mounted) to enable assembly of all sizes and shapes of Phastite®. Quick and easy interchangeable tooling inserts allows the Tri-Tool® to install connectors from sizes 1/4” to 1”. The insert selected is determined by the type of connector to be used and the size of the tubing. All inserts are etched with the part number and are colour coded. If additional inserts are required please use the information shown below.

Jaw inserts to suit hand held Phastool®

Tube Size O.D.	Tool	Part Number	Colour Code
1/4”	Phastool® 3A	PH-4-INSERTS-3A	GREY
	Phastool® 3B	PH-4-INSERTS-3B	
3/8”	Phastool® 3A	PH-6-INSERTS-3A	BLACK
	Phastool® 3B	PH-6-INSERTS-3B	
1/2”	Phastool® 3B	PH-8-INSERTS-3B	RED
5/8”	Phastool® 3B	PH-10-INSERTS-3B	YELLOW

Jaw inserts to suit Tri-Tool®

Tube Size O.D.	Tri-Tool Insert Part Number	Colour Code
1/4”	PH-M4-INSERTS-T16	GREY
3/8”	PH-M6-INSERTS-T16	BLACK
1/2”	PH-M8-INSERTS-T16	RED
5/8”	PH-M10-INSERTS-T16	YELLOW
3/4”	PH-M12-INSERTS-T16	BLUE
1”	PH-M16-INSERTS-T16	GREEN

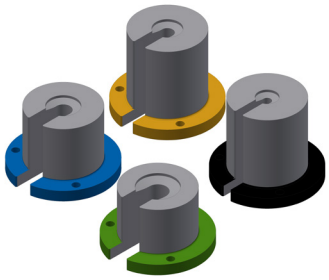

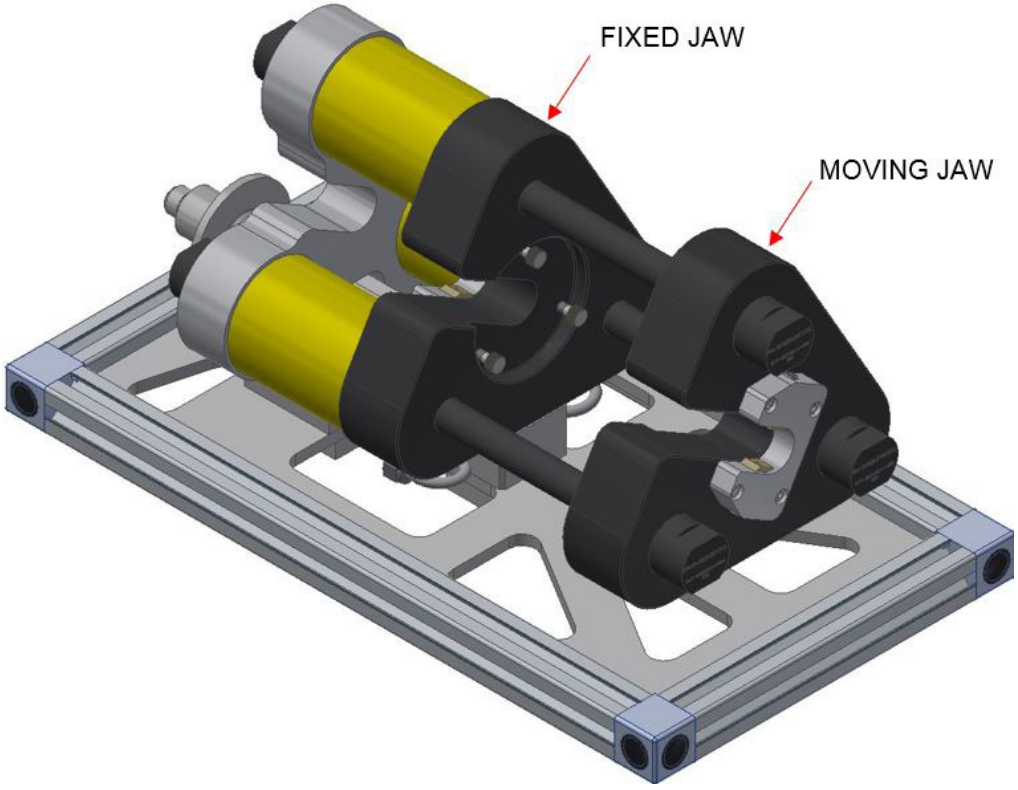

Tubemarkers

Adequate tube insertion is essential. To achieve this, Phastite® Tube Markers are available. The Phastite® tube marker generates two visible lines on to the outside diameter of the tube.

When inserting the tube into a Phastite® connector the two lines should not be visible. This ensures adequate tube insertion prior to assembly. After assembly only one of the lines will be visible, ensuring that tube slippage has not occurred during assembly.

Permanent Tube Marker

This style of tube marker generates two permanent lines onto the tube. These lines can be used for initial inspection during assembly and for future inspection. These tube markers generate the marks by means of a metallic ball bearing being rotated against the tube.

How to Order:

The correct part number is easily derived from the following number sequence.
Example: PH-4-TUBEMARKER

PH	4			TUBEMARKER
Series	**Tube Size**			**Item**
PH	Imperial	1/4”	4	TUBEMARKER
		3/8”	6	
		1/2”	8	
		5/8”	10	
		3/4”	12	
		1”	16	
	Metric	6mm	M6	
		10mm	M10	
		12mm	M12	
		16mm	M16	
		20mm	M20	
		25mm	M25	

Pumps

Lightweight Hand Pump

- For use with Phastool® 3A and 3B
- Lightweight and compact 9 lbs (4 Kg)
- Working pressure 10,000 psi (700 bar)
- Two speed operation reducing the number of handle strokes required
- Lower handle effort required to operate
- Handle lock and lightweight construction for easy carrying
- Internal pressure relief valve for overload protection
- Non-conductive fibre glass handle for operator safety

Lightweight hand pump.
Part number: PH-HP

Battery Operated Hydraulic Pump (BP)

- Supplied with hand held Phastool® 3A and 3B
- Driven by a powerful 28V long life battery
- Working pressure 10,000 psi (700 bar)
- Ergonomic lightweight design 20lbs (9 kg)
- Supplied with a shoulder strap
- Portable and user friendly
- Incorporates an automatic pressure relief and release valve

Battery Operated Hydraulic Pump.
Part number: PH-3-BP

Electric Hydraulic Pump (MP)

- For use with Tri-Tool®
- Lightweight and compact design 27 lbs (12 Kg)
- Large easy-carry handle for maximum portability
- Working pressure 10,000 psi (700 bar)
- Two-speed operation reduces cycle times for improved productivity
- High strength moulded shroud, with integral handle, protects motor from contamination and damage

Electric Hydraulic Pump.
Part number: PH-16-MP

Parker Worldwide

Europe, Middle East, Africa

AE – United Arab Emirates, Dubai
Tel: +971 4 8127100
parker.me@parker.com

AT – Austria, Wiener Neustadt
Tel: +43 (0)2622 23501-0
parker.austria@parker.com

AT – Eastern Europe, Wiener Neustadt
Tel: +43 (0)2622 23501 900
parker.easteurope@parker.com

AZ – Azerbaijan, Baku
Tel: +994 50 2233 458
parker.azerbaijan@parker.com

BE/LU – Belgium, Nivelles
Tel: +32 (0)67 280 900
parker.belgium@parker.com

BG – Bulgaria, Sofia
Tel: +359 2 980 1344
parker.bulgaria@parker.com

BY – Belarus, Minsk
Tel: +48 (0)22 573 24 00
parker.poland@parker.com

CH – Switzerland, Etoy
Tel: +41 (0)21 821 87 00
parker.switzerland@parker.com

CZ – Czech Republic, Klecany
Tel: +420 284 083 111
parker.czechrepublic@parker.com

DE – Germany, Kaarst
Tel: +49 (0)2131 4016 0
parker.germany@parker.com

DK – Denmark, Ballerup
Tel: +45 43 56 04 00
parker.denmark@parker.com

ES – Spain, Madrid
Tel: +34 902 330 001
parker.spain@parker.com

FI – Finland, Vantaa
Tel: +358 (0)20 753 2500
parker.finland@parker.com

FR – France, Contamine s/Arve
Tel: +33 (0)4 50 25 80 25
parker.france@parker.com

GR – Greece, Piraeus
Tel: +30 210 933 6450
parker.greece@parker.com

HU – Hungary, Budaörs
Tel: +36 23 885 470
parker.hungary@parker.com

IE – Ireland, Dublin
Tel: +353 (0)1 466 6370
parker.ireland@parker.com

IL – Israel
Tel: +39 02 45 19 21
parker.israel@parker.com

IT – Italy, Corsico (MI)
Tel: +39 02 45 19 21
parker.italy@parker.com

KZ – Kazakhstan, Almaty
Tel: +7 7273 561 000
parker.easteurope@parker.com

NL – The Netherlands, Oldenzaal
Tel: +31 (0)541 585 000
parker.nl@parker.com

NO – Norway, Asker
Tel: +47 66 75 34 00
parker.norway@parker.com

PL – Poland, Warsaw
Tel: +48 (0)22 573 24 00
parker.poland@parker.com

PT – Portugal
Tel: +351 22 999 7360
parker.portugal@parker.com

RO – Romania, Bucharest
Tel: +40 21 252 1382
parker.romania@parker.com

RU – Russia, Moscow
Tel: +7 495 645-2156
parker.russia@parker.com

SE – Sweden, Spånga
Tel: +46 (0)8 59 79 50 00
parker.sweden@parker.com

SK – Slovakia, Banská Bystrica
Tel: +421 484 162 252
parker.slovakia@parker.com

SL – Slovenia, Novo Mesto
Tel: +386 7 337 6650
parker.slovenia@parker.com

TR – Turkey, Istanbul
Tel: +90 216 4997081
parker.turkey@parker.com

UA – Ukraine, Kiev
Tel: +48 (0)22 573 24 00
parker.poland@parker.com

UK – United Kingdom, Warwick
Tel: +44 (0)1926 317 878
parker.uk@parker.com

ZA – South Africa, Kempton Park
Tel: +27 (0)11 961 0700
parker.southafrica@parker.com

North America

CA – Canada, Milton, Ontario
Tel: +1 905 693 3000

US – USA, Cleveland
Tel: +1 216 896 3000

Asia Pacific

AU – Australia, Castle Hill
Tel: +61 (0)2-9634 7777

CN – China, Shanghai
Tel: +86 21 2899 5000

HK – Hong Kong
Tel: +852 2428 8008

IN – India, Mumbai
Tel: +91 22 6513 7081-85

JP – Japan, Tokyo
Tel: +81 (0)3 6408 3901

KR – South Korea, Seoul
Tel: +82 2 559 0400

MY – Malaysia, Shah Alam
Tel: +60 3 7849 0800

NZ – New Zealand, Mt Wellington
Tel: +64 9 574 1744

SG – Singapore
Tel: +65 6887 6300

TH – Thailand, Bangkok
Tel: +662 186 7000

TW – Taiwan, Taipei
Tel: +886 2 2298 8987

South America

AR – Argentina, Buenos Aires
Tel: +54 3327 44 4129

BR – Brazil, Sao Jose dos Campos
Tel: +55 800 727 5374

CL – Chile, Santiago
Tel: +56 2 623 1216

MX – Mexico, Toluca
Tel: +52 72 2275 4200

© 2020 Parker Hannifin Corporation. All rights reserved

Catalogue 4235-PH TTP 06/20

Parker Hannifin Manufacturing Ltd
Instrumentation Products Division, Europe
Pottington Business Park
Barnstaple, Devon, EX31 1NP
United Kingdom
Tel.: +44 (0) 1271 313131
www.parker.com/ipd

Parker Hannifin Corporation
Instrumentation Products Division
1005 A Cleaner Way
Huntsville
AL 358050
United States of America
Tel.: +1 (256) 881 2040
www.parker.com/ipd

Authorized Distributor
MONILEK OILFIELD
E: sales@monilek.com
W: www.monilekgroup.com