Authorized Distributor
MONILEK OILFIELD

MONILEK OILFIELD

E: sales@monilek.com
W: www.monilekgroup.com

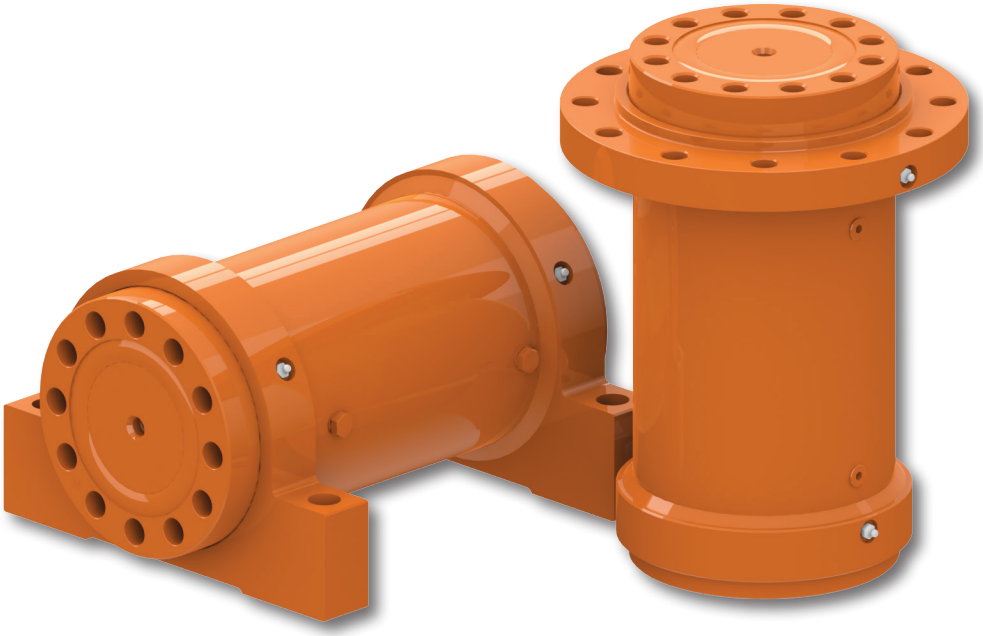

Helical Hydraulic Rotary Actuators

Series L and T

Parker

HELAC®

ENGINEERING YOUR SUCCESS.

Industries Served:

Agriculture
Construction
Energy
Marine
Material Handling
Military
Mining
Truck/Trailer
and many others

Helac's innovative sliding-spline technology converts linear piston motion into powerful shaft rotation. Each actuator is comprised of a housing and two moving parts — the central shaft and piston. Helical spline teeth on the shaft engage matching teeth on the piston's inside diameter. A second set of helical splines on the piston's outside diameter mesh with the gear in the housing.

Starting Position

The piston is completely bottomed out. Bars indicate starting positions of piston and shaft. The housing with integral gear remains stationary.

Ending Position

When hydraulic pressure is applied to the piston, it moves axially; while the helical gearing causes the piston and shaft to rotate simultaneously. Applying pressure to the opposite port will return the piston and shaft to their original starting positions.

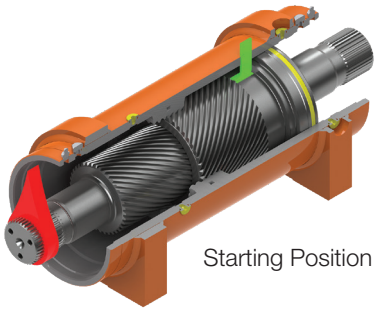

Starting Position

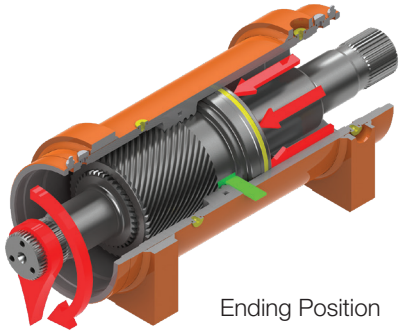

Ending Position

Parker Hannifin Corporation
Helac/Cylinder Division
Enumclaw, Washington USA

Features and Benefits

For over 50 years, Helac has lead the way in actuator technology and innovation. Our extensive line of compact and powerful rotary actuators offer simple and cost-effective solutions to move, support and position rotating loads in countless applications.

Helac actuators are designed to replace multiple components and function as a rotating device, mounting structure and bearing, all-in-one. They feature tremendous torque output and exceptional load bearing capability in compact dimensions.

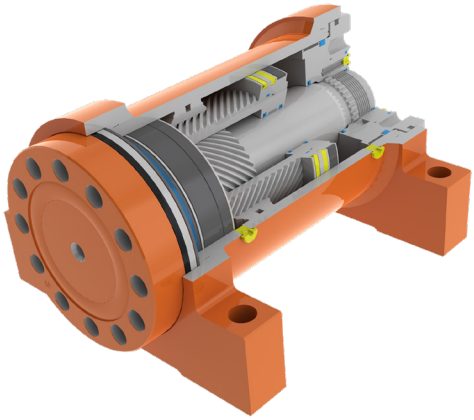

- **Powerful:** High torque, high bearing capacity
- **Durable:** Moving parts enclosed, suitable for harsh environments
- **Compact:** High power density, fits in tight spaces
- **Hold Position:** Zero internal leakage, smooth operation, no external brake required
- **Simplifies:** Eliminates bearings, linkages & brackets, reduces bill of materials, simplifies supply chain, assembly and maintenance
- **Backdrives in overload conditions:** Hydraulic fuse, prevents mechanical damage when properly equipped

Operating information L10 Series

Rotation	180° and 360°
Maximum Drive Torque:	3,000 to 25,000 in-lb
Maximum Holding Torque:	11,000 to 83,000 in-lb
Maximum Straddle Moment:	9,000 to 100,000 in-lb
Maximum Cantilever Moment:	9,000 to 100,000 in-lb
Mounting:	Flange

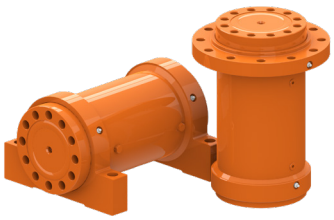

Operating information L30 Series

Rotation	180° and 360°
Maximum Drive Torque:	17,000 to 215,000 in-lb
Maximum Holding Torque:	43,600 to 520,000 in-lb
Maximum Straddle Moment:	119,000 to 1,505,000 in-lb
Maximum Cantilever Moment:	45,900 to 645,000 in-lb
Mounting:	Flange or Foot

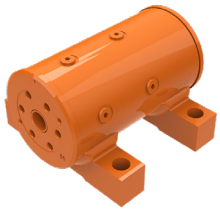

Operating information L20 Series

Rotation	180°
Maximum Drive Torque:	4,500 to 39,000 in-lb
Maximum Holding Torque:	11,800 to 93,200 in-lb
Maximum Straddle Moment:	22,500 to 280,000 in-lb
Maximum Cantilever Moment:	12,000 to 140,000 in-lb
Mounting:	Foot

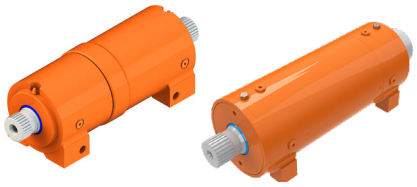

Operating information T Series

Rotation	200° and 220°
Maximum Drive Torque:	25,000 to 60,000 in-lb
Maximum Holding Torque:	54,200 to 127,000 in-lb
Maximum Straddle Moment:	37,500 to 90,000 in-lb
Mounting:	Foot

Parker Hannifin Corporation
Helac/Cylinder Division
Enumclaw, Washington USA

Torque Versus Hydraulic Pressure and Loads

The driving torque and holding torque are approximately linear with hydraulic pressure. As moment loads increase, drive torque may be reduced by up to 15%.

Torque vs. Pressure

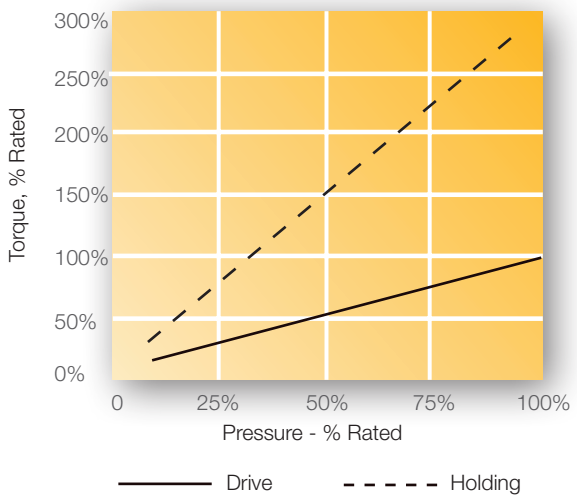

Torque vs. Moment

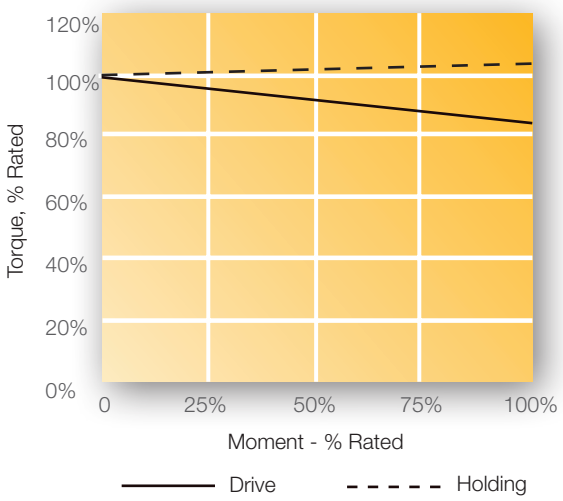

Specifications Reference Guide

Cantilever Mount

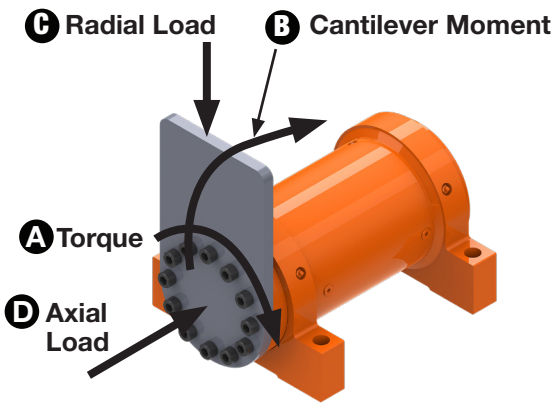

Straddle Mount

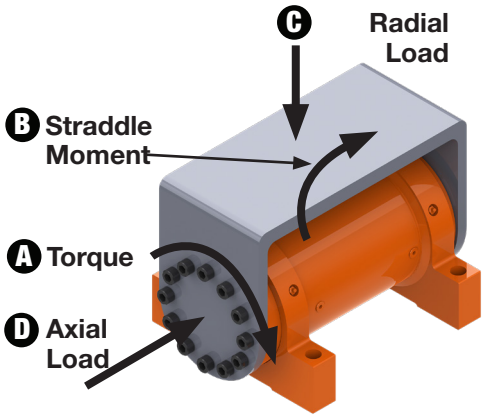

Digital Drawings can be provided in the following formats: .pdf, .stp, .dwg and .dxf. Email request to helacactuators@parker.com or call +1 800 327 2589 (US and Canada), or +1 360 825 1601 (Worldwide).

L10 - 25 - E - RF - 180 / 90 - S1 - 0 - H

Actuator Series

L10
L20
L30
T20
T30

Model

L10: 3.0, 5.5, 9.5, 15, 25

L20: 4.5, 8.2, 15, 25, 39

L30: 17, 25, 42, 65, 95, 125, 165, 215

T20: 25, 45, 60

T30: 27

Measurement System

E English System
M Metric System
ES or MS Custom Design***

Housing Configuration

L10: RF Rear Flange
L20: FT Foot Mount
L30: FT Foot Mount
FF Front Flange
T20: FT Foot Mount
T30: FT Foot Mount

Standard Rotation

L10: 180 180 Degrees
360 360 Degrees
L10-9.5 185° or 360° only
L20: 180 180 Degrees
L30: 180 180 Degrees
360 360 Degrees
T20: 220 220 Degrees
T20-60 200° only
T30: 220 220 Degrees

Special Rotation

Standard design with internal stop tube to limit rotation - indicates final rotation.***

Shaft/ End cap Configuration

L10: S1 Mounting holes in shaft flange only
L20: S1 Mounting holes in shaft flange with through-hole for tie rod
(4.5, 8.2, and 15k models)
L20: S2 Mounting holes in shaft and end cap flanges (25 and 39k models)
L30: S1 Mounting holes in shaft flange only***
L30: S2 Mounting holes in shaft and end cap flanges
T20/T30: DS Dual Spline

Valve Options

C Counterbalance Valve***
0 No Valve

Seals

H Standard Seals and Bearings
S Special Seals and Bearings***

*****Subject to minimum annual order quantities. Not all possible configurations available in small quantities. Consult factory.**

The Model Code defines standard configurations of our actuators. Please contact Parker Hannifin Corporation for special requirements.

Customized Products

Parker Hannifin Corporation can customize our rotary actuators to meet unique application requirements. Custom engineering can range from slight to complete, and is offered to those customers whose actuator needs match our program requirements.

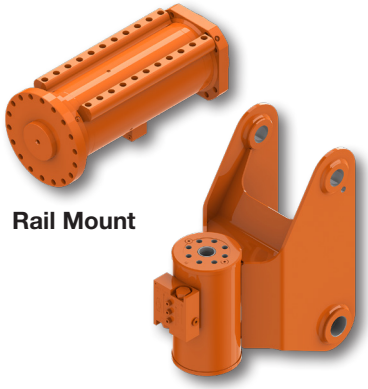

Rail Mount

Clevis Mount

Cantilever Mount

The load is mounted to the shaft flange and is supported at only one end of the shaft. Cantilever mounting is not recommended for aerial work platforms or other critical and safety-related applications.

Straddle Mount

The load is supported at both ends of the shaft.

L10 Series

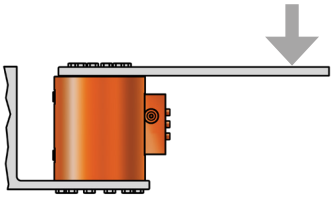

Cantilever Mount

L20 Series

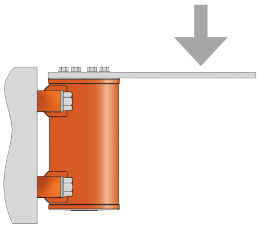

Cantilever Mount

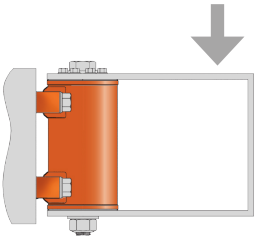

Straddle Mount

The upper portion of the bracket is bolted to the shaft flange. The lower portion is secured either by a tie rod passed through the shaft bore or is bolted to the endcap flange.

L30 Series

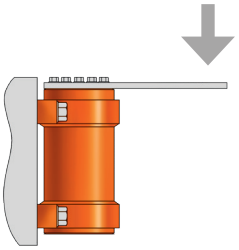

Cantilever Mount

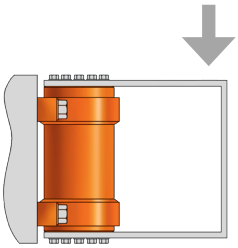

Straddle Mount

The upper portion of the bracket is bolted to the shaft flange, the lower portion is bolted to the endcap flange.

WARNING: Improper selection, installation, or use of Helac products or systems may result in failure and cause death, personal injury or property damage.

Optional factory mounted counterbalance valves prevent rotation in the event of a hydraulic line failure, control rotation when loads go over center, and protect the actuator against excessive torque loads.

L10 with counterbalance valve

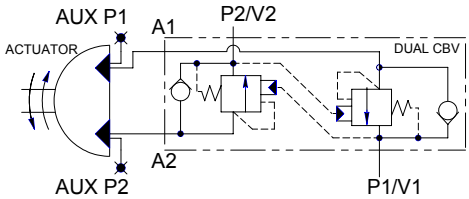

Hydraulic Schematic of Optional Counterbalance Valve

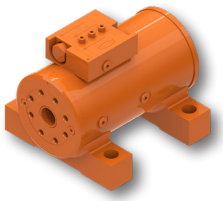

L20 with counterbalance valve

L10 and L20 Series

Manufactured from aluminum, the valve blocks are bolted to a flat mounting pad on the actuator housing. Three bolts secure the valve block to the actuator. See specification pages for valve location.

The pilot ratio is 3:1. The valves are set to relieve at 3300 psi ±300 psi (228 bar ±21 bar).

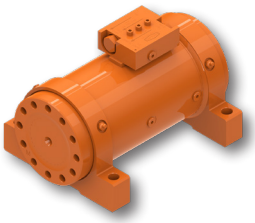

L30 with counterbalance valve, no tube (select models only)

L30 Series

Standard Valve for L30-17 and L30-25 180 Degree Models

Manufactured from aluminum, the valve blocks are bolted to a flat mounting pad on the actuator housing. Three bolts secure the valve block to the actuator. See specification pages for valve location.

The pilot ratio is 3:1. The valves are set to relieve at 3300 psi ±300 psi (228 bar ±21 bar).

L30 with counterbalance valve, with tube (select models only)

Standard Valve for all other L30 Series Actuators

Manufactured from ductile iron, the valve blocks are bolted to a flat mounting pad on the actuator housing, usually over port P1. Factory installed steel tubing connects the valve to port P2. Valve locations and plumbing routing differ among sizes. See specification pages for details.

The pilot ratio is 2.5:1. The valves are set to relieve at 3,625 psi ±360 psi (250 bar
±25 bar).

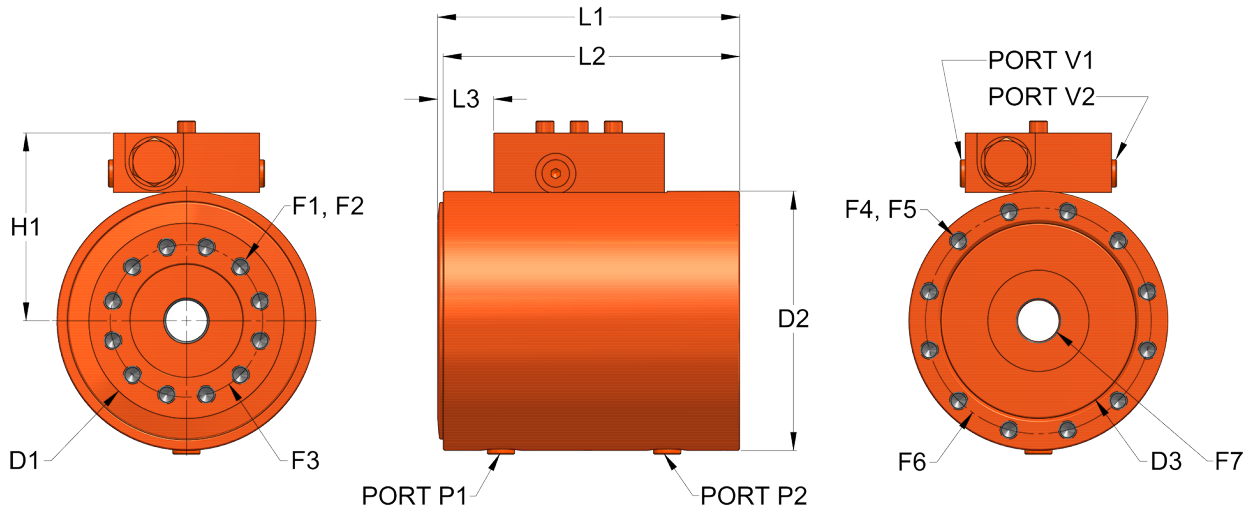

Shaft Flange **Housing Flange**

Model	Drive Torque in-lb @ 3,000 psi (Nm @ 207 bar)	Holding Torque in-lb @ 3,000 psi (Nm @ 207 bar)	Moment Capacity Cantilever Mount in-lb (Nm)	Radial Capacity lb (kg)	Axial Capacity lb (kg)	Displacement 180° in^3 (cm^3)	Displacement 360° in^3 (cm^3)	Approximate Weight 180° lb (kg)	Approximate Weight 360° lb (kg)
3.0	3,000 (339)	11,000 (1 243)	9,000 (1 017)	3,000 (1 361)	3,000 (1 361)	7.40 (121.3)	14.80 (242.5)	22.0 (10.0)	28.0 (12.7)
5.5	5,500 (622)	17,000 (1 921)	20,000 (2 260)	4,000 (1 814)	4,000 (1 814)	11.7(191.7)	23.40 (383.5)	31.0 (14.1)	42.0 (19.1)
9.5*	9,500 (1 074)	34,000 (3 842)	50,000 (5 650)	8,000 (3 629)	8,000 (3 629)	22.3 (365.4)	44.70 (732.5)	57.0 (25.9)	77.0 (34.9)
15	15,000 (1 695)	50,000 (5 650)	80,000 (9 040)	11,000 (4 990)	11,000 (4 990)	33.7 (552.2)	67.40 (1 104.5)	95.0 (43.1)	120 (54.4)
25	25,000 (2 825)	83,000 (9 379)	100,000 (11 300)	15,000 (6 804)	15,000 (6 804)	55.8 (914.4)	111.60 (1 828.8)	125 (56.7)	183 (83.0)

*L10-9.5 185°

Specification charts are for general reference only. Consult drawings for actual values and tolerances.

Model	D1 Shaft mounting surface diameter in (mm)	D2 Housing diameter in (mm)	D3 Mounting flange inside diameter in (mm)	F1 Threaded mounting hole, shaft flange in, deep (metric, deep)	F2 Quantity of mounting hole, shaft flange	F3 Bolt circle diameter, shaft flange in (mm)	F4 Threaded mounting hole, housing flange in, deep (metric, deep)	F5 Quantity of mounting holes, housing flange	F6 Bolt circle diameter, housing flange in (mm)	F7 Shaft through-hole diameter in (mm)
3.0	3.50 (89)	4.70 (119)	3.66 (93)	5/16-18 ↧0.50 (M8 x 1.25 ↧12)	8	2.875 (73.0)	5/16-18 ↧0.50 (M8 x 1.25 ↧12)	8	4.063 (103)	0.66 (17)
5.5	4.00 (102)	5.30 (135)	4.12 (105)	3/8-16 ↧0.63 (M10 x 1.5 ↧15.2)	12	3.125 (80.0)	3/8-16 ↧0.63 (M10 x 1.5 ↧18)	12	4.625 (117)	.84 (21.4)
9.5*	5.00 (127)	6.70 (170)	5.28 (134)	1/2-13 ↧0.75 (M12 x 1.75 ↧19.1)	12	4.000 (102)	1/2-13 ↧0.75 (M12 x 1.75 ↧19.1)	12	5.938 (151)	1.41 (35.7)
15	5.81 (148)	7.80 (198)	6.16 (157)	1/2-13 ↧0.75 (M12 x 1.75 ↧19.1)	12	5.000 (127)	1/2-13 ↧0.75 (M12 x 1.75 ↧19.1)	12	6.875 (175)	1.80 (45.7)
25	7.27 (185)	8.90 (226)	7.32 (186)	5/8-11 ↧1.00 (M16 x 2 ↧25.4)	12	5.500 (140)	1/2-13 ↧0.75 (M12 x 1.75 ↧19.1)	12	8.000 (203)	2.63 (66.7)

Model	H1 Centerline to valve top in (mm)	L1 Overall Length 180° in (mm)	L1 Overall Length 360° in (mm)	L2 Overall Length, non-rotating 180° in (mm)	L2 Overall Length, non-rotating 360° in (mm)	L3 Shaft flange to counterbalance valve 180° in (mm)	L3 Shaft flange to counterbalance valve 360° in (mm)
3.0	3.53 (89.7)	5.63 (143)	7.45 (189)	5.58 (142)	7.40 (188)	1.06 (26.9)	0.89 (22.6)
5.5	3.85 (97.8)	6.13 (156)	8.35 (212)	6.08 (154)	8.30 (211)	1.09 (27.7)	0.97 (24.6)
9.5	4.53 (115)	7.25 (184)*	10.15 (258)	7.17 (182)*	10.07 (256)	1.10 (27.9)*	1.68 (42.7)
15	5.07 (129)	8.83 (224)	12.25 (311)	8.72 (221)	12.14 (308)	1.52 (38.6)	2.37 (60.2)
25	5.63 (143)	9.50 (241)	13.64 (346)	9.40 (239)	13.54 (344)	1.73 (43.9)	2.77 (70.4)

Model	P1, P2 Ports, housing inch (metric)	V1, V2 Ports, valve inch (metric)
3.0	ISO-11926/SAE Series of ports. Sizes are 7/16. (ISO-1179-1/BSPP 'G' Series of ports. Sizes are 1/8.) See drawings for details.	ISO-11926/SAE Series of ports. Sizes are 7/16. (ISO-1179-1/BSPP 'G' Series of ports. Sizes are 1/8.) See drawings for details
5.5		
9.5*		
15		
25		

*L10-9.5 185°

Specification charts are for general reference only. Consult drawings for actual values and tolerances.

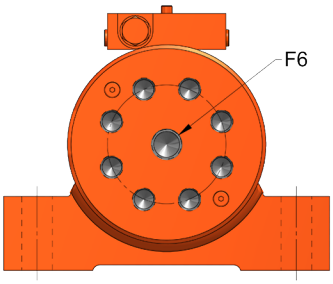

L20-25, 39 Shaft Flange

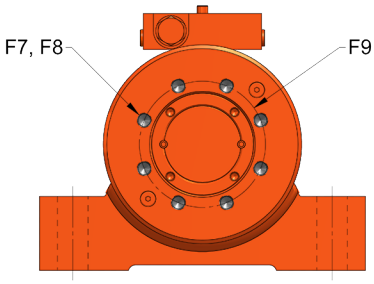

L20-25, 39 Endcap

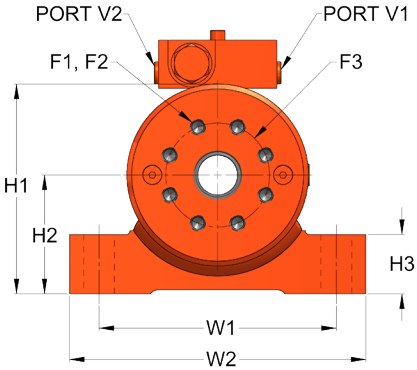

L20-4.5, 8.2, 15 Shaft Flange

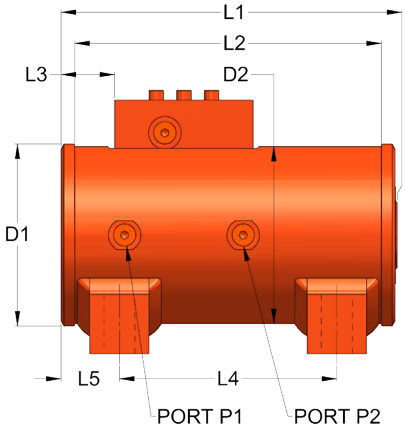

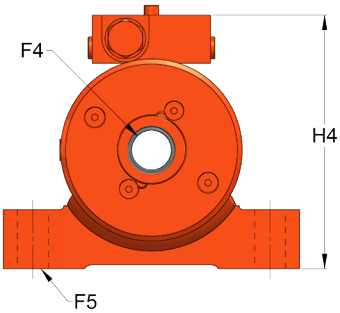

L20-4.5, 8.2, 15 Endcap

Model	Drive Torque in-lb @ 3,000 psi (Nm @ 207 bar)	Holding Torque in-lb @ 3,000 psi (Nm @ 207 bar)	Moment Capacity Straddle in-lb (Nm)	Moment Capacity Cantilever in-lb (Nm)	Radial Capacity lb (kg)	Axial Capacity lb (kg)	Displacement 180° in^3 (cm^3)	Approximate Weight lb (kg)
4.5	4,500 (509)	11,800 (1 333)	22,500 (2 543)	12,000 (1 356)	3,050 (1 383)	1,100 (499)	8.05 (131.9)	27.0 (12.2)
8.2	8,200 (927)	21,000 (2 373)	40,000 (4 520)	22,000 (2 486)	4,700 (2 132)	1,500 (680)	14.3 (234.3)	37.0 (16.8)
15	15,000 (1 695)	38,720 (4 375)	90,000 (10 170)	48,000 (5 424)	9,230 (4 187)	2,200 (998)	26.6 (435.9)	66.0 (29.9)
25	25,000 (2 825)	62,900 (7 108)	200,000 (22 597)	100,000 (11 300)	12,300 (5 579)	3,100 (1 406)	44.3 (725.9)	113 (51.3)
39	39,000 (4 407)	93,200 (10 532)	280,000 (31 640)	140,000 (15 820)	21,000 (9 526)	3,900 (1 769)	65.7 (1 076.6)	169 (76.7)

Specification charts are for general reference only. Consult drawings for actual values and tolerances.

Parker Hannifin Corporation
Helac/Cylinder Division
Enumclaw, Washington USA

Model	D1 Shaft and endcap flange diameter in (mm)	D2 Housing diameter in (mm)	F1 Threaded mounting hole, shaft flange in, deep (metric, deep)	F2 Quantity of mounting hole, shaft flange	F3 Bolt circle diameter, shaft flange in (mm)	F4 Clearance hole for shaft through-bolt (S1) in (metric)	F5 Housing foot clearance hole, required bolt size in (mm)	F6 Shaft center threaded hole in, deep (metric, deep)	F7 Threaded mounting hole, endcap flange (S2) in deep (metric deep)	F8 Quantity of mounting holes, endcap flange (S2)
4.5	4.10 (104)	4.00 (101)	3/8-16 ↧0.54 (M10 x 1.5 ↧12.7)	6	2.125 (53.9)	3/4 through (M20 through)	5/8 (M16)	- -	- -	-
8.2	4.60 (117)	4.50 (114)	3/8-16 ↧0.54 (M10 x 1.5 ↧15.2)	8	2.625 (65)	1 through (M24 through)	3/4 (M20)	- -	- -	-
15	5.60 (142)	5.50 (139)	1/2-13 ↧0.75 (M12 x 1.75 ↧19.1)	8	3.375 (85)	1 through (M24 through)	1 (M24)	- -	- -	-
25	6.70 (170)	6.50 (165)	3/4-10 ↧1.13 (M20 x 2.5 ↧30)	8	4.000 (102)	- -	1 (M24)	1-8 ↧2.00 (M24 x 3 ↧25)	1/2-13 ↧0.75 (M12 x ↧1.75 18)	8
39	7.70 (196)	7.75 (191)	3/4-10 ↧1.25 (M20 x 2.5 ↧28)	10	4.750 (121)	- -	1 1/4 (M30)	1- 1/4-7 ↧2.00 (1- 1/4-7 X ↧2.00)	5/8-11 ↧0.94 (M16 X ↧2 23)	10

Model	F9 Bolt circle diameter, endcap flange (S2) in (mm)	H1 Overall height (excluding valve) in (mm)	H2 Height to centerline in (mm)	H3 Foot height in (mm)	H4 Overall height (with valve) in (mm)	L1 Overall Length in (mm)	L2 Overall Length, non-rotating in (mm)	L3 Shaft flange to counterbalance valve in (mm)	L4 Mounting length in (mm)	L5 Shaft flange to mounting hole in (mm)
4.5	-	4.67 (119)	2.60 (66.0)	1.35 (34.3)	5.76 (146)	7.40 (188)	6.80 (173)	1.26 (32)	4.38 (111)	1.49 (37.9)
8.2	-	5.32 (135)	3.00 (76.2)	1.5 (38.1)	6.41 (163)	8.50 (216)	7.76 (197)	1.36 (34.5)	5.50 (140)	1.48 (37.6)
15	-	6.21 (158)	3.38 (85.9)	1.75 (44.5)	7.28 (185)	9.75 (248)	9.01 (229)	1.76 (44.7)	6.00 (152)	1.85 (47)
25	4.25 (108)	7.60 (1.93)	4.25 (108)	2.50 (63.5)	8.66 (220)	11.75 (298)	10.87 (276)	1.92 (48.8)	7.25 (184)	2.25 (57.2)
39	4.75 (121)	8.60 (218)	4.75 (121)	2.75 (70)	9.65 (245)	13.25 (337)	12.37 (314)	1.93 (49)	8.50 (216)	2.38 (60.5)

Model	W1 Mounting width in (mm)	W2 Overall width in (mm)	P1, P2 Ports, housing inch (metric)	V1, V2 Ports, valve inch (metric)
4.5	5.50 (145)	7.00 (178)	ISO-11926/SAE Series of ports. Sizes are 7/16. See drawings for details	ISO-11926/SAE Series of ports. Sizes are 7/16. See drawings for details
8.2	6.00 (152)	7.50 (191)		
15	7.75 (197)	9.75 (248)		
25	8.75 (222)	11.00 (279)		
39	10.50 (267)	13.00 (330)		

Specification charts are for general reference only. Consult drawings for actual values and tolerances.

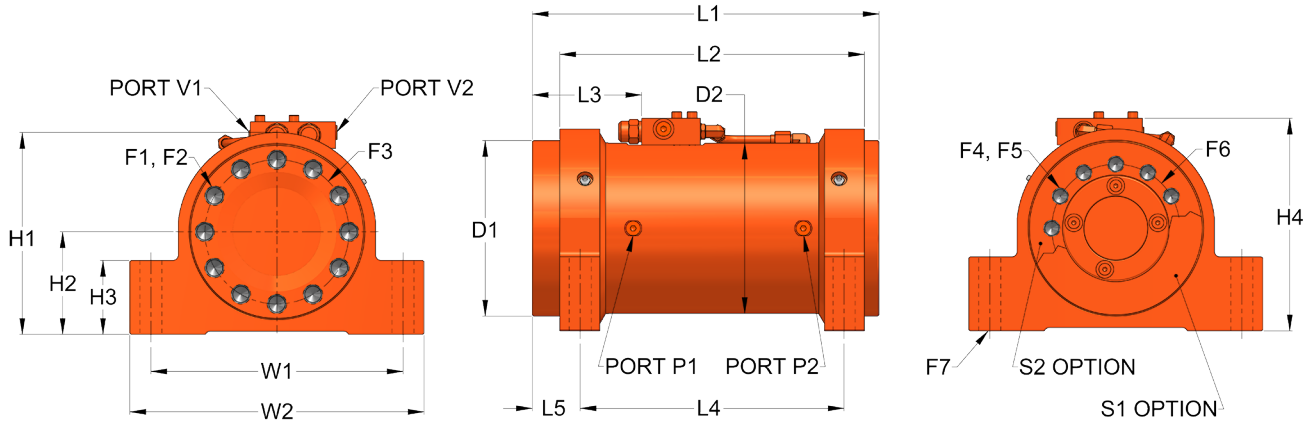

Shaft Flange **Endcap Flange**

L30 Foot Mount Specifications

Model	Drive Torque in-lb @ 3,000 psi (Nm @ 207 bar)	Holding Torque in-lb @ 3,000 psi (Nm @ 207 bar)	Moment Capacity Cantilever Mount in-lb (Nm)	Moment Capacity Straddle Mount 180° in-lb (Nm)	Moment Capacity Straddle Mount 360° in-lb (Nm)	Radial Capacity lb (kg)	Axial Capacity lb (kg)
17	17,000 (1 921)	43,600 (4 927)	45,900 (5 187)	119,000 (13 447)	170,000 (19 210)	4,000 (1 814)	3,000 (1 361)
25	25,000 (2 825)	60,400 (6 825)	62,500 (7 063)	150,000 (16 950)	218,000 (24 634)	5,000 (2 268)	4,000 (1 814)
42	42,000 (4 746)	103,000 (11 639)	105,000 (11 865)	273,000 (30 849)	402,000 (45 426)	8,000 (3 629)	6,000 (2 722)
65	65,000 (7 345)	162,000 (18 306)	162,500 (18 363)	423,000 (47 799)	630,000 (71 190)	11,000 (4 990)	8,000 (3 629)
95	95,000 (10 735)	232,000 (26 216)	261,250 (29 521)	665,000 (75 145)	987,000 (111 531)	15,000 (6 804)	10,000 (4 536)
125	125,000 (14 125)	306,000 (34 578)	343,750 (38 844)	875,000 (98 875)	1,295,000 (146 335)	18,000 (8 165)	13,000 (5 897)
165	165,000 (18 645)	404,000 (45 652)	495,000 (55 935)	1,155,000 (130 515)	1,750,000 (197 750)	22,000 (9 979)	15,000 (6 804)
215	215,000 (24 295)	520,000 (58 760)	645,000 (72 885)	1,505,000 (170 065)	2,270,000 (256 510)	26,000 (11 794)	18,000 (8 165)

Model	Displacement 180° in^3 (cm^3)	Displacement 360° in^3 (cm^3)	Approximate Weight 180° lb (kg)	Approximate Weight 360° lb (kg)
17	29.8 (488.3)	60.0 (983.2)	76.0 (34.5)	100 (45.4)
25	42.5 (696.5)	85.0 (1,392.9)	110 (49.9)	140 (63.5)
42	72.2 (1,183.1)	144 (2,359.7)	160 (72.6)	220 (99.8)
65	114 (1,868.1)	228 (3,736.3)	240 (108.9)	310 (140.6)
95	164 (2,687.5)	327 (5,358.6)	360 (163.3)	450 (204.1)
125	216 (3,539.6)	432 (7,079.2)	490 (222.3)	630 (285.8)
165	284 (4,653.9)	569 (9,324.3)	610 (276.7)	810 (367.4)
215	366 (5,997.7)	732 (11,995.4)	790 (358.3)	1,000 (453.6)

Specification charts are for general reference only. Consult drawings for actual values and tolerances.

Model	D1 Shaft and endcap flange diameter in (mm)	D2 Housing diameter in (mm)	F1 Threaded mounting hole, shaft flange in, deep (metric, deep) (F2 Quantity of mounting holes: 12)	F3 Bolt circle diameter, shaft flange in (mm)	F4 Threaded mounting hole, endcap flange, S2 in, deep (metric, deep) (F5 Quantity of mounting holes: 12)	F6 Bolt circle diameter, endcap flange in (mm)	F7 Housing foot clearance hole, required bolt size in (mm)
17	5.47 (139)	5.50 (140)	1/2-13 ↧0.75 (M12 x 1.75 ↧18)	4.50 (115)	3/8-16 ↧0.56 (M10 x 1.5 ↧15)	4.25 (108)	5/8 (M16)
25	6.09 (155)	6.00 (152)	5/8-11 ↧0.94 (M16 x 2 ↧23.9)	5.00 (125)	1/2-13 ↧0.75 (M12 x 1.75 ↧18)	4.75 (120)	3/4 (M20)
42	7.22 (183)	7.00 (178)	3/4-10 ↧1.13 (M20 x 2.5 ↧30)	5.88 (150)	5/8-11 ↧0.94 (M16 x 2 ↧23.9)	5.25 (133)	7/8 (M22)
65	8.22 (209)	8.00 (203)	7/8-9 ↧1.31 (M22 x 2.5 ↧33)	6.75 (170)	3/4-10 ↧1.13 (M20 x 2.5 ↧30)	6.00 (150)	1 (M24)
95	9.22 (234)	9.00 (229)	1-8 ↧1.38 (M24 x 3 ↧36.1)	7.75 (195)	7/8-9 ↧1.31 (M22 x 2.5 ↧33)	6.75 (170)	1 1/8 (M27)
125	10.34 (263)	10.0 (254)	1 1/8-7 ↧1.69 (M27 x 3 ↧40.6)	8.50 (215)	1-8 ↧1.50 (M24 x 3 ↧36.1)	7.50 (190)	1 1/4 (M30)
165	11.35 (288)	11.0 (279)	1 1/8-7 ↧1.69 (M27 x 3 ↧40.6)	9.50 (240)	1-8 ↧1.50 (M24 x 3 ↧36.1)	8.25 (210)	1 3/8 (M36)
215	12.22 (310)	12.0 (305)	1 1/4-7 ↧1.88 (M30 x 3.5 ↧44.9)	10.00 (255)	1 1/8-7 ↧1.69 (M27 x 3 ↧40.1)	9.00 (230)	1 1/2 (M36)

Model	H1 Overall height (excluding valve) in (mm)	H2 Height to centerline in (mm)	H3 Foot height in (mm)	H4 Overall height (with valve) in (mm)	L1 Overall Length 180° in (mm)	L1 Overall Length 360° in (mm)	L2 Overall Length, non-rotating 180° in (mm)	L2 Overall Length, non-rotating 360° in (mm)	L3 Shaft flange to counterbalance valve 180° in (mm)	L3 Shaft flange to counterbalance valve 360° in (mm)
17	6.15 (156)	3.15 (80.0)	1.89 (48)	7.05 (179)	11.73 (298)	16.81 (427)	10.26 (261)	15.44 (392)	2.96 (75.2)	5.85 (149)
25	7.34 (186)	3.74 (94.9)	2.75 (69.9)	7.91 (201)	12.72 (323)	18.51 (470)	11.27 (286)	17.05 (433)	5.27 (134)	6.19 (157)
42	8.35 (212)	4.25 (108)	3.07 (77.9)	8.90 (226)	14.37 (365)	21.18 (538)	12.73 (323)	19.54 (496)	5.61 (143)	7.75 (197)
65	9.45 (240)	4.80 (122)	3.47 (88.1)	10.68 (271)	16.24 (413)	24.20 (615)	14.27 (363)	22.23 (565)	5.12 (130)	9.15 (232)
95	10.86 (276)	5.51 (140)	4.13 (105)	11.16 (283)	18.70 (475)	27.76 (705)	16.95 (431)	26.01 (661)	6.00 (152)	10.50 (267)
125	11.99 (305)	6.06 (154)	4.33 (110)	12.21 (310)	20.63 (524)	30.55 (776)	18.21 (463)	28.13 (715)	7.27 (185)	12.13 (308)
165	12.88 (327)	6.50 (165)	4.73 (120)	13.15 (334)	21.81 (554)	32.92 (836)	19.39 (493)	30.49 (775)	7.73 (196)	13.32 (338)
215	14.25 (362)	7.25 (184)	5.32 (135)	14.40 (366)	23.62 (600)	35.67 (906)	21.02 (534)	33.19 (843)	8.69 (221)	14.71 (374)

Model	L4 Mounting Length 180° in (mm)	L4 Mounting Length 360° in (mm)	L5 Shaft flange to mounting hole in (mm)	W1 Mounting width in (mm)	W2 Overall width in (mm)	P1, P2 Ports, housing inch (metric)	V1, V2 Ports, valve inch (metric)
17	9.02 (229)	14.09 (358)	1.50 (38.1)	7.48 (190)	8.74 (222)	ISO-11926/ SAE Series of ports. Sizes vary from 7/16 to 3/4. (ISO-1179-1/BSPP 'G' Series of ports. Sizes vary from 1/4 thru 1/2.) See drawings for details.	ISO-11926/ SAE Series of ports. Sizes vary from 7/16 to 3/4. (ISO-1179-1/ BSPP 'G' Series of ports. Sizes vary from 1/4 thru 1/2.) See drawings for details.
25	9.76 (248)	15.55 (395)	1.73 (43.9)	9.06 (230)	10.55 (268)		
42	11.06 (281)	17.87 (454)	1.97 (50)	10.24 (260)	12.21 (310)		
65	12.36 (314)	20.32 (516)	2.24 (56.9)	11.81 (300)	13.78 (350)		
95	14.73 (374)	23.78 (604)	2.36 (59.9)	13.39 (340)	15.75 (400)		
125	15.75 (400)	25.67 (652)	2.92 (74.2)	14.96 (380)	17.60 (447)		
165	16.77 (426)	27.88 (708)	2.99 (75.9)	16.14 (410)	19.06 (484)		
215	18.11 (460)	30.16 (766)	3.09 (78.5)	17.72 (450)	20.87 (530)		

Specification charts are for general reference only. Consult drawings for actual values and tolerances.

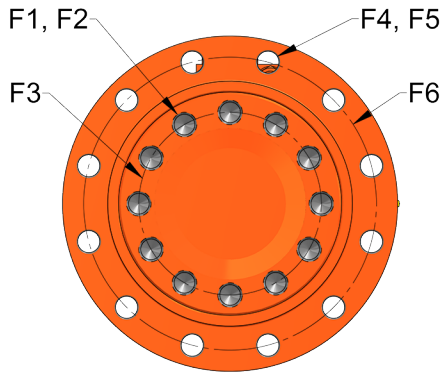

Shaft and Mounting Flange

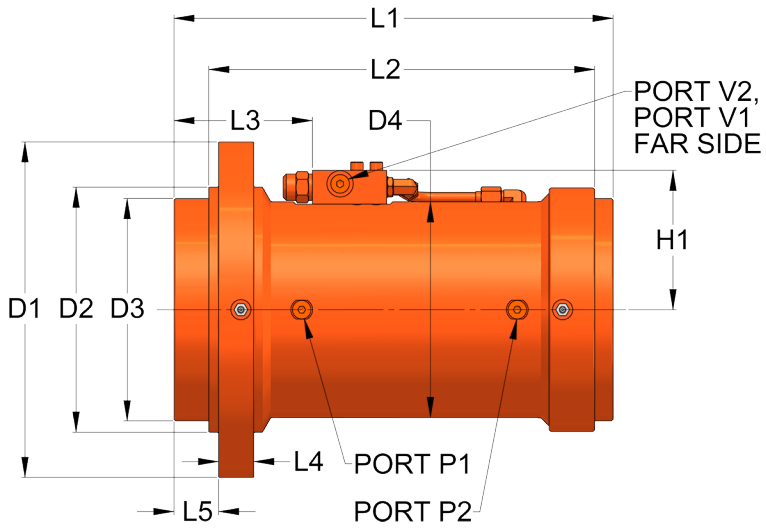

L30 Flange Mount Specifications

Model	Drive Torque in-lb @ 3,000 psi (Nm @ 207 bar)	Holding Torque in-lb @ 3,000 psi (Nm @ 207 bar)	Moment Capacity S1 Option, Cantilever Mount in-lb (Nm)	Radial Capacity lb (kg)	Axial Capacity lb (kg)
17	17,000 (1 921)	43,600 (4 927)	45,900 (5 187)	4,000 (1 814)	3,000 (1 361)
25	25,000 (2 825)	60,400 (6 825)	62,500 (7 063)	5,000 (2 268)	4,000 (1 814)
42	42,000 (4 746)	103,000 (11 639)	105,000 (11 865)	8,000 (3 629)	6,000 (2 722)
65	65,000 (7 345)	162,000 (18 306)	162,500 (18 363)	11,000 (4 990)	8,000 (3 629)
95	95,000 (10 735)	232,000 (26 216)	261,250 (29 521)	15,000 (6 804)	10,000 (4 536)
125	125,000 (14 125)	306,000 (34 578)	343,750 (38 844)	18,000 (8 165)	13,000 (5 897)
165	165,000 (18 645)	404,000 (45 652)	495,000 (55 935)	22,000 (9 979)	15,000 (6 804)
215	215,000 (24 295)	520,000 (58 760)	645,000 (72 885)	26,000 (11 794)	18,000 (8 165)

Model	Displacement 180° in³ (cm³)	Displacement 360° in³ (cm³)	Approximate Weight 180° lb (kg)	Approximate Weight 360° lb (kg)
17	29.8 (488.3)	60.0 (983.2)	76.0 (34.5)	100 (45.4)
25	42.5 (696.5)	85.0 (1 392.9)	110 (49.9)	140 (63.5)
42	72.2 (1 183.1)	144 (2 359.7)	160 (72.6)	220 (99.8)
65	114 (1 868.1)	228 (3 736.3)	240 (108.9)	310 (140.6)
95	164 (2 687.5)	327 (5 358.6)	360 (163.3)	450 (204.1)
125	216 (3 539.6)	432 (7 079.2)	490 (222.3)	630 (285.8)
165	284 (4 653.9)	569 (9 324.3)	610 (276.7)	810 (367.4)
215	366 (5 997.7)	732 (11 995.4)	790 (358.3)	1,000 (453.6)

Specification charts are for general reference only. Consult drawings for actual values and tolerances.

Model	D1 Overall flange diameter in (mm)	D2 Pilot diameter in (mm)	D3 Shaft and endcap flange diameter in (mm)	D4 Housing diameter in (mm)	F1 Threaded mounting hole, shaft flange in, deep (metric, deep) (F2 Quantity of mounting holes: 12)	F3 Bolt circle diameter, shaft flange in (mm)	F4 Housing flange clearance hole, required bolt size in (mm) (F5 Quantity of mounting holes: 12)
17	7.87 (200)	5.91 (150)	5.47 (139)	5.50 (140)	1/2-13 ↧0.75 (M12 x 1.75 ↧18)	4.50 (115)	3/8 (M10)
25	9.25 (235)	6.89 (175)	6.09 (155)	6.00 (152)	5/8-11 ↧0.94 (M16 x 2 ↧23.9)	5.00 (125)	1/2 (M12)
42	11.02 (280)	8.07 (205)	7.22 (183)	7.00 (178)	3/4-10 ↧1.13 (M20 x 2.5 ↧30)	5.88 (150)	5/8 (M16)
65	12.40 (315)	9.05 (230)	8.22 (209)	8.00 (203)	7/8-9 ↧1.31 (M22 x 2.5 ↧33)	6.75 (170)	3/4 (M20)
95	13.98 (355)	10.23 (260)	9.22 (234)	9.00 (229)	1-8 ↧1.38 (M24 x 3 ↧36.1)	7.75 (195)	7/8 (M22)
125	15.60 (396)	11.42 (290)	10.34 (263)	10.0 (254	1 1/8-7 ↧1.69 (M27 x 3 ↧40.6)	8.50 (215)	1 (M24)
165	17.40 (442)	12.40 (315)	11.34 (288)	11.0 (279)	1 1/8-7 ↧1.69 (M27 x 3 ↧40.6)	9.50 (240)	1 1/8 (M27)
215	18.70 (475)	13.38 (340)	12.22 (310)	12.0 (305)	1 1/4-7 ↧1.88 (M30 x 3.5 ↧44.9)	10.00 (255)	1 1/4 (M30)

Model	F6 Bolt circle diameter, housing flange in (mm)	H1 Centerline to valve top in (mm)	L1 Overall Length 180° in (mm)	L1 Overall Length 360° in (mm)	L2 Overall Length, non-rotating 180° in (mm)	L2 Overall Length, non-rotating 360° in (mm)	L3 Shaft flange to counterbalance valve 180° in (mm)	L3 Shaft flange to counterbalance valve 360° in (mm)	L4 Mounting flange thickness in (mm)
17	6.89 (175)	3.90 (99.1)	11.73 (298)	16.81 (427)	10.26 (261)	15.34 (390)	2.96 (75.2)	7.95 (202)	0.99 (25.2)
25	8.07 (205)	4.17 (106)	12.72 (323)	18.51 (470)	11.14 (283)	16.93 (430)	5.27 (134)	6.19 (157)	1.02 (25.9)
42	9.65 (245)	4.65 (118)	14.37 (365)	21.18 (538)	12.73 (323)	19.54 (496)	5.61 (142)	7.75 (197)	1.22 (30.9)
65	10.83 (275)	5.15 (131)	16.24 (413)	24.20 (615)	14.27 (363)	22.23 (565)	5.12 (130)	9.15 (232)	1.30 (33)
95	12.21 (310)	5.65 (144)	18.70 (475)	27.76 (705)	16.95 (431)	26.01 (661)	6.00 (152)	10.50 (267)	1.58 (40.1)
125	13.58 (345)	6.15 (156)	20.63 (524)	30.55 (776)	18.21 (462)	28.13 (715)	7.25 (184)	12.14 (308)	1.65 (41.9)
165	14.96 (380)	6.66 (169)	21.71 (551)	32.92 (836)	19.39 (493)	30.49 (775)	7.83 (199)	13.39 (340)	1.81 (45.9)
215	16.14 (410)	7.16 (182)	23.62 (600)	35.67 (906)	21.02 (534)	33.03 (839)	8.69 (221)	14.71 (374)	2.05 (52)

Model	L5 Shaft flange to mounting flange face in (mm)	P1, P2 Ports, housing inch (metric)	V1, V2 Ports, valve inch (metric)
17	1.06 (26.9)	ISO-11926/SAE Series of ports. Sizes vary from 7/16 to 3/4. (ISO-1179-1/BSPP 'G' Series of ports. Sizes vary from 1/4 thru 1/2.) See drawings for details.	ISO-11926/SAE Series of ports. Sizes vary from 7/16 to 3/4 (ISO-1179-1/BSPP 'G' Series of ports. Sizes vary from 1/4 thru 1/2.) See drawings for details.
25	1.26 (32)		
42	1.38 (35.1)		
65	1.65 (41.9)		
95	1.58 (40.1)		
125	2.09 (53.1)		
165	2.13 (54.1)		
215	2.20 (55.9)		

Specification charts are for general reference only. Consult drawings for actual values and tolerances.

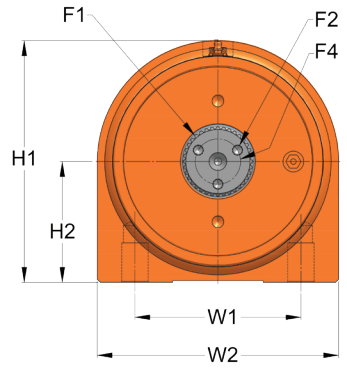

T20-60, Endview

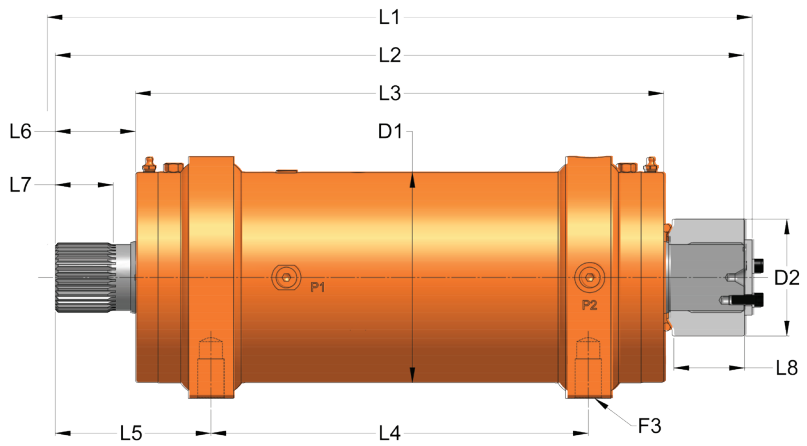

T20-60

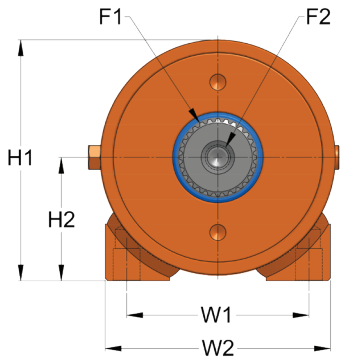

T20-25, 45, Endview

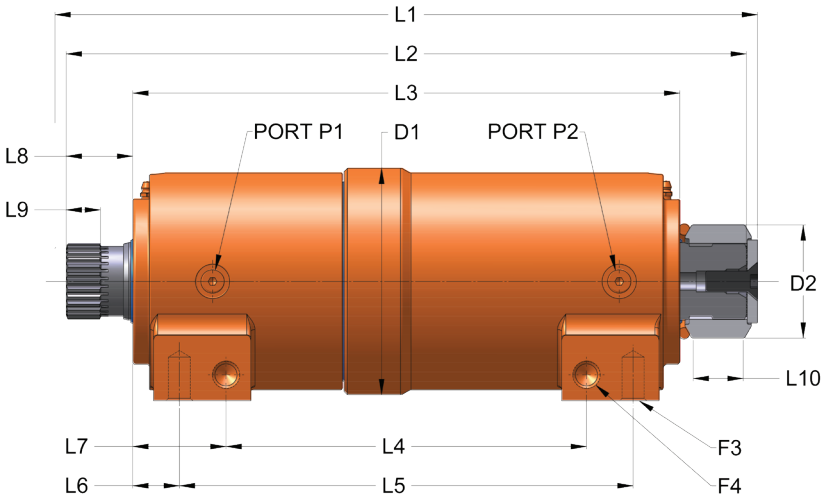

T30-27

Model	Drive Torque in-lb @ 3,000 psi (Nm @ 207 bar)	Holding Torque in-lb @ 3,000 psi (Nm @ 207 bar)	Standard Rotation	Moment Capacity Straddle Mount in-lb (Nm)	Radial Capacity lb (kg)	Axial Capacity lb (kg)	Displacement in^3 (cm^3)	Approximate Weight lb (kg)
T20-25	25,000 (2 825)	54,200 (6 125)	220°	37,500 (4 238)	4,500 (2 041)	4,500 (2 041)	47.3 (775.1)	74.0 (33.6)
T30-27	27,000 (3 051)	54,200 (6 125)	220°	40,500 (4 577)	4,500 (2 041)	4,500 (2 041)	48.8 (799.7)	72.0 (32.7)
T20-45	45,000 (5 085)	94,000 (10 622)	220°	67,500 (7 628)	6,900 (3 130)	6,900 (3 130)	82.8 (1 356.9)	128 (58.1)
T20-60	60,000 (6 780)	127,000 (14 351)	200°	90,000 (10 170)	8,600 (3 901)	8,600 (3 901)	101 (1 655.1)	166 (75.3)

Specification charts are for general reference only. Consult drawings for actual values and tolerances.

Model	D1 Housing diameter in (mm)	D2 Optional spline adapter diameter in (mm)	F1 Shaft spline, both ends inch (metric)	F2 Shaft threaded mounting hole, both ends in, deep (metric, deep)	F3 Threaded mounting hole, housing feet (F4 T30-27 only) in, deep (metric, deep)	H1 Overall height (excluding valve) in (mm)	H2 Height to centerline in (mm)	H3 Overall height (including valve) in (mm)
T20-25	5.50 (140)	3.15 (80)	Inch models comply with ANSI B92.1. (Metric models comply with DIN5480.) See drawings for specific details.	1/2-13 ↧1.21 (M12 x 1.75 ↧35.1)	5/8-11 ↧1.00 (M16 x 2 ↧19)	5.9 (150)	2.88 (73.2)	6.79 (173)
T30-27	5.46 (139)	2.73 (80)		1/2-13 ↧1.21 (M12 x 1.75 ↧35.1)	5/8-11 ↧0.78 (M16 x 2 ↧19.8)	5.61 (142)	2.88 (73.2)	- (-)
T20-45	6.50 (165)	3.54 (89.9)		1/2-13 ↧1.21 (M12 x 1.75 ↧35.1)	3/4-10 ↧1.00 (M20 x 2.5 ↧25)	6.85 (176)	3.30 (83.9)	7.72 (196)
T20-60	7.00 (178)	3.87 (98.3)		5/16-18 (Quantity 3) ↧.50 on 1.50" Bolt circle (M12 x 1.75 Quantity 1 ↧35.1)	7/8-9 ↧1.31 (M22 x 2.5 ↧30)	8.00 (203)	4.00 (102)	8.64 (220)

Model	L1 Overall length, rotating, with optional adapter in (mm)	L2 Overall length, rotating, without optional adapter in (mm)	L3 Overall length, non-rotating in (mm)	L4 Mounting length in (mm)	L5 Mounting hole to end of shaft in (mm)	L6 Shaft extension in (mm)	L7 Spline length in (mm)
T20-25	16.95 (431)	16.41 (417)	13.20 (335)	10.50 (265)	2.96 (75.1)	1.61 (40.9)	0.88 (21.6)
T30-27	16.65 (423)	16.41 (417)	13.20 (335)	10.95 (278.1)	2.72 (69.1)	1.59 (40.5)	0.83 (21)
T20-45	22.08 (561)	21.50 (546)	16.62 (422)	12.50 (320)	4.50 (113)	2.44 (61.9)	1.58 (40)
T20-60	23.94 (608)	22.81 (579)	17.50 (445)	12.50 (320)	5.16 (130)	2.66 (67.6)	1.92 (49)

Model	L8 Optional spline adapter length in (mm)	L9 Housing end to valve in (mm)	L10 Mounting length in (mm)	L11 Mounting hole to end of shaft in (mm)	W1 Mounting width in (mm)	W2 Overall foot width in (mm)
T20-25	1.28 (32.5)	3.44 (87)	- (-)	- (-)	4.25 (104)	5.25 (133)
T30-27	1.20 (30.6)	- (-)	8.70 (220.9)	3.84 (97.6)	4.25 (104)	5.25 (133)
T20-45	2.07 (52.6)	4.97 (126)	- (-)	- (-)	5.25 (140)	6.70 (170)
T20-60	2.42 (60.5)	5.59 (142)	- (-)	- (-)	6.00 (150)	8.00 (203)

Model	P1, P2 Ports, housing inch (metric)
T20-25	ISO-11926/SAE Series of ports. Sizes vary from 7/16 to 9/16. (ISO-1179-1BSPP 'G' Series of ports. Sizes vary from 1/8 to 1/4.) See drawings for details.
T30-27	
T20-45	
T20-60	

Specification charts are for general reference only. Consult drawings for actual values and tolerances.

Offer of Sale

The items described in this document and other documents and descriptions provided by Parker Hannifin Corporation, its subsidiaries and its authorized distributors ("Seller") are hereby offered for sale at prices to be established by Seller. This offer and its acceptance by any customer ("Buyer") shall be governed by all of the following Terms and Conditions. Buyer's order for any item described in its document, when communicated to Seller verbally, or in writing, shall constitute acceptance of this offer. All goods, services or work described will be referred to as "Products".

1. Terms. All sales of Products by Seller are expressly conditioned upon, and will be governed by the acceptance of, these Terms. These Terms are incorporated into any Quote provided by Seller to Buyer. Buyer's order for any Products whether communicated to Seller verbally, in writing, by electronic data interface or other electronic commerce, shall constitute acceptance of these Terms. Seller objects to any contrary or additional terms or conditions of Buyer. Reference in Seller's order acknowledgement to Buyer's purchase order or purchase order number shall in no way constitute an acceptance of any of Buyer's terms or conditions of purchase. No modification to these Terms will be binding on Seller unless agreed to in writing and signed by an authorized representative of Seller.

2. Price; Payment. The Products set forth in the Quote are offered for sale at the prices indicated in the Quote. Unless otherwise specifically stated in the Quote, prices are valid for thirty (30) days and do not include any sales, use, or other taxes or duties. Seller reserves the right to modify prices at any time to adjust for any raw material price fluctuations. Unless otherwise specified by Seller, all prices are F.C.A. Seller's facility (INCOTERMS 2020). All sales are contingent upon credit approval and full payment for all purchases is due thirty (30) days from the date of invoice (or such date as may be specified in the Quote). Unpaid invoices beyond the specified payment date incur interest at the rate of 1.5% per month or the maximum allowable rate under applicable law.

3. Shipment; Delivery; Title and Risk of Loss. All delivery dates are approximate, and Seller is not responsible for damages resulting from any delay. Regardless of the manner of shipment, delivery occurs and title and risk of loss or damage pass to Buyer, upon placement of the Products with the carrier at Seller's facility. Unless otherwise agreed prior to shipment and for domestic delivery locations only, Seller will select and arrange, at Buyer's sole expense, the carrier and means of delivery. When Seller selects and arranges the carrier and means of delivery, freight and insurance costs for shipment to the designated delivery location will be prepaid by Seller and added as a separate line item to the invoice. Buyer shall be responsible for any additional shipping charges incurred by Seller due to Buyer's acts or omissions. Buyer shall not return or repackage any Products without the prior written authorization from Seller, and any return shall be at the sole cost and expense of Buyer.

4. Warranty. The warranty for the Products is as follows: (i) Goods are warranted against defects in material or workmanship for a period of eighteen (18) months from the date of delivery or 2,000 hours of use, whichever occurs first; (ii) Services shall be performed in accordance with generally accepted practices and using the degree of care and skill that is ordinarily exercised and customary in the field to which the Services pertain and are warranted for a period of six (6) months from the date of completion of the Services; and (iii) Software is only warranted to perform in accordance with applicable specifications provided by Seller to Buyer for ninety (90) days from the date of delivery or, when downloaded by a Buyer or end-user, from the date of the initial download. All prices are based upon the exclusive limited warranty stated above, and upon the following disclaimer: **EXEMPTION CLAUSE; DISCLAIMER OF WARRANTY, CONDITIONS, REPRESENTATIONS: THIS WARRANTY IS THE SOLE AND ENTIRE WARRANTY, CONDITION, AND REPRESENTATION, PERTAINING TO PRODUCTS. SELLER DISCLAIMS ALL OTHER WARRANTIES, CONDITIONS, AND REPRESENTATIONS, WHETHER STATUTORY, EXPRESS OR IMPLIED, INCLUDING BUT NOT LIMITED TO THOSE RELATING TO DESIGN, NONINFRINGEMENT, MERCHANTABILITY, AND FITNESS FOR A PARTICULAR PURPOSE. SELLER DOES NOT WARRANT THAT THE SOFTWARE IS ERROR-FREE OR FAULT-TOLERANT, OR THAT BUYER'S USE THEREOF WILL BE SECURE OR UNINTERRUPTED. UNLESS OTHERWISE AUTHORIZED IN WRITING BY SELLER, THE SOFTWARE SHALL NOT BE USED IN CONNECTION WITH HAZARDOUS OR HIGH RISK ACTIVITIES OR ENVIRONMENTS. EXCEPT AS EXPRESSLY STATED HEREIN, ALL PRODUCTS ARE PROVIDED "AS IS".**

5. Claims; Commencement of Actions. Buyer shall promptly inspect all Products upon receipt. No claims for shortages will be allowed unless reported to Seller within ten (10) days of delivery. Buyer shall notify Seller of any alleged breach of warranty within thirty (30) days after the date the non-conformance is or should have been discovered by Buyer. Any claim or action against Seller based upon breach of contract or any other theory, including tort, negligence, or otherwise must be commenced within twelve (12) months from the date of the alleged breach or other alleged event, without regard to the date of discovery.

6. LIMITATION OF LIABILITY. IN THE EVENT OF A BREACH OF WARRANTY, SELLER WILL, AT ITS OPTION, REPAIR OR REPLACE THE NON-CONFORMING PRODUCT, RE-PERFORM THE SERVICES, OR REFUND THE PURCHASE PRICE PAID WITHIN A REASONABLE PERIOD OF TIME. **IN NO EVENT IS SELLER LIABLE FOR ANY SPECIAL, INDIRECT, INCIDENTAL OR CONSEQUENTIAL DAMAGES INCLUDING ANY LOSS OF REVENUE OR PROFITS, WHETHER BASED IN CONTRACT, TORT OR OTHER LEGAL THEORY. IN NO EVENT SHALL SELLER'S LIABILITY UNDER ANY CLAIM MADE BY BUYER EXCEED THE PURCHASE PRICE PAID FOR THE PRODUCTS.**

7. Confidential Information. Buyer acknowledges and agrees that any technical, commercial, or other confidential information of Seller, including, without limitation, pricing, technical drawings or prints and/or part lists, which has been or will be disclosed, delivered or made available, whether directly or indirectly, to Buyer ("Confidential Information"), has been and will be received in confidence and will remain the property of Seller. Buyer further agrees that it will not use Seller's Confidential Information for any purpose other than for the benefit of Seller.

8. Loss to Buyer's Property. Any tools, patterns, materials, equipment or information furnished by Buyer or which are or become Buyer's property ("Buyer's Property"), will be considered obsolete and may be destroyed by Seller after two (2) consecutive years have elapsed without Buyer ordering the Products manufactured using Buyer's Property. Furthermore, Seller shall not be responsible for any loss or damage to Buyer's Property while it is in Seller's possession or control.

9. Special Tooling. "Special Tooling" includes but is not limited to tools, jigs, fixtures and associated manufacturing equipment acquired or necessary to manufacture Goods. Seller may impose a tooling charge for any Special Tooling. Such Special Tooling shall be and remain Seller's property notwithstanding payment of any charges by Buyer. In no event will Buyer acquire any interest in the Special Tooling, even if such Special Tooling has been specially converted or adapted for manufacture of Goods for Buyer and notwithstanding any charges paid by Buyer. Unless otherwise agreed, Seller has the right to alter, discard or otherwise dispose of any Special Tooling or other property owned by Seller in its sole discretion at any time.

10. Security Interest. To secure payment of all sums due from Buyer, Seller retains a security interest in all Products delivered to Buyer and, Buyer's acceptance of these Terms is deemed to be a Security Agreement under the Uniform Commercial Code. Buyer authorizes Seller as its attorney to execute and file on Buyer's behalf all documents Seller deems necessary to perfect Seller's security interest.

11. User Responsibility. Buyer, through its own analysis and testing, is solely responsible for making the final selection of the Products and assuring that all performance, endurance, maintenance, safety and warning requirements of the application of the Products are met. Buyer must analyze all aspects of the application and follow applicable industry standards, specifications, and any technical information provided with the Quote or the Products, such as Seller's instructions, guides and specifications. If Seller provides options of or for Products based upon data or specifications provided by Buyer, Buyer is responsible for determining that such data and specifications are suitable and sufficient for all applications and reasonably foreseeable uses of the Products. In the event Buyer is not the end-user of the Products, Buyer will ensure such end-user complies with this paragraph.

12. Use of Products, Indemnity by Buyer. Buyer shall comply with all instructions, guides and specifications provided by Seller with the Quote or the Products. Unauthorized Uses. If Buyer uses or resells the Products in any way prohibited by Seller's instructions, guides or specifications, or Buyer otherwise fails to comply with Seller's instructions, guides and specifications, Buyer acknowledges that any such use, resale, or non-compliance is at Buyer's sole risk. Further, Buyer shall indemnify, defend, and hold Seller harmless from any losses, claims, liabilities, damages, lawsuits, judgments and costs (including attorney fees and defense costs), whether for personal injury, property damage, intellectual property infringement or any other claim, arising out of or in connection with: (a) improper selection, design, specification, application, or any misuse of Products; (b) any act or omission, negligent or otherwise, of Buyer; (c) Seller's use of patterns, tools, equipment, plans, drawings, designs, specifications or other information or things furnished by Buyer; (d) damage to the Products from an external cause, repair or attempted repair by anyone other than Seller, failure to follow instructions, guides and specifications provided by Seller, use with goods not provided by Seller, or opening, modifying, deconstructing, tampering with or repackaging the Products; or (e) Buyer's failure to comply with these Terms. Seller shall not indemnify Buyer under any circumstance except as otherwise provided in these Terms.

13. Cancellations and Changes. Buyer may not cancel or modify, including but not limited to movement of delivery dates for the Products, any order for any reason except with Seller's written consent and upon terms that will indemnify, defend and hold Seller harmless against all direct, incidental and consequential loss or damage and any additional expense. Seller, at any time, may change features, specifications, designs and availability of Products.

14. Limitation on Assignment. Buyer may not assign its rights or obligations without the prior written consent of Seller.

15. Force Majeure. Seller is not liable for delay or failure to perform any of its obligations by reason of events or circumstances beyond its reasonable control. Such circumstances include without limitation: accidents, labor disputes or stoppages, government acts or orders, acts of nature, pandemics, epidemics, other widespread illness, or public health emergency, delays or failures in delivery from carriers or suppliers, shortages of materials, war (whether declared or not) or the serious threat of same, riots, rebellions, acts of terrorism, fire or any reason whether similar to the foregoing or otherwise. Seller will resume performance as soon as practicable after the event of force majeure has been removed. All delivery dates affected by force majeure shall be tolled for the duration of such force majeure and rescheduled for mutually agreed dates as soon as practicable after the force majeure condition ceases to exist. Force majeure shall not include financial distress, insolvency, bankruptcy, or other similar conditions affecting one of the parties, affiliates and/or sub-contractors.

16. Waiver and Severability. Failure to enforce any provision of these Terms will not invalidate that provision; nor will any such failure prejudice either party's right to enforce that provision in the future. Invalidation of any provision of these Terms shall not invalidate any other provision herein and, the remaining provisions will remain in full force and effect.

17. Termination. Seller may terminate any agreement governed by or arising from these Terms for any reason and at any time by giving Buyer thirty (30) days prior written notice. Seller may immediately terminate, in writing, if Buyer: (a) breaches any provision of these Terms, (b) becomes or is deemed insolvent, (c) appoints or has appointed a trustee, receiver or custodian for all or any part of Buyer's property, (d) files a petition for relief in bankruptcy on its own behalf, or one is filed against Buyer by a third party, (e) makes an assignment for the benefit of creditors; or (f) dissolves its business or liquidates all or a majority of its assets.

18. Ownership of Software. Seller retains ownership of all Software supplied to Buyer hereunder. In no event shall Buyer obtain any greater right in and to the Software than a right in the nature of a license limited to the use thereof and subject to compliance with any other terms provided with the Software.

19. Indemnity for Infringement of Intellectual Property Rights. Seller is not liable for infringement of any patents, trademarks, copyrights, trade dress, trade secrets or similar rights ("Intellectual Property Rights") except as provided in this Section. Seller will defend at its expense and will pay the cost of any settlement or damages awarded in an action brought against Buyer based on a third party claim that one or more of the Products sold hereunder infringes the Intellectual Property Rights of a third party in the country of delivery of the Products by Seller to Buyer. Seller's obligation to defend and indemnify Buyer is contingent on Buyer notifying Seller within ten (10) days after Buyer becomes aware of any such claim, and Seller having sole control over the defense of the claim including all negotiations for settlement or compromise. If one or more Products sold hereunder is subject to such a claim, Seller may, at its sole expense and option, procure for Buyer the right to continue using the Products, replace or modify the Products so as to render them non-infringing, or offer to accept return of the Products and refund the purchase price less a reasonable allowance for depreciation. Seller has no obligation or liability for any claim of infringement: (i) arising from information provided by Buyer; or (ii) directed to any Products provided hereunder for which the designs are specified in whole or part by Buyer; or (iii) resulting from the modification, combination or use in a system of any Products provided hereunder. The foregoing provisions of this Section constitute Seller's sole and exclusive liability and Buyer's sole and exclusive remedy for claims of infringement of Intellectual Property Rights.

20. Governing Law. These Terms and the sale and delivery of all Products are deemed to have taken place in, and shall be governed and construed in accordance with, the laws of the State of Ohio, as applicable to contracts executed and wholly performed therein and without regard to conflicts of laws principles. Buyer irrevocably agrees and consents to the exclusive jurisdiction and venue of the courts of Cuyahoga County, Ohio with respect to any dispute, controversy or claim arising out of or relating to the sale and delivery of the Products.

21. Entire Agreement. These Terms, along with the terms set forth in the main body of any Quote, forms the entire agreement between the Buyer and Seller and constitutes the final, complete and exclusive expression of the terms of sale and purchase. In the event of a conflict between any term set forth in the main body of a Quote and these Terms, the terms set forth in the main body of the Quote shall prevail. All prior or contemporaneous written or oral agreements or negotiations with respect to the subject matter shall have no effect. These Terms may not be modified unless in writing and signed by an authorized representative of Seller.

22. Compliance with Laws. Buyer agrees to comply with all applicable laws, regulations, and industry and professional standards, including those of the United States of America, and the country or countries in which Buyer may operate, including without limitation the U.S. Foreign Corrupt Practices Act ("FCPA"), the U.S. Anti-Kickback Act ("Anti-Kickback Act"), U.S. and E.U. export control and sanctions laws ("Export Laws"), the U.S. Food Drug and Cosmetic Act ("FDCA"), and the rules and regulations promulgated by the U.S. Food and Drug Administration ("FDA"), each as currently amended. Buyer agrees to indemnify, defend, and hold harmless Seller from the consequences of any violation of such laws, regulations and standards by Buyer, its employees or agents. Buyer acknowledges that it is familiar with all applicable provisions of the FCPA, the Anti-Kickback Act, Export Laws, the FDCA and the FDA and certifies that Buyer will adhere to the requirements thereof and not take any action that would make Seller violate such requirements. Buyer represents and agrees that Buyer will not make any payment or give anything of value, directly or indirectly, to any governmental official, foreign political party or official thereof, candidate for foreign political office, or commercial entity or person, for any improper purpose, including the purpose of influencing such person to purchase Products or otherwise benefit the business of Seller. Buyer further represents and agrees that it will not receive, use, service, transfer or ship any Products from Seller in a manner or for a purpose that violates Export Laws or would cause Seller to be in violation of Export Laws. Buyer agrees to promptly and reliably provide Seller all requested information or documents, including end-user statements and other written assurances, concerning Buyer's ongoing compliance with Export Laws.

In line with our policy of continuing product improvement, specifications and information contained in this catalog are subject to change.
Copyright ©2021 by Parker Hannifin Corporation. All rights reserved.

⚠ WARNING

FAILURE OR IMPROPER SELECTION OR IMPROPER USE OF THE PRODUCTS AND/OR SYSTEMS DESCRIBED HEREIN OR RELATED ITEMS CAN CAUSE DEATH, PERSONAL INJURY AND PROPERTY DAMAGE.

This document and other information from the Parker Hannifin Corporation, its subsidiaries and authorized distributors provide product and/or system options for further investigation by users having expertise. It is important that you analyze all aspects of your application, including consequences of any failure and review the information concerning the product or system in the current product catalog. Due to the variety of operating conditions and applications for these products or systems, the user, through its own analysis and testing, is solely responsible for making the final selection of the products and systems and assuring that all performance, safety and warning requirements of the application are met.

The products described herein, including without limitation, product features, specifications, designs, availability and pricing, are subject to change by Parker Hannifin Corporation and its subsidiaries at any time without notice.

Offer of Sale

The items described in this document are hereby offered for sale by Parker Hannifin Corporation, its subsidiaries or its authorized distributors. This offer and its acceptance are governed by provisions stated on a separate page of the document entitled 'Offer of Sale'.

⚠ PROP 65 WARNING

Warning: This product can expose you to chemicals including **Lead and Lead compounds** which are known to the state of California to cause cancer and birth defects or other reproductive harm. For more information go to www.P65Warnings.ca.gov

Parker Hannifin Corporation
Helac/Cylinder Division
Enumclaw, Washington USA

6/21 / Catalog HY34-1001_EU

Parker Hannifin Corporation
Cylinder and Accumulator Division Europe
Delmenhorster Str. 10
D-50765 Köln
www.helac.com /
www.parker.com

Authorized Distributor
MONILEK OILFIELD

E: sales@monilek.com
W: www.monilekgroup.com