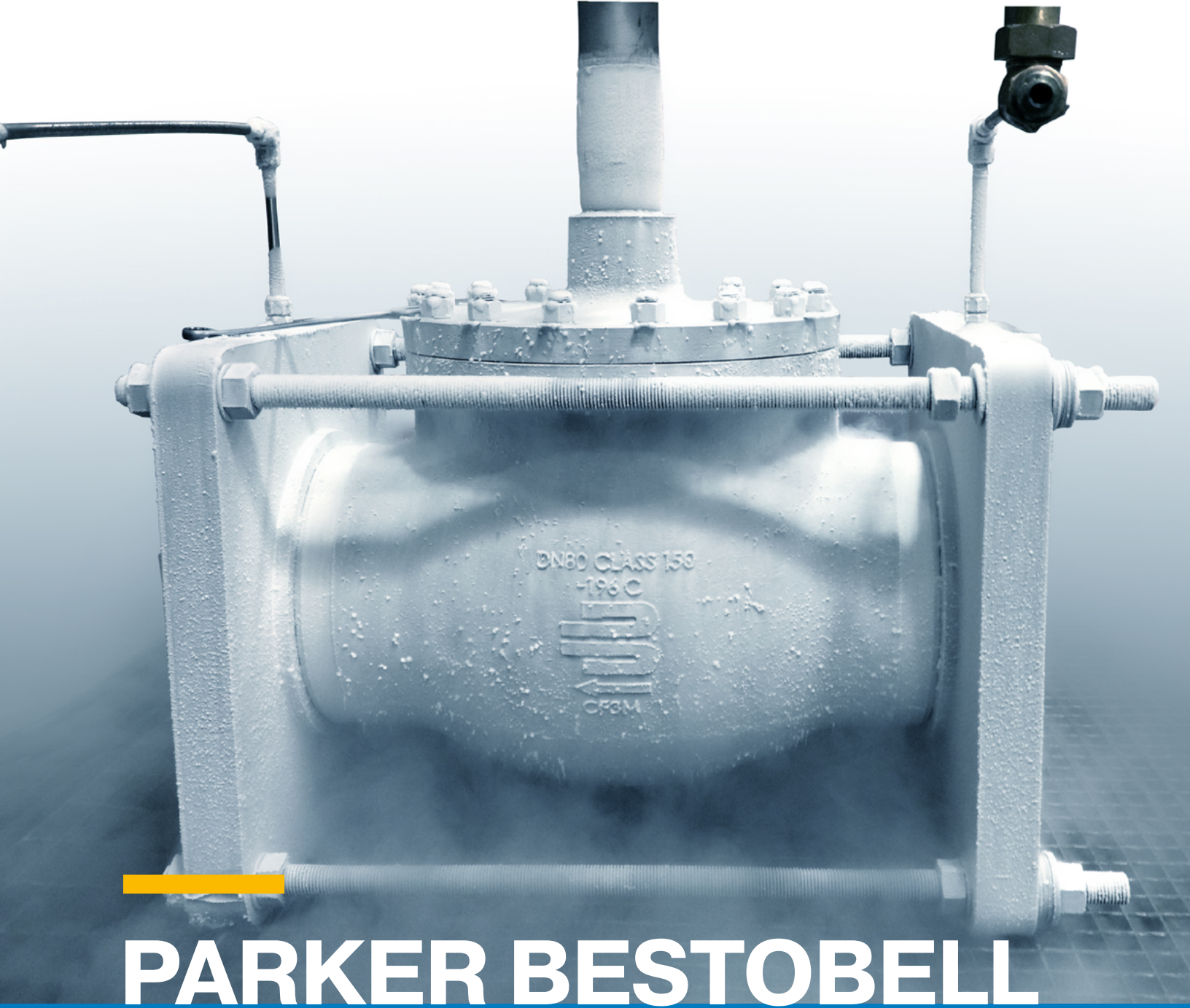

PARKER BESTOBELL CRYOGENIC VALVES

Low Temperature Valves for Storage, Transportation and Production of Industrial Gas and LNG

Parker

Authorized Distributor
MONILEK OILFIELD
MONILEK OILFIELD
E: sales@monilek.com
W: www.monilekgroup.com

WARNING

The products described in this catalog can expose you to chemicals, including Lead, which is known to the State of California to cause cancer and birth defects or other reproductive harm. For more information go to www.p65warnings.ca.gov.

Contents

Introduction **5**

General Technical Information **6**
- Design 6
- Construction Materials 6
- Connections 7
- Features 8
- Oxygen Cleaning 9
- Cryogenic Testing 9
- Cryogenic Product Range 10

Globe Valves **12**
- Overview 12
- Technical Information 14
- Ordering Information 15
  - Manual Globe Valves - Bronze - CNB Series 15
  - Manual Globe Valves - Full Stainless Steel - CNS Series 16
  - Manual Globe Valves - Stainless Steel with Bronze Internals - CNT Series 17
  - Tyre Actuated Globe Valves - Stainless Steel with Bronze Internals - CNT*TA Series 19

Gate Valves **20**
- Overview 20
- Technical Information 22
- Ordering Information 23
  - Manual and Tyre Actuated Gate Valves - Stainless Steel with Bronze Internals - CMC/CMD Series 23

Fill Manifold Assemblies **24**
- Overview 24
- Technical Information 26
- Ordering Information 27
  - Fill Manifold Assemblies - Bronze - CTB Series 27

Ball Valves **28**
- Overview 28
- Technical Information 30
- Ordering Information 31
  - Manual and Actuated Ball Valves - Bronze and Full Stainless Steel - CZF Series 31

Check Valves **32**
- Overview 32
- Technical Information 34
- Ordering Information 35
  - Lift Check Valves - Bronze - CGB Series 35
  - Lift Check Valves - Stainless Steel with Bronze Internals - CGT Series 36
  - Swing Check Valves - Full Stainless Steel - CHC Series 37

Strainers **38**
- Overview 38
- Technical Information 39
- Ordering Information 40
  - Strainers - Bronze - CSB Series 40
  - Strainers - Full Stainless Steel - CSS Series 41

Safety Relief Valves **42**
- Overview 42
- Technical Information 43
- Ordering Information 44
  - Safety Relief Valves - Orifice Diameter 11.4 mm - CWF20/CWL20/CWT20 Series 44
  - Safety Relief Valves - Orifice Diameter 14.0 mm - CWF30/CWT30 Series 45
  - Safety Relief Valves - Orifice Diameter 20.5 mm - CWF40/CWT40 Series 45

Thermal Relief Valves **46**
- Overview 46
- Technical Information 48
- Ordering Information 49
  - Thermal Relief Valves - Bronze and Full Stainless Steel - CVF/CYF Series 49

Proportional Relief Valves **50**
- Overview 50
- Technical Information 52
- Ordering Information 53

Pressure Regulators **54**
- Overview 54
- Technical Information 57
- Ordering Information 59
  - Pressure Regulators - Bronze - CK Series 59

Spares Kits **60**
- Globe Valves 60
- Gate Valves 62
- Fill Manifold Assemblies 64
- Ball Valves 65
- Check Valves 66
- Strainers 67
- Pressure Regulators 68

Introduction

Parker Bestobell is one of the world's experts in designing and manufacturing reliable, high-performance cryogenic valves for the transportation, storage, and processing of ultra-low temperature liquefied gases.

The company has provided cryogenic industrial gas flow control solutions for over 150 years, serving major gas companies and Original Equipment Manufacturers (OEM) worldwide.

The range has been designed to meet industry requirements to withstand temperature changes, possible expansion, and contraction movements generated, avoiding deformation of its mounting.
It covers all the pressure requirements for ASME B31.3 & BS EN 1626 Cryogenic Standards up to class 300. The bore sizes start at DN6 (1/4") and are offered in increments up to DN150 (6"). Many of the valves were designed to meet specific customer needs. Parker's primary philosophy is to build reliable, efficient, cost-effective cryogenic equipment for the intended application.

Continuous product development may, from time to time, necessitate changes in the details contained in this catalog. Parker reserves the right to make such changes at their discretion and without prior notice. All dimensions shown in this catalog are approximate and subject to change.

Every effort is made to provide sufficient, clear, and accurate information to allow the correct selection of products from this catalog. Still, ultimately it is the system designer's or user's responsibility to ensure the selected product is suitable for the intended application. Should you require further information, please do not hesitate to contact your local Parker support.

With thousands of distributor outlets, stores worldwide, and hundreds of Parker personnel and locations, Parker also offers the superior advantage of supply and support in your locale.

Gas Manufacture

Transportation

Static Storage

Parker EHS Vision Statement:

Parker recognizes, and believes, in the importance of safeguarding natural resources and the global environment. We are committed to our employees, our communities, and our customers: their health, safety and understanding of the need for environmental stewardship.

We are committed to the concept of continuous improvement in environmental performance. Accordingly, we are committed to the following principles:

- We will seek to comply with environmental, health, and safety laws worldwide.
- We strive to minimize or eliminate the generation of waste.
- We will monitor compliance with environmental, health and safety regulations.

General Technical Information

Design

Designed and engineered for use with Group 1 gases.
Full material traceability backed by BS EN 10204 3.1/3.2 certification.
CE-marked according to the Pressure Equipment Directive (PED) - up to DN100 (4").
UKCA-marked according to the Pressure Equipment Safety Regulations (PESR) - up to DN100 (4").

Code/Specification	Description
ASME B16.34	Valves Flanged, Threaded, and Welding End
ASME B16.5	Pipe Flanges & Flanged Fittings
ASME B31.3	Process Piping
BS EN 13648	Cryogenic vessels. Safety devices for protection against excessive pressure
BS EN 12266	Industrial valves. Testing of metallic valves. Pressure tests, test procedures and acceptance criteria
BS EN 1626	Cryogenic vessels. Valves for cryogenic service
BS EN 10204	Metallic Products: Types of Inspection Documents
ISO 21011	Cryogenic vessels: Valves for cryogenic service
ISO 4126-1	Safety devices for protection against excessive pressure
ISO23208	Cleanliness for cryogenic service
A. D. Merkblatt A2	Pressure Vessel Equipment safety devices against excess pressure - safety valves

Construction Materials

All materials are purchased from long-standing reputable sources, conforming to not only recognized national/international standards but also to additional requirements imposed by Parker to assure suitability/usability across the widest spectrum of user applications. A range of techniques and processes, including PMI (Positive Material Identification), is used to validate all incoming material supplies, segregation, storage, and maintenance of product quality.

Body material options

Material Group	Material Designator	UNS No.	ASTM Material Grade
Austenitic Stainless Steel	316	S31600	A479 Gr 316
Austenitic Stainless Steel	316L	S31603	A479 Gr 316L
Austenitic Stainless Steel	304	S30400	A276 Gr 304
Austenitic Stainless Steel	304L	N/A	N/A
High Tensile Brass	CW721R	C67500	N/A
Phosphor Bronze	CW451K	C51000	N/A
Gunmetal	CC491K	C83600	B62
Naval Brass	CW712R	C46400	B21

All materials will meet (as applicable) the requirements of NACE MR0103/MR0175 and ISO 15156. They are further supplied as per NORSOK M650/M630 as required.

Connections

Threaded Connections

Thread Type	Standard
NPT/National Pipe Taper	ANSI B1.20.1
BSP/ISO Taper	BS21, ISO7/1
BSP/ISO Parallel	BS2779, ISO 228/1+2, DIN 3852 FORM A(2)
M = Metric Thread	BS2779, ISO 228/1+2, DIN 3852

Flange Connections

Pressure-temperature ratings for flanges ASME/ANSI B16.5

Parker Bestobell cryogenic flanged valves carry the pressure-temperature ratings of their flange end interface according to ASME B16.5 dimensional specifications and pressure ratings.

Flange Material	°C	-29	38	50	100
	°F	-20	100	122	212
	Working Pressure - PSI (bar)				
Class 150					
A351 Gr. CF8M		275 (19.0)	275 (19.0)	267 (18.4)	235 (16.2)
Class 300					
A351 Gr. CF8M		719 (49.6)	719 (49.6)	697 (48.1)	612 (42.2)

Welded Connections

Butt Weld:

DN6-DN100 Butt Weld end connections are to ASME/ANSI B16.25. Standard is Schedule 10; other schedules are available on request.

Socket Weld:

Socket Weld end connections are to ASME B16.11; others might be available on request. Contact your local Parker representative.

General Technical Information

Features

Spring-loaded stem packing

Parker Bestobell valves feature a spring-loaded PTFE chevron seal with a high level of thermal expansion, which is not as elastic as an elastomer. The springs in the chevron seal maintain a constant load on the gland over time, reducing the frequency of a manual adjustment.

Bolted bonnet

- Unique Parker Bestobell loose flange bolted bonnet design allows for thermal expansion and contraction and eliminates leakage at the bonnet gasket.
- Stainless Steel cover screwed and welded to the tube extension ensures alignment and joint integrity.
- Bearing material insert prevents galling and reduces friction between the stem and bush.
- Bolted bonnet enables rapid and efficient mounting and servicing of trailers, cold boxes, vessels etc. without the difficulties usually encountered when working in enclosed environments.

Anti-blowout stem design

Parker Bestobell valves have been designed with an anti-blowout stem to prevent the stem being pushed out by internal valve pressure during maintenance of the packing.

This has been achieved by machining a collar on the stem, which is of a larger diameter than the stem itself. The collar is kept in place by the shoulder of the valve cover.

Additionally, a machined flat on the blowout-proof collar prevents liquid from being trapped in the headwork which could lead to a rapid build-up of pressure as liquid warms up.

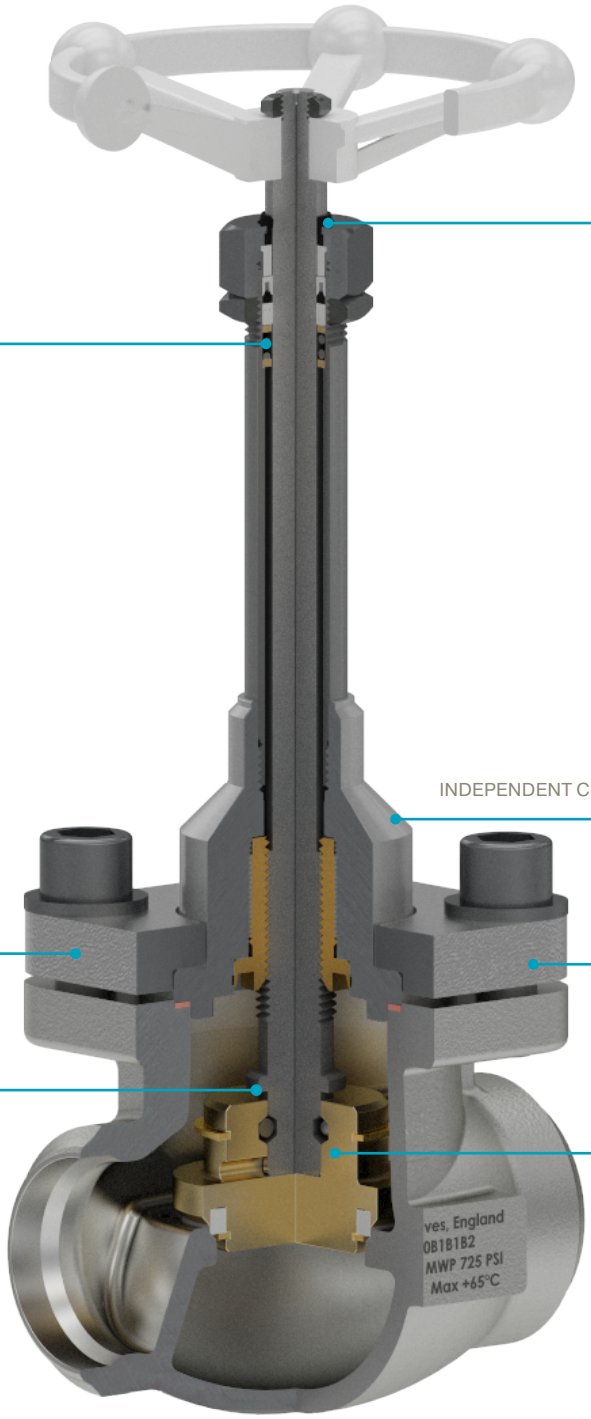

Wiper seals

Wiper seals, also known as dust or scraper seals, prevent dust, debris, and moisture from entering the valve assembly and cryogenic system.
These seals are fitted on the external side of the Parker Bestobell valve head and provide a more reliable sealing contact with the stem.

Independent cover & top flange

Parker Bestobell valves feature an independent cover, which ensures an absolute seal between the bottom and top flanges by maintaining the downward force on the sealing gasket. The top flange is manufactured as a separate part from the cover. The flange and cover are torqued down using securing bolts with a built-in strain. This prevents leakage from the gasket over long-term usage.

Floating disc and non-rotating seal

The freely rotating disc of Parker Bestobell valves ensures constant sealing contact during the opening and closing of the valves and enables long-term leak-free operation.

Oxygen Cleaning

All Parker Bestobell cryogenic valves go through a cleaning process of removing contaminants to eliminate the risk of combustion and ignition hazards in oxygen service. Through oxygen cleaning, both organic and inorganic contaminants, such as hydrocarbon-based oils and greases are removed.

The valves are then assembled in clean room conditions and pressure tested before dispatch.

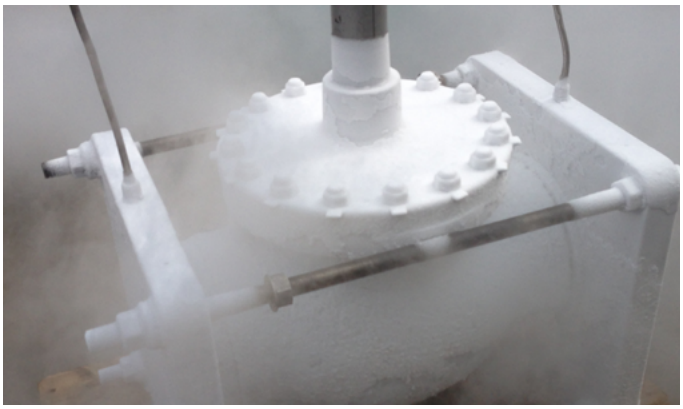

Cryogenic Testing

Parker Bestobell carries out cryogenic valve tests on request. These cryogenic tests follow BS EN 1626 standard procedures.

During cryogenic testing, valves are placed in an insulated tank and immersed in liquid nitrogen at any temperature down to -196^{0}C (-321^{0}F).

Shell leak tests are perfomed using 100% helium as the search gas.

General Technical Information

Cryogenic Product Range

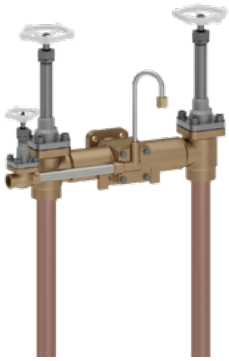

Valve Type	Manual Globe Valve	Tyre Actuated Globe Valve	Manual & Tyre Actuated Gate Valve	Fill Manifold Assembly	Manual & Actuated Ball Valve
Series	CNB CNS CNT	CNT*TA	CMC CMD	CTB	CZF CZF*A
Page Number	12	12	20	24	28
Size Range mm	DN6-DN200	DN25, DN40, DN65	DN40-DN100	DN40	DN15-DN50
Size Range inch	1/4" - 8"	1", 1-1/2", 2-1/2"	1-1/2" - 4"	1-1/2"	1/2" - 2"
Pressure Rating	Up to 50 bar (725 PSI)	Up to 50 bar (725 PSI)	Up to 40 bar (580 PSI)	Up to 50 bar (725 PSI)	Up to 50 bar (725 PSI)
End Connections	NPT BSP Socket Weld Butt Weld Flanged Stainless Steel Stubs	Socket Weld Butt Weld Flanged	Socket Weld Butt Weld	Inlet: Muller flange Outlet: Stainless Steel or Copper Stubs	NPT BSP Socket Weld Butt Weld
Material	Bronze Full Stainless Steel Stainless Steel with Bronze Internals	Stainless Steel with Bronze Internals	Stainless Steel with Bronze Internals	Bronze	Bronze Full Stainless Steel

Lift Check Valve	Swing Check Valve	Strainer	Safety Relief Valve	Thermal Relief Valve	Pressure Regulator
CGB CGT	CHC	CSB CSS	CW	CVF CYF	CK
32	32	38	42	46	50
DN6-DN150	DN25-DN100	DN6-DN150	DN10-DN20	DN6	DN15
1/2" - 6"	1"- 4"	1/2" - 6"	3/8" - 3/4"	1/4"	1/2"
Up to 50 bar (725 PSI)	Up to 50 bar (725 PSI)	Up to 50 bar (725 PSI)	Up to 40 bar (580 PSI)	Up to 40 bar (580 PSI)	Up to 25 bar (360 PSI)
NPT BSP Socket Weld Butt Weld Flanged Stainless Steel Stubs	Socket Weld Butt Weld Flanged	NPT BSP Socket Weld Butt Weld Flanged Stainless Steel Stubs	NPT BSP	NPT BSP A-LOK®	NPT BSP Butt Weld
Bronze Stainless Steel with Bronze Internals	Full Stainless Steel	Bronze Stainless Steel with Bronze Internals	Bronze Stainless Steel with Bronze Internals	Bronze Full Stainless Steel	Bronze

Globe Valves

Overview

Parker Bestobell cryogenic uni-directional globe valves are designed for shut-off of flow, and flow and pressure regulating purposes.

The globe valve design incorporates a floating disc and non-rotating seal, which provide effective long-term sealing with zero leakage of media.

The cone seat is designed for a drop-tight shut-off and to decrease the chance of ice build-up if moisture is present on the downstream side of the valve.

The preferred orientation of the Parker Bestobell cryogenic globe valves is vertical. It should not be less than 30˚ from the horizontal position if installed at an angle.

Parker Bestobell cryogenic globe valves are available as manual and pneumatic actuation types.

The pneumatic tyre design enables remote control and emergency shut-off of flow. The valve is of a fail-closed (FC) design with automatic operation. It is equipped with a manual override system in case air has been lost and an emergency discharge is required.

Functions:

- Media isolation
- Media control

Applications:

- Transportation of liquefied gases
- Storages of liquefied gases
- Gas processing

Valve Size	DN6 - DN200
Maximum Working Pressure (MWP)	50 bar (725 PSI) dependent on end connections
Working temperature	-196˚C to +65˚C (-319˚F to +149˚F)
End connections	BSP, NPT, Socket Weld, Butt Weld, Flanged, Stainless Steel Stubs
Body materials	Bronze, Stainless Steel
Suitable for media type	Group 1 gases Cleaned for oxygen service
Design and testing standards	ASTM B31.1, BS EN 1626, BS ISO 21011 Optional full material traceability backed by BS EN 10204 3.1/3.2 certification
Approvals	CRN, UKCA and PED approved
Marking	CE and UKCA marked

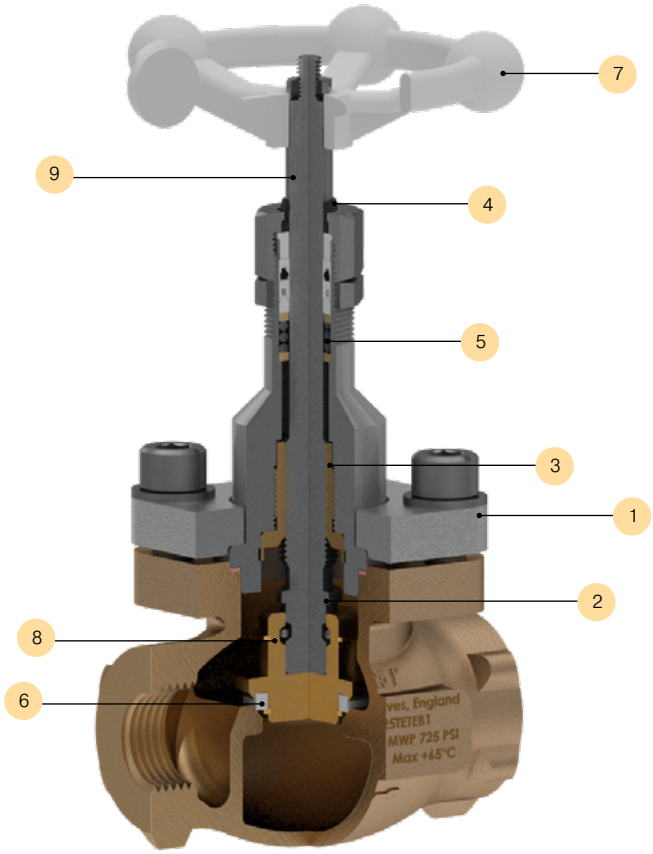

Features, Benefits and Values

Reference	Feature	Benefit	Value
1	Bolted bonnet	Ease of maintenance Reduced maintenance area Allows for thermal expansion and contraction at cryogenic temperatures Eliminates leakage at the bonnet gasket	**Safety** **Reliability** **Ease of Operation**
2	Anti-blowout stem	The anti-blowout design prevents the stem being pushed out by internal valve pressure during maintenance of the packing A machined flat on the collar prevents liquid from being trapped in the headwork which could lead to a rapid build-up of pressure as liquid warms up	**Safety** **Reliability**
3	Bearing material insert	Prevents thread galling between stem and cover	**Performance** **Reliability**
4	Wiper (dust) seals	Prevent dust, debris, or outside weather conditions from entering the valve Maintain a sealing contact with the stem	**Performance** **Reliability**
5	Spring-loaded gland packing	Springs maintain a constant load on the gland, reducing the frequency of manual adjustment and influence of temperature changes Long service life: 10,000 operations	**Performance** **Reliability**
6	Disc and seal retention	The absence of threaded components provides total reliability in systems with vibration	**Safety** **Reliability**
7	Lightweight ergonomic handwheel	Reduced weight of the complete assembly Enables installation in confined spaces	**Ease of Operation**
8	Floating disc and non-rotating seal	Prevent the wear of the disc and seal and extend the life of the valve	**Safety** **Reliability**
9	Non-extended stem	Enables installation in confined spaces Reduced weight	**Performance** **Ease of Operation** **Lower overall cost**
N/A	Extended stem	Enables an easy access for valve operation and maintenance Prevents the loss of cold energy Prevents the damage of valve packings from low liquid temperatures Ease of use of the jacketing material	**Performance** **Reliability** **Ease of Operation**

Parker Bestobell Cryogenic Globe Valve in Bronze (DN40; Extended Stem with Screwed Schedule 10 Stainless Steel Stubs)

Parker Bestobell Cryogenic Globe Valve in Stainless Steel (DN40; Extended Stem with Flanged Ends)

Parker Bestobell Cryogenic Tyre Actuated Globe Valve in Stainless Steel with Bronze Internals (DN25; Extended Stem with Socket Weld Ends)

Globe Valves

Technical Information

Bill of Materials

	Description	Bronze (CNB Series)	Full Stainless Steel (CNS Series)	Stainless Steel with Bronze Internals (CNT Series)
1	Body	Gun Metal BS EN 1982 CC491K	Stainless Steel ASTM A351 CF8M	Stainless Steel ASTM A351 CF8M
2	Cover	Stainless Steel BS EN 10088-3 1.4301		Stainless Steel BS EN 10088-3 1.4301 (DN15-DN65) Stainless Steel ASTM A351 CF8M (DN80, DN100)
3	Bonnet Flange	Stainless Steel ASTM A351 CF8M		
4	Disc	HT Brass BS EN 12164 CW 721R	Stainless Steel BS EN 10088-3 1.4401	HT Brass BS EN 12164 CW 721R
5	Stem	Stainless Steel BS EN 10088-3 1.4401		
6	Gasket	Sigma 511		
7	Gland Packing	Virgin PTFE		
8	Fasteners	Stainless Steel BS6105 A2/A4 Gr.70		
9	Seal	Virgin PTFE/PCTFE		PCTFE (DN15-DN40) Virgin PTFE (DN50-DN100)
10	Extension Tube (extended stem valves)	Stainless Steel ASTM A312 TP304L		
11	Actuator	N/A	N/A	Rubber
N/A	Handwheel	Aluminum LM4		
N/A	Stubs	Stainless Steel ASTM A312 TP 304L	N/A	N/A

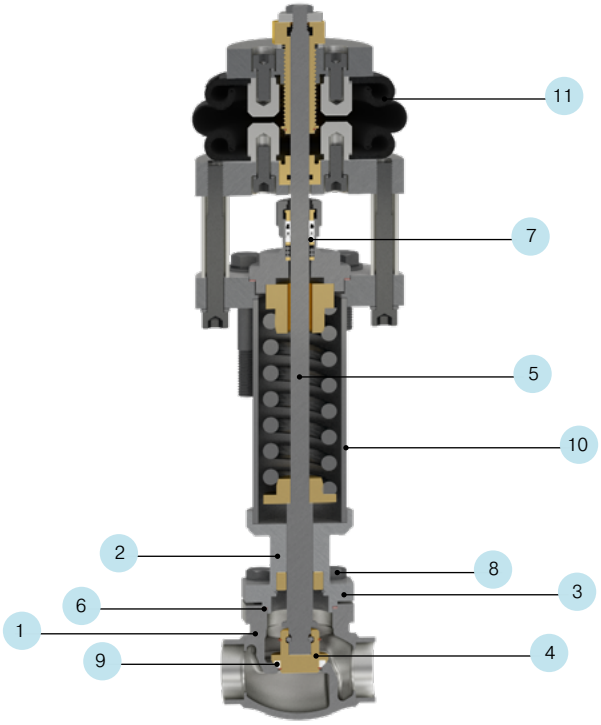

Ordering Information

Manual Globe Valves - Bronze
CNB Series

CNB	DN15	TA	TA	B	1

Series	
Cryogenic Manual Globe Valves - Bronze	CNB

Valve Size	
15 mm	DN15
25 mm	DN25
40 mm	DN40
50 mm	DN50

Inlet Connection	
BSP-PL Female	TA
NPT Female	TE
Screwed Schedule 10 Stainless Steel Stubs	ST

Outlet Connection	
BSP-PL Female	TA
NPT Female	TE
Screwed Schedule 10 Stainless Steel Stubs	ST

Bonnet Type	
Bolted	B

Stem Length	
Non-Extended	1
230 mm	2
300 mm	3

Notes:

1. Inlet and outlet connections must be of the same type.
2. Options available on request: Purge point (available on DN15 only); Colored handwheel; DN6, DN10 size valves; Socket Weld end connections; Pneumatic linear actuator; Check function.

Specifications

Threaded Ends/Threaded Ends with Stainless Steel Stubs

Valve Size		DN15 15 mm			DN25 25 mm			DN40 40 mm			DN50 50 mm		
Stem length		Non-Extended Stem	230 mm	300 mm	Non-Extended Stem	230 mm	300 mm	Non-Extended Stem	230 mm	300 mm	Non-Extended Stem	230 mm	300 mm
A	mm	68			92			121			146		
B	mm	80	230	300	90	230	300	110	230	300	140	230	300
C: Closed	mm	151	299	366	165	307	368	187	295	374	204	305	385
D: Open	mm	159	307	371	177	320	379	200	310	386	220	321	401
E	mm	80			101			121			144		
Cv	US GPM	3.6			13.2			26.5			43.0		
Weight	kg	1.0	1.5	1.6	2.0	2.5	2.6	3.7	4.5	4.7	6.0	7.6	7.9

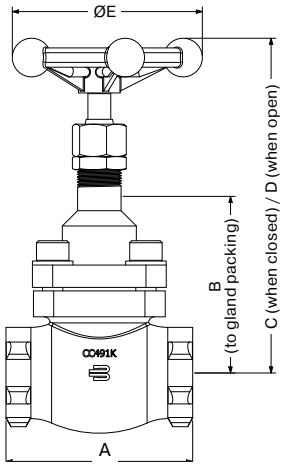

Globe Valves

Ordering Information

Manual Globe Valves - Full Stainless Steel

CNS Series

CNS	DN15	B1	B1	B	3

Series	
Cryogenic Manual Globe Valves - Full Stainless Steel	CNS

Valve Size	
15 mm	DN15
25 mm	DN25
40 mm	DN40
50 mm	DN50

Inlet Connection	
Butt Weld schedule 10	B1
Socket Weld	SW
Flange ASME CL150	FA
Flange ASME CL300	FC

Outlet Connection	
Butt Weld schedule 10	B1
Socket Weld	SW
Flange ASME CL150	FA
Flange ASME CL300	FC

Bonnet Type	
Bolted	B

Stem Length	
300 mm	3

Notes:

1. Inlet and outlet connections must be of the same type.
2. Options available on request: Colored handwheel; DIN flanges; Butt Weld Schedule 40; Non-extended stem; DN6, DN10, DN65, DN80, DN100 size valves; Pneumatic linear actuator; Check function.

Specifications

Butt Weld/Socket Weld Ends

Valve Size		DN15 15 mm	DN25 25 mm	DN40 40 mm	DN50 50 mm
A	mm	68	92	121	146
B	mm	300	300	300	300
C: Closed	mm	366	368	374	385
D: Open	mm	371	379	386	401
E	mm	80	101	121	144
Cv	US GPM	3.6	13.2	26.5	43.0
Weight	kg	1.6	2.3	4.2	6.8

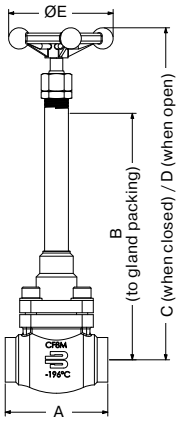

Flanged Ends - Class 150 and 300

Valve Size			DN15 15 mm	DN25 25 mm	DN40 40 mm	DN50 50 mm
A	mm	Class 150	115	140	165	203
		Class 300	130	160	200	230
G	mm	Class 150	89	108	127	152
		Class 300	95	124	155	165
Flange Thickness Cv	mm	Class 150	13.0	14.5	17.5	19.1
		Class 300	14.0	18.0	21.0	22.0
Weight	kg	Class 150	2.5	5.0	8.7	12.4
		Class 300	2.8	5.3	9.6	13.8

Dimensions B, C, D, E and Cv values are the same as for Butt Weld/Socket Weld ends.

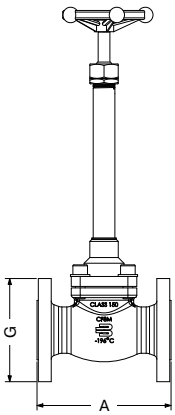

Manual Globe Valves - Stainless Steel with Bronze Internals

CNT Series

CNT	DN25	SW	SW	B	2

Series	
Cryogenic Manual Globe Valves - Stainless Steel with Bronze Internals	CNT

Valve Size	
15 mm	DN15
25 mm	DN25
40 mm	DN40
50 mm	DN50
65 mm	DN65
80 mm	DN80
100 mm	DN100

Inlet Connection	
Butt Weld Schedule 10	B1
Socket Weld	SW
Flange ASME CL150	FA
Flange ASME CL300	FC

Outlet Connection	
Butt Weld Schedule 10	B1
Socket Weld	SW
Flange ASME CL150	FA
Flange ASME CL300	FC

Bonnet Type	
Bolted	B

Stem Length		
DN15 - DN50	Non-Extended	1
	230 mm	2
	300 mm	3
DN65, DN80	300 mm	3
DN100	400 mm	4

Notes:

1. Inlet and outlet connections must be of the same type.
2. Options available on request: Colored handwheel; DIN Flanges; Butt Weld Schedule 40; DN6, DN10, DN150, DN200 size valves; Pneumatic linear actuator; Check function.

Specifications

Butt Weld/Socket Weld Ends

Valve Size		DN15 15 mm			DN25 25 mm			DN40 40 mm			DN50 50 mm			DN65 65 mm	DN80 80 mm	DN100 100 mm
Stem length		Non-Extended Stem	230 mm	300 mm	Non-Extended Stem	230 mm	300 mm	Non-Extended Stem	230 mm	300 mm	Non-Extended Stem	230 mm	300 mm	300 mm	300 mm	400 mm
A	mm		68			92			121			146		178		292
B	mm	80	230	300	90	230	300	110	230	300	140	230	300	300		400
C: Closed	mm	151	299	366	165	307	368	187	295	374	204	305	385	392	407	578
D: Open	mm	159	307	371	177	320	379	200	310	386	220	321	401	412	437	613
E	mm		80			101			121			144		171	222	380
Cv	US GPM		3.6			13.2			26.5			43.0		75.0	108.0	198.0
Weight	kg	1.3	1.6	1.8	2.0	2.3	2.5	4.0	4.2	4.5	6.8	7.0	7.2	12.00	13.5	55.0

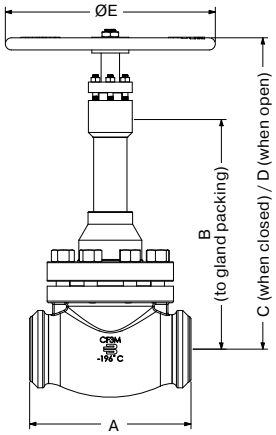

Globe Valves

Ordering Information

Flanged Ends - Class 150 and 300

Valve Size			DN15 15 mm			DN25 25 mm			DN40 40 mm			DN50 50 mm			DN65 65 mm	DN80 80 mm	DN100 100 mm
Stem length			Non-Extended Stem	230 mm	300 mm	Non-Extended Stem	230 mm	300 mm	Non-Extended Stem	230 mm	300 mm	Non-Extended Stem	230 mm	300 mm	300 mm	300 mm	400 mm
A	mm	Class 150	115			140			165			203			216	243	350
		Class 300	130			160			200			230			290	310	350
G	mm	Class 150	89			108			127			152			178	190	228
		Class 300	95			124			155			165			191	210	254
Flange Thickness	mm	Class 150	13.00			14.50			17.50			19.05			25.40	24.90	23.90
		Class 300	14.00			18.00			21.00			22.00			25.00	28.00	32.00
Weight	kg	Class 150	2.3	2.6	2.7	4.0	4.3	4.6	7.0	7.2	7.5	11.8	11.6	11.9	18.0	22.0	66.0
		Class 300	2.6	3.0	3.1	4.8	5.0	5.3	9.4	9.6	10.0	13.3	13.5	17.5	21.5	27.0	73.0

Dimensions B, C, D, E and Cv values are the same as for Butt Weld/Socket Weld ends.

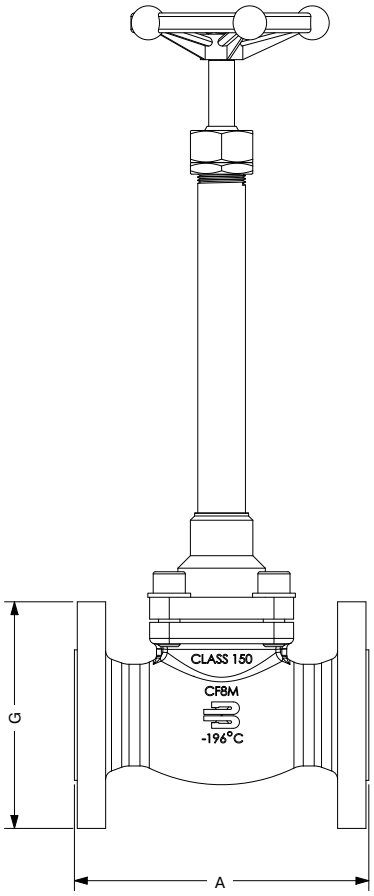

Tyre Actuated Globe Valves - Stainless Steel with Bronze Internals

CNT*TA Series

CNT	DN25	SW	SW	B	3	TA

Series	
Cryogenic Tyre Actuated Globe Valves - Stainless Steel with Bronze Internals	CNT

Valve Size	
25 mm	DN25
40 mm	DN40
65 mm	DN65

Inlet Connection	
Butt Weld Schedule 10	B1
Socket Weld	SW
Flange ASME CL150	FA
Flange ASME CL300	FC

Outlet Connection	
Butt Weld Schedule 10	B1
Socket Weld	SW
Flange ASME CL150	FA
Flange ASME CL300	FC

Bonnet Type	
Bolted	B

Stem Length	
300 mm	3

Actuator	
Tyre Actuator	TA

Notes:

1. Inlet and outlet connections must be of the same type.
2. Options available on request: Colored handwheel; DIN Flanges; Butt Weld Schedule 40.

Specifications

Butt Weld/Socket Weld Ends

Valve Size		DN25 25 mm	DN40 40 mm	DN65 65 mm
A	mm	92	121	178
B: Gland packings	mm	252	231	313
C: Closed	mm	408	388	516
D: Open	mm	418	398	526
E: Actuator diameter	mm	131	131	176
Cv	US GPM	13.2	26.5	75.0
Weight	kg	9.5	11.2	22.3
Maximum Working Pressure	bar	20	10	8
	PSI	290	145	116

DN25

DN40

DN65

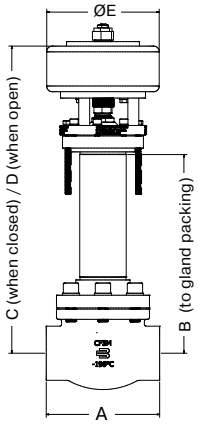

Gate Valves

Overview

Parker Bestobell cryogenic uni-directional gate valves are used for complete flow shut-off. These valves are not used for flow control since they have only two positions (open/close).

These full bore valves provide a high media flow rate with minimal leakage at low pressure drops.

The valves have a wedge seat design, developed to achieve a tight shut-off at all times and prevent a liquid lock by sealing on the downstream seat only.

The lapped seat and PTFE seal ensure a tight shut-off at all times and prevent a liquid lock by sealing on the downstream seat only.

The preferred orientation of the Parker Bestobell cryogenic gate valves is vertical. It should not be less than 30° from the horizontal position if installed at an angle.

Parker Bestobell cryogenic gate valves are available in manual and pneumatic actuation types.

The pneumatic tyre design enables remote control and emergency shut-off of flow. The valve is of a fail-closed (FC) design with automatic operation. The valve is equipped with a manual override system in case air has been lost and an emergency discharge is required.

Functions:

- Primary media loading valve
- Emergency shut-off valve
- Media Isolation

Applications:

- Transportation of liquefied gases
- Gas processing

Valve size	DN40 - DN80
Maximum Working Pressure (MWP)	40 bar (580 PSI) dependent on end connections
Working temperature	-196°C to +65°C (-319°F to +149°F)
End connections	Butt Weld
Body material	Stainless Steel
Suitable for media type	Group 1 gases Cleaned for oxygen service
Design and testing standards	ASTM B31.1, BS EN 1626, BS ISO 21011 Optional full material traceability backed by BS EN 10204 3.1/3.2 certification
Approvals	CRN, UKCA and PED approved
Marking	CE and UKCA marked
Pneumatic Tyre Actuator	• MWP: 8 bar (116 PSI) • Working temperature: –40°C to +50°C (-40°F to + 122°F) • Connections: 1/4" BSP-TR, 1/4" NPT (adaptor)

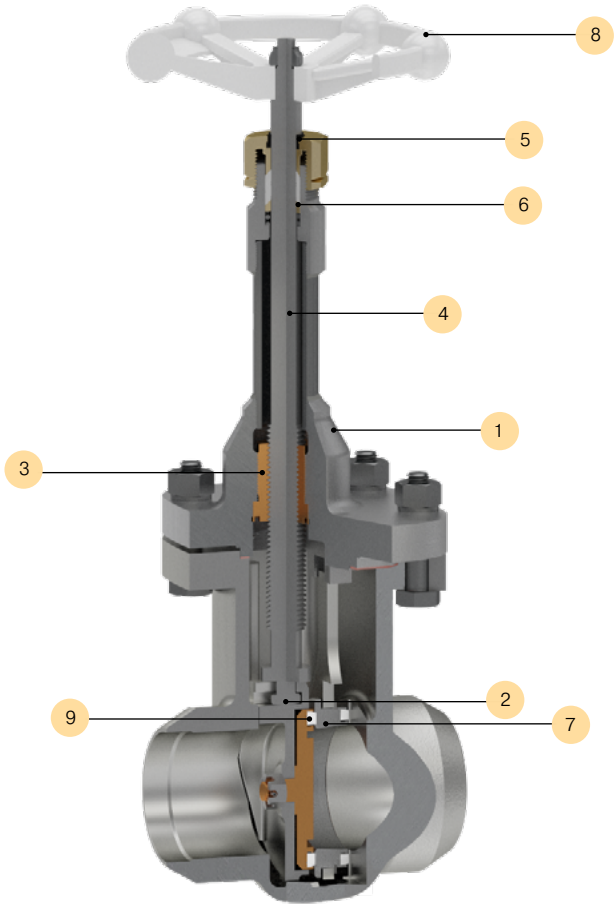

Features, Benefits and Values

Reference	Feature	Benefit	Value
1	Bolted bonnet	Ease of maintenance Reduced maintenance area Allows for thermal expansion and contraction at cryogenic temperatures Eliminates leakage at the bonnet gasket	**Safety** **Reliability** **Ease of Operation**
2	Anti-blowout stem	The anti-blowout design prevents the stem being pushed out by internal valve pressure during maintenance of the packing A machined flat on the collar prevents liquid from being trapped in the headwork which could lead to a rapid build-up of pressure as liquid warms up	**Safety** **Reliability**
3	Bearing material insert	Prevents thread galling between stem and cover	**Performance** **Reliability**
4	Extended stem	Enables easy access for valve operation and maintenance Prevents the loss of cold energy Prevents the damage of valve packings from low liquid temperatures Ease of use of the jacketing material	**Performance** **Reliability** **Ease of Operation**
5	Wiper (dust) seals	Prevent dust, debris, or outside weather conditions from entering the valve Maintain a sealing contact with the stem	**Performance** **Reliability**
6	Spring-loaded gland packing	Springs maintain a constant load on the gland, reducing the frequency of manual adjustment and influence of temperature changes Long service life: 10,000 operations	**Performance** **Reliability**
7	Replaceable body seat	Eliminates the need to disassemble the valve from the pipeline Reduced cost associated with replacing or rebuilding the valve body	**Ease of Operation**
8	Lightweight ergonomic handwheel	Reduced weight of the complete assembly Enables installation in confined spaces	**Ease of Operation**
9	Lapped seat and PTFE seal	Ensure a tight shut-off at all times Prevent a liquid lock by sealing on the downstream seat only	**Safety** **Reliability** **Performance**
N/A	Pneumatic tyre design actuator	Fast operation of the valve Remote control	**Safety** **Performance**
N/A	Low torque stem	Smooth operation Reduced wear of sealing elements Long life	**Performance** **Reliability**
N/A	Full bore	Low pressure drop Higher flow Reduced vessel filling time	**Performance**

Gate Valves
Technical Information

Bill of Materials

	Description	Stainless Steel with Bronze Internals Manual CMC Series	Stainless Steel with Bronze Internals Actuated CMD Series
1	Body	Stainless Steel ASTM A351 CF8M	
2	Cover	Stainless Steel ASTM A351 CF8M	
3	Stem	Stainless Steel BS EN 10088-3 1.4401	
4	Wedge	Stainless Steel ASTM A351 CF8M	
5	Disc	Phosphor Bronze	
6	Disc Seat Seal	Virgin PTFE	
7	Gland packing	Virgin PTFE	
8	Extension Tube	Stainless Steel ASTM A312 TP304L	
9	Seat	Stainless Steel BS EN 10088-3 1.4401	
10	Gasket	Sigma 511	
11	Fasteners	Stainless Steel BS6105 A2/A4 Gr.70	
12	Handwheel	Aluminum LM4	Stainless Steel ASTM A351 CF8M
N/A	Actuator	N/A	Rubber

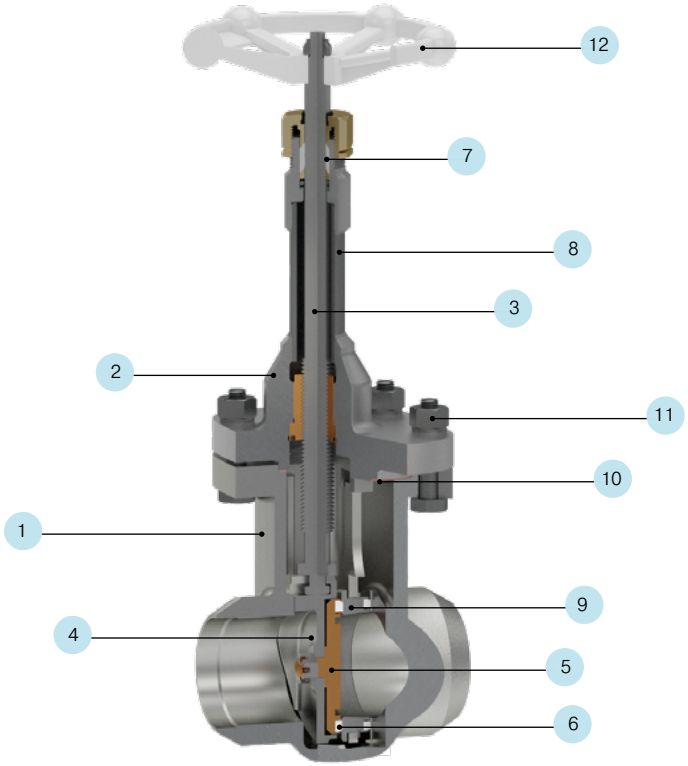

Ordering Information

Manual and Tyre Actuated Gate Valves - Stainless Steel with Bronze Internals
CMC/CMD Series

CMC	DN40	SW	SW	B	2

Series	
Cryogenic Manual Gate Valves - Stainless Steel with Bronze Internals	CMC
Cryogenic Tyre Actuated Gate Valves - Stainless Steel with Bronze Internals	CMD

Valve Size	
40 mm	DN40
50 mm	DN50
65 mm	DN65
80 mm	DN80

Inlet Connection	
Butt Weld Schedule 10	B1

Outlet Connection	
Butt Weld Schedule 10	B1

Bonnet Type	
Bolted	B

Stem Length		
Manual		
DN40	230 mm	2
DN50, DN65	300 mm	3
DN80	400 mm	4
Tyre Actuated		
DN40	300 mm	3
DN50 - DN80	300 mm	3
	500 mm	5

Notes:

1. Inlet and outlet connections must be of the same type.
2. Options available on request:Colored handwheel; DIN/ASME Flanges; Butt Weld Schedule 40; DN100 size valves; Umbrella for actuator; Handwheel for manual override.

Specifications

Butt Weld Ends

Valve Size		DN40 40 mm		DN50 50 mm		DN65 65 mm		DN80 80 mm	
Actuation		Manual	Tyre Actuated	Manual	Tyre Actuated	Manual	Tyre Actuated	Manual	Tyre Actuated
A	mm	130		140		150		150	
B: Closed	mm	326	450	390	495	390	502	500	535
C: Open	mm	363	490	450	540	464	567	595	615
D	mm	102	165	146	240	146	240	146	240
Cv	US GPM	132		240		380		560	
Weight	kg	5.3	13.0	10.4	19.0	12.9	21.7	18.2	27.1

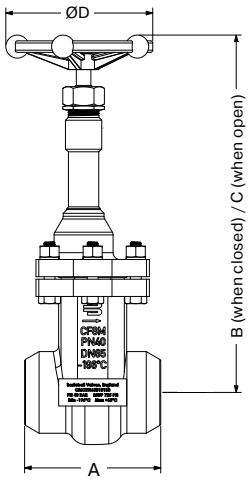

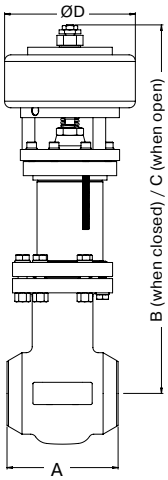

Fill Manifold Assemblies

Overview

Parker Bestobell cryogenic bronze fill manifold assemblies are system-optimizing filling units designed specifically for cryogenic gaseous liquid static storage vessels. They replace the traditional gang of valves along with various pipes and joints while minimizing welding and brazing needs.

The Parker Bestobell cryogenic fill manifold assembly includes:

- Top fill valve
- Bottom fill valve
- Check valve
- Drain valve

A spring-to-close check valve prevents the backwash of media at the end of the filling cycle. A drain valve is used to release trapped media in the fill block. The unit also includes a warm-up leg to connect a thermal relief valve.

The fill manifolds are simple to operate. It involves selecting the valve to operate: top or bottom filling of the tank.

Parker Bestobell supplies these fill assemblies ready to be fitted to the tank, with pipe specifications provided by the customer.

The valves should only be installed in a vertical position.

The cryogenic fill manifold assembly is available with redundant valves which are used for the isolation of the main fill unit when it is under service.

Function:

- Fill valves with check and drain valves

Application:

- Static storage tanks

Top/bottom/check valve Ssze	DN40
Drain valve size	DN15
Maximum Working Pressure (MWP)	Stainless Steel Stubs: 50 bar (725 PSI) Copper Stubs: 32 bar (464 PSI)
Working temperature	-196˚C to +65˚C (-319˚F to +149˚F)
Inlet connections	Mueller Flange
Outlet connections	Stainless Steel/Copper Stubs
Body material	Bronze
Suitable for media type	Group 1 gases Cleaned for oxygen service
Design and testing standards	ASTM B31.1, BS EN 1626, BS ISO 21011 Optional full material traceability backed by BS EN 10204 3.1/3.2 certification
Approvals	CRN, UKCA and PED approved
Marking	CE and UKCA marked

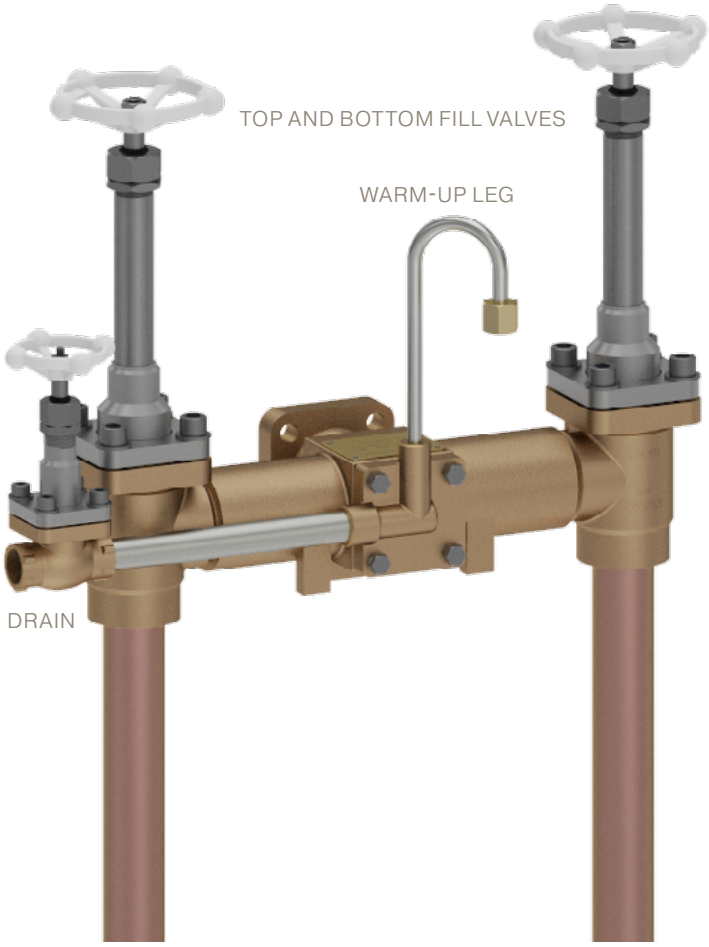

Features, Benefits and Values

Feature	Benefit	Value
Bolted bonnet	Ease of maintenance Reduced maintenance area Allows for thermal expansion and contraction at cryogenic temperatures Eliminates leakage at the bonnet gasket	**Safety** **Reliability** **Ease of Operation**
Anti-blowout stem	The anti-blowout design prevents the stem being pushed out by internal valve pressure during maintenance of the packing A machined flat on the collar prevents liquid from being trapped in the headwork which could lead to a rapid build-up of pressure as liquid warms up	**Safety** **Reliability**
Bearing material insert	Prevents thread galling between stem and cover	**Performance** **Reliability**
Extended stem	Enables an easy access for valve operation and maintenance Prevents the loss of cold energy Prevents the damage of valve packings from low liquid temperatures Ease of usage of the jacketing material	**Performance** **Reliability** **Ease of Operation**
Wiper (dust) seals	Prevent dust, debris, or outside weather conditions from entering the valve Maintain a sealing contact with the stem	**Performance** **Reliability**
Spring-loaded gland packing	Spring maintains the load on the gland for a period of time reducing the frequency of manual adjustment and influence of temperature changes Long service life: 10,000 operations	**Performance** **Reliability**
Disc and seal retention	The absence of threaded components provides total reliability in systems with vibration	**Safety** **Reliability**
One piece body with unique internal design	Reduced number of potential leak paths Simplified piping system Reduced pressure drop Reduced vessel filling time	**Safety** **Reliability** **Performance**
Complete valve assembly	Reduced welding needs Reduced maintenance time	**Performance** **Lower overall cost**

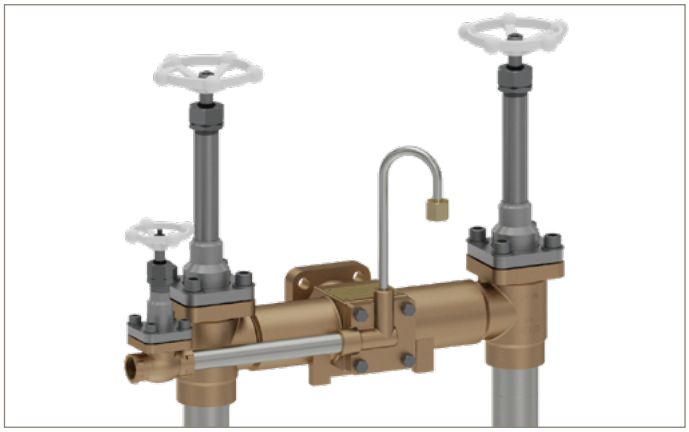

Parker Bestobell Cryogenic Fill Manifold Assembly in Bronze with Mueller Flange Inlet and Stainless Steel Stubs

Parker Bestobell Cryogenic Fill Manifold Assembly in Bronze with Mueller Flange Inlet and Copper Stubs with Redundant Valves

Fill Manifold Assemblies

Technical Information

Bill of Materials

Description	Bronze CTB Series
Body	Gunmetal BS EN 1982 CC491K
Cover	Gunmetal BS EN 1982 CC491K
Stem	Stainless Steel BS EN 10088-3 1.4401
Disc	HT Brass BS EN 12164 CW721R
Seal	PCTFE
Gland packing	Virgin PTFE
Extension tube	Stainless Steel ASTM A312 TP304L
Gasket	Sigma 511
Fasteners	Stainless Steel BS6105 A2/A4 Gr.70
Handwheel	Aluminum LM4
Down pipe	Stainless Steel ASTM A312 TP304L
Central body	Gunmetal BS EN 1982 CC491K
Strainer	Copper / Monel
Spring	Phosphor Bronze BS EN 12163 CW451K

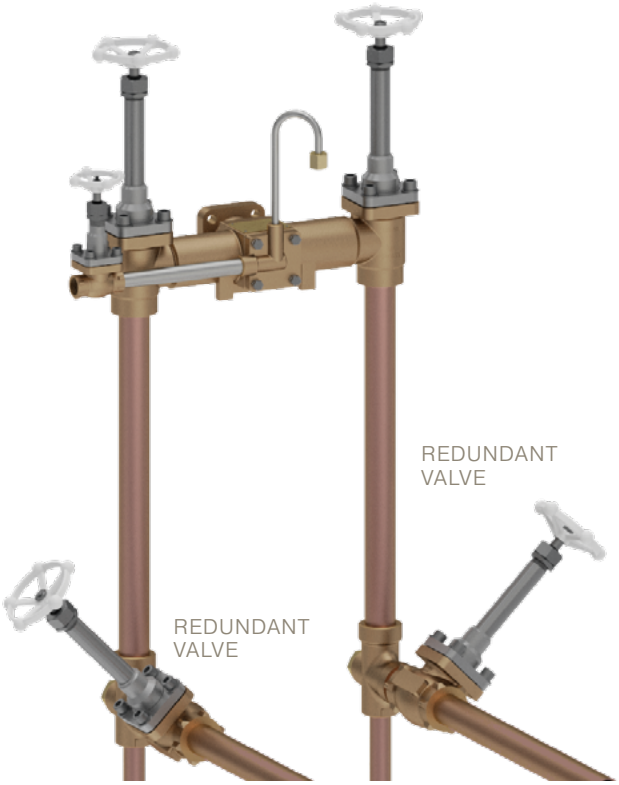

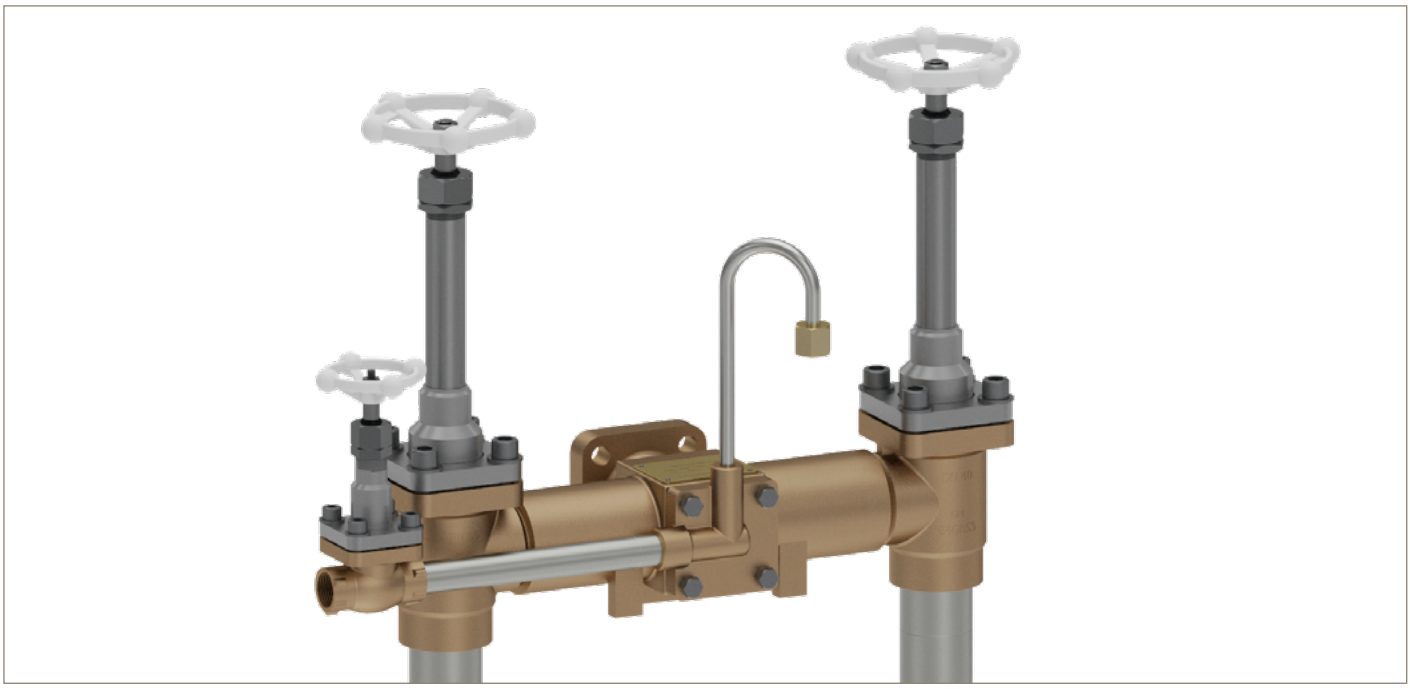

Ordering Information

Fill Manifold Assemblies - Bronze
CTB Series

CTB	DN40	FM	ST	B	2

Series	
Cryogenic Fill Manifold Assemblies - Bronze	CTB

Valve Size	
40 mm	DN40

Inlet Connection	
Mueller Flange	FM

Outlet Connection	
Stainless Steel Stubs	ST
Copper Stubs	CT
Copper Stubs with Redundant Valves	RT

Bonnet Type	
Bolted	B

Stem Length	
230 mm	2

Note:

Options available on request: Colored handwheel; Non-extended, 300 mm stem extension; Various flanged inlet connections; Stainless Steel valve body material.

Specifications

Stubs

Valve Size		DN40 40 mm	
Stubs Material		Stainless Steel Stubs	Copper Stubs
A	mm	301	
B	mm	85	
C	mm	230	
D	mm	121	
E	mm	90	
F	US GPM	118	
G		1-1/2" NB Schedule 10	Ø 1-5/8" x 1.83 Thick
Cv	US GPM	26.5	
Weight	kg	17.3	19.1
Stub Length	mm	77	473

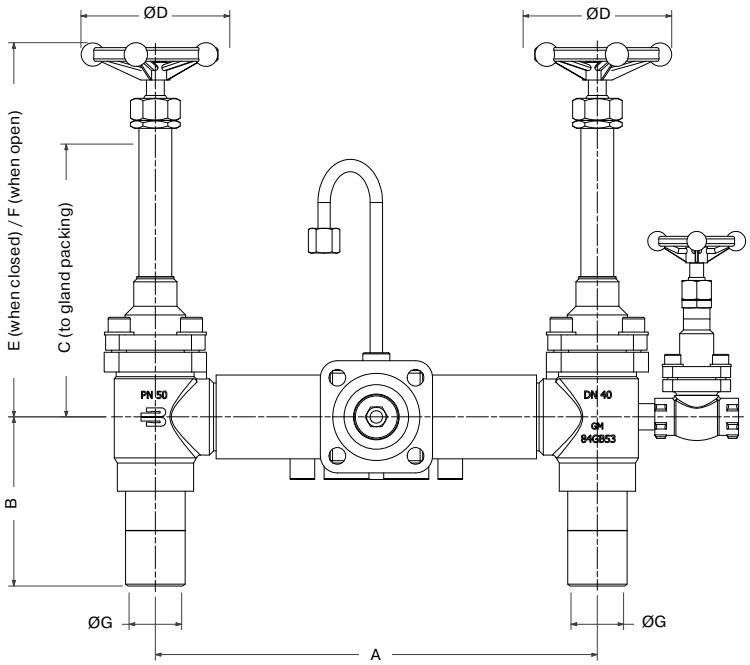

Ball Valves

Overview

Parker Bestobell cryogenic uni-directional ball valves are used as shut-off valves in low-temperature applications.

These valves are available in full and reduced bore designs.
The cryogenic full bore ball valves deliver a high flow of media and decreased pressure drop. They are suitable for filling stations and portable delivery systems, providing faster opening and closing times, and reducing the filling time.

The cryogenic reduced port ball valves are more compact than full bore ball valves, which makes them suitable for systems with confined space. These valves are also about 30% lighter than the full bore ball valves, which reduces the pipe load and transportation costs.

The preferred orientation of the Parker Bestobell cryogenic ball valves is vertical. It should not be less than 30° from the horizontal position if installed at an angle. The relief hole in the ball should be facing upstream when the valve is in the closed position.

Parker Bestobell cryogenic ball valves are available as manual and pneumatic actuation types.
The uni-directional pneumatic actuated valves are used for shut-off of flow and enable remote control.

Function:

- Shut off

Applications:

- Fill or drain lines
- Transportation of Liquefied Gases
- Storage of Liquefied Gases

Valve size	DN15 - DN50
Maximum Working Pressure (MWP)	50 bar (725 PSI) dependent on end connections
Working temperature	-196°C to +65°C (-319°F to +149°F)
End connections	NPT, BSP, Socket Weld, Butt Weld
Body materials	Bronze, Stainless Steel
Suitable for media type	Group 1 gases Cleaned for oxygen service
Design and testing standards	ASTM B31.1, BS EN 1626, BS ISO 21011 Optional full material traceability backed by BS EN 10204 3.1/3.2 certification
Approvals	CRN, UKCA and PED approved
Marking	CE and UKCA marked
Pneumatic Actuator	• Max. air pressure: 8 bar (116 PSI) • Working temperature: –20°C to +80°C (-4°F to + 176°F) • Inlet connections: 1/8" or 1/4" BSP-PL (ISO 228) dependent on actuator size

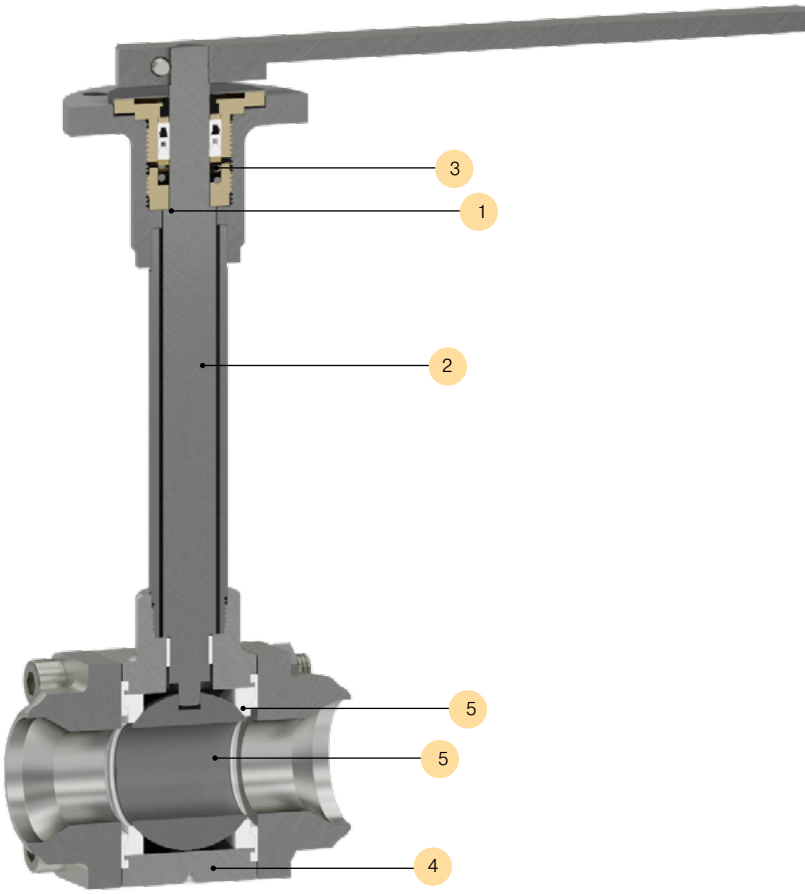

Features, Benefits and Values

Reference	Feature	Benefit	Value
1	Anti-blowout stem	The anti-blowout design prevents the stem being pushed out by internal valve pressure during maintenance of the packing A machined flat on the collar prevents liquid from being trapped in the headwork which could lead to a rapid build-up of pressure as liquid warms up	**Safety** **Reliability**
2	Extended stem	Enables an easy access for valve operation and maintenance Prevents the loss of cold energy Prevents the damage of valve packings from low liquid temperatures Ease of use of the jacketing material	**Performance** **Reliability** **Ease of Operation**
3	Spring-loaded gland packing	Spring maintains the load on the gland for a period of time reducing the frequency of manual adjustment and influence of temperature changes Long service life: 10,000 operations	**Performance** **Reliability**
4	Removable centre section	Interchangeability in existing installations	**Ease of Operation**
5	Replaceable disc and seat	Ease of maintenance	**Ease to Operation**
N/A	Relief hole	Prevents trapping of liquefied gases, when the ball rotates into the closed position.	**Safety** **Reliability**
N/A	Full bore	High flow Low pressure drop Quick filling	**Performance**
N/A	Reduced bore	Require smaller installation space 30% lighter than full bore ball valve	**Ease of Operation** **Overall cost**
N/A	Quarter-turn valve	Fast opening Ease of actuation	**Performance** **Ease of Operation** **Safety**
N/A	Rack & pinion pneumatic actuator	Fast operation of the valve Remote control Easy convert from manual to actuated due to the ISO mounting flange	**Safety** **Ease of Operation** **Performance**
N/A	Visual detection	Open and close state of valve can be visually detected by position of the handle	**Safety** **Ease to Operation**

Ball Valves

Technical Information

Bill of Materials

	Description	Bronze	Full Stainless Steel
1	Body	Gunmetal BS EN 1982 CC491K	Stainless Steel ASTM A351 CF8M
2	End adaptors	Gunmetal BS EN 1982 CC491K	Stainless Steel ASTM A351 CF8M
3	Stem	Stainless Steel BS EN 10088-3 1.4401	
4	Ball	Brass BS EN 12164 CW614N	Stainless Steel 316 S31 BS970
5	Ball seal	Hostaflon	
6	Gland housing	Stainless Steel ASTM A351 CF8M	
7	Extension tube	Stainless Steel ASTM A269 TP304L	
8	End adaptor seal	Virgin PTFE	
9	Gland packing	Virgin PTFE	
10	Fasteners	Stainless Steel BS6105 A2/A4 Gr.70	
11	Lever	Stainless Steel ASTM A351 CF8M	

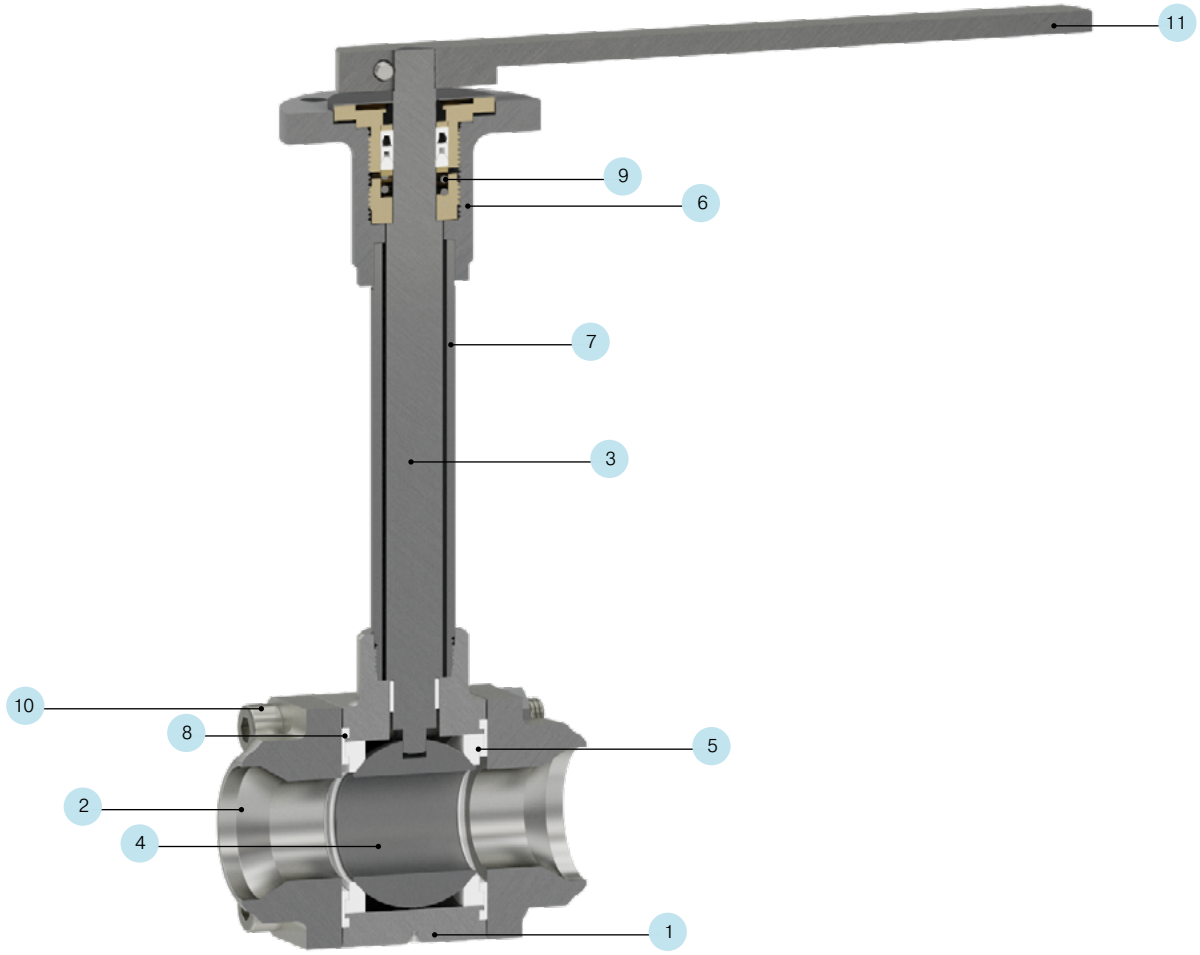

Ordering Information

Manual and Actuated Ball Valves - Bronze and Full Stainless Steel

CZF Series

CZFF	DN15	B	TA	TA	2	A

Series	
Cryogenic Ball Valves - Full Bore	CZFF
Cryogenic Ball Valves - Reduced Bore	CZFR

Valve Size	
15 mm	DN15
25 mm	DN25
40 mm	DN40
50 mm*	DN50

* Reduced bore valves (CZFR) only

Body Material	
Bronze	B
Full Stainless Steel	S

Inlet Connection		
Bronze	BSP-PL Female	TA
	NPT Female	TE
Full Stainless Steel	Butt Weld schedule 10	B1
	Socket Weld	SW

Outlet Connection		
Bronze	BSP-PL Female	TA
	NPT Female	TE
Full Stainless Steel	Butt Weld schedule 10	B1
	Socket Weld	SW

Stem Length	
230 mm	2

Actuation	
Manual	*
Pneumatic Actuator	A

* No designator required

Notes:

1. Inlet and outlet connections must be of the same type.
2. Options available on request: Flanged end connections; Rack & Pinion Pneumatic Actuator with solenoid valve; Positioner; Switch limit; Coloured lever.

Specifications

Threaded/Butt Weld/Socket Weld Ends

Valve Size		DN15 15 mm		DN25 25 mm		DN40 40 mm		DN50 50 mm	
Actuation		Manual	Pneumatic	Manual	Pneumatic	Manual	Pneumatic	Manual	Pneumatic
Full Bore	mm	15		25		40		N/A	
Reduced Bore	mm	11		20		32		37	
A	mm	230							
B	mm	250	352	250	352	250	405	250	405
C	mm	21		32		49		56	
D	mm	67		96		117		129	
E	mm	190	210	190	210	230	315	230	315
Cv	US GPM	9		30		90		138	
Weight	kg	2.1	4.7	3.0	5.5	4.7	15.5	6.8	16.0

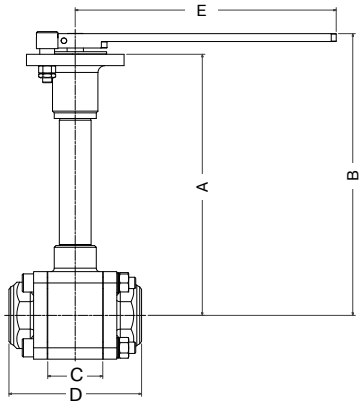

Check Valves

Overview

Parker Bestobell cryogenic check valves are used in pipelines to prevent the backflow of the media. Parker Bestobell offers two types of cryogenic check valves: lift and swing check valves.

Lift check valves are recommended for use with pipelines with high pressures. The media to lift check valves must always enter below the seat. The valve's disc is then lifted off its seat by higher pressure of inlet media to allow flow to the outlet end. Parker Bestobell cryogenic lift check valves feature a cone seat design for a tight shut-off. A guideway keeps the motion of the disc on a vertical line, so the check valve can reseat properly when the flow stops by gravity or is reversed by backflow. These lift check valves are suitable for installation with the upward flow in a horizontal or vertical position. When a lift check valve is installed in a vertical position, a spring is required to assist the valve disc in lifting against gravity and allowing the fluid to flow through valve.

Parker Bestobell cryogenic swing check valves have a full bore design with a wide opening that allows high flow rates at low-pressure drops. These valves should not be used on lines with pulsating flow, where a constantly fluctuating disc can destroy the seating elements. A swing check valve automatically closes as pressure decreases and prevents backflow. These swing check valves can be installed horizontally or vertically, with the flow running upward. When a swing check valve is installed in a vertical position, a small angle of installation is typically required to allow the disc to seat properly and prevent backflow.

Function:

- Non-return valve
- Backflow prevention

Applications:

- Transportation of Liquefied Gases
- Storages of Liquefied Gases
- Gas Processing

Valve size	DN15 - DN100
Maximum Working Pressure (MWP)	50 bar (725 PSI) dependent on end connections
Working temperature	-196°C to +65°C (-319°F to +149°F)
End connections	NPT, BSP, Socket Weld, Butt Weld, Flanged
Body materials	Bronze, Stainless Steel
Suitable for media type	Group 1 gases Cleaned for oxygen service
Design and testing standards	ASTM B31.1, BS EN 1626, BS ISO 21011 Optional full material traceability backed by BS EN 10204 3.1/3.2 certification
Approvals	CRN, UKCA and PED approved
Marking	CE and UKCA marked

Parker Bestobell Cryogenic Bronze Lift Check Valve (DN 25; BSP-PL Female Ends)

Parker Bestobell Cryogenic Full Stainless Steel Swing Check Valve (DN 25; BSP-PL Female Ends)

Features, Benefits and Values

Reference	Feature	Benefit	Value
1	Bolted bonnet	Ease of maintenance Reduced maintenance area Allows for thermal expansion and contraction at cryogenic temperatures Eliminates leakage at the bonnet gasket	**Safety** **Reliability** **Ease to Operation**
2	Replaceable disc and seal	Ease of maintenance	**Ease to Operation**
3	PTFE seal	Ensures tight shut off Fast/easy maintenance	**Safety** **Ease to Operation**
4	Offset centre of gravity of the disc (swing check valves only)	Ensures valve is fully closed when the flow reaches zero	**Safety**
5	Unique cover (swing check valves only)	Error-proof (Poka Yoke) design and flow direction arrow prevent incorrect valve installation	**Safety** **Ease to Operation**
N/A	Full bore	High flow Low pressure drop Increased media velocity	**Performance**

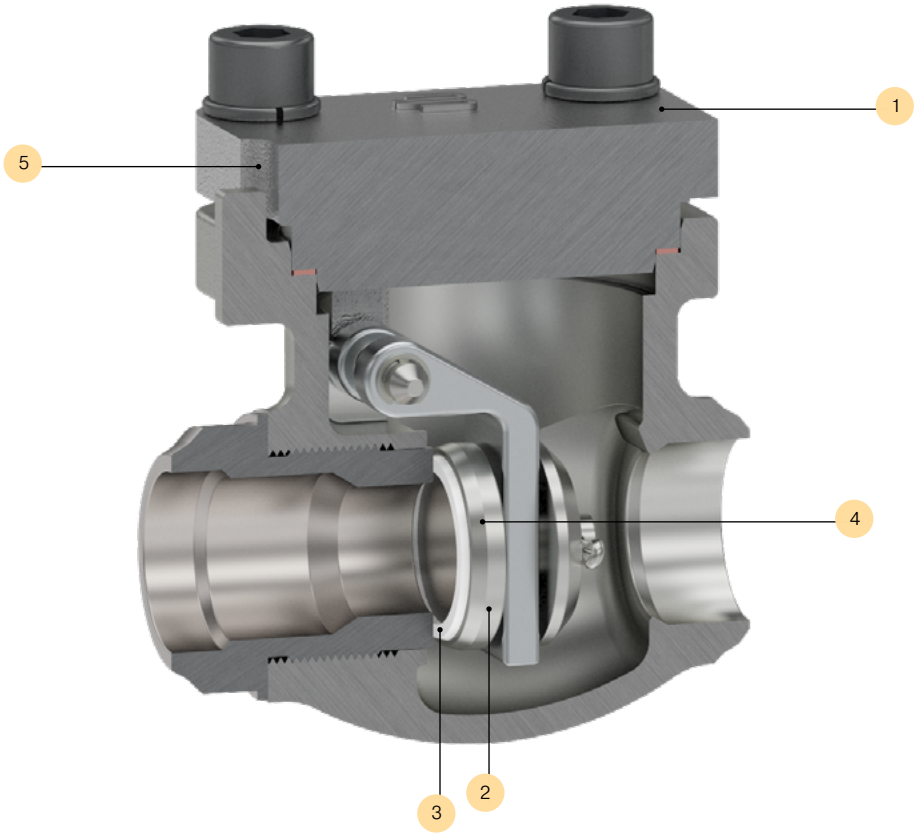

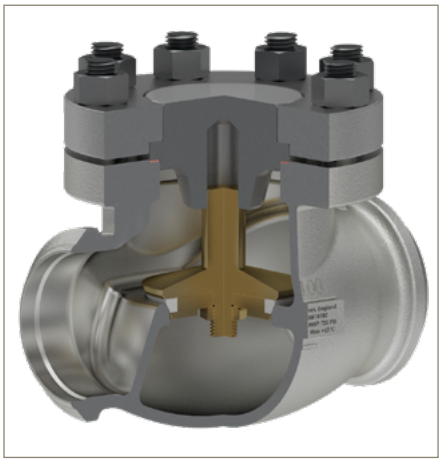

Check Valves

Technical Information

Bill of Materials

	Description	Bronze	Stainless Steel with Bronze Internals	Full Stainless Steel
		Lift Check Valve CGB Series	Lift Check Valve CGT Series	Swing Check valve CHC Series
1	Body	Gun Metal BS EN 1982 CC491K	Stainless Steel ASTM A351 CF8M	
2	Cover	Stainless Steel BS EN 10088-3 1.4301		Stainless Steel ASTM A351 CF8M
3	Disc	HT Brass BS EN 12164 CW 721R		Stainless Steel BS EN 10088-3 1.4401
4	Seal	Virgin PTFE		
5	Gasket	Sigma 511		
6	Fasteners	Stainless Steel ASTM A351 CF8M		
7	Bonnet flange	Stainless Steel ASTM A269 TP304L		N/A
8	Arm	N/A		Stainless Steel ASTM A351 CF8M

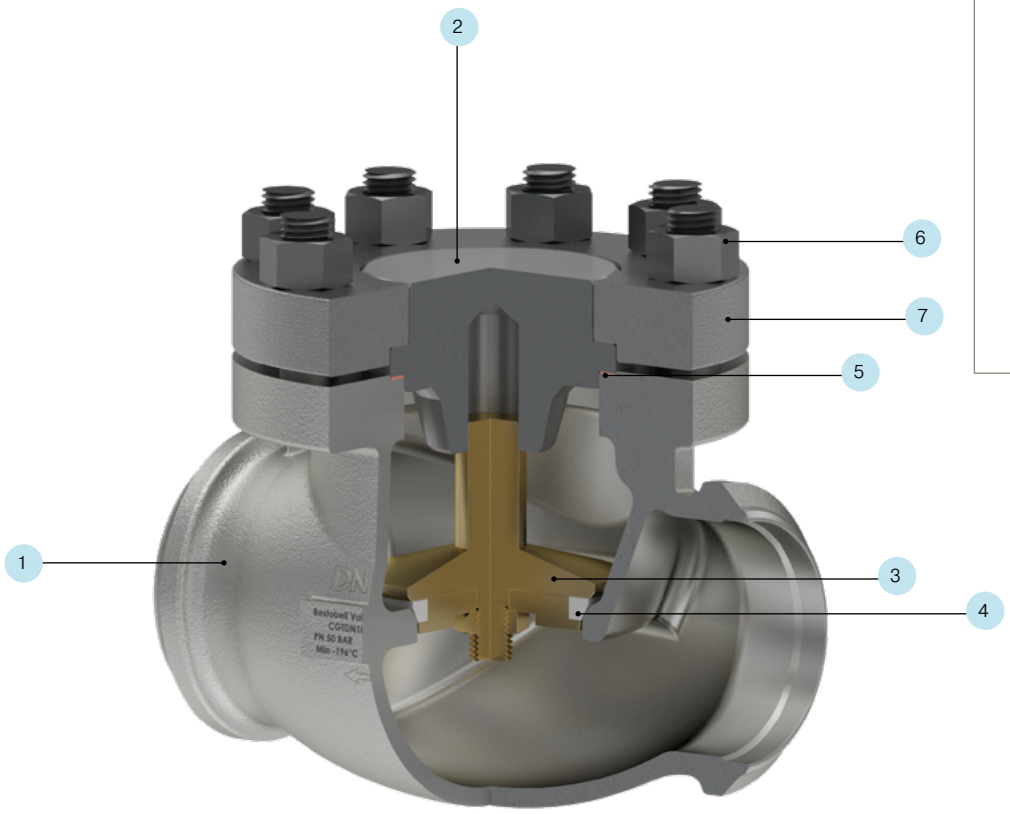

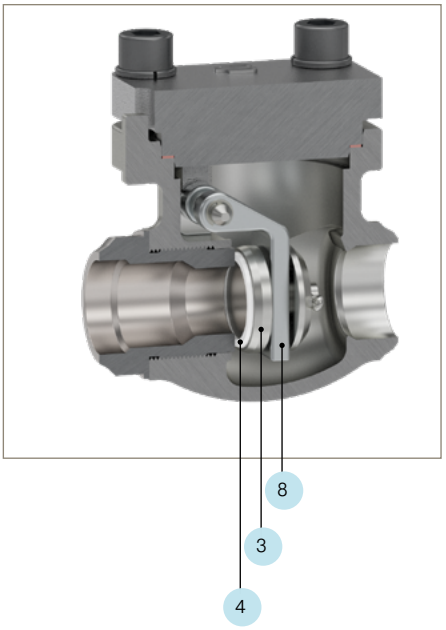

Ordering Information

Lift Check Valves - Bronze
CGB Series

CGB	DN15	TA	TA	B

Series	
Cryogenic Lift Check Valves - Bronze	CGB

Valve Size	
15 mm	DN15
25 mm	DN25
40 mm	DN40
50 mm	DN50

Inlet Connection	
BSP-PL Female	TA
NPT Female	TE
Screwed Schedule 10 Stainless Steel Stubs	ST

Outlet Connection	
BSP-PL Female	TA
NPT Female	TE
Screwed Schedule 10 Stainless Steel Stubs	ST

Bonnet Type	
Bolted	B

Notes:

1. Inlet and outlet connections must be of the same type.
2. Options available on request: Spring-loaded; DN6, DN10 size valves; Socket Weld end connections.

Specifications

Threaded Ends/Threaded Ends with Stainless Steel Stubs

Valve Size		DN15 15 mm	DN25 25 mm	DN40 40 mm	DN50 50 mm
A	mm	68	92	121	146
B	mm	51	71	84	107
C	mm	55	66	81	108
Cv	US GPM	3.6	13.2	26.5	43.0
Weight	kg	1.0	1.8	3.7	6.4
Opening Pressure	PSI	0.37	0.37	0.24	0.21

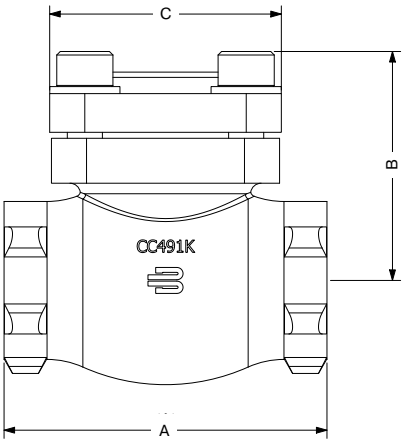

Check Valves

Ordering Information

Lift Check Valves - Stainless Steel with Bronze Internals

CGT Series

CGT **DN25** **B1** **B1** **B**

Series	
Cryogenic Lift Check Valves - Stainless Steel with Bronze Internals	CGT

Valve Size	
15 mm	DN15
25 mm	DN25
40 mm	DN40
50 mm	DN50
65 mm	DN65
80 mm	DN80
100 mm	DN100

Inlet Connection	
Butt Weld Schedule 10	B1
Socket Weld	SW

Outlet Connection	
Butt Weld Schedule 10	B1
Socket Weld	SW

Bonnet Type	
Bolted	B

Notes:

1. Inlet and outlet connections must be of the same type.
2. Options available on request: Spring; Butt Weld Schedule 40; DN6, DN10, DN150 size valves.

Specifications

Butt Weld/Socket Weld Ends

Valve Size		DN15 15 mm	DN25 25 mm	DN40 40 mm	DN50 50 mm	DN65 65 mm	DN80 80 mm	DN100 100 mm
A	mm	68	92	121	146	178	178	292
B	mm	51	71	84	107	145	145	193
C	mm	55	66	81	108	130	133	169
Cv	US GPM	3.6	13.2	26.5	43.0	68	98	174
Weight	kg	1.0	1.6	3.2	6.5	9.0	13.4	35.0
Opening pressure	PSI	0.37	0.37	0.24	0.21	0.25	0.27	0.34

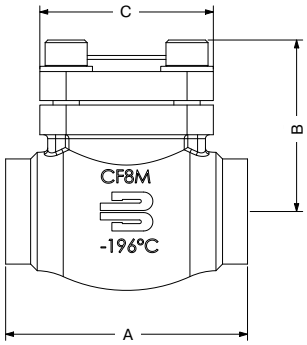

Swing Check Valves - Full Stainless Steel
CHC Series

CHC	DN25	B1	B1

Series	
Cryogenic Swing Check Valves - Full Stainless Steel	CHC

Valve Size	
25 mm	DN25
40 mm	DN40
50 mm	DN50
80 mm	DN80

Inlet Connection	
Butt Weld Schedule 10	B1
Flange ASME CL150	FA
Flange ASME CL300	FC

Outlet Connection	
Butt Weld Schedule 10	B1
Flange ASME CL150	FA
Flange ASME CL300	FC

Notes:

1. Inlet and outlet connections must be of the same type.
2. Options available on request: DIN Flanges; Butt Weld Schedule 40; Socket Weld: DN65, DN100 (only flanged end connections CL150).

Specifications

Butt Weld/Socket Weld Ends

Valve Size		DN25 25 mm	DN40 40 mm	DN50 50 mm	DN80 80 mm
A	mm	92	121	146	260
B	mm	64	73	92	110
C	mm	70	110	125	155
Cv	US GPM	20	48	90	192
Weight	kg	2.0	3.8	5.9	15.2
Opening pressure	PSI	0.21	0.22	0.22	0.50

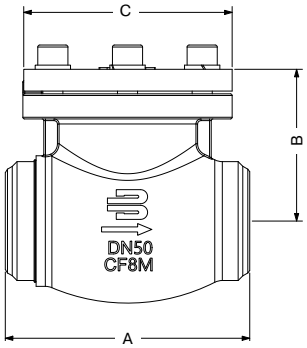

Flanged Ends

Valve Size			DN25 25 mm	DN40 40 mm	DN50 50 mm	DN80 80 mm
A	mm	Class 150	127	200	203	241
		Class 300	208	N/A	267	N/A
G	mm	Class 150	123.8	127.0	152.4	190.5
		Class 300	108.0	N/A	165.0	N/A
Flange thickness	mm	Class 150	11.00	19.05	19.05	23.80
		Class 300	17.50	N/A	22.20	N/A
Weight	kg	Class 150	3.2	7.2	8.0	20.0
		Class 300	4.0	N/A	9.0	N/A

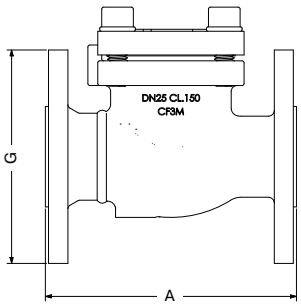

Dimensions B, C and Cv values are the same as for Butt Weld/Socket Weld ends.

Strainers

Overview

Parker Bestobell cryogenic T-type strainers are used in pipelines to prevent contaminants from entering an end product in industrial gas applications. The large clearance around the entire strainer circumference ensures an effective straining function. The 100 mesh strainer element is compatible with all common cryogenic liquids and gases and is supported by a metal cylinder for additional strength.

These cryogenic strainers should only be installed horizontally with the cover at the bottom.

Valve size	DN15 - DN100
Maximum Working Pressure (MWP)	50 bar (725 PSI) dependent on end connections
Working temperature	-196°C to +65°C (-319°F to +149°F)
End connections	NPT, BSP, Socket Weld, Butt Weld, Flanged
Body materials	Bronze, Stainless Steel
Suitable for media type	Group 1 gases Cleaned for oxygen service
Design and testing standards	ASTM B31.1, BS EN 1626, BS ISO 21011 Optional full material traceability backed by BS EN 10204 3.1/3.2 certification
Approvals	CRN, UKCA and PED approved
Marking	CE and UKCA marked

Function:

- Prevent contaminants in media

Applications:

- Transportation of Liquefied Gases
- Storages of Liquefied Gases
- Gas Processing

Parker Bestobell Cryogenic Strainer in Bronze (DN 50; BSP-PL Female Ends)

Parker Bestobell Cryogenic Strainer in Stainless Steel (DN 40; Butt Weld Schedule 10 Ends)

Parker Bestobell Cryogenic Strainer in Stainless Steel (DN 40; Flange ASME CL150 Ends)

Features, Benefits and Values

Reference	Feature	Benefit	Value
A	Bolted bonnet	Ease of maintenance Reduced maintenance area Allows for thermal expansion and contraction at cryogenic temperatures Eliminates leakage at the bonnet gasket	**Safety** **Reliability** **Ease of Operation**
B	Large strainer area	Ensures full flow of fluid through the unit	**Performance**
N/A	Full bore	High flow Low pressure drop Increased media velocity	**Performance**

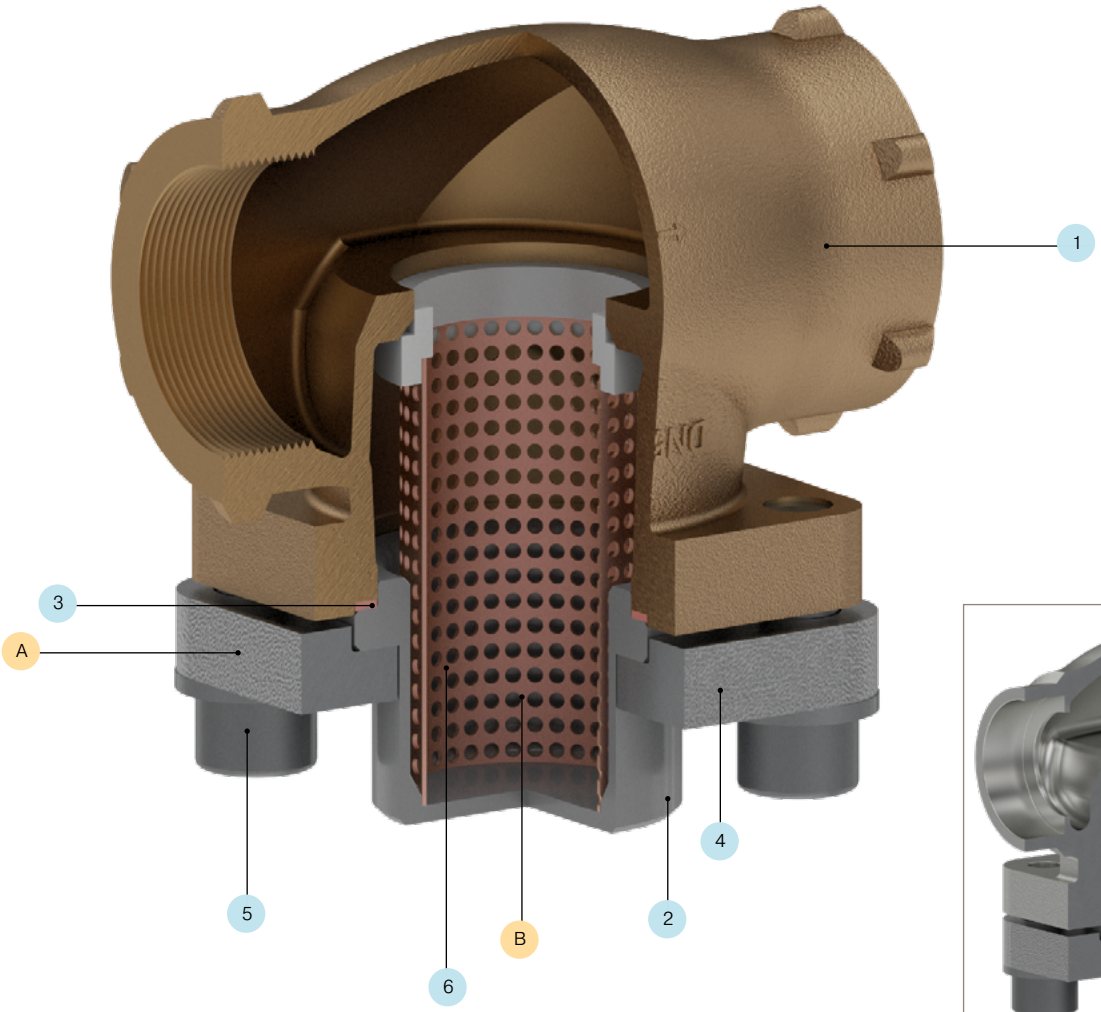

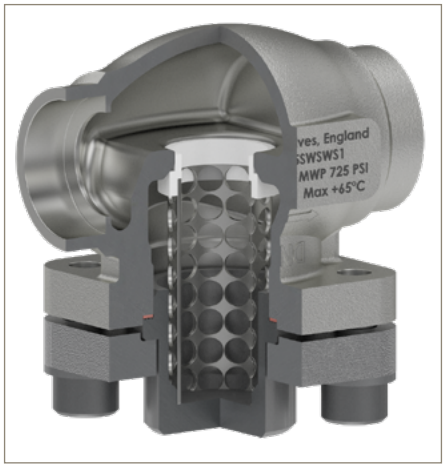

Technical Information

Bill of Materials

	Description	Bronze CSB Series	Stainless Steel CSS Series
1	Body	Gunmetal BS EN 1982 CC491K	Stainless Steel ASTM A351 CF8M
2	Cover	Stainless Steel BS EN 10088-3 1.4401	
3	Gasket	Sigma 511	
4	Loose Flange	Stainless Steel ASTM A351 CF8M	
5	Fasteners	Stainless Steel BS6105 A2 / A4 Gr.70	
6	Filter	Copper / Monel Gauze / Stainless Steel 304	

Strainers

Ordering Information

Strainers - Bronze

CSB Series

CSB	DN25	TE	TE	F	1

Series	
Cryogenic Strainers - Bronze	CSB

Valve Size	
15 mm	DN15
25 mm	DN25
40 mm	DN40
50 mm	DN50

Inlet Connection	
BSP-PL Female	TA
NPT Female	TE
Screwed Schedule 10 Stainless Steel Stubs	ST

Outlet Connection	
BSP-PL Female	TA
NPT Female	TE
Screwed Schedule 10 Stainless Steel Stubs	ST

Filter Material	
Copper/Monel	F
Stainless Steel	S

Filter Size	
100 Mesh	1
40 Mesh	4
60 Mesh	6

Notes:

1. Inlet and outlet connections must be of the same type.
2. Options available on request: DN6, DN10 size valves; Socket Weld end connections.

Specifications

Threaded Ends/Threaded Ends with Stainless Steel Stubs

Valve Size		DN15 15 mm	DN25 25 mm	DN40 40 mm	DN50 50 mm
A	mm	68	92	121	146
B	mm	55	66	81	108
Cv	US GPM	16	44	80	128
Weight	kg	1.0	1.8	3.1	5.1

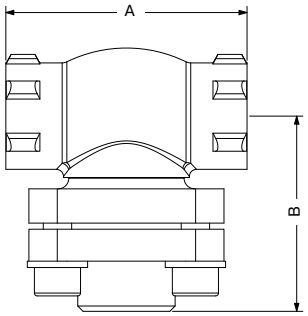

Strainers - Full Stainless Steel

CSS Series

CSS	DN40	FA	FA	F	1

Series	
Cryogenic Strainers - Full Stainless Steel	CSS

Valve Size	
15 mm	DN15
25 mm	DN25
40 mm	DN40
50 mm	DN50
65 mm	DN65
80 mm	DN80
100 mm	DN100

Inlet Connection	
Butt Weld Schedule 10	B1
Socket Weld	SW
Flange ASME CL150	FA
Flange ASME CL300	FC

Outlet Connection	
Butt Weld Schedule 10	B1
Socket Weld	SW
Flange ASME CL150	FA
Flange ASME CL300	FC

Filter Material	
Copper/Monel	F
Stainless Steel	S

Filter Size	
100 Mesh	1
40 Mesh	4
60 Mesh	6

Notes:

1. Inlet and outlet connections must be of the same type.
2. Options available on request: DIN Flanges; Butt Weld Schedule 40; DN6, DN10, DN150 size valves.

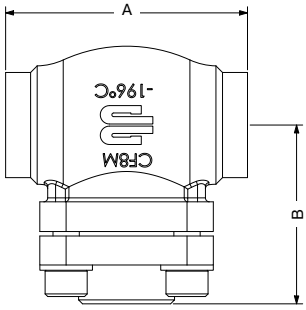

Specifications

Butt Weld/Socket Weld Ends

Valve Size		DN15 15 mm	DN25 25 mm	DN40 40 mm	DN50 50 mm	DN65 65 mm	DN80 80 mm	DN100 100 mm
A	mm	68	92	121	146	178	178	292
B	mm	55	66	81	108	145	160	229
Cv	US GPM	16	44	80	128	192	260	390
Weight	kg	1.0	2.0	2.6	5.4	7.0	10.0	33.0

Flanged Ends

Valve Size			DN15 15 mm	DN25 25 mm	DN40 40 mm	DN50 50 mm	DN65 65 mm	DN80 80 mm	DN100 100 mm
A	mm	Class 150	115	140	165	203	216	243	350
		Class 300	130	160	200	230	290	310	350
G	mm	Class 150	89	108	127	152	178	190	228
		Class 300	95	124	155	165	191	210	254
Flange thickness	mm	Class 150	13.00	14.50	17.50	19.05	25.40	24.90	23.90
		Class 300	14.00	18.00	21.00	22.00	25.00	28.00	32.00
Weight	kg	Class 150	2.0	4.3	8.3	13.0	18.8	26.5	46.0
		Class 300	2.2	4.5	8.6	13.5	19.5	27.4	53.0

Dimension B and Cv values are the same as for Butt Weld/Socket Weld ends.

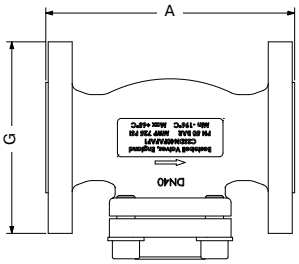

Safety Relief Valves

Overview

Parker Bestobell cryogenic safety relief valves are designed to protect piping, cryogenic static storage, and trailer tanks against damage from excessive over-pressure.

Each relief valve is characterized by a set pressure, which is the pressure at which the valve starts to open to discharge the excess pressure in the tank or piping. The Parker Bestobell cryogenic safety relief valve is designed with an accuracy of +-3%, which means that the valve starts to open within the limits of +-3% of the set pressure.

When the excess pressure is released, the valve returns to the closed position (reseats), thus preventing the waste of expensive cryogenic gases.
The valve's minimum pressure when closed, is around 92% of the set pressure.

Function:

- Prevents over-pressure

Applications:

- Transportation of Liquefied Gases
- Storages of Liquefied Gases
- Gas Processing

A lift-limiting stop helps prevent valve instability when discharging from or into the lengthy piping runs that can be a part of cryogenic systems.

Each valve is individually set to the required set pressure, which is clearly marked on the body, flow tested, and then stamped with the date of manufacture and its own unique serial number before dispatch. All valves are supplied protected with a tamper-proof seal.

Parker Bestobell cryogenic safety relief valves are available in three sizes, defined by the orifice diameter. Each size is available with a variety of inlet and outlet connections.

The valve must be installed vertically only.

Valve size	DN10 - DN20
Maximum Working Pressure (MWP)	Bronze: 40 bar (580 PSI) Stainless Steel: 30 bar (435 PSI)
Working temperature	-196°C to +65°C (-319°F to +149°F)
End connections	NPT, BSP
Body materials	Bronze, Stainless Steel
Suitable for media type	Group 1 gases Cleaned for oxygen service
Design and testing standards	ASTM B31.1, BS EN 1626, BS ISO 21011 Optional full material traceability backed by BS EN 10204 3.1/3.2 certification
Approvals	CRN, UKCA and PED approved
Marking	CE and UKCA marked

Features, Benefits and Values

Reference	Feature	Benefit	Value
A	Lift-limiting stop	Smooth operation Constant discharge pressure	Safety Performance Reliability
B	Unique serial number	Helps to identify each item Warranty control Enables location of the relevant certificate	Performance
C	Reseat design	Recloses and prevents loss of fluid when system pressure returns to acceptable	Performance Lower overall cost
D	Anti-tamper	Protection from unauthorized tampering	Safety
N/A	Weather proof cap	Prevents dirt and moisture from entering the valve	Reliability
N/A	Lever	Manual override to open the valve manually and release pressure from the valve in case of emergency	Performance & Safety

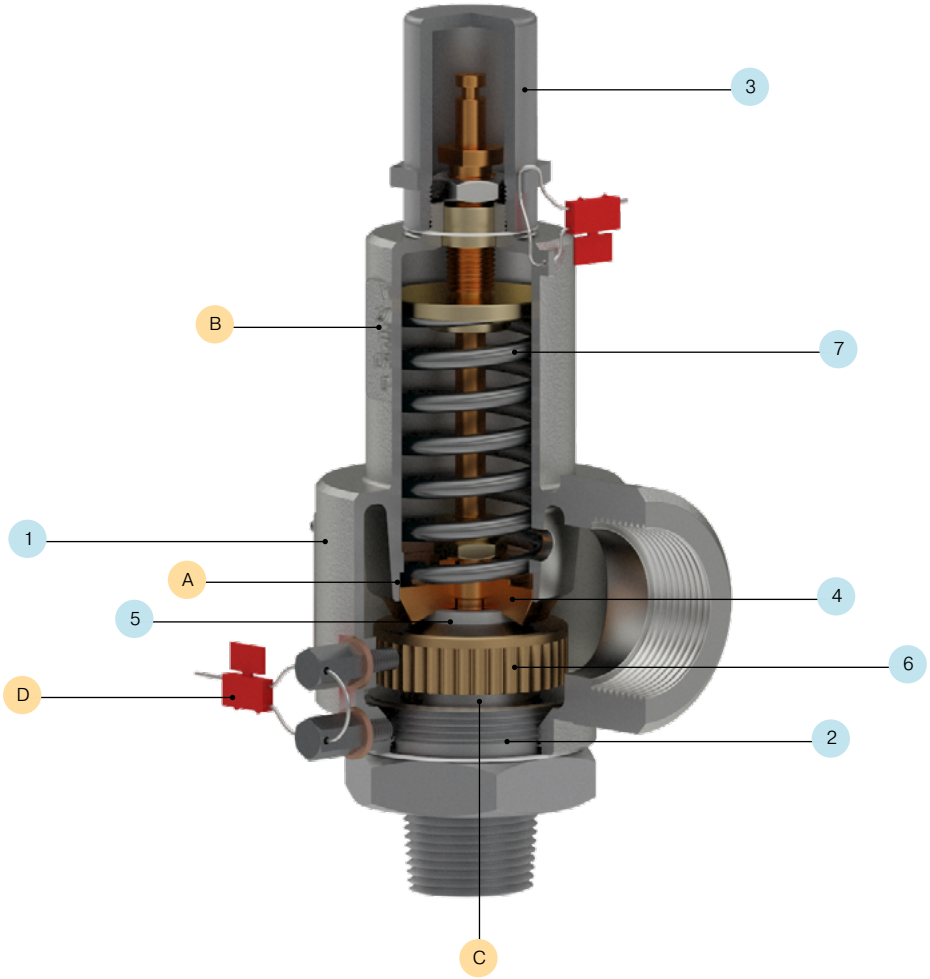

Technical Information

Bill of Materials

	Description	Bronze CWF,CWL Series	Stainless Steel CWT Series
1	Body	Gunmetal BS EN 1982 CC491K	Stainless Steel ASTM A351 CF8M
2	Seat	HT Brass BS EN 12164 CW721R	Stainless Steel 316 BS EN10088-3 1.4401
3	Adjusting cap	Gunmetal BS EN 1982 CC491K	Stainless Steel ASTM A351 CF8M
4	Disc DN10	Brass BS EN 12163 CW712R	
	Disc DN15, DN20	Phosphor Bronze BS EN 12163 CW451R	
5	Seal	PTFE TF7196	
6	Blow down ring	Gunmetal BS EN 1982 CC491K	Stainless Steel ASTM A351 CF8M
7	Spring	Stainless Steel 302 S26 BS2056	
N/A	Weather proof cap	HT Brass BS EN 12164 CW721R	Stainless Steel 316 BS EN 10088-3 1.4401
N/A	Lever	Gunmetal BS EN 1982 CC491K	N/A

Safety Relief Valves

Ordering Information

Safety Relief Valves - Orifice Diameter 11.4 mm

CWF20/CWL20/CWT20/CWS20 Series

CWF **20** **J** **M** **55** **A**

Series	
Cryogenic Safety Relief Valves - Bronze (without lever)	CWF
Cryogenic Safety Relief Valves - Bronze (with lever)	CWL
Cryogenic Safety Relief Valves - Stainless Steel with Bronze Internals (without lever)	CWT
Cryogenic Safety Relief Valves – Full Stainless Steel (Without lever)	CWS

Valve Size	
DN 10	20

Inlet Connection	
1/2" BSP-PL Male	J
1/2" BSP-TR Male	K
1/2" NPT Male	L
3/4" BSP-PL Male	M
3/4" BSP-PL Male c/w 60 Deg Cone	N
3/4" BSP-TR Male	P
3/4" NPT Male	R

Outlet Connection	
3/4" BSP-PL Female	H
3/4" BSP-TR Female	J
3/4" NPT Female	K
1" BSP-PL Female	L
1" BSP-TR Female	N
1" NPT Female	R

Set Pressure (in PSI)
Insert number from 25 to 580 (See table 1)

Options (Bronze valves only)	
No Drain	*
Elbow[3]	A
Inlet Adaptor, Elbow, Downpipe & Coupling[3]	B
Inlet Adaptor	C
Elbow, Downpipe & Coupling[3]	D

*No designator required.

Table 1 - Set Pressure (in PSI)

25	41	57	73	92	116	140	164	188	212	245	285	325	365	405	445	485	525	565
27	43	59	75	95	119	143	167	191	215	250	290	330	370	410	450	490	530	570
29	45	61	77	98	122	146	170	194	218	255	295	335	375	415	455	495	535	575
31	47	63	79	101	125	149	173	197	220	260	300	340	380	420	460	500	540	580
33	49	65	80	104	128	152	176	200	225	265	305	345	385	425	465	505	545	
35	51	67	83	107	131	155	179	203	230	270	310	350	390	430	470	510	550	
37	53	69	86	110	134	158	182	206	235	275	315	355	395	435	475	515	555	
39	55	71	89	113	137	161	185	209	240	280	320	360	400	440	480	520	560	

Notes:

1. Inlet and outlet connections can be of different types.
2. Offered with No Drain as standard. See the table above for available options.
3. Any connection requiring the use of an elbow must be made to outlet 1" BSP-PL Female "L" on the body.

Parker Bestobell Cryogenic Safety Relief Valve in Stainless Steel without Lever (Male NPT Inlet x Female NPT Outlet; No Drain)

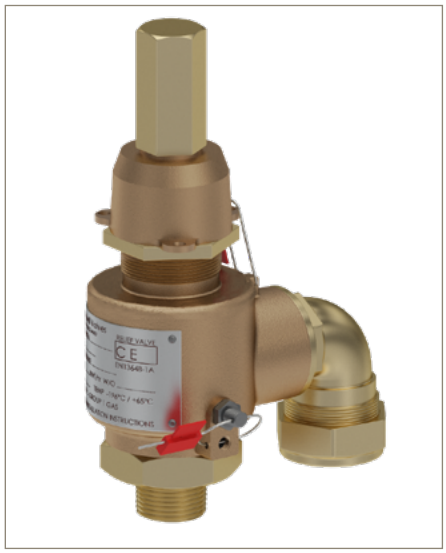

Parker Bestobell Cryogenic Safety Relief Valve in Bronze without Lever (BSP-TR Male Inlet x BSP-PL Female Outlet; Elbow)

Parker Bestobell Cryogenic Safety Relief Valve in Bronze without Lever (BSP-TR Male Inlet x BSP-PL Female Outlet; Inlet Adaptor, Elbow, Downpipe & Coupling)

Safety Relief Valves - Orifice Diameter 14.0 mm

CWF30/CWT30/CWS30 Series

CWF **30** **M** **U** **25**

Series	
Cryogenic Safety Relief Valves - Bronze (without lever)	CWF
Cryogenic Safety Relief Valves - Stainless Steel with Bronze Internals (without lever)	CWT
Cryogenic Safety Relief Valves – Full Stainless Steel (Without lever)	CWS

Valve Size	
DN 15	30

Inlet Connection	
3/4" BSP-PL Male	M
3/4" BSP-TR Male	P
3/4" NPT Male	R
1" BSP-PL Male	S
1" BSP-TR Male	T
1" NPT Male	U

Outlet Connection	
1-1/4" BSP-PL Female	T
1-1/4" BSP-TR Female	U
1-1/4" NPT Female	V

Set Pressure (in PSI)
Insert number from 25 to 580 (See table 1)

Notes:

1. Inlet and outlet connections can be of different types.
2. Offered with No Drain as standard.

Safety Relief Valves - Orifice Diameter 20.5 mm

CWF40/CWT40/CWS40 Series

CWF **40** **M** **U** **230**

Series	
Cryogenic Safety Relief Valves - Bronze (without lever)	CWF
Cryogenic Safety Relief Valves - Stainless Steel with Bronze Internals (without lever)	CWT
Cryogenic Safety Relief Valves – Full Stainless Steel (Without lever)	CWS

Valve Size	
DN 20	40

Inlet Connection	
1" BSP-TR Male	T
1" NPT Male	U
1-1/4" BSP-PL Male	V
1-1/4" BSP-TR Male	W
1-1/4" NPT Male	Y

Outlet Connection	
1-1/4" BSP-PL Female	T
1-1/4" BSP-TR Female	U
1-1/4" NPT Female	V
1-1/2" BSP-PL Female	W
1-1/2" NPT Female	Z

Set Pressure (in PSI)
Insert number from 25 to 435 (See table 1)

Notes:

1. Inlet and outlet connections can be of different types.
2. Offered with No Drain as standard.

Specifications

Threaded Ends

Valve Size		DN10	DN15	DN20
Orifice Diameter	mm	11.4	14.0	20.5
A	mm	48	64	64
B	mm	130	133	133
C	mm	60	73	73
Coefficient of discharge		0.37	0.53	0.45
Weight	kg	1.5	3.0	3.0

For flow data see page 65.

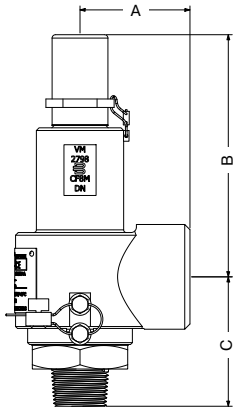

Thermal Relief Valves

Overview

Parker Bestobell cryogenic thermal relief valves are compact valves designed to prevent damage to piping and equipment caused by the expansion of liquefied gases. They relieve the overpressure in a fluid piping system caused by a temperature rise.

When liquefied gases are trapped between two closed valves (a situation known as a liquid lock), the reheating and consequent boiling can lead to a dangerous rise in pressure. The Parker Bestobell cryogenic thermal relief valves have been designed specifically for this application. The materials used prevent the valve from sticking in its seat even when left unused for long periods of time.

A set pressure, which characterizes each relief valve, defines when the valve starts to open to discharge excess pressure in the tank or piping. The Parker Bestobell cryogenic thermal relief valves are designed with an accuracy of +-3%, which means that the valves start to open within the limits of +-3% of the set pressure.

When the excess pressure is released, the valve returns to the closed position (reseats), thus preventing the waste of expensive cryogenic gases. Parker Bestobell cryogenic thermal relief valves' minimum pressure, when closed, is around 50% of the set pressure.

The Parker cryogenic thermal relief valves have various outlet connections to suit the customers' requirements. The Stainless Steel valves are also available with integral A-LOK® two ferrule connections. These allow very simple implementation of leak-free connections for process, power, and instrumentation applications. A-LOK® fittings use an advanced two ferrule system for reliability and easy assembly and disassembly. No special tools are required, and the design ensures that all make and remake motion is transmitted axially to the tubing. Its mechanical integrity is uncompromised with no radial movement to stress the tubing.

These cryogenic thermal relief valves should be fitted with the outlet vertically downwards to prevent moisture ingress.

Function:

- Prevent pipe damage

Applications:

- Transportation of Liquefied Gases
- Storages of Liquefied Gases
- Gas Processing

Parker Bestobell Cryogenic Thermal Relief Valve in Full Stainless Steel (12mm Two Ferrule A-LOK® Inlet and Outlet connections)

Parker Bestobell Cryogenic Thermal Relief Valve in Bronze (1/4" NPT Male Inlet and Protection Cap Outlet)

Valve size	DN6
Maximum Working Pressure (MWP)	40 bar (580 PSI)
Working temperature	-196°C to +65°C (-319°F to +149°F)
End connections	NPT, BSP, A-LOK® Fully Integrated Two Ferrule Connection
Body materials	Bronze, Stainless Steel
Suitable for media type	Group 1 gases Cleaned for oxygen service
Design and testing standards	ASTM B31.1, BS EN 1626, BS ISO 21011 Optional full material traceability backed by BS EN 10204 3.1/3.2 certification
Approvals	CRN, UKCA and PED approved
Marking	CE and UKCA marked

Features, Benefits and Values

Reference	Feature	Benefit	Value
A	Reseat design	Repeatable performance Prevents loss of fluid when system pressure returns to acceptable	Safety Performance Lower overall cost
B	A-LOK® end connections	Two ferrule system for leak-free operation No special tools required for installation	Safety Ease of operation Reliability
N/A	Unique serial number	Helps to identify each item Warranty control Enables location of the relevant certificate	Safety
N/A	Weather proof cap	Prevents dirt and moisture from entering the valve	Reliability

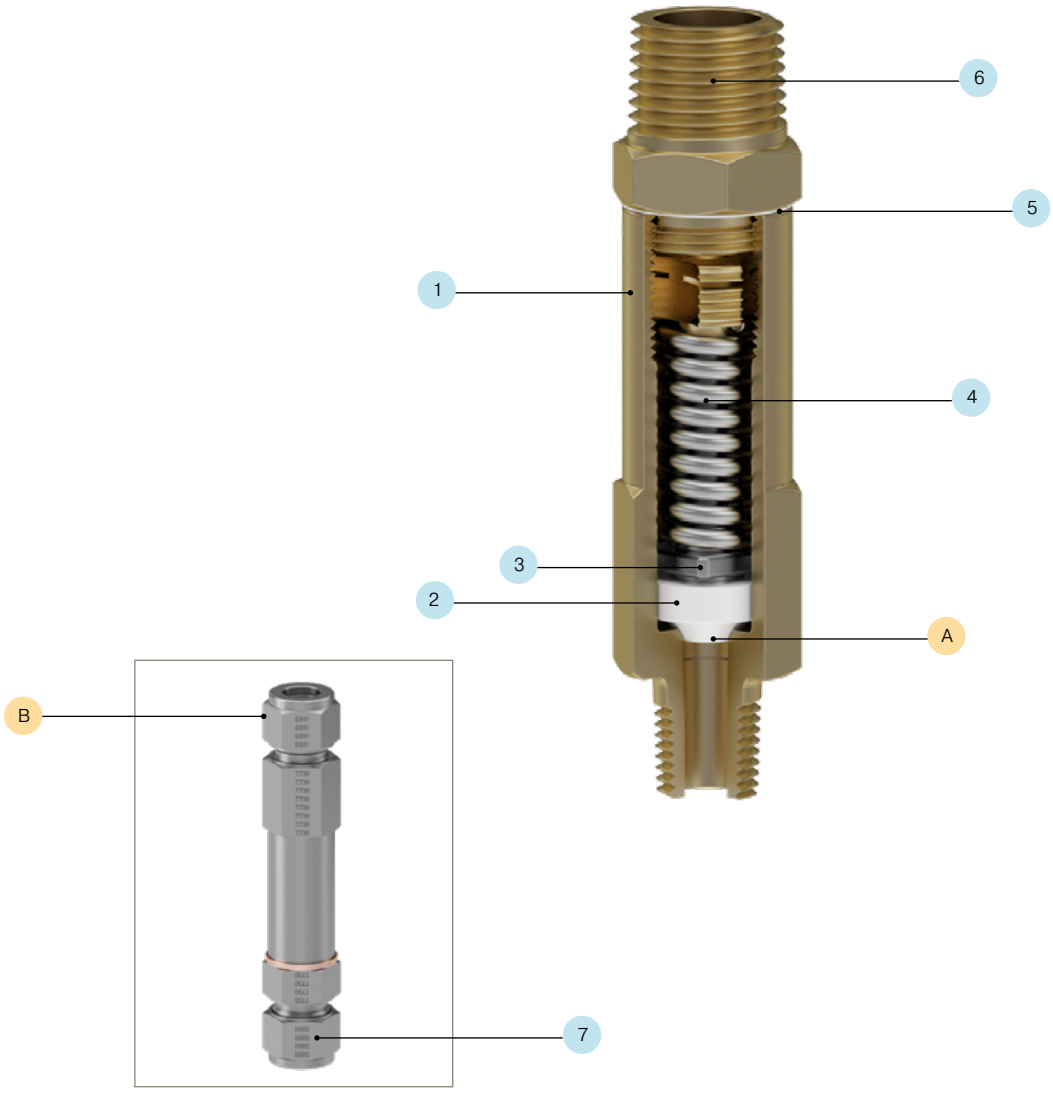

Thermal Relief Valves

Technical Information

Bill of Materials

	Description	Brass CVF Series	Full Stainless Steel CYF Series
1	Body	Naval Brass BS EN 12163 CW712R	Stainless Steel 316 BS EN 10088-3.1.4401
2	Seal	Hostaflon Electro Carbon Filled	
3	Stem	Stainless Steel 10088-3 1.4401	Stainless Steel 316 BS EN 10088-3.1.4401
4	Spring	Stainless Steel 302 S26 BS 2056	
5	Washer	Copper/Virgin PTFE	
6	Adjusting cap	Naval Brass BS EN 12163 CW712R	Stainless Steel 304 BS EN 10088-3.1.4301
7	A-LOK® connections	N/A	Stainless Steel 316/316L

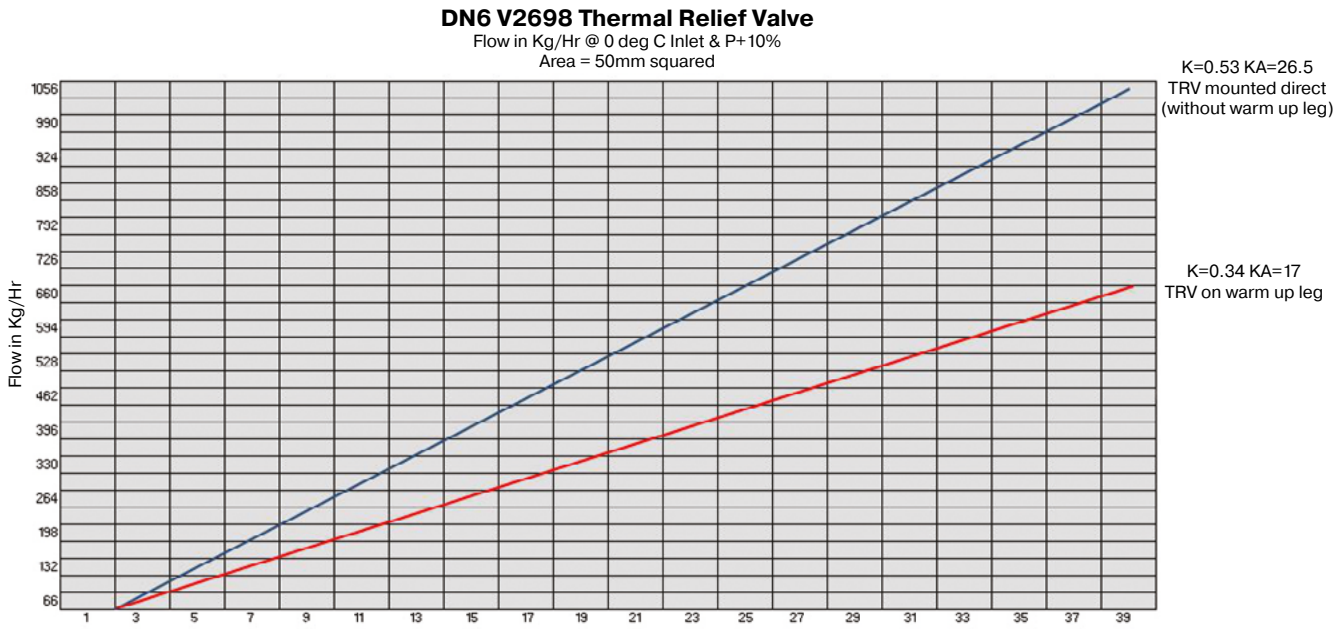

Ordering Information

Thermal Relief Valves - Bronze and Full Stainless Steel - Orifice Diameter 8.0 mm

CVF/CYF Series

CVF **10** **M** **M** **130**

Series	
Cryogenic Thermal Relief Valve - Bronze	CVF
Cryogenic Thermal Relief Valve - Full Stainless Steel	CYF

Valve Size	
DN 6	10

Inlet Connection	
1/4" BSP-TR Male	B
1/4" NPT Male	C
1/2" BSP-TR Male	K
1/2" NPT Male	L
12 mm A-LOK® [1]	M

Outlet Connection	
Open to Atmosphere	A
Protection Cap	D
Ring Pull	E
1/2" BSP-TR Male	K
1/2" NPT Male	L
12 mm A-LOK® [1]	M
1/2" BSP-TR Female	N
1/2" NPT Female	P

Set Pressure (in PSI)
Insert number from 25 to 580 (See table 1)

Table 1 - Set Pressure (in PSI)

25	41	57	73	92	116	140	164	188	212	245	285	325	365	405	445	485	525	565
27	43	59	75	95	119	143	167	191	215	250	290	330	370	410	450	490	530	570
29	45	61	77	98	122	146	170	194	218	255	295	335	375	415	455	495	535	575
31	47	63	79	101	125	149	173	197	220	260	300	340	380	420	460	500	540	580
33	49	65	80	104	128	152	176	200	225	265	305	345	385	425	465	505	545	
35	51	67	83	107	131	155	179	203	230	270	310	350	390	430	470	510	550	
37	53	69	86	110	134	158	182	206	235	275	315	355	395	435	475	515	555	
39	55	71	89	113	137	161	185	209	240	280	320	360	400	440	480	520	560	

Note:

1. A-LOK® connections are available only with Stainless Steel body material option (CYF) with set pressures from 200 to 580 PSI.

Specifications

Outlet Type		Open to Atmosphere	Ring Pull	Male Threaded	12 mm A-LOK®
A	mm	73.0	84.0	99.0	126.0
B (Inlet type)	inch/mm	1/4" Male BSPT/Male NPT or 1/2" Male BSPT/Male NPT			12 mm
Hexagon size	mm	22.2			
C	mm	8.0			
Coefficient of discharge		0.34			
Weight	kg	0.20	0.30	0.35	0.50

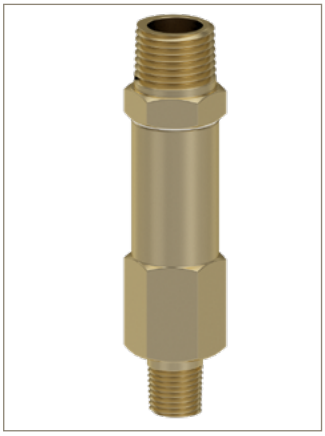

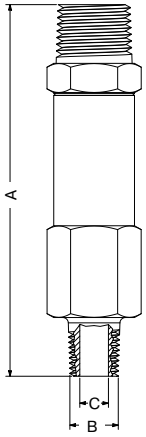

Proportional Relief Valves

Overview

Parker Cryogenic Proportional Relief Valves are designed to protect hydrogen and LNG storage tanks from overpressure, gradually reducing pressure and effectively managing boil-off gas. When the upstream pressure exceeds the closing force exerted by the valve's spring, the lower stem opens, permitting flow through the valve's outlet port, where it can be recaptured or released to the atmosphere. The flow rate increases proportionately to the upstream pressure increase.

Each relief valve is characterized by a set pressure, which marks the point at which the valve begins to open to discharge excess pressure in the tank. The Parker Cryogenic Proportional Relief Valve is designed with an accuracy of ±3%, meaning it starts to open within ±3% of the set pressure limits.

Upon the release of excess pressure, the valve returns to its closed position (reseats), preventing the wastage of expensive cryogenic gases. The valve will close at a pressure no lower than 85% of the set pressure.

The balanced bellows design of the proportional relief valve is a crucial feature that ensures consistent valve operation regardless of back pressure changes. This design employs a unique mechanism to balance the forces within the valve, maintaining a consistent output even under fluctuating pressure conditions.

A low-friction stem seal design reduces friction, enhancing the accuracy of cracking pressure and reseat pressure.

Each valve is individually factory-set to the required set pressure, clearly marked on the body, tested, and stamped with the date of manufacture and a unique serial number before dispatch. All valves are supplied protected with a tamper-proof seal.

Parker Cryogenic Proportional Relief Valves are available with fully integrated A-LOK® or CPI™ inlet and outlet connections for leak-free operation.

The valve must be installed vertically to ensure optimal performance.

Function:

- Prevents over-pressure

Applications:

- Liquefaction Plants
- Bulk Storage of liquified gases
- Transportation of liquified gases
- LNG/LH2 refueling stations

Valve size	DN 5
Maximum Working Pressure (MWP)	146-360 psi 1000-2503 kPa
Working temperature	-253°C to + 85°C
End connections	A-LOK®, CPI™
Body materials	316 Stainless Steel
Suitable for media type	Group 1 gases Cleaned for oxygen service
Design and testing standards	BS EN ISO 4126, BS EN 13648-1
Approvals	PED approved
Marking	CE marked

Features, Benefits and Values

Reference	Feature	Benefit	Value
1	Balanced bellows	Stable operation irrespective of back pressure changes	Safety Performance Reliability
2	Integral A-LOK®/ CPI™ compression tube ends	Leak-free operation No special tools required for installation	Safety Ease of operation Reliability
3	Anti-tamper operation	Protection from unauthorized tampering	Safety
4	Mounting holes	Convenient Installation Flexible Placement	Ease of operation Reliability
5	Tip low friction polymer (reseat design)	Repeatable performance Prevents sticking	Safety Performance Lower overall cost
6	Best in class Opening/Closing Accuracy Level	Product offers ±3% Opening and Closing accuracy levels for precise control of flow	Performance Safety

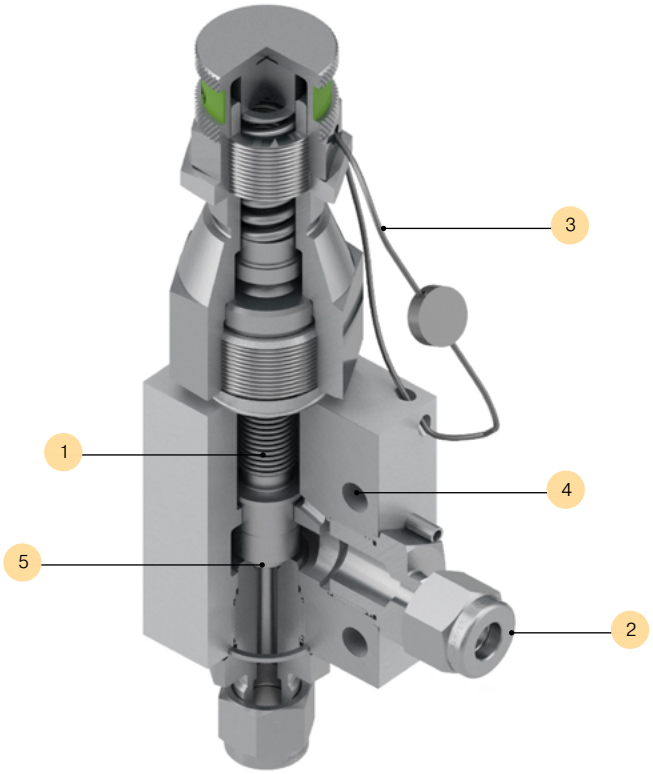

Proportional Relief Valves

Technical Information

Bill of Materials

	Description	Material
1	Body	Stainless Steel ASTM A479 Grade UNS S31600/S31603
2	Seat	Stainless Steel ASTM A479 Grade UNS S31600/S31603
3	Outlet Adaptor	Stainless Steel ASTM A479 Grade UNS S31600/S31603
4	Stem Tip	Stainless Steel ASTM A479 Grade UNS S31600/S31603
5	Stem	Stainless Steel ASTM A479 Grade UNS S31600/S31603
6	Bellows	Stainless Steel BS EN 10088-3 1.4404
7	Bonnet	Stainless Steel ASTM A479 Grade UNS S31600/S31603
8	Joint Seal	Stainless Steel ASTM A479 UNS S31600
9	Weld Flange	Stainless Steel ASTM A479 Grade UNS S31600/S31603
10	Locking Wire & Puck	Galvanised Steel Wire & Lead
11	Shaft Cap	Stainless Steel ASTM A479 Grade UNS S31600/S31603
12	Spring	Stainless Steel BS EN 10270-3 1.4401
13	Panel Nut	Stainless Steel
14	ID Sticker	Vinyl
15	Swash Plate	Stainless Steel ASTM A479 Grade UNS S31600/S31603
16	Adjusting Cap	Stainless Steel ASTM A479 Grade UNS S31600/S31603
17	Nut and Ferrule Kit	Stainless Steel ASTM A479 Grade UNS S31600/S31603

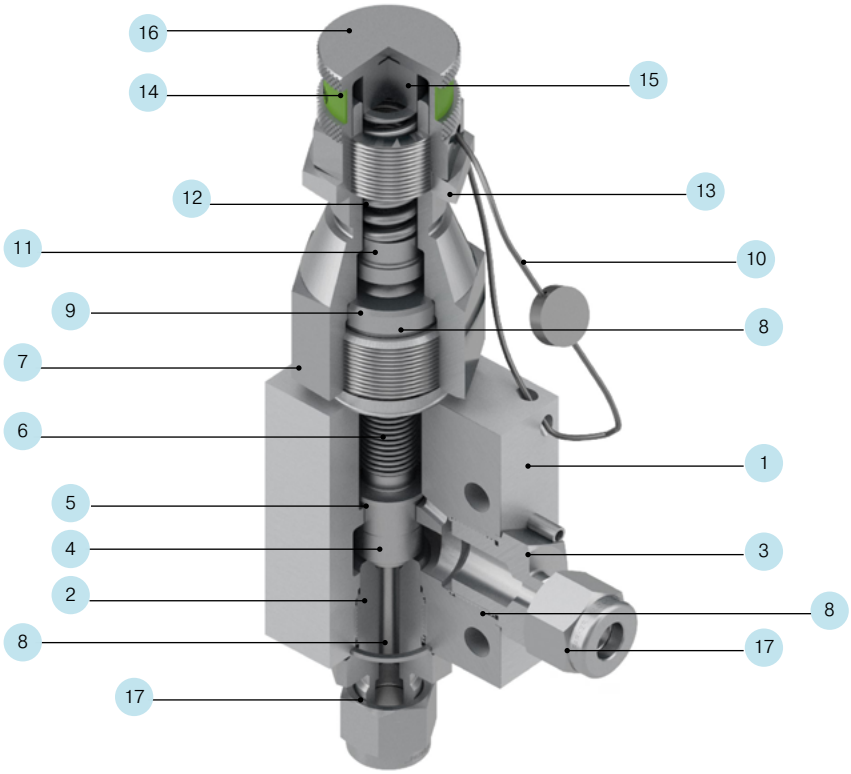

Ordering Information

Proportional Relief Valves

CPRV Series

CPRV	S	4A	4A	145
Valve Series	Body Material	Inlet Port	Outlet Port	Set pressure in psi

Valve Series	
Cryogenic Proportional Relief Valves	CPRV

Body Material	
Full stainless steel 316	S

Inlet Port	
1/4-18 NPT (Male)	4M
1/4-18 NPT (Female)	4F
1/4" O.D. A-LOK®	4A
6mm O.D. A-LOK®	M6A
1/4" O.D. CPI™	4Z
6mm O.D. CPI™	M6Z

Outlet Port	
1/4-18 NPT (Male)	4M
1/4-18 NPT (Female)	4F
1/4" O.D. A-LOK®	4A
6mm O.D. A-LOK®	M6A
1/4" O.D. CPI™	4Z
6mm O.D. CPI™	M6Z

Set pressure in psi
Denote set pressure in PSI

Specifications

Set Pressure	PSI (BAR)	145 (10.0)	218 (15.0)	290 (20.0)	363 (25.0)
Orifice Diameter	mm	4.775	4.775	4.775	4.775
A	mm	97.4	96.3	95.1	94
B	mm	32.7	32.7	32.7	32.7
C	mm	30.7	30.7	30.7	30.7
Weight	kg	0.7	0.7	0.7	0.7
Cracking Pressure	bar	10	15	20	25
Overpressure	bar	11	16.5	22	27.5
Discharge Coefficient	kdr	0.091	0.108	0.118	0.124

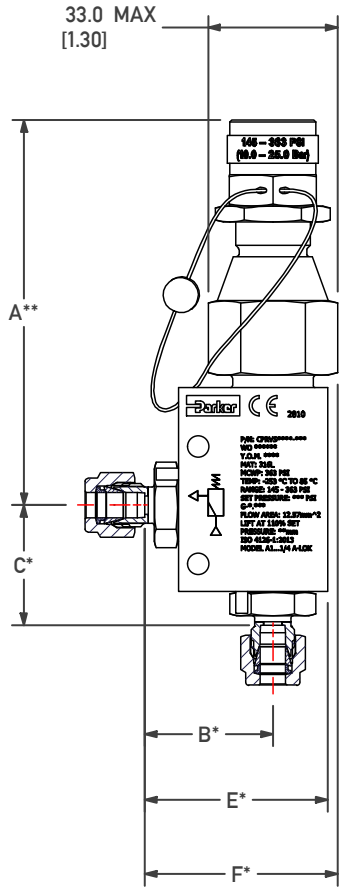

*Dimensions A, B and C are to tube abutment faces, and are not overall product envelope dimensions. For overall product envelope dimensions add 15.3mm [0.60"] per end connection.

**Dimensions marked thus are for 10.0 bar set pressure as set pressure increases dimensions will decrease

Pressure Regulators

Overview

The Parker Bestobell cryogenic pressure regulator (also known as Cryoreg) regulates the pressure of storage vessels, including static and transportable tanks.

The cryoreg valve combines the following functions:

- Pressure build-up regulator
- Economizer valve
- Thermal relief valve on two ports

To prevent contaminants from entering the regulator, strainers with monel mesh are installed on the inlet and outlet of the regulator. A check valve is fitted on the outlet of the economizer ball to prevent the backflow of the media.

The Parker Bestobell pressure regulator - Cryoreg, is available with a choice of springs to give optimum control in all applications. Set pressure tolerance will normally be held on gas ± 3% and liquid side ± 5%.

Install the Cryoreg with the pressure setting screw downwards; this prevents ice formation inside the cover, which would impede the correct operation of the valve. To set the valve at the correct pressure (it is usually supplied with the pressure setting screw at mid-spring range unless otherwise requested) slacken off the setting screw locknut. Screw the pressure setting screw into the valve until the correct working pressure is obtained.

A name plate will be fitted on the body of the valve.

Valve size	DN15
Maximum Working Pressure (MWP)	25 bar (360 PSI) dependent on end connections
Working temperature	-196˚C to +65˚C (-319˚F to +149˚F)
End connections	BSP, NPT, Butt Weld
Body materials	Bronze
Suitable for media type	Group 1 gases Cleaned for oxygen service
Design and testing standards	ASTM B31.1, BS EN 1626, BS ISO 21011 Optional full material traceability backed by BS EN 10204 3.1/3.2 certification
Approvals	CRN, UKCA and PED approved
Marking	CE and UKCA marked

Function:

- Vessel pressure regulation

Applications:

- Transportation of Liquefied Gases
- Storages of Liquefied Gases
- Gas Processing

Parker Bestobell Cryogenic Pressure Regulator (Cryoreg) in Bronze (Inlet and outlet Ports1-1/4" BSP-PL c/w 60˚ Cone; Economizer Port: 3/4" BSP-PL c/w 60˚ Cone)

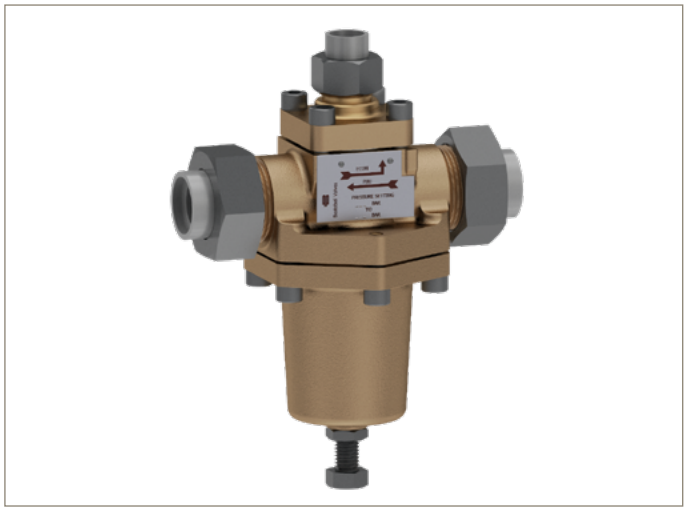

Parker Bestobell Cryogenic Pressure Regulator (Cryoreg) in Bronze (1" (Inlet and outlet Ports: 1" NB x Butt Weld Schedule 10; Economizer Port: 1/2" NB x Butt Weld Schedule 10)

Valve Operation

This cryogenic pressure regulator is usually installed after the pressure build-up (PBU) coil of the storage unit and therefore controls the gaseous flow during the pressure build-up phase. There should be a minimum of 200mm head (A) between the highest liquid level and the point at which the economiser outlet joins the customer supply line.

The valve operation is such that it maintains a system pressure on a storage tank during the transfer of gas from the trailer to a storage unit or vice versa. Pressure must be maintained to allow flow at desired rates during transfer. If the regulator is fitted before the PBU coil, the operation is identical, except that liquid will be passed during the pressure build-up phase.

The following explanation of the cryoreg assumes that it is fitted after the pressure build-up coil of the storage unit. It will therefore control a gaseous flow during the pressure build-up phase of its operation.

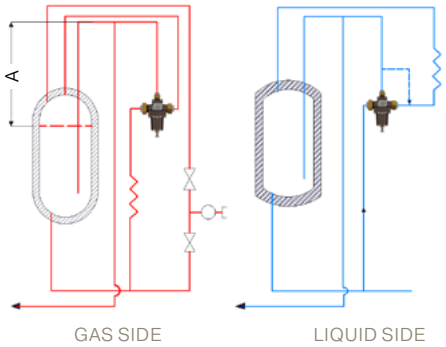

Typical Cryoreg installation

Pressure build-up regulator function:

As liquid or gas is drawn down from the tank, the pressure inside the tank will fall. To compensate for this, the cryoreg will open to allow liquid to pass through the pressure build-up coil of the storage tank. Sufficient gas will thus be generated to bring the tank back to its normal working pressure.

When media is drawn down, the outlet pressure drops slightly, allowing the pressure setting spring to extend. A sensitive diaphragm assembly, connected to the spring, will lift the multi-function disc away from the main seat. This allows flow through the body, from port A to port B, via the pressure build-up seat on the multi-function disc to the downstream system.
As soon as the pressure in the tank has recovered, the diaphragm assembly is pushed back down again, closing off the flow path.

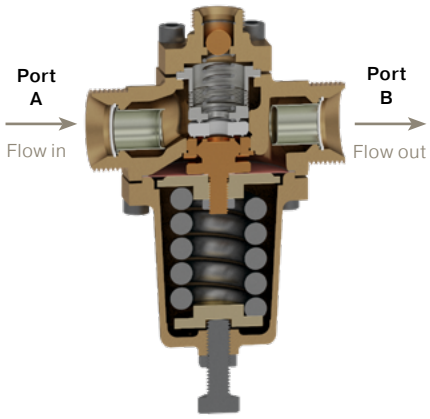

Pressure build-up regulator function

Economizer valve function:

When heat leaks into a cryogenic storage tank, the liquid will revert to its gas phase leading to a pressure rise in the tank. If left unchecked, the process may continue until the relief valve lifts, wastefully venting gas into the atmosphere.

The economizer valve diverts excess gas into the customer's supply line. Diverting the flow in this manner will prevent the relief valve from lifting, avoiding waste, and reducing the cost of storing the liquefied gas. To accomplish this, inside the Cryoreg is a flow path that allows gas to pass from port B up to the economizer port C. This occurs when the tank pressure exceeds the valve set pressure by more than 0.54 barg. A diaphragm assembly sensitive to tank pressure will be moved down having overcome the force of the pressure setting spring; it opens a flow path from port B up through the center of the valve to exit via the economizer port C. This mechanism is also used to provide thermal relief into the economizer port C from outlet B.

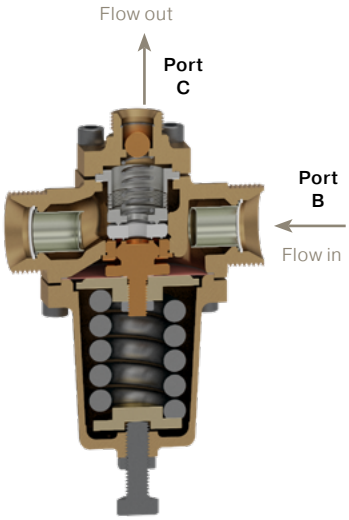

Economizer valve function

Pressure Regulators

Overview

Thermal relief valve function:

When liquefied gases are trapped between two closed valves, supplying the pressure build-up coil and the cryoreg (a situation known as a liquid lock), the reheating and consequent boiling can lead to a dangerous rise in pressure. A thermal relief valve would usually be required to protect the coil-associated pipework from the high pressures generated by warming the trapped liquid. This function, however, is built into the Cryoreg, which will automatically vent the gas into either the economizer line (port C), if the valve operates in pressure build-up function, or into the gas supply line to the tank (port A) when the regulator is in the economizer function mode. As described above, this gives protection under all foreseeable circumstances.

This function is accomplished by the differential pressure across the bellows assembly, forcing it to compress, leaving the multi-function disc in place. This allows a flow path from port A, up through the center of the bellows to exit from the economizer port C.
Note that if an isolating valve is fitted in the economizer line, it will be necessary to fit a separate thermal relief valve between the economizer port C and the isolation valve. This is not necessary if a Parker Bestobell check valve is installed.

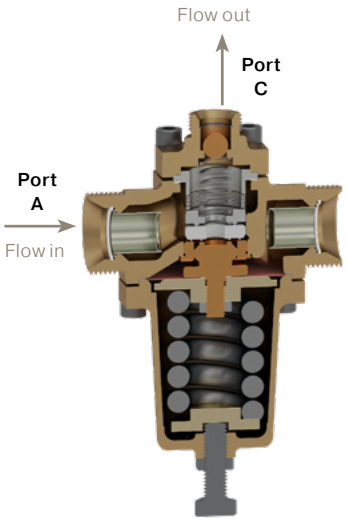

Thermal relief valve function when operating as a pressure build-up valve

Features, Benefits and Values

Feature	Benefit	Value
Combined pressure build-up regulator and economizer	Simpler pipework Fewer joints Reduced leakage Added system protection	Safety Performance Reliability Lower overall cost
High flow characteristic	Precision pressure control Flow capability	Performance
Single adjustment for PBU and economizer functions	Simpler tank setting	Performance
High accuracy/low deadband	Reduced boil-off in pipelines	Safety Performance Reliability

Technical Information

Bill of Materials

	Description	Bronze CK Series
1	Body	Gunmetal BS EN1982 CC491K
2	Spring Housing	Gunmetal BS EN1982 CC491K
3	Seat	Phosphor Bronze BS EN 12163 CW451K
4	Disc Assembly	Beryllium Copper/Phosphor Bronze
5	Spring	Stainless Steel Series 300
6	Seal	Virgin PTFE
7	Bellows Assembly	Stainless Steel Series 300
8	Strainer	Monel
9	Fasteners	Stainless Steel BS6105 A2/A4 Gr.70
10	Ball	Phosphor Bronze BS EN 12163 CW451K

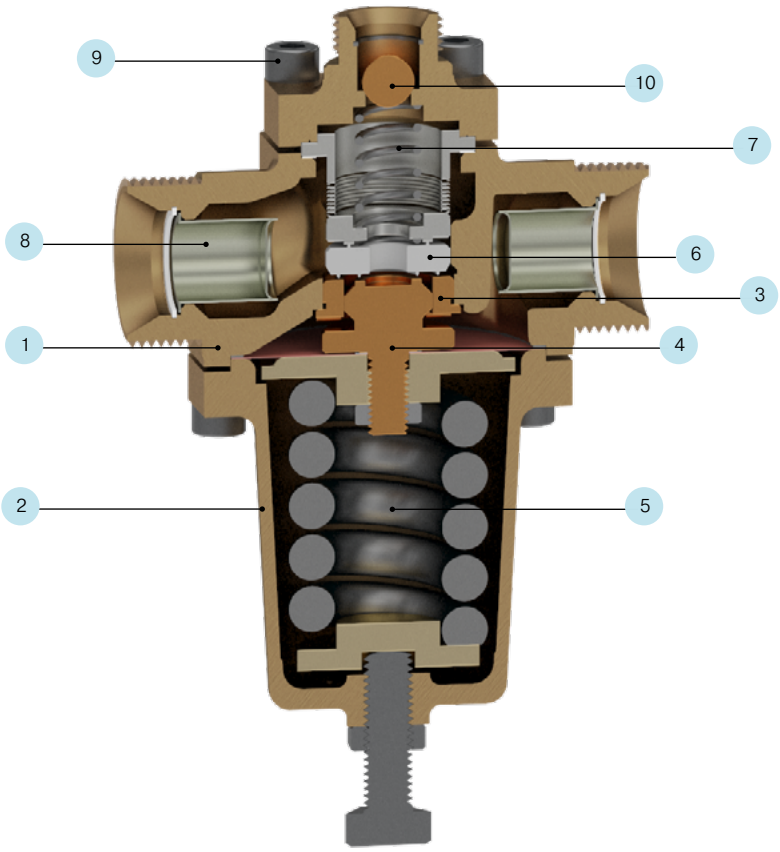

Pressure Regulators

Technical Information

Maximum Flow through regulator to give pressure build kg/hr

Bar g		2	4	6	8	10	12	14	16	18	20	25	30	35	40
PSI g		29	58	87	116	145	174	203	232	261	290	362.5	435	507.5	580
LIN	kg/hr	513	499	477	460	445	431	418	407	393	378	347	310	-	-
LOX	kg/hr	728	711	686	667	651	636	622	609	595	581	551	524	495	467
LAR	kg/hr	888	888	837	813	792	774	757	741	726	704	669	634	597	563
CO2	kg/hr	-	-	758	746	727	715	703	692	681	672	648	627	607	586

Maximum gas withdrawal from tank M3/hr

Bar g	PSI g	LIN M3/hr	LOX M3/hr	LAR M3/hr	CO2 M3/hr
2	29	25313	48940	43151	-
4	58	14544	28991	25388	-
6	87	9434	18940	16929	24155
8	116	6708	13798	12359	17835
10	145	5014	10680	9494	13646
12	174	3861	8533	7549	11184
14	203	3040	6998	6141	9379
16	232	2436	5805	5080	8006
18	261	1938	4867	4267	6786
20	290	1537	3991	3552	5968
25	362.5	877	2664	2409	4285
30	435	507	1841	1669	3281
35	507.5	-	1262	1131	2522
40	580	-	853	750	1901

Liquid Density kg/M3				Vapour Density kg/M3			
LIN	LOX	LAR	CO2	LIN	LOX	LAR	CO2
780	1106	1350	-	12.45	11.4	15.4	-
758	1080	1319	-	20.24	18.2	24.8	-
725	1043	1272	1152	28.19	25.8	34.3	18
699	1014	1235	1134	36.35	33.2	43.9	23.5
676	989	1204	1105	44.8	40.4	53.8	29
655	966	1176	1086	53.7	47.9	63.9	34
636	946	1150	1068	63.1	55.4	74.3	39
618	925	1126	1051	72.8	63.2	85.1	44
597	904	1103	1035	83.3	71.2	96	50
574	883	1070	1021	94.3	81.6	107	55
527	838	1017	985	126.6	106.0	137	70
471	796	963	953	154.6	132.2	169	84
-	752	907	922		162.0	207	100
-	710	855	890		196.8	253	120

$Q = kw \sqrt{\Delta p} / p$ where
Q = Actual flow in m^3/h
Δp = Pressure drop in bar
p = Liquid density in kg/m^3

Cryoreg Flow Data

Cryoreg on liquid side of vapouriser.
Flow rates given are in kg/hr with 1 meter liquid head in vessel.
For change in liquid head multiply flow by square root liquid head.

Ordering Information

Pressure Regulators - Bronze
CK Series

CK	DN15	M	M	M	1

Series	
Cryogenic Pressure Regulator - Bronze	CK

Valve Size	
15 mm	DN15

Inlet Connection Port A	
1-1/4" BSP-PL c/w 60° Cone	T
1/2" NPT Female	J
1" NPT Female	R
1/2" NB x Butt Weld Schedule 10	M
1" NB x Butt Weld Schedule 10	P

Outlet Connection Port B	
1-1/4" BSP-PL c/w 60° Cone	T
1/2" NPT Female	J
1" NPT Female	R
1/2" NB x Butt Weld Schedule 10	M
1" NB x Butt Weld Schedule 10	P

Economizer Port Port C	
3/4" BSP-PL c/w 60° Cone	L
3/8" NPT Female	H
1/2" NPT Female	J
3/4" NPT Female	K
1/2" NB x Butt Weld Schedule 10	M

Pressure Range	
22-58 PSI (1.5-4.0 bar)	1
59 - 145 PSI (4.1 - 10.0 bar)	2
146-363 PSI (10.1 - 25.0 bar)	3

Note:
Inlet and outlet connections can be of different types.

Specifications

Dimension		
A	mm	134.0
B	mm	57.5
C	mm	126.0
Weight	kg	3.5

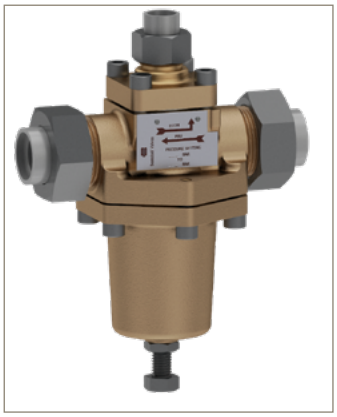

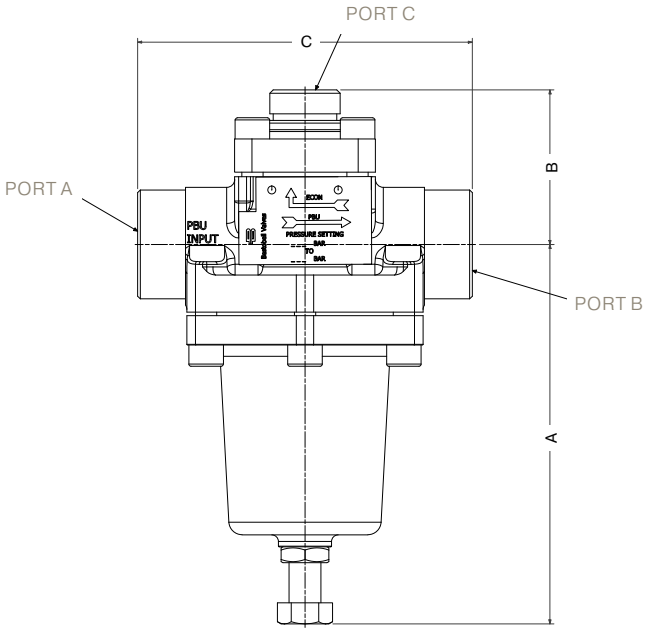

Spares Kits
Globe Valves

Manual Globe Valves - Bronze
CNB Series

Valve Size		DN15	DN25	DN40	DN50
Gasket & Packing Kit		CNBRDN15	CNBRDN25	CNBRDN40	CNBRDN50
Bolted Bonnet Assembly	Non-extended	CNBB1DN15	CNBB1DN25	CNBB1DN40	CNBB1DN50
	230mm Extension	CNBB2DN15	CNBB2DN25	CNBB2DN40	CNBB2DN50
	300mm Extension	CNBB3DN15	CNBB3DN25	CNBB3DN40	CNBB3DN50
Handwheel Kit *		KHDN15W	KHDN25W	KHDN40W	KHDN50W

* White color as standard

Manual Globe Valves - Full Stainless Steel
CNS Series

Valve Size		DN15	DN25	DN40	DN50
Gasket & Packing Kit		CNSRDN15	CNSRDN25	CNSRDN40	CNSRDN50
Bolted Bonnet Assembly	Non-extended	CNSB1DN15	CNSB1DN25	CNSB1DN40	CNSB1DN50
	230mm Extension	CNSB2DN15	CNSB2DN25	CNSB2DN40	CNSB2DN50
	300mm Extension	CNSB3DN15	CNSB3DN25	CNSB3DN40	CNSB3DN50
Handwheel Kit *		KHDN15W	KHDN25W	KHDN40W	KHDN50W

* White color as standard

Manual Globe Valves - Stainless Steel with Bronze Internals
CNT Series

Valve Size		DN15	DN25	DN40	DN50	DN65	DN80	DN100
Gasket & Packing Kit		CNBRDN15	CNBRDN25	CNBRDN40	CNBRDN50	CNBRDN65	CNBRDN80	CNBRDN100
Bolted Bonnet Assembly	Non-extended	CNBB1DN15	CNBB1DN25	CNBB1DN40	CNBB1DN50	N/A	N/A	N/A
	230mm Extension	CNBB2DN15	CNBB2DN25	CNBB2DN40	CNBB2DN50	N/A	N/A	N/A
	300mm Extension	CNBB3DN15	CNBB3DN25	CNBB3DN40	CNBB3DN50	CNBB3DN65	CNBB3DN80	N/A
	400mm Extension	N/A	N/A	N/A	N/A	N/A	N/A	CNBB4DN100
Handwheel Kit *		KHDN15W	KHDN25W	KHDN40W	KHDN50W	KHDN65W	KHDN80W	KHDN100W

* White color as standard

Actuated Globe Valves - Stainless Steel with Bronze Internals
CNT*TA Series

Valve Size		DN25	DN40	DN65
Gasket & Packing Kit		CNTRDN25	CNTRDN40	CNTRDN65
Bolted Bonnet Assembly	300mm Extension	CNTB3DN25	CNTB3DN40	CNTB3DN65
Spare Tyre		CNTTDN25	CNTTDN40	CNTTDN65
Tyre Seal Repair		CNTTSDN25	CNTTSDN40	CNTTSDN65
Handwheel Override Kit		KHDON25W	KHODN40W	KHODN65W

Gasket & Packing Kit	
Content	**Quantity**
Wiper Seal	1
Chevron Top	2
‘O’ Seal	1
Chevron Bottom	1
Gasket	1
Anti-Friction Disc	1
Valve Seal Flat	1

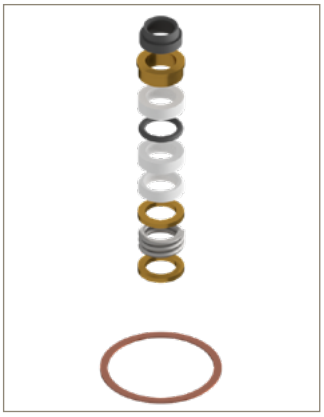

Gasket & Packing Kit for Parker Bestobell Cryogenic Manual Globe Valves

Handwheel Kit	
Content	**Quantity**
Handwheel	1
Locknut	1

Handwheel Kit for Parker Bestobell Cryogenic Manual Globe Valves DN100

Handwheel Kit for Parker Bestobell Cryogenic Manual Globe Valves DN15-DN80

Bolted Bonnet Assembly	
Content	**Quantity**
Cover	1
Stem	1
Bush	1
Gasket & Packing Kit	1
Nuts	2
Washer	1
Circlip	2
Spring	1
Gland Follower	1
Ball	1

Bolted Bonnet Kit for Parker Bestobell Cryogenic Manual Globe Valves in Bronze and Stainless Steel with Bronze Internals

Bolted Bonnet Kit for Parker Bestobell Cryogenic Manual Globe Valves in Full Stainless Steel

Spare Tyre	
Content	**Quantity**
Tyre	1

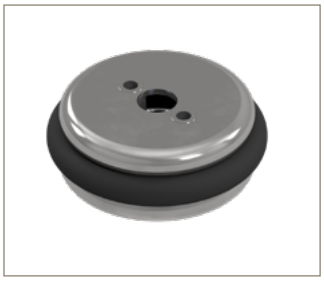

Spare Tyre for Parker Bestobell Cryogenic Tyre Actuated Globe Valves

Tyre Seal Kit	
Content	**Quantity**
Tyre	1
Seal	8

Tyre Seal Kit for Parker Bestobell Cryogenic Tyre Actuated Globe Valves

Handwheel Override Kit	
Content	**Quantity**
Handwheel	1
Locknut	2

Handwheel Override Kit for Parker Bestobell Cryogenic Tyre Actuated Globe Valves

Spares Kits

Gate Valves

Manual Gate Valves - Full Stainless Steel

CMC Series

Valve Size	DN40	DN50	DN65	DN80
Gasket & Packing Kit	CMCRDN40	CMCRDN50	CMCRDN65	CMCRDN80
Disc Assembly	CMCDDN40	CMCDDN50	CMCDDN65	CMCDDN80
Seat Assembly	N/A	CMCSDN50	CMCSDN65	CMCSDN80
Handwheel Kit *	KHDN40W	KHDN50B	KHDN65B	KHDN80B

* White color as standard

Gasket & Packing Kit	
Content	**Quantity**
Packing Gland Set	1
Wiper Seal	1
Gasket	1

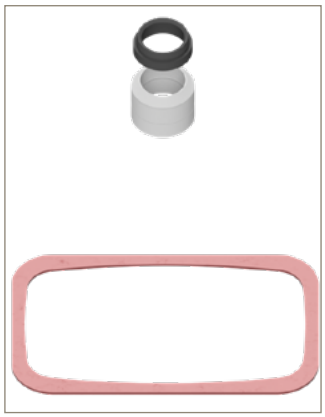

Gasket & Packing Kit for Parker Bestobell Cryogenic Manual Gate Valves

Disc Assembly	
Content	**Quantity**
Disc	1
Seal	1
Pin Spring	1
Nut	1

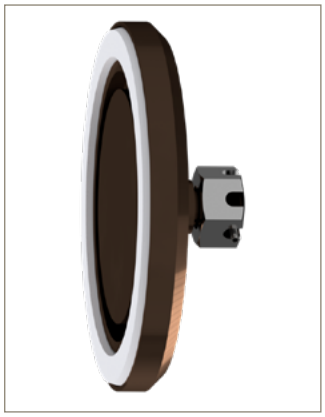

Disc Assembly for Parker Bestobell Cryogenic Manual Gate Valves

Seat Assembly	
Content	**Quantity**
Seat	1
Seal	1
Circlip	1

Seat Assembly for Parker Bestobell Cryogenic Manual Gate Valves

Handwheel Kit	
Content	**Quantity**
Handwheel	1
Locknut	1

Handwheel Kit for Parker Bestobell Cryogenic Manual Gate Valves

Tyre Actuated Gate Valves - Full Stainless Steel
CMD Series

Valve Size	DN40	DN50	DN65	DN80
Gaskets & Packing Kit	CMDRDN40	CMDRDN50		
Disc Assembly	CMDDDN40	CMDDDN50	CMDDDN65	CMDDDN80
Seat Assembly	N/A	CMDSDN50	CMDSDN65	CMDSDN80
Spare Tyre	CMDTDN40	CMDTDN50		
Tyre Seal Kit	CMDTSDN40	CMDTSDN50		
Handwheel Override Kit	KHODN40W	KHODN50W	KHODN65W	KHODN80W

Gasket & Packing Kit	
Content	**Quantity**
Chevron Top	2
Chevron BTM	1
Wiper Seal	1
'O' Seal	6
Spring	1
Gland Follower	1
Washer	2
Gasket	2

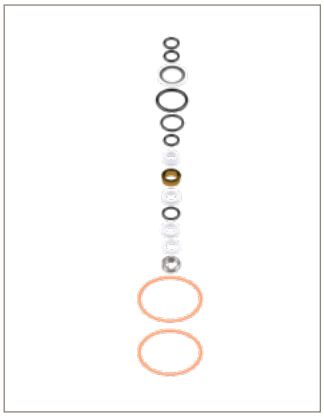

Gasket & Packing Kit for Parker Bestobell Cryogenic Tyre Actuated Gate Valves

Disc Assembly	
Content	**Quantity**
Disc	1
Seal	1
Pin Spring	1
Nut	1

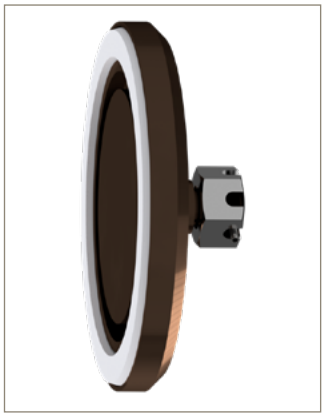

Disc Assembly for Parker Bestobell Cryogenic Tyre Actuated Gate Valves

Seat Assembly	
Content	**Quantity**
Seat	1
Seal	1
Circlip	1

Seat Assembly for Parker Bestobell Cryogenic Tyre Actuated Gate Valves

Spare Tyre	
Content	**Quantity**
Tyre	1

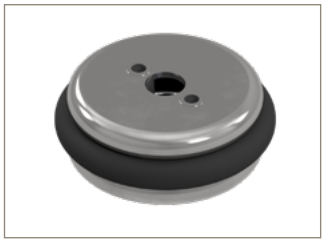

Spare Tyre for Parker Bestobell Cryogenic Tyre Actuated Gate Valves

Tyre Seal Kit	
Content	**Quantity**
Tyre	1
Seal	8

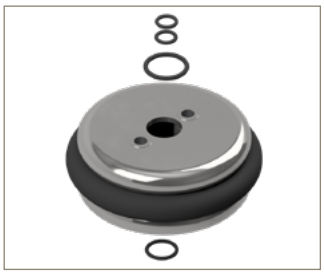

Tyre Seal Kit for Parker Bestobell Cryogenic Tyre Actuated Gate Valves

Handwheel Override Kit	
Content	**Quantity**
Handwheel	1
Locknut	2

Handwheel Override Kit for Parker Bestobell Cryogenic Tyre Actuated Gate Valves

Spares Kits

Fill Manifold Assemblies

Bronze

CTB Series

Valve Size		DN15 (Drain Valve)	DN40
Gasket & Packing Kit		CNBRDN15	CNBRDN40
Bonnet Assembly	Standard Extension	CNBB3DN15	N/A
	230mm Extension	N/A	CNBB2DN40
Handwheel Kit		KHDN15W	KHDN40W
Back Flange Kit		N/A	CTBKFDN40

Gasket & Packing Kit	
Content	**Quantity**
Wiper Seal	1
Chevron Top	2
'O' Seal	1
Chevron Bottom	1
Gasket	1
Anti-Friction Disc	1
Valve Seal Flat	1

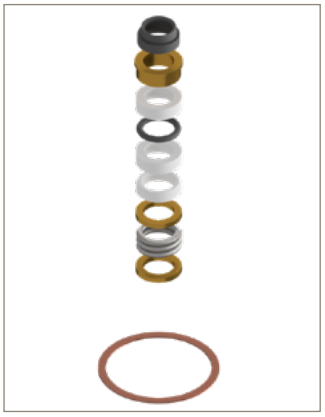

Gasket & Packing Kit for Parker Bestobell Cryogenic Fill Manifold Assemblies

Bolted Bonnet Assembly	
Content	**Quantity**
Cover	1
Stem	1
Bush	1
Gasket & Packing Kit	1
Nuts	2
Washer	1
Circlip	2
Spring	1
Gland Follower	1
Ball	1

Bolted Bonnet Assembly for Parker Bestobell Cryogenic Fill Manifold Assemblies

Handwheel Kit	
Content	**Quantity**
Handwheel	1
Locknut	1

Handwheel Kit for Parker Bestobell Cryogenic Fill Manifold Assemblies

Back Flange Kit (Valve DN40)	
Content	**Quantity**
Gasket	1
Seal	1

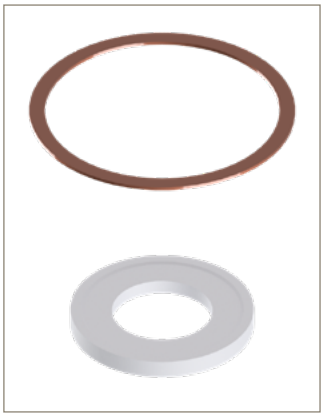

Back Flange Kit for Parker Bestobell Cryogenic Fill Manifold Assemblies DN40

Ball Valves

Manual Ball Valves with Reduced Bore - Bronze and Full Stainless Steel
CZFR*B and CZFR*S Series

Valve Size	DN15	DN25	DN40	DN50
Gasket & Packing Kit	CZFRRDN15	CZFRRDN25	CZFRRDN40	CZFRRDN50
Centre Section - Bronze	CZFRBCDN15	CZFRBCDN25	CZFRBCDN40	CZFRBCDN50
Centre Section - Stainless Steel	CZFRSCDN15	CZFRSCDN25	CZFRSCDN40	CZFRSCDN50

Manual Ball Valves with Full Bore - Bronze and Full Stainless Steel
CZFF*B and CZFF*S Series

Valve Size	DN15	DN25	DN40
Gasket & Packing Kit	CZFFRDN15	CZFFRDN25	CZFFRDN40
Centre Section - Bronze	CZFFBCDN15	CZFFBCDN25	CZFFBCDN40
Centre Section - Stainless steel	CZFFSCDN15	CZFFSCDN25	CZFFSCDN40

Gasket & Packing Kit	
Content	**Quantity**
Chevron Top	2
Chevron BTM	1
Wiper Seal	1
'O' Seal	1
Spring	1
Seal ball valve	2
Washer	2
Gasket	2
Bush	1
Protection cap	1

Gasket & Packing Kit for Parker Bestobell Cryogenic Ball Valves

Centre Section	
Content	**Quantity**
Gasket and packing kit	1
Body	1
Tube	1
Housing	1
Ball	1
Gland follower	1
Bush gland	1
Stem	1
Handlever	1
Stop pin	1
Nut	1
Nut lock	1

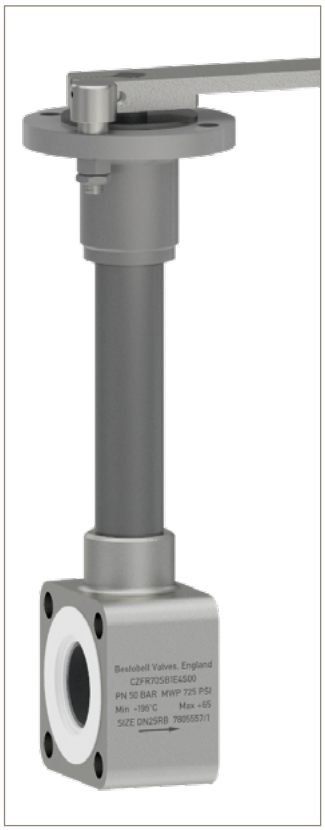

Centre-Section for Parker Bestobell Cryogenic Ball Valves

Spares Kits

Check Valves

Manual Lift Check Valves - Bronze

CGB Series

Valve Size	DN15	DN25	DN40	DN50
Gasket & Seal Kit	CGBRDN15	CGBRDN25	CGBRDN40	CGBRDN50

Manual Lift Check Valves - Stainless Steel with Bronze Internals

CGT Series

Valve Size	DN15	DN25	DN40	DN50	DN65	DN80	DN100
Gasket & Seal Kit	CGTRDN15	CGTRDN25	CGTRDN40	CGTRDN50	CGTRDN65	CGTRDN80	CGTRDN100

Manual Swing Check Valves - Full Stainless Steel

CHC Series

Valve Size	DN25	DN40	DN50	DN80
Gasket & Seal Kit	CHCRDN25	CHCRDN40	CHCRDN50	CHCRDN80
Gasket & Disc/Seal Kit	CHCDDN25	CHCDDN40	CHCDDN50	CHCDDN80

Gasket & Seal Kit	
Content	Quantity
Gasket	1
Seal	1

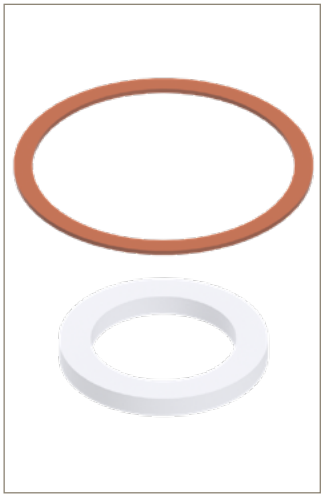

Gasket & Seal Kit for Parker Bestobell Cryogenic Manual Lift Check Valves in Bronze and Stainless Steel with Bronze Internals

Gasket & Disc/Seal Kit	
Content	Quantity
Gasket	1
Pin split	1
Disc	1
Seal	1

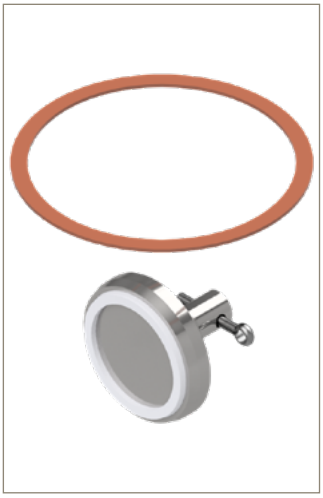

Gasket & Disc/Seal Kit for Parker Bestobell Cryogenic Manual Swing Check Valves in Full Stainless Steel

Strainers

Strainers - Bronze

CSB Series

Valve Size		DN15	DN25	DN40	DN50
Gasket & PTFE Slipper		CSBRDN15	CSBRDN25	CSBRDN40	CSBRDN50
Filter	Copper/Monel (100 mesh)	CSBFCDN15	CSBFCDN25	CSBFCDN40	CSBFCDN50
	Stainless Steel (100 mesh)	CSBFSDN15	CSBFSDN25	CSBFSDN40	CSBFSDN50

Strainers - Stainless Steel

CSS Series

Valve Size		DN15	DN25	DN40	DN50	DN65	DN80	DN100
Gasket & PTFE Slipper		CSSRDN15	CSSRDN25	CSSRDN40	CSSRDN50	CSSRDN65	CSSRDN80	CSSRDN100
Filter	Copper/Monel (100 mesh)	CSSFCDN15	CSSFCDN25	CSSFCDN40	CSSFCDN50	CSSFCDN65	CSSFCDN80	CSSFCDN100
	Stainless Steel (100 mesh)	CSSFSDN15	CSSFSDN25	CSSFSDN40	CSSFSDN50	CSSFSDN65	CSSFSDN80	CSSFSDN100

Gasket & PTFE Slipper	
Content	Quantity
Gasket	1
PTFE slipper	1

Gasket & PTFE Slipper for Parker Bestobell Cryogenic Strainers

Filter	
Content	Quantity
Filter	1

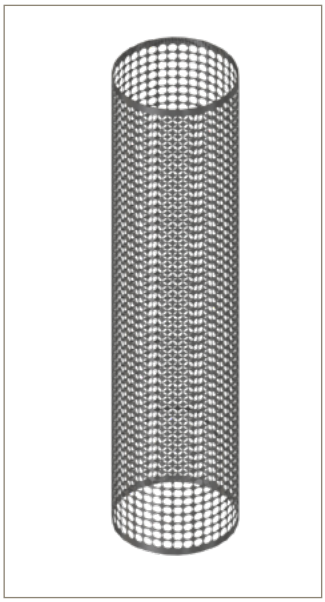

Filter for Parker Bestobell Cryogenic Strainers

Spares Kits

Pressure Regulators

Pressure Regulators - Bronze

CK Series

Valve Pressure Rating	22-58 PSI (1.5-4.0 bar)	59 - 145 PSI (4.1 - 10.0 bar)	146-363 PSI (10.1 - 25.0 bar)
Gasket/Seal Kit	CKRDN15		
Bellow/Seal Kit	CKBDN15		
Diaphragm Kit	CKDLDN15	CKDMDN15	CKDHDN15
Main Spring Kit	CKSLDN15	CKSMDN15	CKSHDN15

Gasket/Seal Kit	
Content	**Quantity**
Gasket	1
Seal	1

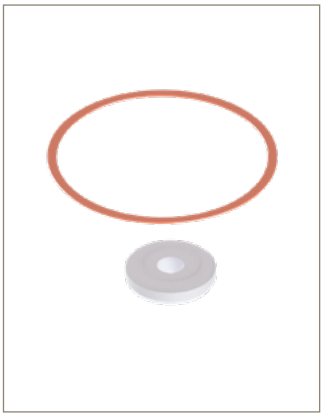

Gasket & Seal Kit for Parker Bestobell Cryogenic Pressure Regulators

Bellow/Seal Kit	
Content	**Quantity**
Seal	1
Bellows Seal assembly	1
Gasket	2
Spring	1

Bellow & Seal Kit for Parker Bestobell Cryogenic Pressure Regulators

Diaphragm Kit	
Content	**Quantity**
Gasket	4
Seal	2
Anti-vibration disc	1
Diaphragm	4
Nut lock	1
Plate Thrust	1

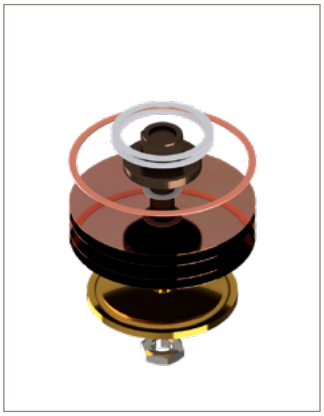

Diaphragm Kit for Parker Bestobell Cryogenic Pressure Regulators

Main Spring Kit	
Content	**Quantity**
Gasket	1
Spring	1

Main Spring Kit for Parker Bestobell Cryogenic Pressure Regulators

Appendix

Flow Data - Safety Relief Valves

	Inlet Size	1/2" 3/4"	3/4" 1"	1" 1-1/4"
	d_o (mm)	11.4	14.0	20.5
	A_o (mm²)	102	154	330
	α (outflow coefficient)	0.37	0.53	0.45
	Media	Air in Nm3/hr		
SET PRESSURE IN BAR G	2.0	83	183	334
	2.5	97	214	390
	3.0	111	245	447
	3.5	126	276	504
	4.0	140	307	561
	5.0	168	370	675
	6.0	197	432	789
	7.0	225	495	903
	8.0	253	557	1017
	9.0	282	620	1131
	10.0	310	682	1246
	12.0	367	807	1474
	14.0	424	932	1702
	16.0	480	1057	1930
	18.0	537	1182	2158
	20.0	594	1306	2386
	22.0	651	1431	2614
	24.0	708	1556	2842
	26.0	769	1662	3024
	28.0	821	1806	3298
	30.0	878	1931	3426
	32.0	935	2056	-
	34.0	991	2181	-
	36.0	1048	2306	-
	38.0	1105	2430	-
	40.0	1162	2555	-

	Inlet Size	1/2" 3/4"	3/4" 1"	1" 1-1/4"
	d_o (inch)	0.449	0.551	0.807
	A_o (in²)	0.158	0.239	0.512
	α (outflow coefficient)	0.37	0.53	0.45
	Media	Air in SCFM		
SET PRESSURE IN PSI	29	49	108	197
	36	57	126	230
	44	65	144	263
	51	74	162	297
	58	82	181	330
	73	99	218	397
	87	116	254	464
	102	132	291	531
	116	149	328	599
	131	166	365	666
	145	182	401	733
	174	216	475	867
	203	250	548	1002
	232	282	622	1136
	261	316	696	1270
	290	350	769	1404
	319	383	842	1538
	348	417	916	1673
	378	453	978	1780
	407	483	1063	1941
	436	517	1136	2016
	465	550	1210	-
	494	583	1284	-
	523	617	1357	-
	552	650	1430	-
	581	684	1504	-

The capacity indicated above is for a fully opened valve:
d_o - orifice
A_o - flow area

Media:
Air in m³/hr at 0°C and 1013.25 mbar
Air in SCFM at 60°F (15.6°C) and 14.7 psia (1013.25 mbar)

Please contact us for further options.

Offer of Sale

The items described in this document and other documents and descriptions provided by Parker Hannifin Corporation, its subsidiaries and its authorized distributors ("Seller") are hereby offered for sale at prices to be established by Seller. This offer and its acceptance by any customer ("Buyer") shall be governed by all of the following Terms and Conditions. Buyer's order for any item described in its document, when communicated to Seller verbally, or in writing, shall constitute acceptance of this offer. All goods or work described will be referred to as "Products".

1. Terms and Conditions. Seller's willingness to offer Products, or accept an order for Products, to or from Buyer is expressly conditioned on Buyer's assent to these Terms and Conditions and to the terms and conditions found on-line at www.parker.com/saleterms/. Seller objects to any contrary or additional term or condition of Buyer's order or any other document issued by Buyer.

2. Price Adjustments; Payments. Prices stated on the reverse side or preceding pages of this document are valid for 30 days. After 30 days, Seller may change prices to reflect any increase in its costs resulting from state, federal or local legislation, price increases from its suppliers, or any change in the rate, charge, or classification of any carrier. The prices stated on the reverse or preceding pages of this document do not include any sales, use, or other taxes unless so stated specifically. Unless otherwise specified by Seller, all prices are F.O.B. Seller's facility, and payment is due 30 days from the date of invoice. After 30 days, Buyer shall pay interest on any unpaid invoices at the rate of 1.5% per month or the maximum allowable rate under applicable law.

3. Delivery Dates; Title and Risk; Shipment. All delivery dates are approximate and Seller shall not be responsible for any damages resulting from any delay. Regardless of the manner of shipment, title to any products and risk of loss or damage shall pass to Buyer upon tender to the carrier at Seller's facility (i.e., when it's on the truck, it's yours). Unless otherwise stated, Seller may exercise its judgment in choosing the carrier and means of delivery. No deferment of shipment at Buyers' request beyond the respective dates indicated will be made except on terms that will indemnify, defend and hold Seller harmless against all loss and additional expense. Buyer shall be responsible for any additional shipping charges incurred by Seller due to Buyer's changes in shipping, product specifications or in accordance with Section 13, herein.

4. Warranty. Seller warrants that the Products sold here-under shall be free from defects in material or workmanship for a period of twelve months from the date of delivery to Buyer or 2,000 hours of normal use, whichever occurs first. This warranty is made only to Buyer and does not extend to anyone to whom Products are sold after purchased from Seller. The prices charged for Seller's products are based upon the exclusive limited warranty stated above, and upon the following disclaimer: DISCLAIMER OF WARRANTY: THIS WARRANTY COMPRISES THE SOLE AND ENTIRE WARRANTY PERTAINING TO PRODUCTS PROVIDED HEREUNDER. SELLER DISCLAIMS ALL OTHER WARRANTIES, EXPRESS AND IMPLIED, INCLUDING MERCHANTABILITY AND FITNESS FOR A PARTICULAR PURPOSE.

5. Claims; Commencement of Actions. Buyer shall promptly inspect all Products upon delivery. No claims for shortages will be allowed unless reported to the Seller within 10 days of delivery. No other claims against Seller will be allowed unless asserted in writing within 60 days after delivery or, in the case of an alleged breach of warranty, within 30 days after the date within the warranty period on which the defect is or should have been discovered by Buyer. Any action based upon breach of this agreement or upon any other claim arising out of this sale (other than an action by Seller for any amount due to Seller from Buyer) must be commenced within thirteen months from the date of tender of delivery by Seller or, for a cause of action based upon an alleged breach of warranty, within thirteen months from the date within the warranty period on which the defect is or should have been discovered by Buyer.

6. LIMITATION OF LIABILITY. UPON NOTIFICATION, SELLER WILL, AT ITS OPTION, REPAIR OR REPLACE A DEFECTIVE PRODUCT, OR REFUND THE PURCHASE PRICE. IN NO EVENT SHALL SELLER BE LIABLE TO BUYER FOR ANY SPECIAL, INDIRECT, INCIDENTAL OR CONSEQUENTIAL DAMAGES ARISING OUT OF, OR AS THE RESULT OF, THE SALE, DELIVERY, NON-DELIVERY, SERVICING, USE OR LOSS OF USE OF THE PRODUCTS OR ANY PART THEREOF, OR FOR ANY CHARGES OR EXPENSES OF ANY NATURE INCURRED WITHOUT SELLER'S WRITTEN CONSENT, EVEN IF SELLER HAS BEEN NEGLIGENT, WHETHER IN CONTRACT, TORT OR OTHER LEGAL THEORY. IN NO EVENT SHALL SELLER'S LIABILITY UNDER ANY CLAIM MADE BY BUYER EXCEED THE PURCHASE PRICE OF THE PRODUCTS.

7. Contingencies. Seller shall not be liable for any default or delay in performance if caused by circumstances beyond the reasonable control of Seller.

8. User Responsibility. The user, through its own analysis and testing, is solely responsible for making the final selection of the system and Product and assuring that all performance, endurance, maintenance, safety and warning requirements of the application are met. The user must analyze all aspects of the application and follow applicable industry standards and Product information. If Seller provides Product or system options, the user is responsible for determining that such data and specifications are suitable and sufficient for all applications and reasonably foreseeable uses of the Products or systems.

9. Loss to Buyer's Property. Any designs, tools, patterns, materials, drawings, confidential information or equipment furnished by Buyer or any other items which become Buyer's property, may be considered obsolete and may be destroyed by Seller after two consecutive years have elapsed without Buyer placing an order for the items which are manufactured using such property. Seller shall not be responsible for any loss or damage to such property while it is in Seller's possession or control.

10. Special Tooling. A tooling charge may be imposed for any special tooling, including without limitation, dies, fixtures, molds and patterns, acquired to manufacture Products.

Such special tooling shall be and remain Seller's property notwithstanding payment of any charges by Buyer. In no event will Buyer acquire any interest in apparatus belonging to Seller which is utilized in the manufacture of the Products, even if such apparatus has been specially converted or adapted for such manufacture and notwithstanding any charges paid by Buyer. Unless otherwise agreed, Seller shall have the right to alter, discard or otherwise dispose of any special tooling or other property in its sole discretion at any time.

11. Buyer's Obligation; Rights of Seller. To secure payment of all sums due or otherwise, Seller shall retain a security interest in the goods delivered and this agreement shall be deemed a Security Agreement under the Uniform Commercial Code. Buyer authorizes Seller as its attorney to execute and file on Buyer's behalf all documents Seller deems necessary to perfect its security interest. Seller shall have a security interest in, and lien upon, any property of Buyer in Seller's possession as security for the payment of any amounts owed to Seller by Buyer.

12. Improper use and Indemnity. Buyer shall indemnify, defend, and hold Seller harmless from any claim, liability, damages, lawsuits, and costs (including attorney fees), whether for personal injury, property damage, patent, trademark or copyright infringement or any other claim, brought by or incurred by Buyer, Buyer's employees, or any other person, arising out of: (a) improper selection, improper application or other misuse of Products purchased by Buyer from Seller; (b) any act or omission, negligent or otherwise, of Buyer; (c) Seller's use of patterns, plans, drawings, or specifications furnished by Buyer to manufacture Product; or (d) Buyer's failure to comply with these terms and conditions. Seller shall not indemnify Buyer under any circumstance except as otherwise provided.

13. Cancellations and Changes. Orders shall not be subject to cancellation or change by Buyer for any reason, except with Seller's written consent and upon terms that will indemnify, defend and hold Seller harmless against all direct, incidental and consequential loss or damage. Seller may change product features, specifications, designs and availability with notice to Buyer.

14. Limitation on Assignment. Buyer may not assign its rights or obligations under this agreement without the prior written consent of Seller.

15. Entire Agreement. This agreement contains the entire agreement between the Buyer and Seller and constitutes the final, complete and exclusive expression of the terms of the agreement. All prior or contemporaneous written or oral agreements or negotiations with respect to the subject matter are herein merged.

16. Waiver and Severability. Failure to enforce any provision of this agreement will not waive that provision nor will any such failure prejudice Seller's right to enforce that provision in the future. Invalidation of any provision of this agreement by legislation or other rule of law shall not invalidate any other provision herein. The remaining provisions of this agreement will remain in full force and effect.

17. Termination. This agreement may be terminated by Seller for any reason and at any time by giving Buyer thirty (30) days written notice of termination. In addition, Seller may by written notice immediately terminate this agreement for the following: (a) Buyer commits a breach of any provision of this agreement (b) the appointment of a trustee, receiver or custodian for all or any part of Buyer's property (c) the filing of a petition for relief in bankruptcy of the other Party on its own behalf, or by a third party (d) an assignment for the benefit of creditors, or (e) the dissolution or liquidation of the Buyer.

18. Governing Law. This agreement and the sale and delivery of all Products hereunder shall be deemed to have taken place in and shall be governed and construed in accordance with the laws of the State of Ohio, as applicable to contracts executed and wholly performed therein and without regard to conflicts of laws principles. Buyer irrevocably agrees and consents to the exclusive jurisdiction and venue of the courts of Cuyahoga County, Ohio with respect to any dispute, controversy or claim arising out of or relating to this agreement. Disputes between the parties shall not be settled by arbitration unless, after a dispute has arisen, both parties expressly agree in writing to arbitrate the dispute.

19. Indemnity for Infringement of Intellectual Property Rights. Seller shall have no liability for infringement of any patents, trademarks, copyrights, trade dress, trade secrets or similar rights except as provided in this Section. Seller will defend and indemnify Buyer against allegations of infringement of U.S. patents, U.S. trademarks, copyrights, trade dress and trade secrets ("Intellectual Property Rights"). Seller will defend at its expense and will pay the cost of any settlement or damages awarded in an action brought against Buyer based on an allegation that a Product sold pursuant to this Agreement infringes the Intellectual Property Rights of a third party. Seller's obligation to defend and indemnify Buyer is contingent on Buyer notifying Seller within ten (10) days after Buyer becomes aware of such allegations of infringement, and Seller having sole control over the defense of any allegations or actions including all negotiations for settlement or compromise. If a Product is subject to a claim that it infringes the Intellectual Property Rights of a third party, Seller may, at its sole expense and option, procure for Buyer the right to continue using the Product, replace or modify the Product so as to make it noninfringing, or offer to accept return of the Product and return the purchase price less a reasonable allowance for depreciation. Notwithstanding the foregoing, Seller shall have no liability for claims of infringement based on information provided by Buyer, or directed to Products delivered hereunder for which the designs are specified in whole or part by Buyer, or infringements resulting from the modification, combination or use in a system of any Product sold hereunder. The foregoing provisions of this Section shall constitute Seller's sole and exclusive liability and Buyer's sole and exclusive remedy for infringement of Intellectual Property Rights.

20. Taxes. Unless otherwise indicated, all prices and charges are exclusive of excise, sales, use, property, occupational or like taxes which may be imposed by any taxing authority upon the manufacture, sale or delivery of Products.

21. Equal Opportunity Clause. For the performance of government contracts and where dollar value of the Products exceed $10,000, the equal employment opportunity clauses in Executive Order 11246, VEVRAA, and 41 C.F.R. §§ 60-1.4(a), 60-741.5(a), and 60-250.4, are hereby incorporated.

WARNING USER RESPONSIBILITY

FAILURE OR IMPROPER SELECTION OR IMPROPER USE OF THE PRODUCTS DESCRIBED HEREIN OR RELATED ITEMS CAN CAUSE DEATH, PERSONAL INJURY AND PROPERTY DAMAGE.

This document and other information from Parker Hannifin Corporation, its subsidiaries and authorized distributors provide product or system options for further investigation by users having technical expertise.

The user, through its own analysis and testing, is solely responsible for making the final selection of the system and components and assuring that all performance, endurance, maintenance, safety and warning requirements of the application are met. The user must analyse all aspects of the application, follow applicable industry standards, and follow the information concerning the product in the current product catalogue and in any other materials provided from Parker or its subsidiaries or authorized distributors.

To the extent that Parker or its subsidiaries or authorized distributors provide component or system options based upon data or specifications provided by the user, the user is responsible for determining that such data and specifications are suitable and sufficient for all applications and reasonably foreseeable uses of the components or systems.

Authorized Distributor
MONILEK OILFIELD

E: sales@monilek.com
W: www.monilekgroup.com

Parker Hannifin Manufacturing Ltd.
Instrumentation Products Division Europe
President Way
Sheffield S4 7UR
United Kingdom

phone 0044 (0)114 224 0200
www.parker.com/ipd

5190-BBV 30.04.234 October 2025

Your Local Authorized Parker Distributor

© 2025 Parker Hannifin Corporation