Authorized Distributor
MONILEK OILFIELD

E: sales@monilek.com
W: www.monilekgroup.com

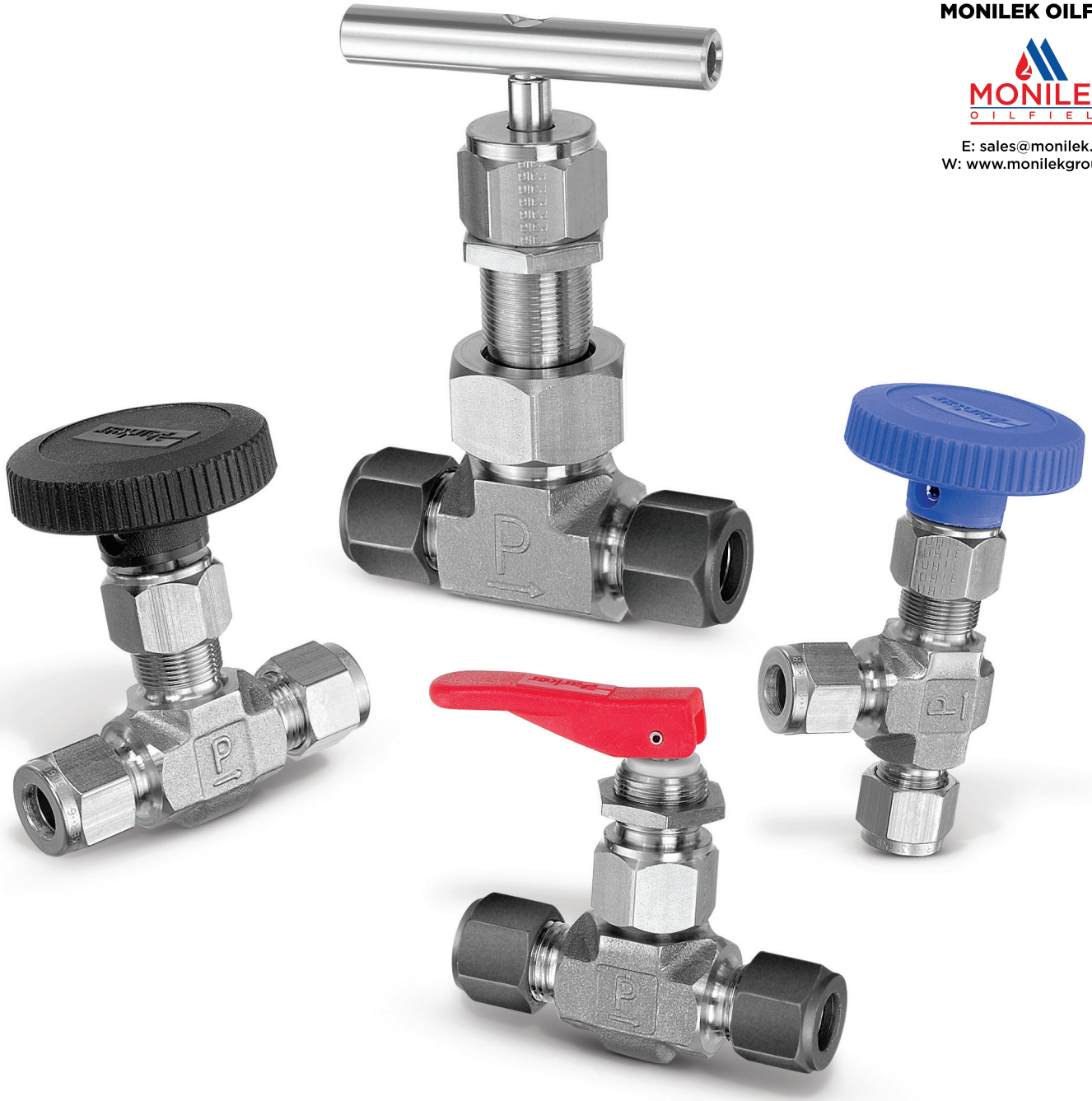

Needle Valves

Catalog 4110-NV

June 2019

aerospace
climate control
electromechanical
filtration
fluid & gas handling
hydraulics
pneumatics
process control
sealing & shielding

ENGINEERING YOUR SUCCESS.

Overview

4F-V6LQ-11AC-SS

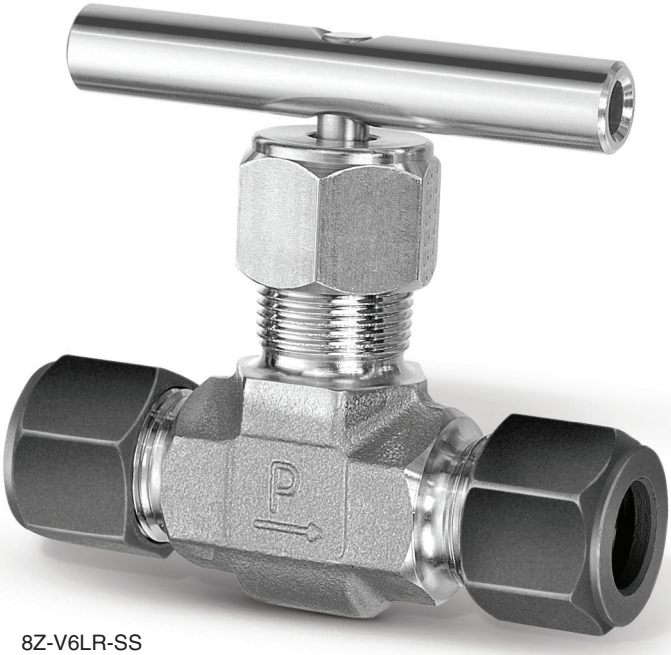

8Z-V6LR-SS

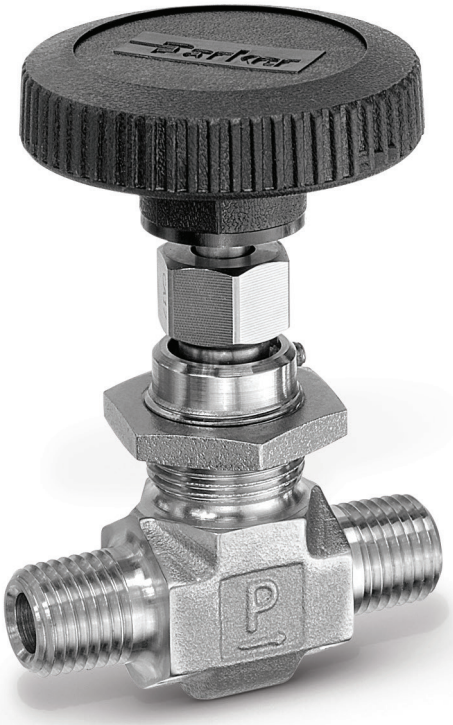

4M-NP6LK-SSP

Parker Hannifin Corporation
Instrumentation Products Division
Jacksonville, AL USA
http://www.parker.com/ipd

Table of Contents

Description ..... **Page**

V Series Needle Valves – Integral Bonnet, 5,000 PSI Maximum* 2

U Series Needle Valves – Union Bonnet, 6,000 PSI Maximum* 8

VQ Series Toggle Valves – 600 PSI Maximum* 14

NP6 Series Needle Valves – Screwed Bonnet, 6,000 PSI Maximum* 16

SN6 Series Needle Valves – Integral Bonnet, 6,000 PSI Maximum* 20

PV Series Needle Valves – Rising Stem Plug Valve, 6,000 PSI Maximum* 22

MPI™ Medium Pressure Products 25

End Connections 42

Offer of Sale 43

* Actual pressure rating will be determined by the valve configuration, body material, seat material and other factors.

⚠ WARNING – USER RESPONSIBILITY

FAILURE OR IMPROPER SELECTION OR IMPROPER USE OF THE PRODUCTS DESCRIBED HEREIN OR RELATED ITEMS CAN CAUSE DEATH, PERSONAL INJURY AND PROPERTY DAMAGE.

This document and other information from Parker-Hannifin Corporation, its subsidiaries and authorized distributors provide product or system options for further investigation by users having technical expertise.

The user, through its own analysis and testing, is solely responsible for making the final selection of the system and components and assuring that all performance, endurance, maintenance, safety and warning requirements of the application are met. The user must analyze all aspects of the application, follow applicable industry standards, and follow the information concerning the product in the current product catalog and in any other materials provided from Parker or its subsidiaries or authorized distributors.

To the extent that Parker or its subsidiaries or authorized distributors provide component or system options based upon data or specifications provided by the user, the user is responsible for determining that such data and specifications are suitable and sufficient for all applications and reasonably foreseeable uses of the components or systems.

Offer of Sale

The items described in this document are hereby offered for sale by Parker-Hannifin Corporation, its subsidiaries or its authorized distributors. This offer and its acceptance are governed by the provisions stated in the detailed "Offer of Sale" elsewhere in this document or available at www.parker.com/ipdus.

© Copyright 2019 Parker Hannifin Corporation. All Rights Reserved.

Parker Hannifin Corporation
Instrumentation Products Division
Jacksonville, AL USA
http://www.parker.com/ipd

V

Introduction

Parker V Series Needle Valves are designed for positive leak tight shut-off and regulation of fluids in process, power, and instrumentation applications. With a wide variety of port sizes and styles, temperature capabilities ranging from -65°F to 450°F (-54°C to 232°C) and pressures to 5000 psig (345 bar), V Series Needle Valves provide the user with the utmost in flexibility when designing miniaturized tubing or piping systems.

Features

- Choice of three stem types:
  - R-Stem – All metal, blunt stem tip
  - N-Stem – All metal, tapered needle stem tip
  - K-Stem – PCTFE stem tip
- Differential hardness between the strain hardened stem and cold formed body threads provides improved cycle life
- Choice of PTFE packing or elastomeric O-ring stem seals
- 316 Stainless Steel, Brass and Monel® Alloy 400 construction
- Inline and angle patterns
- Wide variety of US Customary and SI ports
- Panel mountable
- 100% factory tested
- Optional color coded handles

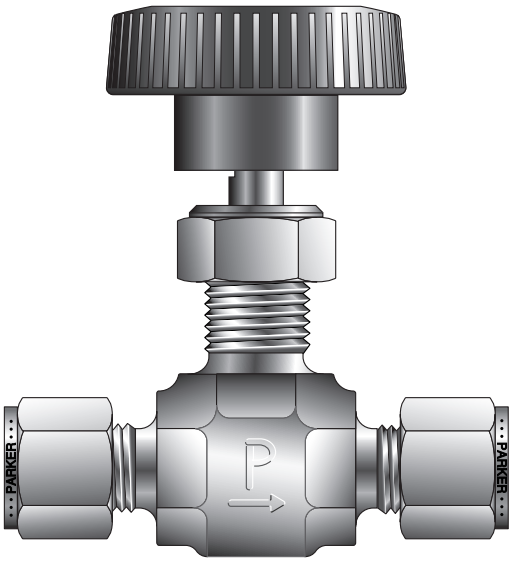

Model Shown: 4Z-V4LK-SS

Specifications

Pressure Ratings:

316 Stainless Steel: 5000 psig (345 bar) CWP
Brass and Monel® Alloy 400:
3000 psig (207 bar) CWP

Orifice: 0.078" to 0.312" (2.0mm to 7.9mm)

C_V: 0.12 to 1.90

Port size: 1/8" to 3/4" (3mm to 12mm)

Temperature Ratings:

Stainless Steel and Monel® Alloy 400:
-65°F to 450°F (-54°C to 232°C)
Brass: -65°F to 400°F (-54°C to 204°C)
PTFE Packing:
-65°F to 450°F (-54°C to 232°C)
PCTFE Stem Tip:
-65°F to 350°F (-54°C to 177°C)
Nitrile Rubber Stem Seal:
-30°F to 250°F (-34°C to 121°C)
Fluorocarbon Rubber Stem Seal:
-15°F to 400°F (-26°C to 204°C)
Ethylene Propylene Rubber Stem Seal:
-70°F to 275°F (-57°C to 135°C)

Note: When combining body, seat and seal materials, the most restrictive temperature rating becomes the limiting factor on temperature range.

Monel® Alloy 400 is the registered trademark of Special Metals Corporation.

Materials of Construction (with PTFE Packing)

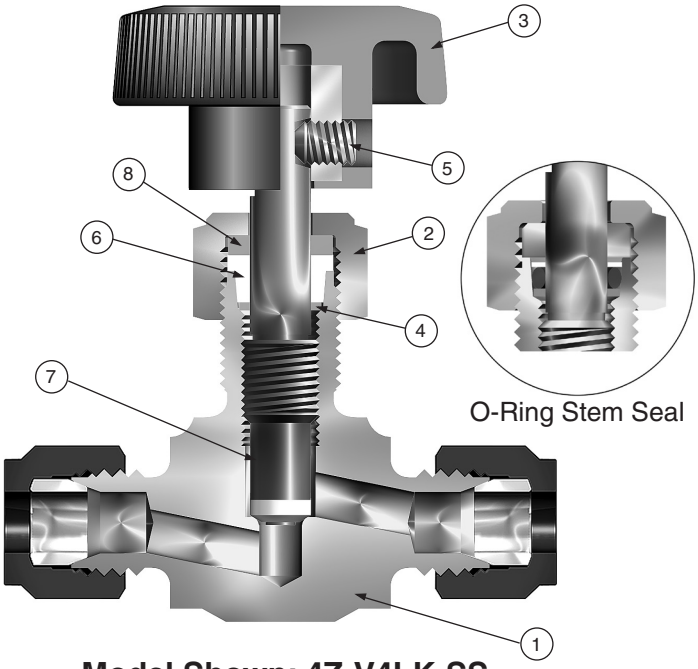

Model Shown: 4Z-V4LK-SS

Parker Hannifin Corporation
Instrumentation Products Division
Jacksonville, AL USA
http://www.parker.com/ipd

V

Stem Types

K
PCTFE tipped

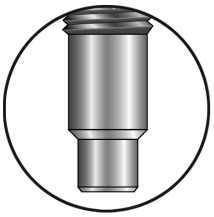

N
Needle (2-1/2°)

R
Blunt (30°)

Pressure vs. Temperature

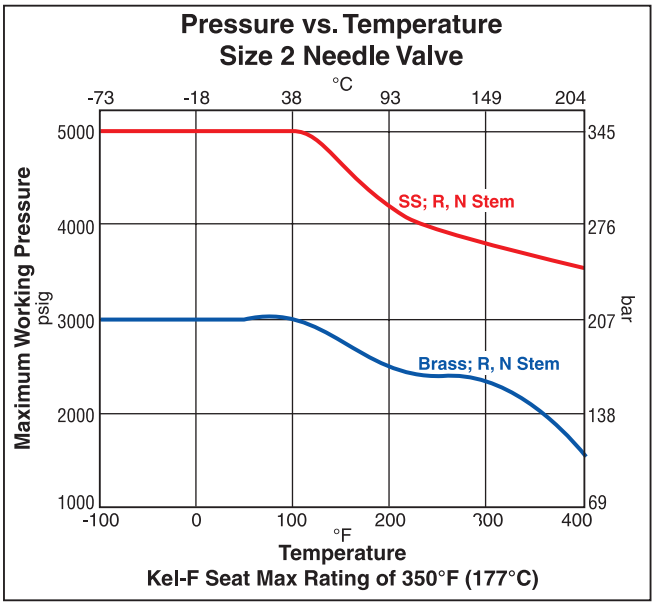

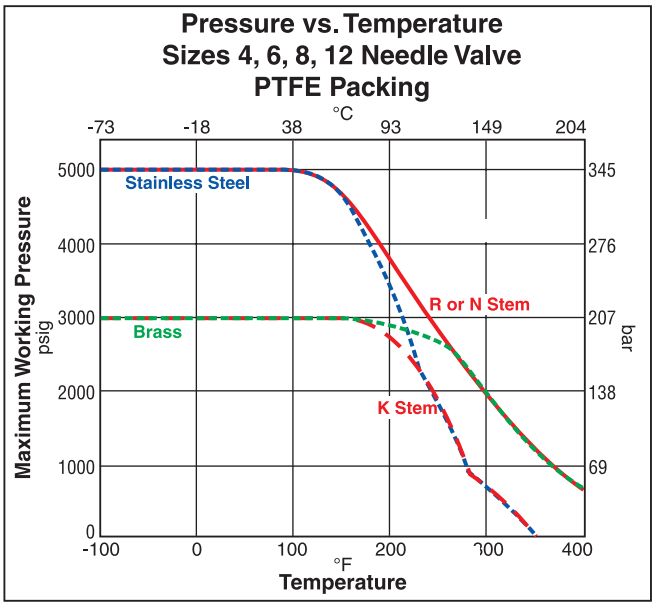

Note: To determine MPa, multiply bar by 0.1

Materials of Construction (with PTFE Packing)

Item #	Part Description	Stainless Steel	Brass	Monel® Alloy 400
1	Body	ASTM A 182 Type F316	ASTM B 283 Alloy C37700	ASTM B 564 Alloy N04400
2	Packing Nut	ASTM A 479 Type 316	ASTM A 479 Type 316	ASTM A 479 Type 316
3	Handle*	Nylon 6/6 with SS insert	Nylon 6/6 with SS insert	Nylon 6/6 with SS insert
4	Lower Packing Washer	ASTM A 479 Type 316	ASTM A 479 Type 316	ASTM B 164 Alloy N04400
5	Handle Screw	Stainless Steel	Stainless Steel	Stainless Steel
6	Packing**	PTFE	PTFE	PTFE
7	Stem (R and N Stem)	ASTM A 276 Type 316	ASTM A 276 Type 316	ASTM B 164 Alloy N04400
7A	Stem (K Stem)	ASTM A 276 Type 316, with PCTFE	ASTM A 276 Type 316, with PCTFE	ASTM B 164 with PCTFE
8	Upper Packing Washer	Brass	Brass	Brass
9	Panel Nut***	316 Stainless Steel	316 Stainless Steel	316 Stainless Steel

* Handles for V8 and V12 Series Valves with R and N Stems are aluminum T-bars.
** Optional O-ring elastomeric stem seals are available – See How to Order.
*** Panel Nut is nickel plated brass on V2 Series Valves. Panel Nuts must be ordered separately – See page 7.
Lubrication: Perfluorinated Polyether

Parker Hannifin Corporation
Instrumentation Products Division
Jacksonville, AL USA
http://www.parker.com/ipd

V

Dimensions / Flow Data

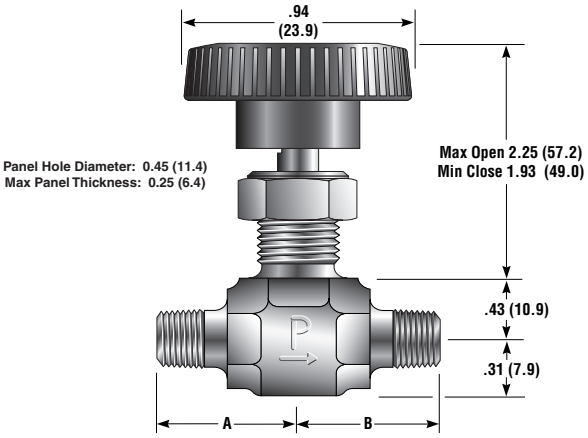

Model Shown: 2M-V2LN-SS

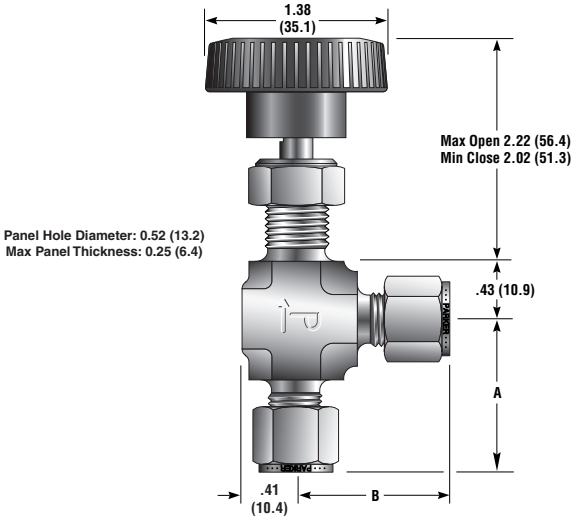

Model Shown: 4A-V4AR-BN-B

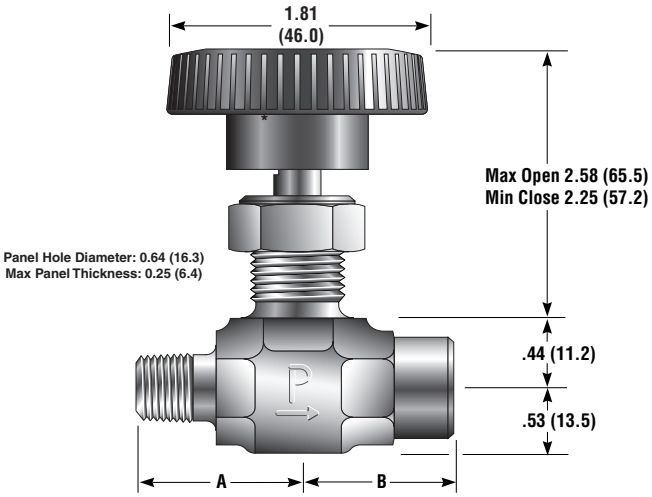

Model Shown: 6M4F-V6LR-V-SS

* Note: Handle diameter for K Stem V6 Series Valves is 1.38 (35.4)
( ) Denotes dimensions in millimeters

Parker Hannifin Corporation
Instrumentation Products Division
Jacksonville, AL USA
http://www.parker.com/ipd

V

Dimensions / Flow Data

Basic Part Number		End Connections		Stem Type	Flow Data						Dimensions
		Inlet (Port 1)	Outlet (Port 2)		Orifice		Inline		Angle		A† and B†
Inline	Angle				Inch	mm	C_V	X_T*	C_V	X_T*	Inch (mm)
2A-V2LR-SS	2A-V2AR-SS	1/8" Compression A-LOK®		Blunt	0.078	2.0	0.12	0.78	0.14	0.67	1.01 (25.7)
2A-V2LN-SS	2A-V2AN-SS			Needle			0.12	0.80	0.14	0.63	
2A-V2LK-SS	2A-V2AK-SS			PCTFE			0.13	0.83	0.14	0.63	
2F-V2LR-SS	2F-V2AR-SS	1/8" Female NPT		Blunt	0.093	2.4	0.13	0.61	0.16	0.49	0.94 (23.9)
2F-V2LN-SS	2F-V2AN-SS			Needle			0.12	0.66	0.18	0.39	
2F-V2LK-SS	2F-V2AK-SS			PCTFE			0.12	0.73	0.17	0.54	
2M-V2LR-SS	2M-V2AR-SS	1/8" Male NPT		Blunt	0.093	2.4	0.13	0.61	0.16	0.49	0.75 (19.1)
2M-V2LN-SS	2M-V2AN-SS			Needle			0.12	0.66	0.18	0.39	
2M-V2LK-SS	2M-V2AK-SS			PCTFE			0.12	0.73	0.17	0.54	
2Z-V2LR-SS	2Z-V2AR-SS	1/8" Compression CPI™		Blunt	0.078	2.0	0.12	0.78	0.14	0.67	1.01 (25.7)
2Z-V2LN-SS	2Z-V2AN-SS			Needle			0.12	0.80	0.14	0.63	
2Z-V2LK-SS	2Z-V2AK-SS			PCTFE			0.13	0.83	0.14	0.63	
2F-V4LR-SS	2F-V4AR-SS	1/8" Female NPT		Blunt	0.176	4.5	0.43	0.77	0.55	0.63	0.81 (20.6)
2F-V4LN-SS	2F-V4AN-SS			Needle			0.43	0.69	0.55	0.63	
2F-V4LK-SS	2F-V4AK-SS			PCTFE			0.45	0.55	0.58	0.68	
4A-V4LR-SS	4A-V4AR-SS	1/4" Compression A-LOK®		Blunt	0.176	4.5	0.43	0.85	0.55	0.63	1.15 (29.2)
4A-V4LN-SS	4A-V4AN-SS			Needle			0.43	0.77	0.55	0.63	
4A-V4LK-SS	4A-V4AK-SS			PCTFE			0.45	0.69	0.58	0.68	
4M-V4LR-SS	4M-V4AR-SS	1/4" Male NPT		Blunt	0.176	4.5	0.43	0.85	0.55	0.63	0.94 (23.9)
4M-V4LN-SS	4M-V4AN-SS			Needle			0.43	0.77	0.55	0.63	
4M-V4LK-SS	4M-V4AK-SS			PCTFE			0.45	0.69	0.58	0.68	
4Z-V4LR-SS	4Z-V4AR-SS	1/4" Compression CPI™		Blunt	0.176	4.5	0.43	0.85	0.55	0.63	1.15 (29.2)
4Z-V4LN-SS	4Z-V4AN-SS			Needle			0.43	0.77	0.55	0.63	
4Z-V4LK-SS	4Z-V4AK-SS			PCTFE			0.45	0.69	0.58	0.68	
M6A-V4LR-SS	M6A-V4AR-SS	6mm Compression A-LOK®		Blunt	0.156	4.0	0.37	0.78	0.48	0.60	1.15 (29.2)
M6A-V4LN-SS	M6A-V4AN-SS			Needle			0.37	0.72	0.48	0.58	
M6A-V4LK-SS	M6A-V4AK-SS			PCTFE			0.39	0.62	0.51	0.64	
M6Z-V4LR-SS	M6Z-V4AR-SS	6mm Compression CPI™		Blunt	0.156	4.0	0.37	0.78	0.48	0.60	1.15 (29.2)
M6Z-V4LN-SS	M6Z-V4AN-SS			Needle			0.37	0.72	0.48	0.58	
M6Z-V4LK-SS	M6Z-V4AK-SS			PCTFE			0.39	0.62	0.51	0.64	
4F-V6LR-SS	4F-V6AR-SS	1/4" Female NPT		Blunt	0.228	5.8	0.73	0.90	1.23	0.50	0.94 (23.9)
4F-V6LN-SS	4F-V6AN-SS			Needle			0.55	0.61	0.92	0.62	
4F-V6LK-SS	4F-V6AK-SS			PCTFE			0.80	0.87	1.23	0.56	
6A-V6LR-SS	6A-V6AR-SS	3/8" Compression A-LOK®		Blunt	0.228	5.8	0.73	0.90	1.23	0.50	1.29 (32.8)
6A-V6LN-SS	6A-V6AN-SS			Needle			0.55	0.61	0.92	0.62	
6A-V6LK-SS	6A-V6AK-SS			PCTFE			0.80	0.87	1.23	0.56	
6M-V6LR-SS	6M-V6AR-SS	3/8" Male NPT		Blunt	0.228	5.8	0.73	0.90	1.23	0.50	1.03 (26.2)
6M-V6LN-SS	6M-V6AN-SS			Needle			0.55	0.61	0.92	0.62	
6M-V6LK-SS	6M-V6AK-SS			PCTFE			0.80	0.87	1.23	0.56	
6Z-V6LR-SS	6Z-V6AR-SS	3/8" Compression CPI™		Blunt	0.228	5.8	0.73	0.90	1.23	0.50	1.29 (32.8)
6Z-V6LN-SS	6Z-V6AN-SS			Needle			0.55	0.61	0.92	0.62	
6Z-V6LK-SS	6Z-V6AK-SS			PCTFE			0.80	0.87	1.23	0.56	
M10A-V6LR-SS	M10A-V6AR-SS	10mm Compression A-LOK®		Blunt	0.228	5.8	0.73	0.90	1.23	0.50	1.30 (33.0)
M10A-V6LN-SS	M10A-V6AN-SS			Needle			0.55	0.61	0.92	0.62	
M10A-V6LK-SS	M10A-V6AK-SS			PCTFE			0.80	0.87	1.23	0.56	
M10Z-V6LR-SS	M10Z-V6AR-SS	10mm Compression CPI™		Blunt	0.228	5.8	0.73	0.90	1.23	0.50	1.30 (33.0)
M10Z-V6LN-SS	M10Z-V6AN-SS			Needle			0.55	0.61	0.92	0.62	
M10Z-V6LK-SS	M10Z-V6AK-SS			PCTFE			0.80	0.87	1.23	0.56	

* Tested in accordance with ISA S75.02. Gas flow will be choked when $P_1 - P_2 / P_1 = x_T$.
† For CPI™ and A-LOK®, dimensions are measured with nuts in the finger tight position.

( ) Denotes dimensions in millimeters

Dimensions in inches/millimeters are for reference only, subject to change.

Parker Hannifin Corporation
Instrumentation Products Division
Jacksonville, AL USA
http://www.parker.com/ipd

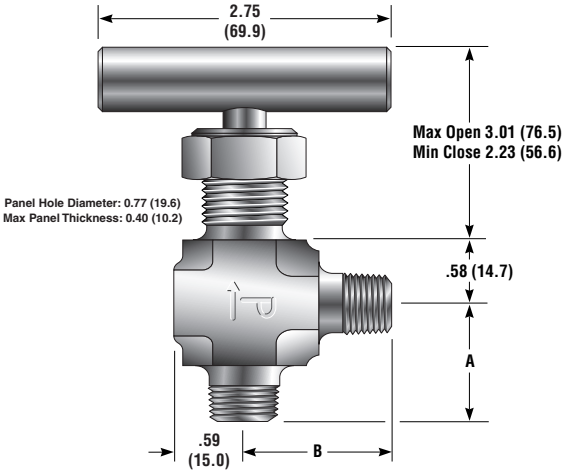

Model Shown: 8M-V8AN-EPR-SS

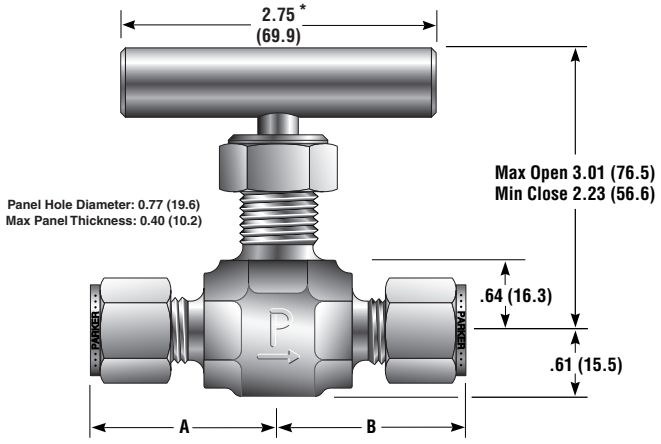

Model Shown: 10Z-V12LN-B

Dimensions / Flow Data - continued

Basic Part Number		End Connections		Stem Type	Flow Data						Dimensions
		Inlet (Port 1)	Outlet (Port 2)		Orifice		Inline		Angle		A† and B†
Inline	Angle				Inch	mm	C_V	X_T*	C_V	X_T*	Inch (mm)
6F-V8LR-SS	6F-V8AR-SS	3/8" Female NPT		Blunt	0.312	7.9	1.23	0.87	1.66	0.72	1.34 (34.0)
6F-V8LN-SS	6F-V8AN-SS			Needle			1.05	0.83	1.28	0.80	
6F-V8LK-SS	6F-V8AK-SS			PCTFE			1.29	0.91	1.90	0.76	
8A-V8LR-SS	8A-V8AR-SS	1/2" Compression A-LOK®		Blunt	0.312	7.9	1.23	0.87	1.66	0.72	1.53 (38.9)
8A-V8LN-SS	8A-V8AN-SS			Needle			1.05	0.83	1.28	0.80	
8A-V8LK-SS	8A-V8AK-SS			PCTFE			1.29	0.91	1.90	0.76	
8M-V8LR-SS	8M-V8AR-SS	1/2" Male NPT		Blunt	0.312	7.9	1.23	0.87	1.66	0.72	1.34 (34.0)
8M-V8LN-SS	8M-V8AN-SS			Needle			1.05	0.83	1.28	0.80	
8M-V8LK-SS	8M-V8AK-SS			PCTFE			1.29	0.91	1.90	0.76	
8Z-V8LR-SS	8Z-V8AR-SS	1/2" Compression CPI™		Blunt	0.312	7.9	1.23	0.87	1.66	0.72	1.53 (38.9)
8Z-V8LN-SS	8Z-V8AN-SS			Needle			1.05	0.83	1.28	0.80	
8Z-V8LK-SS	8Z-V8AK-SS			PCTFE			1.29	0.91	1.90	0.76	
M12A-V8LR-SS	M12A-V8AR-SS	12mm Compression A-LOK®		Blunt	0.281	7.1	1.13	0.79	1.52	0.66	1.51 (38.4)
M12A-V8LN-SS	M12A-V8AN-SS			Needle			0.97	0.78	1.18	0.75	
M12A-V8LK-SS	M12A-V8AK-SS			PCTFE			1.18	0.80	1.69	0.66	
M12Z-V8LR-SS	M12Z-V8AR-SS	12mm Compression CPI™		Blunt	0.281	7.1	1.13	0.79	1.52	0.66	1.51 (38.4)
M12Z-V8LN-SS	M12Z-V8AN-SS			Needle			0.97	0.78	1.18	0.75	
M12Z-V8LK-SS	M12Z-V8AK-SS			PCTFE			1.18	0.80	1.69	0.66	
8F-V12LR-SS	8F-V12AR-SS	1/2" Female NPT		Blunt	0.312	7.9	1.23	0.87	1.66	0.72	1.38 (35.1)
8F-V12LN-SS	8F-V12AN-SS			Needle			1.05	0.83	1.28	0.80	
8F-V12LK-SS	8F-V12AK-SS			PCTFE			1.29	0.91	1.90	0.76	
10A-V12LR-SS	10A-V12AR-SS	5/8" Compression A-LOK®		Blunt	0.312	7.9	1.23	0.87	1.66	0.72	1.52 (38.6)
10A-V12LN-SS	10A-V12AN-SS			Needle			1.05	0.83	1.28	0.80	
10A-V12LK-SS	10A-V12AK-SS			PCTFE			1.29	0.91	1.90	0.76	
10Z-V12LR-SS	10Z-V12AR-SS	5/8" Compression CPI™		Blunt	0.312	7.9	1.23	0.87	1.66	0.72	1.52 (38.6)
10Z-V12LN-SS	10Z-V12AN-SS			Needle			1.05	0.83	1.28	0.80	
10Z-V12LK-SS	10Z-V12AK-SS			PCTFE			1.29	0.91	1.90	0.76	
12A-V12LR-SS	12A-V12AR-SS	3/4" Compression A-LOK®		Blunt	0.312	7.9	1.23	0.87	1.66	0.72	1.52 (38.6)
12A-V12LN-SS	12A-V12AN-SS			Needle			1.05	0.83	1.28	0.80	
12A-V12LK-SS	12A-V12AK-SS			PCTFE			1.29	0.91	1.90	0.76	
12Z-V12LR-SS	12Z-V12AR-SS	3/4" Compression CPI™		Blunt	0.312	7.9	1.23	0.87	1.66	0.72	1.52 (38.6)
12Z-V12LN-SS	12Z-V12AN-SS			Needle			1.05	0.83	1.28	0.80	
12Z-V12LK-SS	12Z-V12AK-SS			PCTFE			1.29	0.91	1.90	0.76	

* Tested in accordance with ISA S75.02. Gas flow will be choked when $P_1 - P_2 / P_1 = x_T$.

† For CPI™ and A-LOK®, dimensions are measured with nuts in the finger tight position.

( ) Denotes dimensions in millimeters

Dimensions in inches/millimeters are for reference only, subject to change.

Parker Hannifin Corporation
Instrumentation Products Division
Jacksonville, AL USA
http://www.parker.com/ipd

V

How to Order

The part number sequence identifies product characteristics as shown below

Example: 4Z-V4AK-SS describes an angle pattern V4 Series needle valve equipped with 1/4" CPI™ compression inlet and outlet ports, a PCTFE tipped stem, PTFE seals, and stainless steel construction.

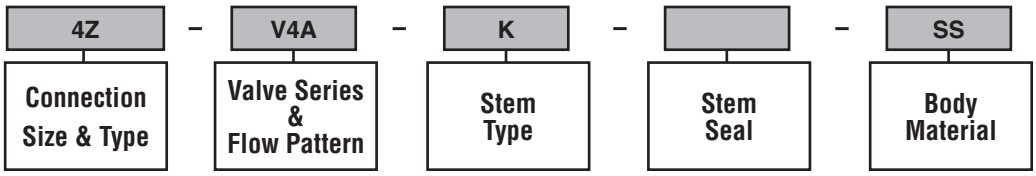

How to Order Options

O-Ring Packing - Add the designator corresponding to the desired elastomer to the part number **BN** - Nitrile Rubber, **EPR** -Ethylene Propylene Rubber, or **V** - Fluorocarbon Rubber. **Example : 6A-V6LN-EPR-SS**

Available Body Materials - **B** (Brass) or - **M** (Monel® Alloy 400) **Example: 8Z-V8LN-B**

Oxygen Cleaning – Add the suffix -**C3** to the end of the part number to receive valves cleaned in accordance with ASTM G93 level C, class 500. This ASTM details cleaning methods and cleanliness levels for materials and equipment used in oxygen-enriched environments. **Example: 4A-V4AN-EPR-SS-C3**

How to Order Components

Colored Round Nylon Handles with Handle Screw – Valve Series-Handle-Color (**B** - blue, **G** - green, **R** - red) **Example: V4-HANDLE-BLUE**

Stainless Steel T-Bar Handles with Handle Screw – **Examples:** V2: V2-BAR-HANDLE-SS; V4: V4-BAR-HANDLE-SS; V6: V6-BAR-HANDLE-SS; V8: U12-BAR-HANDLE-SS; V12: U12-BAR-HANDLE-SS

Aluminum T-Bar Handles with Handle Screw – **Examples:** V2: Not available; V4: V4-BAR-HANDLE-AL; V6: V4-BAR-HANDLE-AL; V8: U12-BAR-HANDLE-AL; V12: U12-BAR-HANDLE-AL

Panel Mounting Nuts – **Examples:** V2: 2-Panel-Nut-SS; V4: 4-Panel-Nut-SS; V6: 6-Panel-Nut-SS; V8: 8-Panel-Nut-SS

How to Order Maintenance Kits

PTFE Packing Stem Kits – Consists of One Stem; One PTFE Packing; One Upper Packing Washer; One Lower Packing Washer; One Packing Nut; Maintenance Instructions.

Kit-Valve Series and StemType-Body Material. **Examples: KIT-V4K-SS; KIT-V6N-B**

Fluorocarbon Rubber Packing Stem Kits – Consists of One Stem; One Fluorocarbon Rubber O-ring Seal; One O-ring Back-up Gland; One O-ring Gland; One Lower Packing Washer; One Packing Nut; Maintenance Instructions.

Kit-Valve Series and Stem Type-V-Body Material. **Examples: KIT-V2R-V-B; KIT-V4K-V-SS**

Nitrile Rubber Packing Stem Kits – Consists of One Stem; One Nitrile Rubber O-ring Seal; One O-ring Back-up Gland; One O-ring Gland; One Lower Packing Washer; One Packing Nut; Maintenance Instructions.

Kit-Valve Series and Stem Type-BN-Body Material. **Examples: KIT-V2R-BN-B; KIT-V4K-BN-SS**

Ethylene Propylene Rubber Packing Stem Kits – Consists of One Stem; One Ethylene Propylene Rubber O-ring Seal; One O-ring Back-up Gland; One O-ring Gland; One Lower Packing Washer; One Packing Nut; Maintenance Instructions.

Kit-Valve Series and Stem Type-EPR-Body Material. **Examples: KIT-V2R-EPR-B; KIT-V4K-EPR-SS**

Parker Hannifin Corporation
Instrumentation Products Division
Jacksonville, AL USA
http://www.parker.com/ipd

U

Introduction

Parker U Series Union Bonnet Valves have been engineered for use at pressures up to 6,000 (414 bar) and temperatures as high as 1,200°F (649°C). A non-rotating lower stem helps to extend packing life by removing rotation from the packing area. Stem packing below the threads isolates the thread lubricant from the flow, ensuring adequate lubrication regardless of the media.

Features

- Union bonnet design ensures high integrity seal under severe service applications
- Packing below the power threads protects thread lubricants from media and isolates the lubricants from the media
- Dust seal in the packing nut protects stem threads from external contamination
- Stem swivel above the packing eliminates entrapment area and increases packing life
- Choice of Grafoil® or PTFE packing
- Choice of Regulating or Blunt stem types. Blunt stem type helps combat wire draw which may occur when two phase flow is present (i.e. steam service)
- 316 stainless steel construction
- Wide variety of US Customary and SI ports
- Panel mountable
- 100% factory tested

Materials of Construction

Item #	Description	Material
*1	Body	ASTM A 182, Type F316
2	Bonnet Nut	ASTM A 479, Type 316
*3	Bonnet	ASTM A 479, Type 316
*4	Lower Stem*	ASTM A 564, Type 630
5	Upper Stem	ASTM A 564, Type 630
6	Stem Guide	ASTM A 581, Type 416
7	Ball	440-C Stainless Steel
*8	Bonnet Seal**	Nickel-Chromium-Iron Alloy
9	Packing Nut	ASTM A 479, Type 316
*10	Packing***	Grafoil®
*11	Packing Washer	316 Stainless Steel
12	Handle****	Aluminum
13	Handle Screw	316 Stainless Steel
14	Dust Seal*****	Nylon 6/6
15	Locking Nut	Stainless Steel

* Wetted parts
* Lower Stem material is ASTM A 276 Type 316 with HT option
** Not required on U6 and U12 Series which have metal-to-metal seals
*** Optional PTFE Packing is available
**** Handle material is stainless steel with HT option
***** Dust Seal not available with HT option
Lubrication: Molybdenum disulfide with soft metallic fillers

Specifications

Pressure Rating:
6000 psig (414 bar) CWP

Temperature Rating:
PTFE packing:
-65°F to 450°F (-54°C to 232°C)
Grafoil® packing:
-65°F to 700°F (-54°C to 371°C)
Grafoil® packing with HT option:
-65°F to 1200°F (-54°C to 649°C)

Orifice: .177" to .437" (4.5mm to 11.1mm)

C_V: .53 to 3.55

Pressure Rating and Tubing Selection:

For working pressures of A-LOK® and CPI™ tube connections, please see the Instrument Tubing Selection Guide (Bulletin 4200-TS), found in the Technical Section of the Parker Instrumentation Products Master Binder, or the Parker Instrument Tube Fitting Installation Manual (Bulletin 4200-B4).

For working pressures of valves with external or internal pipe threads, please see Catalog 4260, Instrumentation Pipe Fittings.

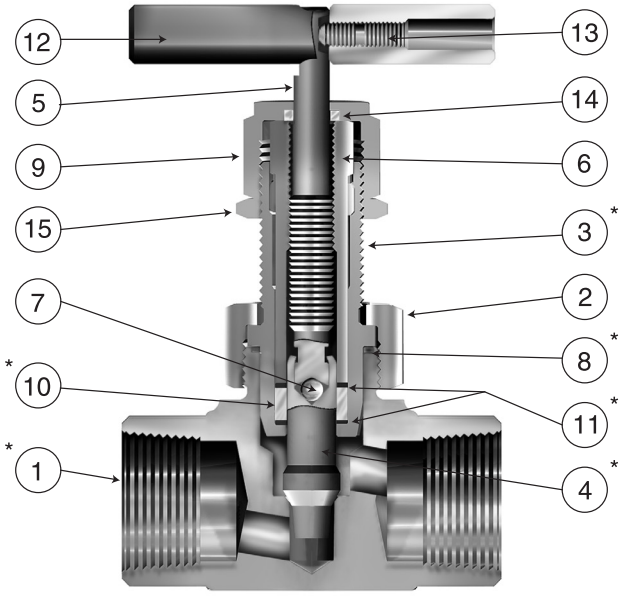

Model Shown: 16F-U16LR-G-SS

Grafoil® is a registered trademark GrafTech International Holdings, Inc.

Parker Hannifin Corporation
Instrumentation Products Division
Jacksonville, AL USA
http://www.parker.com/ipd

Pressure vs. Temperature

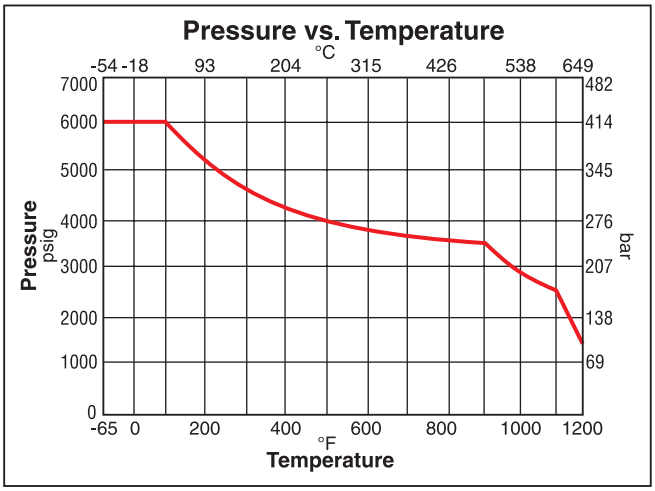

Flow Characteristics

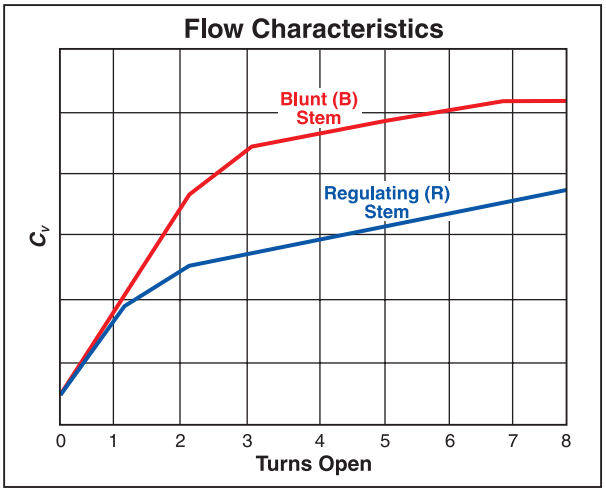

Dimensions / Flow Data

Model Shown: 4Z-U6LB-T-SS

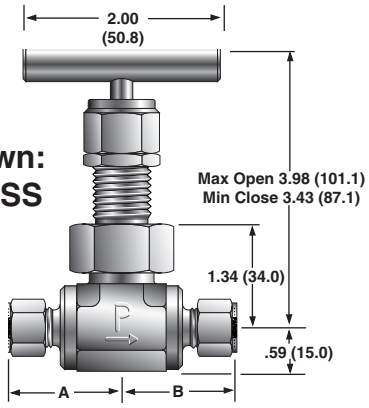

( ) Denotes dimensions in millimeters

Model Shown: 4F-U6AR-T-SS

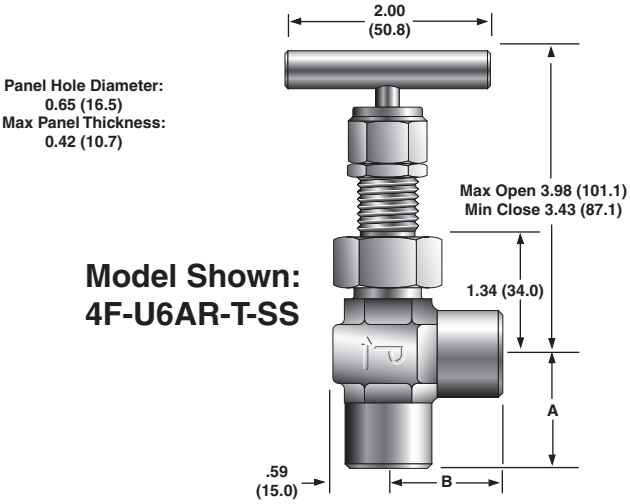

Basic Part Number		End Connections		Stem Type	Flow Data						Dimensions
					Orifice		Inline		Angle		A† and B†
Inline	Angle	Inlet (Port 1)	Outlet (Port 2)		Inch	mm	C_V	X_T*	C_V	X_T*	Inch (mm)
4A-U6LR-T-SS	4A-U6AR-T-SS	1/4" Compression A-LOK®		Regulating	0.177	4.5	0.53	0.80	0.70	0.67	1.38
4A-U6LB-T-SS	4A-U6AB-T-SS			Blunt			0.65	0.48	0.86	0.40	(35.1)
4F-U6LR-T-SS	4F-U6AR-T-SS	1/4" Female NPT		Regulating	0.228	5.8	0.78	0.95	1.04	0.80	1.03
4F-U6LB-T-SS	4F-U6AB-T-SS			Blunt			0.82	0.59	1.09	0.50	(26.2)
4W-U6LR-T-SS	4W-U6AR-T-SS	1/4" Socket Weld		Regulating	0.177	4.5	0.53	0.80	0.70	0.67	.91
4W-U6LB-T-SS	4W-U6AB-T-SS			Blunt			0.65	0.48	0.86	0.40	(23.1)
4Z-U6LR-T-SS	4Z-U6AR-T-SS	1/4" Compression CPI™		Regulating	0.177	4.5	0.53	0.80	0.70	0.67	1.38
4Z-U6LB-T-SS	4Z-U6AB-T-SS			Blunt			0.65	0.48	0.86	0.40	(35.1)
M6A-U6LR-T-SS	M6A-U6AR-T-SS	6mm Compression A-LOK®		Regulating	0.177	4.5	0.53	0.80	0.70	0.67	1.38
M6A-U6LB-T-SS	M6A-U6AB-T-SS			Blunt			0.65	0.48	0.86	0.40	(35.1)
M6Z-U6LR-T-SS	M6Z-U6AR-T-SS	6mm Compression CPI™		Regulating	0.177	4.5	0.53	0.80	0.70	0.67	1.38
M6Z-U6LB-T-SS	M6Z-U6AB-T-SS			Blunt			0.65	0.48	0.86	0.40	(35.1)
M8A-U6LR-T-SS	M8A-U6AR-T-SS	8mm Compression A-LOK®		Regulating	0.177	4.5	0.53	0.80	0.70	0.67	1.38
M8A-U6LB-T-SS	M8A-U6AB-T-SS			Blunt			0.65	0.48	0.86	0.40	(35.1)
M8Z-U6LR-T-SS	M8Z-U6AR-T-SS	8mm Compression CPI™		Regulating	0.177	4.5	0.53	0.80	0.70	0.67	1.38
M8Z-U6LB-T-SS	M8Z-U6AB-T-SS			Blunt			0.65	0.48	0.86	0.40	(35.1)

* Tested in accordance with ISA S75.02. Gas flow will be choked when $P_1 - P_2 / P_1 = X_T$.
† For CPI™ and A-LOK®, dimensions are measured with nuts in the finger tight position.

Dimensions in inches/millimeters are for reference only, subject to change.

Parker Hannifin Corporation
Instrumentation Products Division
Jacksonville, AL USA
http://www.parker.com/ipd

U

Dimensions / Flow Data

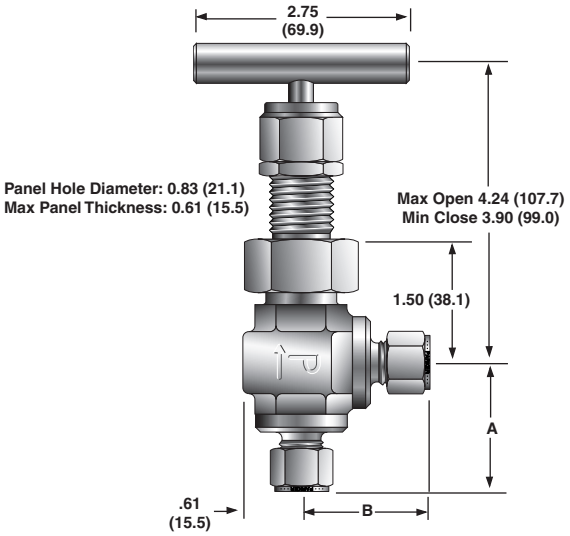

Model Shown: 8A-U12AB-T-SS

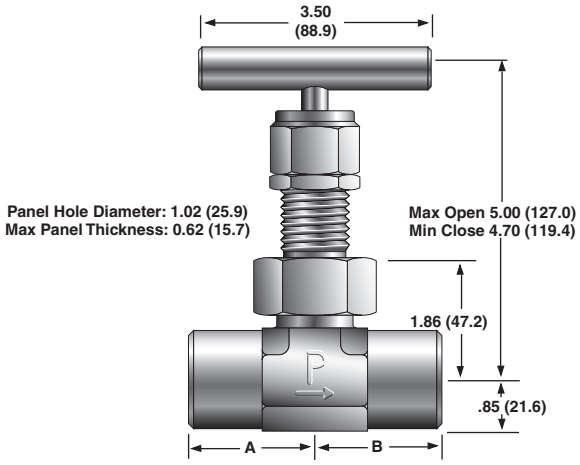

Model Shown: 16F-U16LB-G-SS-HT

( ) Denotes dimensions in millimeters

Basic Part Number		End Connections		Stem Type	Flow Data						Dimensions
		Inlet (Port 1)	Outlet (Port 2)		Orifice		Inline		Angle		A† and B†
Inline	Angle				Inch	mm	C_V	X_T*	C_V	X_T*	Inch (mm)
4F-U12LR-T-SS	4F-U12AR-T-SS	1/4" Female NPT		Regulating	0.250	6.4	0.94	0.65	1.25	0.55	1.13
4F-U12LB-T-SS	4F-U12AB-T-SS			Blunt			1.03	0.60	1.37	0.51	(28.7)
6A-U12LR-T-SS	6A-U12AR-T-SS	3/8" Compression A-LOK®		Regulating	0.187	4.7	0.69	0.61	0.92	0.52	1.60
6A-U12LB-T-SS	6A-U12AB-T-SS			Blunt			0.77	0.50	1.02	0.42	(40.6)
6F-U12LR-T-SS	6F-U12AR-T-SS	3/8" Female NPT		Regulating	0.312	7.9	1.19	0.78	1.58	0.66	1.30
6F-U12LB-T-SS	6F-U12AB-T-SS			Blunt			1.31	0.80	1.74	0.68	(33.0)
6W-U12LR-T-SS	6W-U12AR-T-SS	3/8" Tube Socket Weld		Regulating	0.228	5.8	0.85	0.64	1.13	0.54	1.13
6W-U12LB-T-SS	6W-U12AB-T-SS			Blunt			0.94	0.57	1.25	0.48	(28.7)
6Z-U12LR-T-SS	6Z-U12AR-T-SS	3/8" Compression CPI™		Regulating	0.187	4.7	0.69	0.61	0.92	0.52	1.60
6Z-U12LB-T-SS	6Z-U12AB-T-SS			Blunt			0.77	0.50	1.02	0.42	(40.6)
8A-U12LR-T-SS	8A-U12AR-T-SS	1/2" Compression A-LOK®		Regulating	0.250	6.4	0.94	0.65	1.25	0.55	1.49
8A-U12LB-T-SS	8A-U12AB-T-SS			Blunt			1.03	0.60	1.37	0.51	(37.8)
8F-U12LR-T-SS	8F-U12AR-T-SS	1/2" Female NPT		Regulating	0.312	7.9	1.19	0.78	1.58	0.66	1.50
8F-U12LB-T-SS	8F-U12AB-T-SS			Blunt			1.31	0.80	1.74	0.68	(38.1)
8W-U12LR-T-SS	8W-U12AR-T-SS	1/2" Tube Socket Weld		Regulating	0.312	7.9	1.19	0.78	1.58	0.66	1.25
8W-U12LB-T-SS	8W-U12AB-T-SS			Blunt			1.31	0.80	1.74	0.68	(31.8)
8Z-U12LR-T-SS	8Z-U12AR-T-SS	1/2" Compression CPI™		Regulating	0.250	6.4	0.94	0.65	1.25	0.55	1.49
8Z-U12LB-T-SS	8Z-U12AB-T-SS			Blunt			1.03	0.60	1.37	0.51	(37.8)
M10A-U12LR-T-SS	M10A-U12AR-T-SS	10mm Compression A-LOK®		Regulating	0.250	6.4	0.94	0.65	1.25	0.55	1.53
M10A-U12LB-T-SS	M10A-U12AB-T-SS			Blunt			1.03	0.60	1.37	0.51	(38.9)
M10Z-U12LR-T-SS	M10Z-U12AR-T-SS	10mm Compression CPI™		Regulating	0.250	6.4	0.94	0.65	1.25	0.55	1.53
M10Z-U12LB-T-SS	M10Z-U12AB-T-SS			Blunt			1.03	0.60	1.37	0.51	(38.9)
M12A-U12LR-T-SS	M12A-U12AR-T-SS	12mm Compression A-LOK®		Regulating	0.312	7.9	1.19	0.78	1.58	0.66	1.70
M12A-U12LB-T-SS	M12A-U12AB-T-SS			Blunt			1.31	0.80	1.74	0.68	(43.2)
M12Z-U12LR-T-SS	M12Z-U12AR-T-SS	12mm Compression CPI™		Regulating	0.312	7.9	1.19	0.78	1.58	0.66	1.70
M12Z-U12LB-T-SS	M12Z-U12AB-T-SS			Blunt			1.31	0.80	1.74	0.68	(43.2)

* Tested in accordance with ISA S75.02. Gas flow will be choked when $P_1 - P_2 / P_1 = X_T$.
† For CPI™ and A-LOK®, dimensions are measured with nuts in the finger tight position.

Dimensions in inches/millimeters are for reference only, subject to change.

Parker Hannifin Corporation
Instrumentation Products Division
Jacksonville, AL USA
http://www.parker.com/ipd

Dimensions / Flow Data

Basic Part Number		End Connections		Stem Type	Flow Data						Dimensions
		Inlet (Port 1)	Outlet (Port 2)		Orifice		Inline		Angle		A† and B†
Inline	Angle				Inch	mm	C_V	X_T*	C_V	X_T*	Inch (mm)
8A-U16LR-T-SS	8A-U16AR-T-SS	1/2" Compression A-LOK®		Regulating	0.394	10.0	1.59	0.73	2.11	0.62	1.97
8A-U16LB-T-SS	8A-U16AB-T-SS			Blunt			1.90	0.95	2.53	0.81	(50.0)
8F-U16LR-T-SS	8F-U16AR-T-SS	1/2" Female NPT		Regulating	0.437	11.1	1.82	0.72	2.42	0.61	1.56
8F-U16LB-T-SS	8F-U16AB-T-SS			Blunt			2.67	0.80	3.55	0.68	(39.6)
8PSW-U16LR-T-SS	8PSW-U16AR-T-SS	1/2" Pipe Socket Weld		Regulating	0.437	11.1	1.82	0.72	2.42	0.61	1.56
8PSW-U16LB-T-SS	8PSW-U16AB-T-SS			Blunt			2.67	0.80	3.55	0.68	(39.6)
8W-U16LR-T-SS	8W-U16AR-T-SS	1/2" Tube Socket Weld		Regulating	0.394	10.0	1.59	0.73	2.11	0.62	1.69
8W-U16LB-T-SS	8W-U16AB-T-SS			Blunt			1.90	0.95	2.53	0.81	(42.9)
8Z-U16LR-T-SS	8Z-U16AR-T-SS	1/2" Compression CPI™		Regulating	0.394	10.0	1.59	0.73	2.11	0.62	1.97
8Z-U16LB-T-SS	8Z-U16AB-T-SS			Blunt			1.90	0.95	2.53	0.81	(50.0)
12A-U16LR-T-SS	12A-U16AR-T-SS	3/4" Compression A-LOK®		Regulating	0.437	11.1	1.82	0.72	2.42	0.61	1.97
12A-U16LB-T-SS	12A-U16AB-T-SS			Blunt			2.67	0.80	3.55	0.68	(50.0)
12F-U16LR-T-SS	12F-U16AR-T-SS	3/4" Female NPT		Regulating	0.437	11.1	1.82	0.72	2.42	0.61	1.63
12F-U16LB-T-SS	12F-U16AB-T-SS			Blunt			2.67	0.80	3.55	0.68	(41.4)
12PSW-U16LR-T-SS	12PSW-U16AR-T-SS	3/4" Pipe Socket Weld		Regulating	0.437	11.1	1.82	0.72	2.42	0.61	1.56
12PSW-U16LB-T-SS	12PSW-U16AB-T-SS			Blunt			2.67	0.80	3.55	0.68	(39.6)
12W-U16LR-T-SS	12W-U16AR-T-SS	3/4" Tube Socket Weld		Regulating	0.437	11.1	1.82	0.72	2.42	0.61	1.56
12W-U16LB-T-SS	12W-U16AB-T-SS			Blunt			2.67	0.80	3.55	0.68	(39.6)
12Z-U16LR-T-SS	12Z-U16AR-T-SS	3/4" Compression CPI™		Regulating	0.437	11.1	1.82	0.72	2.42	0.61	1.97
12Z-U16LB-T-SS	12Z-U16AB-T-SS			Blunt			2.67	0.80	3.55	0.68	(50.0)
16A-U16LR-T-SS	16A-U16AR-T-SS	1" Compression A-LOK®		Regulating	0.437	11.1	1.82	0.72	2.42	0.61	1.97
16A-U16LB-T-SS	16A-U16AB-T-SS			Blunt			2.67	0.80	3.55	0.68	(50.0)
16F-U16LR-T-SS	16F-U16AR-T-SS	1" Female NPT		Regulating	0.437	11.1	1.82	0.72	2.42	0.61	1.81
16F-U16LB-T-SS	16F-U16AB-T-SS			Blunt			2.67	0.80	3.55	0.68	(46.0)
16Z-U16LR-T-SS	16Z-U16AR-T-SS	1" Compression CPI™		Regulating	0.437	11.1	1.82	0.72	2.42	0.61	1.97
16Z-U16LB-T-SS	16Z-U16AB-T-SS			Blunt			2.67	0.80	3.55	0.68	(50.0)
M12A-U16LR-T-SS	M12A-U16AR-T-SS	12mm Compression A-LOK®		Regulating	0.394	10.0	1.59	0.73	2.11	0.62	1.97
M12A-U16LB-T-SS	M12A-U16AB-T-SS			Blunt			1.90	0.95	2.53	0.81	(50.0)
M12Z-U16LR-T-SS	M12Z-U16AR-T-SS	12mm Compression CPI™		Regulating	0.394	10.0	1.59	0.73	2.11	0.62	1.97
M12Z-U16LB-T-SS	M12Z-U16AB-T-SS			Blunt			1.90	0.95	2.53	0.81	(50.0)

* Tested in accordance with ISA S75.02. Gas flow will be choked when $P_1 - P_2 / P_1 = X_T$.
† For CPI™ and A-LOK®, dimensions are measured with nuts in the finger tight position.

Dimensions in inches/millimeters are for reference only, subject to change.

How to Order Options

Grafoil™ Packing - replace **-T** with **-G** for 700ºF Temperature capability.

High Temperature - Add the suffix **-HT** for 1200ºF Temperature capability. **Example :** 4M-U6LB-G-SS**-HT**

Oxygen Cleaning - Add the suffix -**C3**. **Example:** 8A-U12LR-T-SS**-C3.**

ASME B31.1 Compliant Valves – Add the suffix **-QC311. Example:** 8F-U12LR-G-SS-QC311

How to Order Maintenance Kits

Stainless Steel T-Bar Handles with Handle Screw – **Examples:** U16-BAR-HANDLE-SS

Aluminum T-Bar Handles with Handle Screw – **Examples:** U12-BAR-HANDLE-AL

Panel Mounting Nuts – **Examples:** U6-LOCKNUT

PTFE Packing Kits – **Example:** KIT-U12-T

Grafoil® Packing Kits – **Example:** KIT-U16-G

Grafoil® is a registered trademark GrafTech International Holdings, Inc.

Parker Hannifin Corporation
Instrumentation Products Division
Jacksonville, AL USA
http://www.parker.com/ipd

Introduction

Parker VQ Series Toggle Valves are the right combination of performance and value for manual or pneumatic on-off control in moderate pressure and temperature applications. The manual version employs a toggle handle for quick action at pressures up to 300 psig (21 bar). Compact double acting, normally closed, and normally open pneumatically actuated versions of this valve are ideal for automatic control at pressures up to 600 psig (41 bar).

Toggle Valve Features

- Quick acting
- Inline and angle patterns
- CPI™, A-LOK®, male and female NPT connections
- Panel mountable
- Color-coded handles
- 316 stainless steel and brass body construction
- Optional Stem seal materials - See HTO
- Optional handle positioners and anti-lock handles
- Available in normally open, normally closed, and double acting models
- Mounting bracket standard
- 100% factory tested

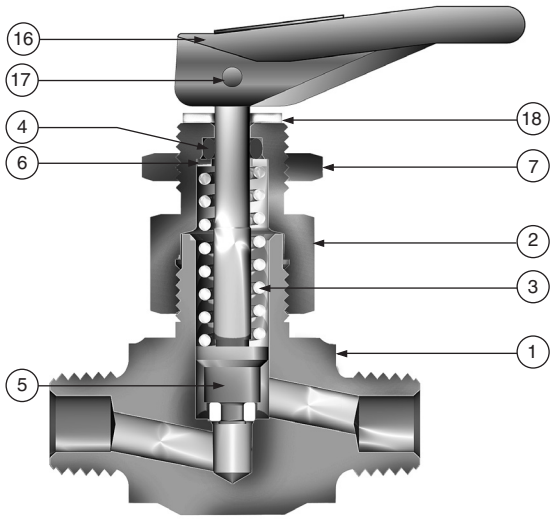

Toggle Valve Specifications

Pressure Rating at All Temperatures:

Manual	300 psig (21 bar) CWP
Actuated N.C. V4Q	600 psig (41 bar) CWP
Actuated N.C. V6Q	500 psig (35 bar) CWP
Actuated N.O & D.A.	450 psig (31 bar) CWP

Temperature Ratings:

PTFE Stem Tip: -20°F to 200°F (-29°C to 93°C)
PCTFE Stem Tip: -65°F to 200°F (-54°C to 93°C)

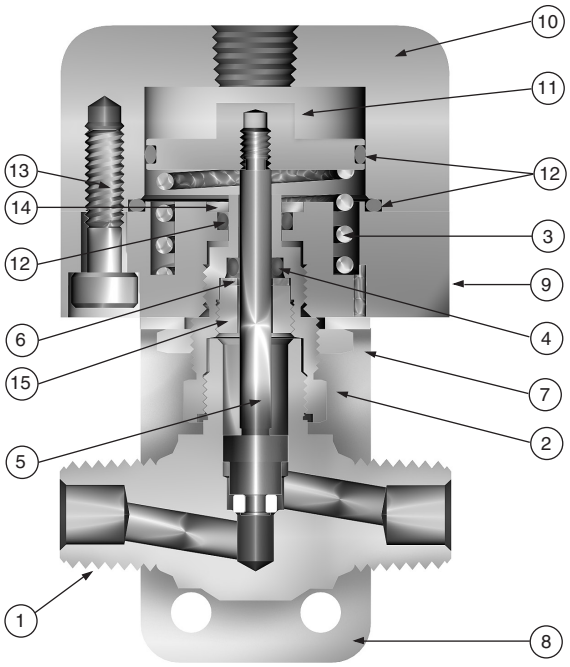

Materials of Construction

Item #	Description	Stainless Steel	Brass
1	Body	ASTM A 182 Type F316	ASTM B 283 Alloy C37700
2	Cap	ASTM A 479 Type 316	ASTM B 453 Alloy C34000
3	Spring*	Stainless Steel	Stainless Steel
4	Stem Seal**	Fluorocarbon Rubber	Fluorocarbon Rubber
5	Stem	ASTM A 276 Type 316	ASTM A 276 Type 316
6	Stem Washer	Stainless Steel	Stainless Steel
7	Panel/Lock Nut	316 Stainless Steel	316 Stainless Steel
8	Mounting Bracket	Aluminum	Aluminum
9	Actuator Base	Aluminum	Aluminum
10	Actuator Cap	Aluminum	Aluminum
11	Piston	Aluminum	Aluminum
12	Actuator Seals	Fluorocarbon Rubber	Fluorocarbon Rubber
13	Screws	Stainless Steel	Stainless Steel
14	Actuator Bushing	Aluminum	Aluminum
15	Stem Bushing***	ASTM A 479 Type 316	ASTM A 479 Type 316
16	Handle	Nylon 6/6	Nylon 6/6
17	Handle Pin	Stainless Steel	Stainless Steel
18	Handle Washer	Acetal	Acetal

* Spring not used on Double Acting (11AD) models
** Optional stem seal materials available - See How to Order
*** Stem Bushing not used on Normally Closed (11AC) models
Lubrication: Perfluorinated polyether

Parker Hannifin Corporation
Instrumentation Products Division
Jacksonville, AL USA
http://www.parker.com/ipd

Pneumatically Actuated Valves

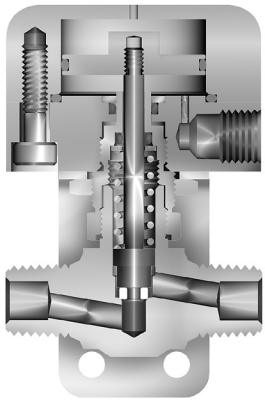

Normally Closed (11AC)

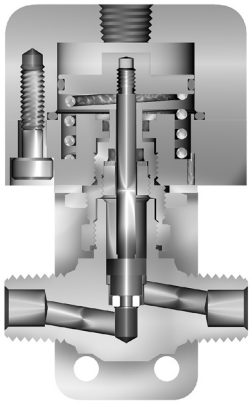

Normally Open (11AO)

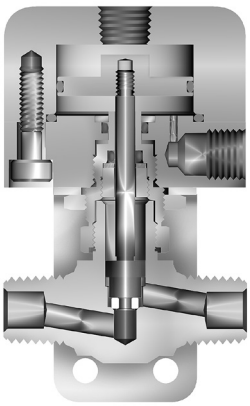

Double Acting (11AD)

VQ

Minimum Actuating Pressures

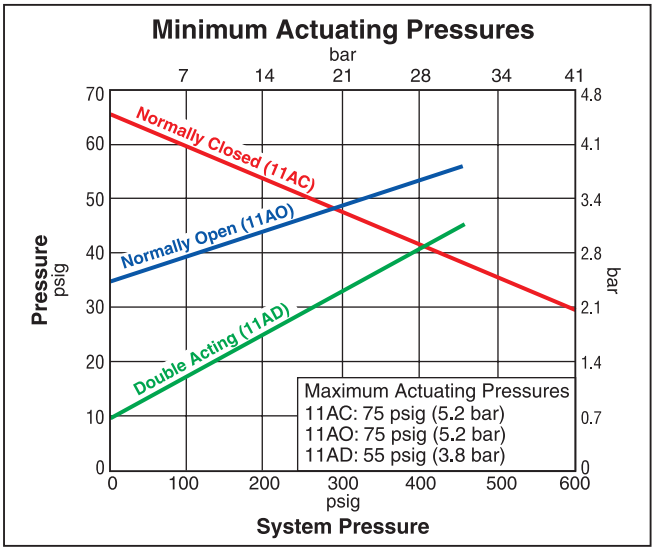

Toggle Valve Mounting Bracket

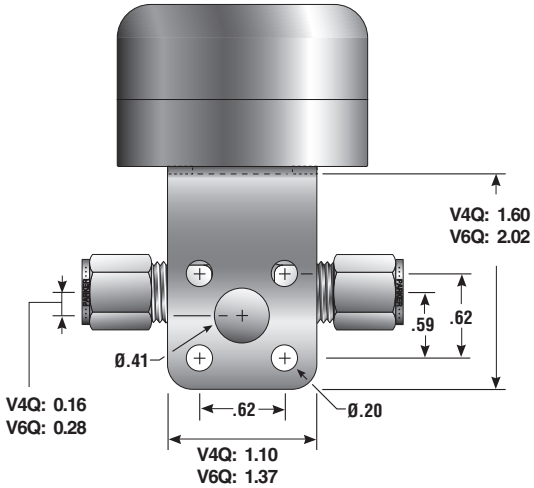

Parker Hannifin Corporation
Instrumentation Products Division
Jacksonville, AL USA
http://www.parker.com/ipd

VQ

Dimensions / Flow Data

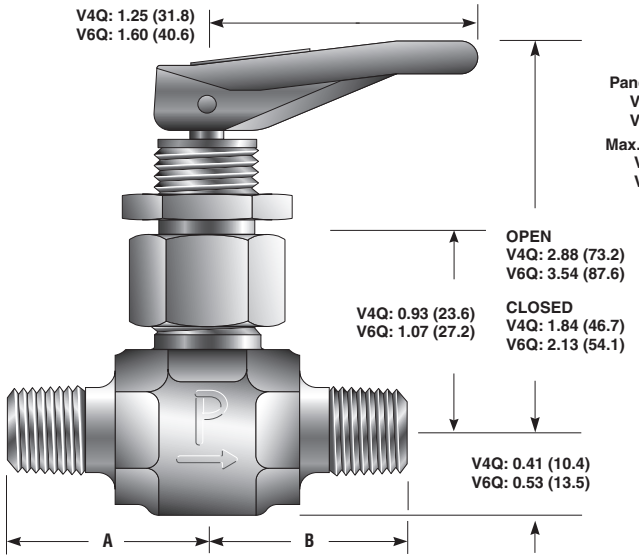

Model Shown: 4M-V4LQ-SSP

( ) Denotes dimensions in millimeters

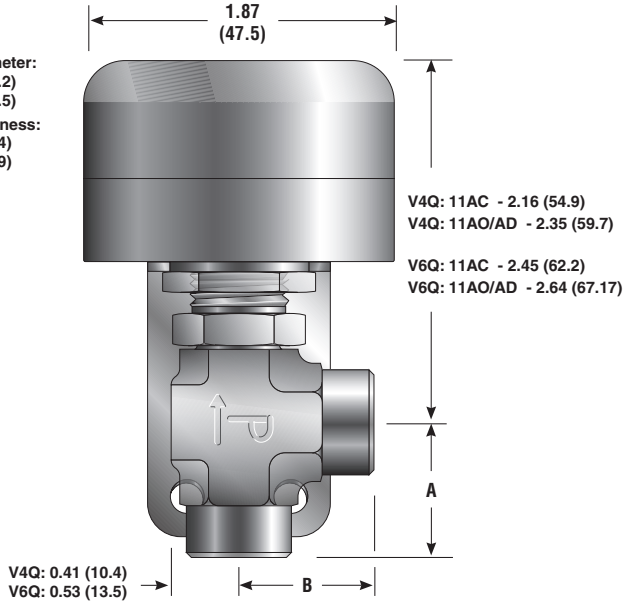

Model Shown: 4F-V6AQ-11AO-B

Dimensions / Flow Data

Basic Part Number	End Connections		Flow Data				Dimensions	Additional Options			
	Inlet (Port 1)	Outlet (Port 2)	Orifice Inch	Orifice mm	C_V	X_T*	A† and B† Inch (mm)	Stem Tip	Stem Seal	Actuation	Body Material
2A-V4LQ-SSP	1/8" Compression A-LOK®		0.078	2.0	0.14	0.52	1.10 (27.9)	K = PCTFE	BN = Nitrile Rubber	11AC = Normally Closed	BP = Brass with Panel Nut
2A-V4AQ-SSP					0.15	0.50					
2F-V4LQ-SSP	1/8" Female NPT		0.176	4.5	0.36	0.71	0.8 (20.6)		EPR = Ethylene Propylene Rubber	11AO = Normally Opened	
2F-V4AQ-SSP					0.49	0.64					
2M-V4LQ-SSP	1/8" Male NPT		0.125	3.2	0.30	0.50	0.81 (20.6)				
2M-V4AQ-SSP					0.35	0.55					
2Z-V4LQ-SSP	1/8" Compression CPI™		0.078	2.0	0.14	0.52	1.10 (27.9)				
2Z-V4AQ-SSP					0.15	0.50					
4A-V4LQ-SSP	1/4" Compression A-LOK®		0.176	4.5	0.36	0.71	1.15 (29.2)		KZ = Highly Fluorinated Fluocarbon Rubber	11AD = Double Acting	
4A-V4AQ-SSP					0.49	0.64					
4M-V4LQ-SSP	1/4" Male NPT		0.176	4.5	0.36	0.71	0.94 (23.9)				
4M-V4AQ-SSP					0.49	0.64					
4Z-V4LQ-SSP	1/4" Compression CPI™		0.176	4.5	0.36	0.71	1.15 (29.2)				
4Z-V4AQ-SSP					0.49	0.64					
M6A-V4LQ-SSP	6mm Compression A-LOK®		0.176	4.5	0.36	0.71	1.13 (28.7)				
M6A-V4AQ-SSP					0.49	0.64					
M6Z-V4LQ-SSP	6mm Compression CPI™		0.176	4.5	0.36	0.71	1.13 (28.7)				
M6Z-V4AQ-SSP					0.49	0.64					
M8A-V4LQ-SSP	8mm Compression A-LOK®		0.176	4.5	0.36	0.71	1.13 (28.7)				
M8A-V4AQ-SSP					0.49	0.64					
M8Z-V4LQ-SSP	8mm Compression CPI™		0.176	4.5	0.36	0.71	1.13 (28.7)				
M8Z-V4AQ-SSP					0.49	0.64					

* Tested in accordance with ISA S75.02. Gas flow will be choked when $P_1 - P_2 / P_1 = X_T$.
† For CPI™ and A-LOK®, dimensions are measured with nuts in the finger tight position.

Dimensions in inches/millimeters are for reference only, subject to change.

Parker Hannifin Corporation
Instrumentation Products Division
Jacksonville, AL USA
http://www.parker.com/ipd

Dimensions / Flow Data

Basic Part Number	End Connections		Flow Data				Dimensions	Additional Options			
	Inlet (Port 1)	Outlet (Port 2)	Orifice		C_V	X_T*	A† and B†	Stem Tip	Stem Seal	Actuation	Body Material
			Inch	mm			Inch (mm)				
4F-V6LQ-SSP	1/4" Female NPT		0.250	6.4	0.83	0.70	1.00 (25.4)	K = PCTFE	BN = Nitrile Rubber	11AC = Normally Closed	BP = Brass with Panel Nut
4F-V6AQ-SSP					0.92	0.68					
6A-V6LQ-SSP	3/8" Compression A-LOK®		0.250	6.4	0.83	0.70	1.29 (32.8)		EPR = Ethylene Propylene Rubber	11AO = Normally Opened	
6A-V6AQ-SSP					0.92	0.68					
6Z-V6LQ-SSP	3/8" Compression CPI™		0.250	6.4	0.83	0.70	1.29 (32.8)				
6Z-V6AQ-SSP					0.92	0.68					
8A-V6LQ-SSP	1/2" Compression A-LOK®		0.250	6.4	0.83	0.70	1.37 (34.8)				
8A-V6AQ-SSP					0.92	0.68					
8Z-V6LQ-SSP	1/2" Compression CPI™		0.250	6.4	0.83	0.70	1.37 (34.8)		KZ = Highly Fluorinated Fluocarbon Rubber	11AD = Double Acting	
8Z-V6AQ-SSP					0.92	0.68					
M10A-V6LQ-SSP	10mm Compression A-LOK®		0.250	6.4	0.83	0.70	1.30 (33.0				
M10A-V6AQ-SSP					0.92	0.68					
M10Z-V6LQ-SSP	10mm Compression CPI™		0.250	6.4	0.83	0.70	1.30 (33.0)				
M10Z-V6AQ-SSP					0.92	0.68					

* Tested in accordance with ISA S75.02. Gas flow will be choked when $P_1 - P_2 / P_1 = X_T$.
† For CPI™ and A-LOK®, dimensions are measured with nuts in the finger tight position.

Dimensions in inches/millimeters are for reference only, subject to change.

VQ

How to Order Toggle Valves

The part number sequence identifies product characteristics as shown in the example below.

Example : 4F-V6AQK-BN-11AC-B describes a V6Q Series pneumatically actuated (normally closed) angle pattern valve equipped with 1/4" Female NPT inlet and outlet ports, PCTFE Stem Tip, Nitrile Stem Seal, Brass construction with a mounting bracket.

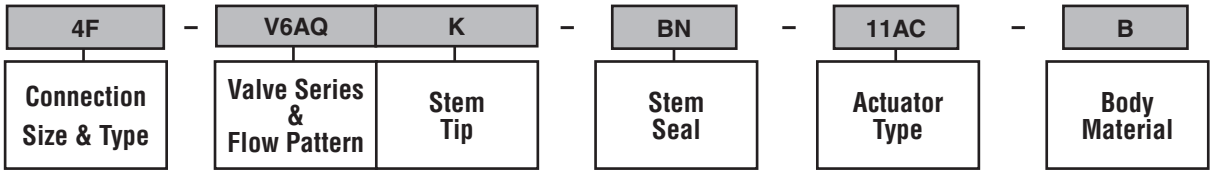

Oxygen Cleaning – Add the suffix **-C3** to the end of the part number to receive valves cleaned in accordance with ASTM G93 level C, class 500. This ASTM details cleaning methods and cleanliness levels for materials and equipment used in oxygen-enriched environments. **Example:** 4A-V4AQ-EPR-SSP**-C3**

How to Order Maintenance Kits

Colored Nylon Handles with Handle Pin – Options are BLUE, GREEN or RED. **Example:** V4Q-HANDLE-BLUE

Handle Positioners – Prevents handle from rotating. **Examples:** Q6-HANDLE-POSITIONER

Anti Locking Handle – **Example:** V4Q-HANDLE-BLACK-ALH

Rubber Seal and Stem Kits – **Example:** KIT-V6Q-BN

Parker Hannifin Corporation
Instrumentation Products Division
Jacksonville, AL USA
http://www.parker.com/ipd

NP6 Series Needle Valves

Introduction

Parker NP6 Needle Valves are designed with packing below the stem threads and a two-piece stem. The packing below the threads protects the flow stream from thread lubricant contamination or washout and also protects the stem threads from potential damaging effects of the media. The two-piece stem produces a non-rotating lower stem for superior, repeatable sealing and reduced packing wear.

Features

- Packing below power threads protects thread lubricants from media and isolates the media from the lubricant for severe service applications
- O-ring dust seal in bonnet protects stem threads from external contamination
- Choice of two non-rotating stem types:
  R-Stem – All metal, blunt stem tip
  K-Stem – PCTFE stem tip
- Non rotating lower stem extends packing and valve life
- 316 stainless steel construction
- Inline and angle patterns
- Wide variety of US Customary and SI ports
- Panel mountable
- 100% factory tested
- Optional color coded handles

Specifications

Pressure Rating:
6000 psig (414 bar) CWP

Temperature Rating:

PTFE Packing:
-65°F to 450°F (-54°C to 232°C)

PCTFE:
-65°F to 350°F (-54°C to 177°C)

Nitrile Rubber:
-30°F to 250°F (-34°C to 121°C)

Ethylene Propylene Rubber:
-70°F to 275°F (-57°C to 135°C)

Fluorocarbon Rubber:
-15°F to 400°F (-26°C to 204°C)

Grafoil®:
-70°F to 700°F (-57°C to 371°C)

Materials of Construction

Item #	Description	Material
1	Body	ASTM A 182 Type F316
2	Packing Nut	ASTM A 479 Type 316
3	Lower Stem (R-Stem)	ASTM A 276 Type 316
3	Lower Stem (K-Stem)	ASTM A 276 Type 316, with PCTFE
4	Upper Stem	ASTM A 276 Type 316
5	Packing Gland	ASTM A 276 Type 316
6	Packing*	PTFE
7	Packing Washer	Stainless Steel
8	Handle**	Nylon 6/6, with SS Insert
9	Handle Screw	Stainless Steel
10	Packing Nut Screw	Stainless Steel
11	Dust Seal	Fluorocarbon Rubber
12	Panel Nut	316 Stainless Steel

* Optional elastomeric stem seals and Grafoil® packing are available - See How to Order.
** Handles for Grafoil® packed valves are aluminum T-bars.
Lubrication: Perfluorinated polyether

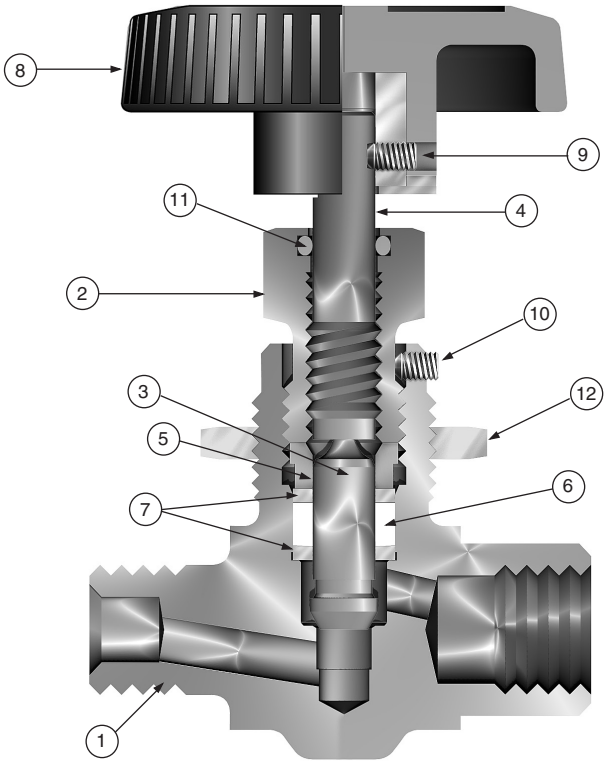

Grafoil® is a registered trademark of GrafTech International Holdings, Inc.

Parker Hannifin Corporation
Instrumentation Products Division
Jacksonville, AL USA
http://www.parker.com/ipd

Dimensions / Flow Data

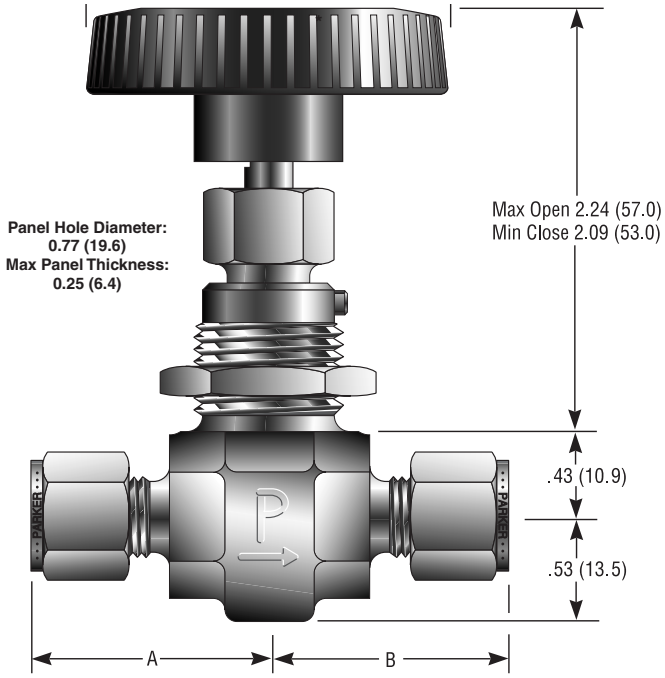

Model Shown: 4Z-NP6LK-SSP

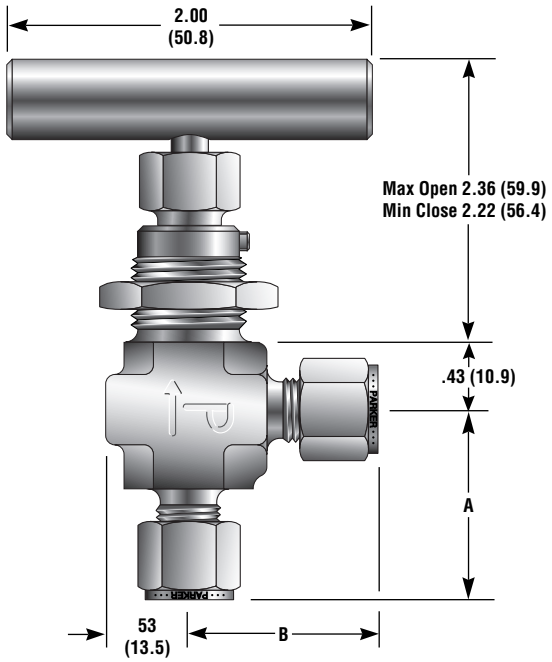

Model Shown: 4Z-NP6AR-G-SSP

* Note: Handle diameter for R Stem NP6 Series Valves is 1.81 (46.0)

( ) Denotes dimensions in millimeters

Basic Part Number		End Connections		Stem Type	Flow Data						Dimensions
					Orifice		Inline		Angle		A† and B†
Inline	Angle	Inlet (Port 1)	Outlet (Port 2)		Inch	mm	C_V	X_T*	C_V	X_T*	Inch mm
4A-NP6LR-SSP	4A-NP6AR-SSP	1/4" Compression A-LOK®		Blunt	0.177	4.5	0.60	0.50	0.67	0.39	1.20
4A-NP6LK-SSP	4A-NP6AK-SSP			PCTFE			0.51	0.55	0.65	0.52	(30.5)
4F-NP6LR-SSP	4F-NP6AR-SSP	1/4" Female NPT		Blunt	0.177	4.5	0.60	0.50	0.67	0.39	1.00
4F-NP6LK-SSP	4F-NP6AK-SSP			PCTFE			0.51	0.55	0.65	0.52	(25.4)
4M-NP6LR-SSP	4M-NP6AR-SSP	1/4" Male NPT		Blunt	0.177	4.5	0.60	0.50	0.67	0.39	1.03
4M-NP6LK-SSP	4M-NP6AK-SSP			PCTFE			0.51	0.55	0.65	0.52	(26.2)
4Z-NP6LR-SSP	4Z-NP6AR-SSP	1/4" Compression CPI™		Blunt	0.177	4.5	0.60	0.50	0.67	0.39	1.20
4Z-NP6LK-SSP	4Z-NP6AK-SSP			PCTFE			0.51	0.55	0.65	0.52	(30.5)
6A-NP6LR-SSP	6A-NP6AR-SSP	3/8" Compression A-LOK®		Blunt	0.177	4.5	0.60	0.50	0.67	0.39	1.23
6A-NP6LK-SSP	6A-NP6AK-SSP			PCTFE			0.51	0.55	0.65	0.52	(31.2)
6Z-NP6LR-SSP	6Z-NP6AR-SSP	3/8" Compression CPI™		Blunt	0.177	4.5	0.60	0.50	0.67	0.39	1.23
6Z-NP6LK-SSP	6Z-NP6AK-SSP			PCTFE			0.51	0.55	0.65	0.52	(31.2)
M6A-NP6LR-SSP	M6A-NP6AR-SSP	6mm Compression A-LOK®		Blunt	0.177	4.5	0.60	0.50	0.67	0.39	1.16
M6A-NP6LK-SSP	M6A-NP6AK-SSP			PCTFE			0.51	0.55	0.65	0.52	(29.5)
M6Z-NP6LR-SSP	M6Z-NP6AR-SSP	6mm Compression CPI™		Blunt	0.177	4.5	0.60	0.50	0.67	0.39	1.16
M6Z-NP6LK-SSP	M6Z-NP6AK-SSP			PCTFE			0.51	0.55	0.65	0.52	(29.5)
M8A-NP6LR-SSP	M8A-NP6AR-SSP	8mm Compression A-LOK®		Blunt	0.177	4.5	0.60	0.50	0.67	0.39	1.24
M8A-NP6LK-SSP	M8A-NP6AK-SSP			PCTFE			0.51	0.55	0.65	0.52	(31.5)
M8Z-NP6LR-SSP	M8Z-NP6AR-SSP	8mm Compression CPI™		Blunt	0.177	4.5	0.60	0.50	0.67	0.39	1.24
M8Z-NP6LK-SSP	M8Z-NP6AK-SSP			PCTFE			0.51	0.55	0.65	0.52	(31.5)

* Tested in accordance with ISA S75.02. Gas flow will be choked when $P_1 - P_2 / P_1 = X_T$.

† For CPI™ and A-LOK®, dimensions are measured with nuts in the finger tight position.

Dimensions in inches/millimeters are for reference only, subject to change.

Parker Hannifin Corporation
Instrumentation Products Division
Jacksonville, AL USA
http://www.parker.com/ipd

Pressure vs. Temperature

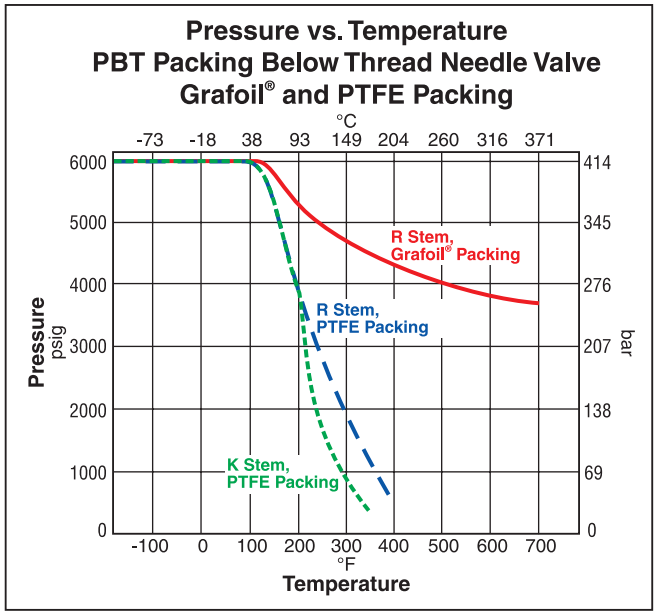

Note: To determine MPa, multiply bar by 0.1

Flow Characteristics

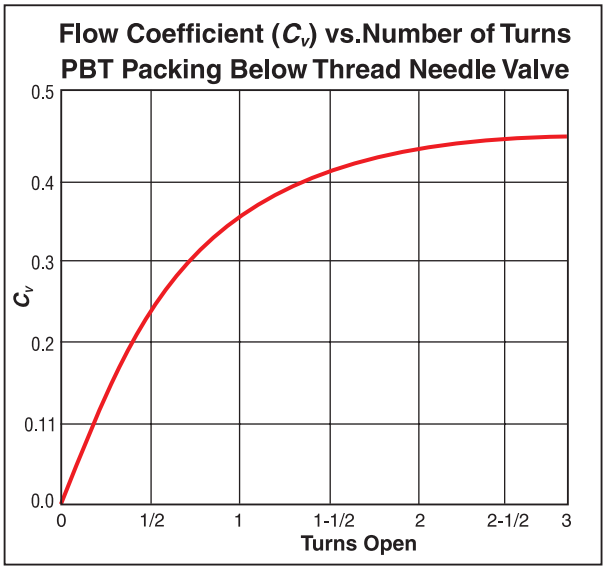

Note: When combining seat and seal materials, the most restrictive temperature rating becomes the limiting factor on temperature range.

NP6

How to Order

The part number sequence identifies product characteristics as shown in the example below
.

Example: 4Z-NP6AK-BN-SSP describes an angle pattern NP6 Series needle valve equipped with 1/4" CPI™ compression inlet and outlet ports, a PCTFE tipped stem, Nitrile seals, and stainless steel construction with panel mounting nut.

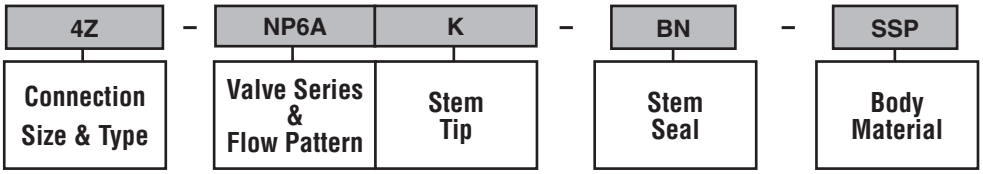

How to Order Options

Optional Stem Seals - Standard is PTFE (No Designator) Options include **-BN** (Nitrile Rubber), **-EPR** (Ethylene Propylene Rubber), **-V** (Fluorocarbon Rubber) or **-G** (Grafoil®). **Example:** 4M-NP6LR**-G**-SSP

Oxygen Cleaning – Add the suffix **-C3** to the end of the part number to receive valves cleaned in accordance with ASTM G93 level C, class 500. This ASTM details cleaning methods and cleanliness levels for materials and equipment used in oxygen-enriched environments. **Example:** M6A-NP6AK-EPR-SS**-C3**

Parker Hannifin Corporation
Instrumentation Products Division
Jacksonville, AL USA
http://www.parker.com/ipd

Notes

Parker Hannifin Corporation
Instrumentation Products Division
Jacksonville, AL USA
http://www.parker.com/ipd

Introduction

Parker compact SN6 Needle Valves provide shut-off and coarse regulation of liquids and gases utilized in process and instrumentation applications. These rugged valves are manufactured from stainless steel barstock and are integral bonnet designs with packing above the stem threads.

Features

- Integral bonnet design
- 316 stainless steel construction
- Choice of two stem types:
  R-Stem – All metal, blunt stem tip
  K-Stem – PCTFE stem tip
- Choice of PTFE or Grafoil® packing
- Inline and angle patterns
- 100% factory tested

Materials of Construction

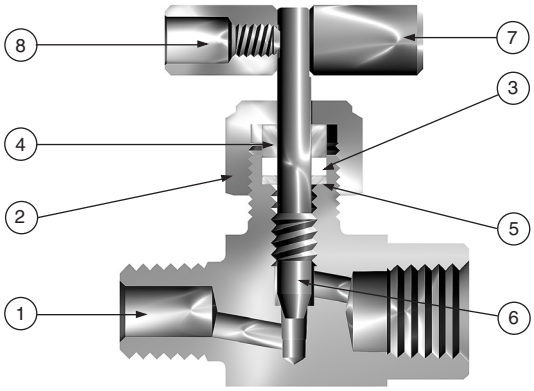

Model Shown:
4F4M-SN6LR-SS

Item #	Description	Material
1	Body	ASTM A 182 Type 316
2	Packing Nut	ASTM A 479 Type 316
3	Packing*	PTFE
4	Packing Gland	ASTM A 276 Type 316
5	Packing Washer	Stainless Steel
6	Stem (R-Stem)	ASTM A 276 Type 316
7	Stem (K-Stem)	ASTM A 276 Type 316, with PCTFE
8	Handle**	Aluminum
9	Handle Screw	Stainless Steel

* Optional Grafoil® packing available - See How to Order.
** Handles for Grafoil® packed valves and valves with R stem types are stainless steel T-bars.
Lubrication: Perfluorinated polyether.
Grafoil® is a registered trademark of GrafTech International Holdings, Inc.

Specifications

Pressure Rating:
R Stem: 6000 psig (414 bar) CWP
K Stem: 3000 psig (207 bar) CWP

Temperature Rating:

PTFE Packing:
-65°F to 450°F (-54°C to 232°C)

PCTFE Stem Tip:
-65°F to 350°F (-54°C to 177°C)

Grafoil® (G) Packing:
-65°F to 700°F (-54°C to 371°C)

Pressure Rating and Tubing Selection

For working pressures of A-LOK® and CPI™ tube connections, please see the Instrument Tubing Selection Guide (Bulletin 4200-TS), found in the Technical Section of the Parker Instrumentation Process Control Binder, or the Parker Instrument Tube Fitting Installation Manual (Bulletin 4200-B4).

For working pressures of valves with external or internal pipe threads, please see Catalog 4260, Instrumentation Pipe Fittings.

Pressure vs. Temperature

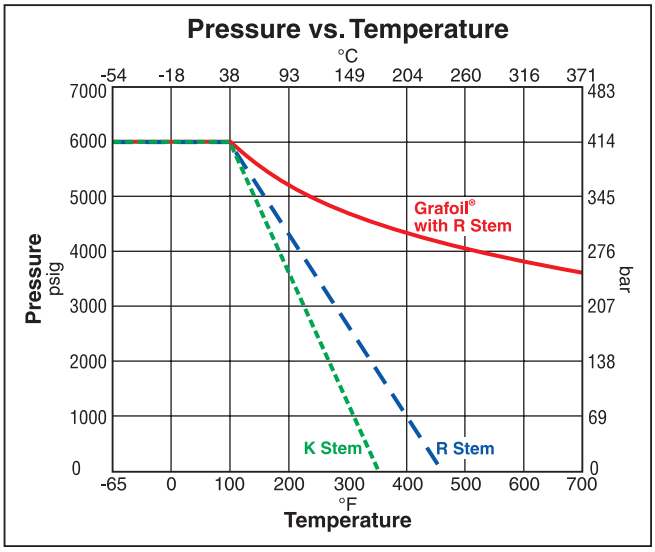

Notes:
To determine MPa, multiply bar by 0.1
When combining seat and seal materials, the most restrictive temperature rating becomes the limiting factor on temperature range.

Parker Hannifin Corporation
Instrumentation Products Division
Jacksonville, AL USA
http://www.parker.com/ipd

Dimensions / Flow Data

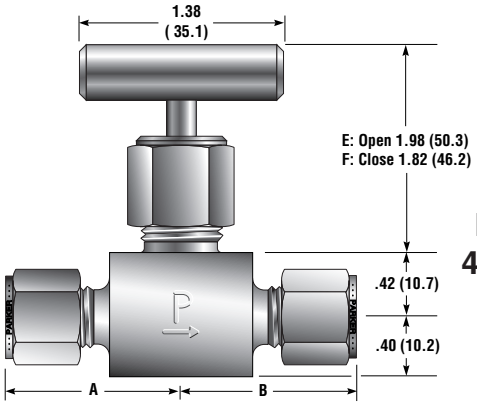

Model Shown: 4Z-SN6LR-G-SS

Model Shown: 4M-SN6AK-SS

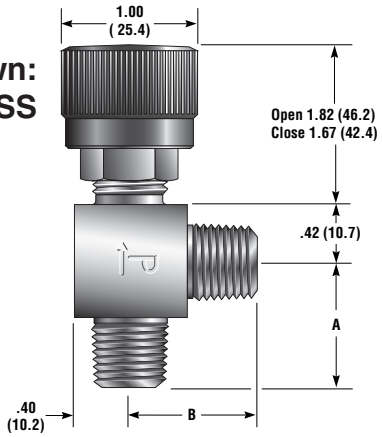

Body width = .80 (20.3)
( ) Denotes dimensions in millimeters

Basic Part Number		End Connections		Stem Type	Flow Data						Dimensions			
					Orifice		Inline		Angle		A†		B†	
Inline	Angle	Inlet (Port 1)	Outlet (Port 2)		Inch	mm	C_V	X_T*	C_V	X_T*	Inch	mm	Inch	mm
4A-SN6LR-SS	4A-SN6AR-SS	1/4" Compression A-LOK®		Blunt	0.125	3.2	0.29	0.56	0.34	0.55	1.17	29.7	1.17	29.7
4A-SN6LK-SS	4A-SN6AK-SS			PCTFE			0.23	0.63	0.27	0.58				
4F-SN6LR-SS	4F-SN6AR-SS	1/4" Female NPT		Blunt	0.125	3.2	0.29	0.56	0.34	0.55	0.94	23.9	0.94	23.9
4F-SN6LK-SS	4F-SN6AK-SS			PCTFE			0.23	0.63	0.27	0.58				
4M-SN6LR-SS	4M-SN6AR-SS	1/4" Male NPT		Blunt	0.125	3.2	0.29	0.56	0.34	0.55	0.99	25.1	0.99	25.1
4M-SN6LK-SS	4M-SN6AK-SS			PCTFE			0.23	0.63	0.27	0.58				
4Z-SN6LR-SS	4Z-SN6AR-SS	1/4" Compression CPI™		Blunt	0.125	3.2	0.29	0.56	0.34	0.55	1.17	29.7	1.17	29.7
4Z-SN6LK-SS	4Z-SN6AK-SS			PCTFE			0.23	0.63	0.27	0.58				
4M4F-SN6LR-SS	4M4F-SN6AR-SS	1/4" Male NPT	1/4" Female NPT	Blunt	0.125	3.2	0.29	0.56	0.34	0.55	0.99	25.1	0.94	23.9
4M4F-SN6LK-SS	4M4F-SN6AK-SS			PCTFE			0.23	0.63	0.27	0.58				

* Tested in accordance with ISA S75.02. Gas flow will be choked when $P_1 - P_2 / P_1 = X_T$.
† For CPI™ and A-LOK®, dimensions are measured with nuts in the finger tight position.

Dimensions in inches/millimeters are for reference only, subject to change.

SN6

How to Order

The part number sequence identifies product characteristics as shown in the example.

Example: 4Z-SN6LR-SS describes an SN6 valve, inline, blunt stem, 316 SS, 1/4" CPI™ tube inlet and outlet ports, and a PTFE packing.

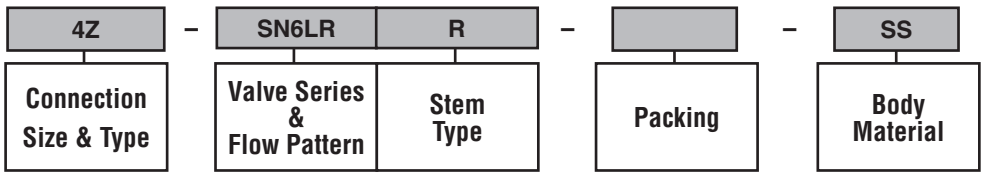

Note: Handles: SN6 valves with R-Stem are standard with 316 SS T-bar handles. SN6 valves with K-Stem are standard with round anodized aluminum handles, 1.00 inch diameter. SN6 valves are not panel mountable.

Optional Packing – Standard is PTFE (No designator). Add **-G** (Grafoil) temperature ratings to 700ºF.
Example: 4F-SN6LR-**G**-SS

Grafoil® is a registered trademark of GrafTech International Holdings, Inc.

Parker Hannifin Corporation
Instrumentation Products Division
Jacksonville, AL USA
http://www.parker.com/ipd

PV Series Rising Stem Plug Valves

Introduction

Parker Rising Plug and Gauge/Root Valves are available with a variety of seat and seal materials. They are screwed bonnet designs featuring bonnet lock plates. The PV and PVG Series of valves provide a straight-through flow path in two orifice sizes. The valves utilize a non-wetted upper stem and a non-rotating lower stem in conjunction with a tapered seat for positive shut-off and long seat life, even in particulated media.

Features

- Bi-directional flow
- Roddable, straight through flow path
- Bonnet lock plate resists accidental bonnet disengagement
- Stem dust seal helps protect stem from external contamination
- Inlet side optional outlet – PVG 1/4" Female NPT – PVG 1/2" Female NPT
- Rugged 316 stainless steel barstock construction
- Panel mounting option
- Gauge port option
- 100% factory tested

Specifications

Pressure Rating:

Acetal Seat (DE): 6000 psig (414 bar) CWP
PEEK Seat (PK): 6000 psig (414 bar) CWP
PCTFE Seat (K): 2200 psig (152 bar) CWP
PFA Seat (PFA): 750 psig (52 bar) CWP

Temperature Rating:

Seats –

Acetal:
-20°F to 250°F (-29°C to 121°C)
PEEK and PFA:
-20°F to 400°F (-29°C to 204°C)
PCTFE:
-20°F to 200°F (-29°C to 93°C)

Stem Seals –

Nitrile Rubber (BN), Silicone Rubber (SI), and Ethylene Propylene Rubber (EPR):
-20°F to 250°F (-29°C to 121°C)
Fluorocarbon Rubber (V):
-20°F to 400°F (-29°C to 204°C)
Highly Fluorinated Fluorocarbon Rubber (KZ):
-20°F to 200°F (-29°C to 93°C)

Flow Data

PV4: $C_V = 0.95$; $x_T = 0.43$; Orifice = 0.188" (4.8mm)
PV8: $C_V = 2.01$; $x_T = 0.33$; Orifice = 0.250" (6.4mm)

Tested in accordance with ISA S75.02. Gas flow will be choked when $P_1 - P_2 / P_1 = x_T$.

Materials of Construction

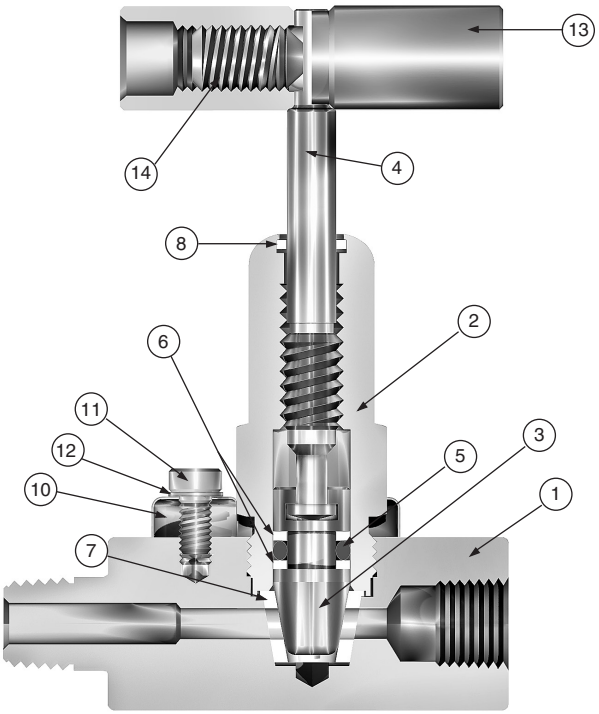

Model Shown:
4M4F-PV4DE-BN-SS

Item #	Description	Material
1	Body	ASTM A 479 Type 316
2	Bonnet	ASTM A 479 Type 316
3	Lower Stem	ASTM A 276 Type 316
4	Upper Stem	ASTM A 564 Type 316
5	Stem Seal*	Fluorocarbon Rubber
6	Back-up Rings	PTFE
7	Seat*	Acetal
8	Dust Seal	PTFE
9	Seat Pin (not shown)	Stainless Steel
10	Lock Plate	Stainless Steel
11	Lock Plate Screw	Stainless Steel
12	Lock Washer	Stainless Steel
13	Handle	Stainless Steel
14	Handle Screw	Stainless Steel

* Optional elastomeric O-ring stem seals and polymer seat materials are available - See How to Order.
Lubrication: Perfluorinated polyether

Parker Hannifin Corporation
Instrumentation Products Division
Jacksonville, AL USA
http://www.parker.com/ipd

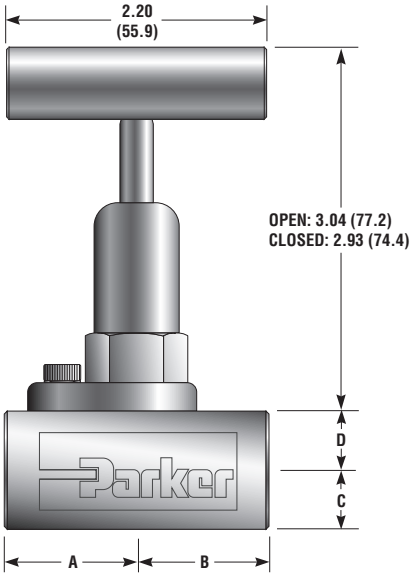

Model Shown: 4F-PV4DE-V-SS

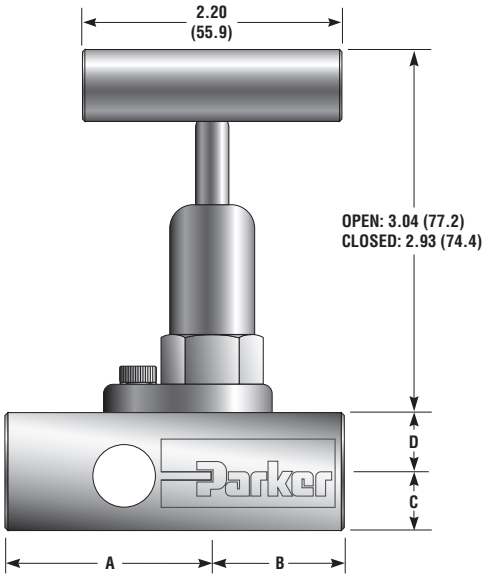

Model Shown: 4F-PVG4PK-EPR-SS

( ) Denotes dimensions in millimeters

Dimensions

Basic Part Number	End Connection Inlet (Port 1) X Outlet (Port 2)		Dimensions A† Inch	A† mm	B† Inch	B† mm	C Inch	C mm	D Inch	D mm
4A-PV4DE-V-SS	1/4" Compression A-LOK®		1.73	43.9	1.73	43.9	0.50	12.7	0.50	12.7
4F-PV4DE-V-SS	1/4" Female NPT		1.13	28.7	1.13	28.7	0.50	12.7	0.50	12.7
4F-PVG4DE-V-SS	1/4" Female NPT		1.75	44.5	1.13	28.7	0.50	12.7	0.50	12.7
4M4F-PV4DE-V-SS	1/4" Male NPT	1/4" Female NPT	1.78	45.2	1.13	28.7	0.50	12.7	0.50	12.7
4Z-PV4DE-V-SS	1/4" Compression CPI™		1.73	43.9	1.73	43.9	0.50	12.7	0.50	12.7
6A-PV4DE-V-SS	3/8" Compression A-LOK®		1.79	45.5	1.79	45.5	0.50	12.7	0.50	12.7
6Z-PV4DE-V-SS	3/8" Compression CPI™		1.79	45.5	1.79	45.5	0.50	12.7	0.50	12.7
8M4F-PV4DE-V-SS	1/2" Male NPT	1/4" Female NPT	1.90	48.3	1.13	28.7	0.50	12.7	0.50	12.7
8M4F-PVG4DE-V-SS	1/2" Male NPT	1/4" Female NPT	3.13	79.5	1.75	44.5	0.50	12.7	0.50	12.7
6M6F-PVG8DE-V-SS	3/8" Male NPT	3/8" Female NPT	3.33	84.6	2.25	57.2	0.56	14.2	0.56	14.2
8A-PV8DE-V-SS	1/2" Compression A-LOK®		1.91	48.5	1.91	48.5	0.56	14.2	0.56	14.2
8F-PV8DE-V-SS	1/2" Female NPT		1.33	33.8	1.33	33.8	0.56	14.2	0.56	14.2
8M8F-PV8DE-V-SS	1/2" Male NPT	1/2" Female NPT	2.17	55.1	1.33	33.8	0.56	14.2	0.56	14.2
8M8F-PVG8DE-V-SS	1/2" Male NPT	1/2" Female NPT	3.33	84.6	2.25	57.2	0.56	14.2	0.56	14.2
8Z-PV8DE-V-SS	1/2" Compression CPI™		1.91	48.5	1.91	48.5	0.56	14.2	0.56	14.2
12M8F-PV8DE-V-SS	3/4" Male NPT	1/2" Female NPT	2.17	55.1	1.33	25.4	0.56	14.2	0.56	14.2

† For CPI™ and A-LOK®, dimensions are measured with nuts in the finger tight position.

Dimensions in inches/millimeters are for reference only, subject to change.

Parker Hannifin Corporation
Instrumentation Products Division
Jacksonville, AL USA
http://www.parker.com/ipd

Pressure vs. Temperature

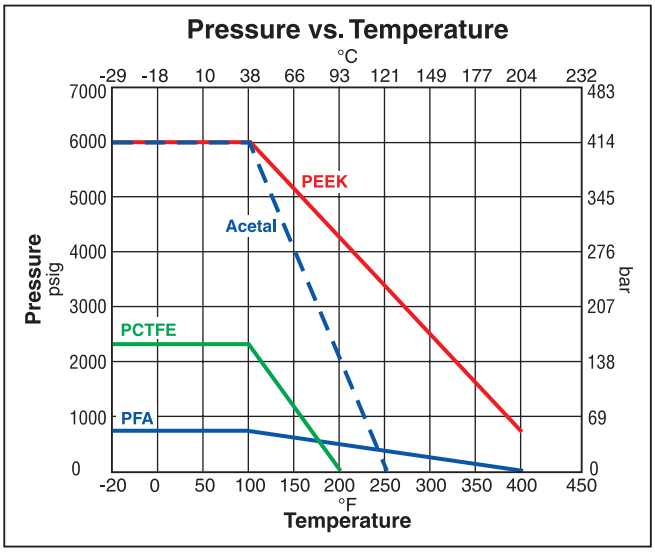

Flow Characteristics

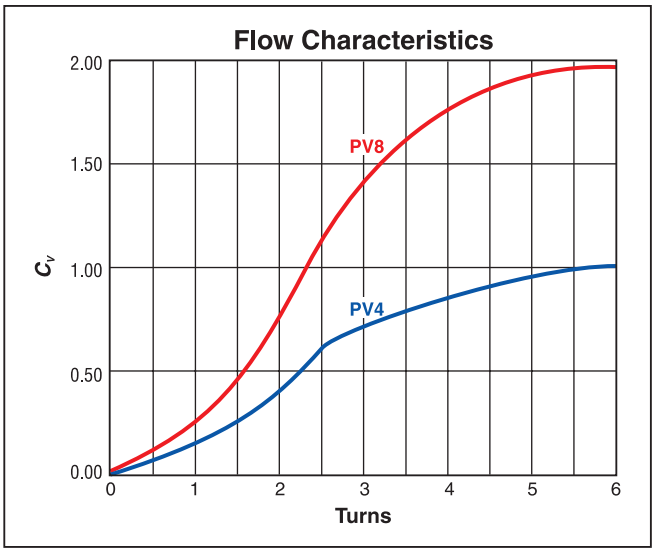

How to Order

PV

The part number sequence identifies product characteristics as shown in the example below.

Example : 4Z-PV4K-BN-SS describes a PV4 Series rising stem plug valve equipped with 1/4" CPI™ compression inlet and outlet ports, a PCTFE seat, Nitrile stem seals, and stainless steel construction.

4Z	–	PV4	K	–	BN	–	SS
Connection Size & Type		Valve Series	Seat Type		Stem Seal Material		Body Material

Optional Seat Materials - K (PCTFE), PK (PEEK) or PFA (PFA). **Example: 4F-PV4PK-V-SS**

Optional Seal Materials - BN (Nitrile Rubber), SI (Silicone Rubber), EPR (Ethylene Propylene Rubber, KZ (Highly Fluorinated Fluorocarbon Rubber). **Example: 4Z-PV4PFA-KZ-SS**

Optional Panel Mounting - Example: 4Z-PV4DE-V-SSP

Parker Hannifin Corporation
Instrumentation Products Division
Jacksonville, AL USA
http://www.parker.com/ipd

MAN Series Needle Valves with MPI™ Style Connections

Pressures to 15,000 psi (1034 bar)

Parker MAN series needle valves with MPI™ tube connections are designed for multi-turn control of liquid or gas media with regulation or shutoff options for pressures up to 15,000 psi. This Double Ferrule connection delivers fast, easy make-up and reliable bubble-tight performance in either liquid or gas service. Valves are built for MPI™ tube sizes from 1/4" to 1" and include five different body patterns providing many control options.

Features:

- Valve flow capabilities closely match associated tubing bore sizes
- CW 316 Stainless Steel Material is Standard, 2507 Annealed Super Duplex as option
- Rising stem/barstock body design
- Non-rotating stem prevents stem/seat galling
- Metal-to-metal seating achieves bubble-tight shut-off, longer stem/seat life in abrasive flow, greater durability for repeated on/off cycles, unmatched temperature performance and excellent corrosion resistance
- Temperature range from -423°F (-252°C) to 1000°F (538°C)
- Standard PTFE packing provides dependable stem and body sealing from -423°F to 450°F, additional options include PTFE/Glass (25%) for temperatures to 600°F and Graphite Yarn for temperatures to 1000°F
- Choice of Vee (shutoff) or Regulating Flow Stem Tips
- Replaceable Seat Option available with Right Angle 2-way body style
- Optional N-Dura Stem and Seat Coating or Stellite material option for severe service available

MAN Series Needle Valve with MPI Connections

Parker MPI™ Connection Benefits:

MPI™ Connections are designed for both liquids and gases. They can be used on MPI™ 1/8th Hard tubing, Autoclave Engineers Medium Pressure Tubing, or Thick Wall Instrumentation Tubing in both 316 SS and 2507 Super Duplex materials.

- **Suparcase® Technology** creates a Corrosion Resistant Ferrule set for a strong, mechanical hold
- **Double Ferrule** design is proven but not interchangeable with standard tube fittings
- **Longer Thread Engagement** improves resistance to pressure and load on ferrules
- **Molybdenum Disulfide Coated Gland Nut** prevents galling and makes assembly easier.

MAN Series Needle Valve Extreme Temperature shown with "**-VT**" (Vent) option

MPI

Parker Hannifin Corporation
Instrumentation Products Division
Jacksonville, AL USA
http://www.parker.com/ipd

MAN Series Medium Pressure Needle Valves

(Replaces MPN Series Valves)

Standard packing materials allow service temperatures from -100°F (-73°C) to 450°F (232°C), optional materials service from -423°F (-252°C) to 1000°F (538°C). Critical service design features include packing below the stem thread and the non-rotating stem design ensures longer life in rugged conditions. MPI™ valves are available in two materials, CW 316 SS and 2507 Super Duplex.

MPI™ Medium Pressure Valve Connection Designation

Valve Connection	Description	Drawing
MP7	Parker MPI™ (Medium Pressure Inverted) To 15,000 PSI	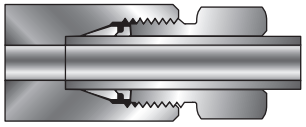

Selections "F" NPT Valves and "MF" Medium Pressure C&T Valves from previous MPI™ catalog are now supplied from the Parker Autoclave Engineers product catalogs: "P" Series and "20SM" Series Needle Valve brochures.

Material of Construction

Item#	Description	Material
1	Low Friction Packing Gland	Ampco 45
2	Panel Mount Option	316 SS
❸	Packing Washer	Ampco 45
❹	Bottom Washer	316 SS
5	Valve Body	316 SS
6	Pan Head Screw 10-24 x 1/4"	18-8 SS
❼	Metal to Metal Seating	316 SS
❽	Adjustable Packing	PTFE
9	One Piece Stem	316 SS
10	Locking Device	302 SS
11	Powder Coated Handle	316 SS
⓬	Stem Sleeve	304 SS
⓭	Hex Nuts	300 Series SS
⓮	Thrust Washer	17-4PH
●	Replaceable Seat (version only)	17-4PH

❶ Typical spare parts found in Repair Kit

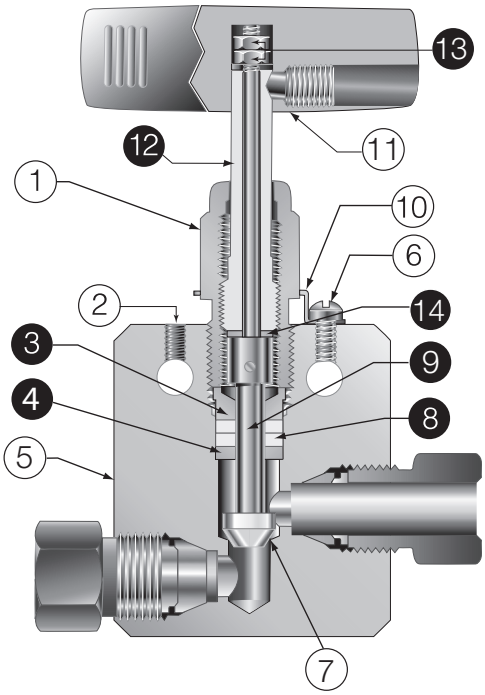

Inlet is typically under the seat (from left side in drawing above) however valve can be used bi-directionally. Inlet is shown to keep pressure trapped under seat in closed position (preferred).

Panel Hole Sizes

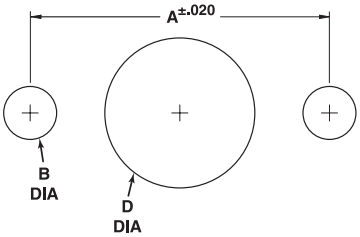

Needle Valve Panel Mount

	Inches			
Valve Size	**A**	**B**	**Screw Size**	**D**
4 & 6	1.25	.22	10 - 24	.75
8 & 9	1.375	.22	10 - 24	1.00
12	1.75	.22	10 - 24	1.12
16	2.50	.22	10 - 24	1.62

Parker Hannifin Corporation
Instrumentation Products Division
Jacksonville, AL USA
http://www.parker.com/ipd

Two Way Inline Valves

Generalized Flow Coefficient Curves (C_V)

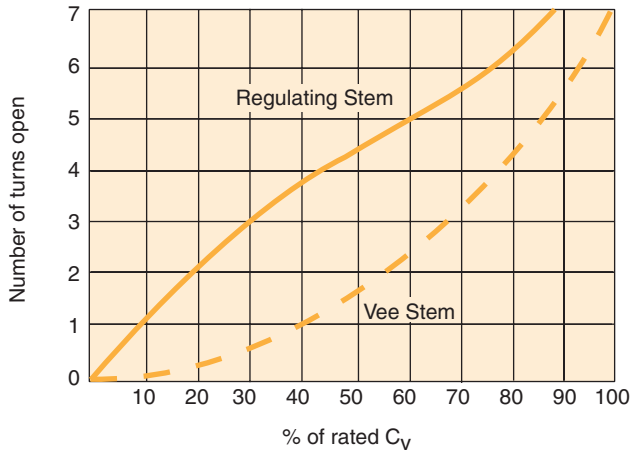

Basic Repair Kits (316 SS)

Pick Repair Kit by matching size ie; R4 = 1/4", and add packing/temp/material suffix if other than standard 316SS & PTFE (T)

Repair kits for LB, AB, XBI, XBO (V-Stem Versions)
R4MANB, R6MANB, R8MANB, R9MANB, R12MANB, R16MANB

Repair kits for LR, AR, XRI, XRO (Regulating-Stem Versions)
R4MANR, R6MANR, R8MANR, R9MANR, R12MANR, R16MANR

Repair kits for XBD 3-way 2-stem Valves (V-Stem versions)
R4MANXBD, R6MANXBD, R8MANXBD, R9MANXBD, R12MANXBD, R16MANXBD

Repair kits for XRD 3-way 2-stem Valves (Regulating-Stem versions)
R4MANXRD, R6MANXRD, R8MANXRD, R9MANXRD, R12MANXRD, R16MANXRD

Repair kits for ABR 2-way Replaceable Seat Valves (V-Stem versions)
R4MANABR, R6MANABR, R8MANABR, R9MANABR, R12MANABR, R16MANABR

Repair kits for ARR 2-way Replaceable Seat Valves (Regulating-Stem versions)
R4MANARR, R6MANARR, R8MANARR, R9MANARR, R12MANARR, R16MANARR

Consult your Parker representative for other material kit numbers, and pricing. Visit www.autoclave.com for product Operation manuals.

How to Order MAN Series Needle Valves

The correct part number is easily derived from the following example and ordering chart. The eight product characteristics required are coded as shown in the chart.

The following example describes an MAN Series needle valve with 1/4" MPI™ connections, 2 way angle flow path, blunt (VEE) stem, PTFE packing, a stainless steel body and the option for cryogenic trim materials

Typical part number example: **4MP7-MANAB-T-SS-LTB** (part number is created based on customer selection of product parameters, see below for example)

4	MP7	-	MAN	A	B	-	T	-	SS	-	LTB
Inlet/Outlet Connection Size	Connection Type		Valve Series	Valve Type	Stem Type		Packing Material		Body Material		Options
4 = 1/4" **6** = 3/8" **8** = 1/2" **9** = 9/16" **12** = 3/4" **16** = 1"	**MP7** = Parker MPI™		**MAN**	**L** = 2 Way Inline **A** = 2 Way Angle **X***I** = 3 Way, 2 Pressure Connections **X***D** = 3 Way, 2 Stem Connection **A***R** = 2 Way Angle (replaceable seat) **X***O** = 3 Way, 1 Pressure Connection (*** Insert Stem Type)	**B** = Blunt (Vee) **R** = Regulating		**T** = PTFE (Standard) **TG** = PTFE Glass (use with **HYG** option) **GY** = Graphite Yarn		**SS** = Stainless Steel **2507** = Super Duplex		**LTB** = Cryogenic (-100° to 0°F) **LT**= Low Temp. Ext. (-100 to -423°F) **HT**= High Temp. Ext. (800° to 1000°F) **PM**= Panel Mount **HYG**= Hydrogen/Helium Service **XF**= High Strength Ferrules (sizes 12 & 16 only) **LD**= Lockout Device (clamshell)

Extreme Temperature Options:

Standard valves using PTFE packing (code "T") may be operated from -100°F (-73°C) to 450°F (232°C). High and Cryogenic temperature packing and/or extended stuffing box are available for service from -423°F (-252°C) to 1000°F (538°C) by adding the following suffixes to catalog order number: (Note: Use code "T" packing with "LTB" and "LT" Cryogenic options)

-LTB = Standard valve with Cryogenic trim materials and PTFE packing to -100°F (-73°C)

-LT = Extended stuffing box valve with PTFE packing and Cryogenic trim materials to -423°F (-252°C) (adds 3.5" to overall height of valve) use when temperature is below -100°F

-TG = Standard valve with PTFE-Glass packing from -100°F (-73°C) to 600°F (316°C)

-GY = Standard valve with Graphite Braided Yarn packing to 800°F (427°C). Use when selecting HT option.

(Note: 3/4" valve rated 8000 psi (552 bar) and 1" rated 6000 psi (412 bar) max with Graphite Yarn packing)

-HT = Extended stuffing box valve with Graphite Braided Yarn packing to 1000°F (538°C) (adds 3.5" to overall height of valve) use when temperature exceeds 800°F

Parker Hannifin Corporation
Instrumentation Products Division
Jacksonville, AL USA
http://www.parker.com/ipd

Two Way Inline Valves

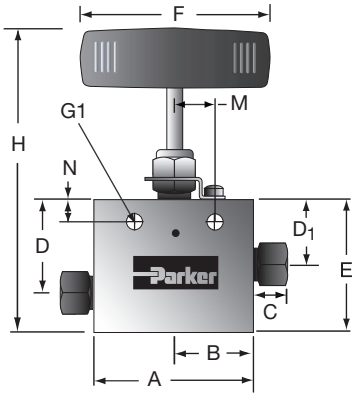

Notes:

G1 = Bracket mounting hole size

H = Dimension with stem in closed position

Panel Mount Template and drill sizes on Page 34

Rated Cv 2-Way (Inline)	
4MP7	0.31
6MP7	0.75
8MP7	1.3
9MP7	1.75
12MP7	2.8
16MP7	5.2

Parker Part No.	PSI	Connection	Inches												
			Orifice	A	B	C	D	D1	E	F	G1	H	M	N	Block Thick.
4MP7-MANLB-T-SS	15,000	1/4" MPI	.125	2.50	1.25	0.50	1.63	1.19	2.13	3.00	0.22	4.60	0.63	0.38	1.00
6MP7-MANLB-T-SS	15,000	3/8" MPI	.219	2.50	1.25	0.63	1.63	1.19	2.13	3.00	0.22	4.60	0.63	0.38	1.00
8MP7-MANLB-T-SS	15,000	1/2" MPI	.312	3.00	1.50	0.69	2.38	1.75	3.00	4.00	0.34	6.00	0.69	0.50	1.38
9MP7-MANLB-T-SS	15,000	9/16" MPI	.359	3.00	1.50	0.75	2.38	1.75	3.00	4.00	0.34	6.00	0.69	0.50	1.38
12MP7-MANLB-T-SS	15,000	3/4" MPI	.516	4.12	2.06	0.88	3.00	2.25	3.75	10.35	0.44	6.92	0.88	0.62	1.75
16MP7-MANLB-T-SS	12,500	1" MPI	.688	4.75	2.38	1.13	3.75	2.81	4.75	10.35	0.56	8.74	1.25	1.13	2.00

For 2507 Super Duplex option, replace **-SS** with **-2507** and use **-XF** ferrule sets for sizes 12 and 16. Dimensions in inches are for reference only, subject to change.

Two Way Angle Valves

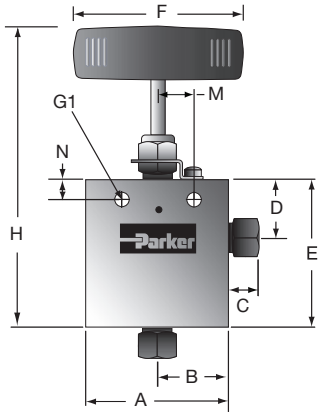

Notes:

G1 = Bracket mounting hole size

H = Dimension with stem in closed position

Panel Mount Template and drill sizes on Page 34

Rated Cv 2-Way (Angle)	
4MP7	0.47
6MP7	1.2
8MP7	1.95
9MP7	2.63
12MP7	4.2
16MP7	7.8

Parker Part No.	PSI	Connection	Inches											
			Orifice	A	B	C	D	E	F	G1	H	M	N	Block Thick.
4MP7-MANAB-T-SS	15,000	1/4" MPI	.125	2.50	1.25	0.50	1.19	2.57	3.00	0.22	5.00	0.63	0.38	1.00
6MP7-MANAB-T-SS	15,000	3/8" MPI	.219	2.50	1.25	0.63	1.19	2.57	3.00	0.22	5.00	5.00	0.38	1.00
8MP7-MANAB-T-SS	15,000	1/2" MPI	.312	3.00	1.50	0.69	1.75	3.58	4.00	0.34	6.60	0.69	0.50	1.38
9MP7-MANAB-T-SS	15,000	9/16" MPI	.359	3.00	1.50	0.75	1.75	3.58	4.00	0.34	6.60	0.69	0.50	1.38
12MP7-MANAB-T-SS	15,000	3/4" MPI	.516	4.12	2.06	0.88	2.25	4.25	10.35	0.44	7.42	0.88	0.62	1.75
16MP7-MANAB-T-SS	12,500	1" MPI	.688	4.75	2.38	1.13	2.81	5.44	10.35	0.56	9.43	1.25	1.13	2.00

For 2507 Super Duplex option, replace **-SS** with **-2507** and use **-XF** ferrule sets for sizes 12 and 16. Dimensions in inches are for reference only, subject to change.

Parker Hannifin Corporation
Instrumentation Products Division
Jacksonville, AL USA
http://www.parker.com/ipd

Three Way/Two Pressure Connections

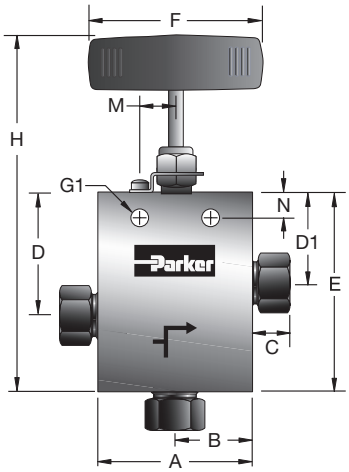

Notes:

G1 = Bracket mounting hole size

H = Dimension with stem in closed position

Panel Mount Template and drill sizes on Page 34

Rated C_V 3-Way/2 on Pressure (Angle)	
4MP7	0.47
6MP7	1.2
8MP7	1.95
9MP7	2.63
12MP7	4.2
16MP7	7.8

Parker Part No.	PSI	Connection	Inches												
			Orifice	A	B	C	D	D1	E	F	G1	H	M	N	Block Thick.
4MP7-MANXBI-T-SS	15,000	1/4" MPI	0.125	2.50	1.25	0.50	1.63	1.19	2.84	3.00	0.22	5.30	0.63	0.38	1.00
6MP7-MANXBI-T-SS	15,000	3/8" MPI	0.219	2.50	1.25	0.63	1.63	1.19	2.84	3.00	0.22	5.30	0.63	0.38	1.00
8MP7-MANXBI-T-SS	15,000	1/2" MPI	0.312	3.00	1.50	0.69	2.38	1.75	3.88	4.00	0.34	6.90	0.69	0.50	1.38
9MP7-MANXBI-T-SS	15,000	9/16" MPI	0.359	3.00	1.50	0.75	2.38	1.75	3.88	4.00	0.34	6.90	0.69	0.50	1.38
12MP7-MANXBI-T-SS	15,000	3/4" MPI	0.516	4.12	2.06	0.88	3.00	2.25	5.00	10.35	0.44	8.17	0.88	0.62	1.75
16MP7-MANXBI-T-SS	12,500	1" MPI	0.688	4.75	2.38	1.13	3.75	2.82	6.38	10.35	0.56	10.37	1.25	1.13	2.00

For 2507 Super Duplex option, replace **-SS** with **-2507** and use **-XF** ferrule sets for sizes 12 and 16. Dimensions in inches are for reference only, subject to change.

Three Way/One Pressure Connections

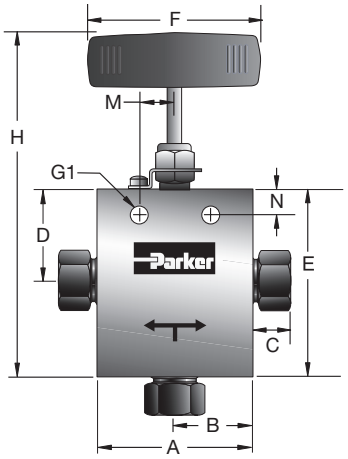

Notes:

G1 = Bracket mounting hole size

H = Dimension with stem in closed position

Panel Mount Template and drill sizes on Page 34

Rated C_V 3-Way/1 on Pressure (Angle)	
4MP7	0.47
6MP7	1.2
8MP7	1.95
9MP7	2.63
12MP7	4.28
16MP7	7.8

Parker Part No.	PSI	Connection	Inches											
			Orifice	A	B	C	D	E	F	G1	H	M	N	Block Thick.
4MP7-MANXBO-T-SS	15,000	1/4" MPI	0.125	2.50	1.25	0.50	1.19	2.57	3.00	0.22	5.00	0.63	0.38	1.00
6MP7-MANXBO-T-SS	15,000	3/8" MPI	0.219	2.50	1.25	0.63	1.19	2.57	3.00	0.22	5.00	5.00	0.38	1.00
8MP7-MANXBO-T-SS	15,000	1/2" MPI	0.312	3.00	1.50	0.69	1.75	3.63	4.00	0.34	6.60	0.69	0.50	1.38
9MP7-MANXBO-T-SS	15,000	9/16" MPI	0.359	3.00	1.50	0.75	1.75	3.63	4.00	0.34	6.60	0.69	0.50	1.38
12MP7-MANXBO-T-SS	15,000	3/4" MPI	0.516	4.12	2.06	0.88	2.25	4.25	10.35	0.44	7.42	0.88	0.62	1.75
16MP7-MANXBO-T-SS	12,500	1" MPI	0.688	4.75	2.38	1.13	2.81	5.44	10.35	0.56	9.43	1.25	1.13	2.00

For 2507 Super Duplex option, replace **-SS** with **-2507** and use **-XF** ferrule sets for sizes 12 and 16. Dimensions in inches are for reference only, subject to change.

Parker Hannifin Corporation
Instrumentation Products Division
Jacksonville, AL USA
http://www.parker.com/ipd

Three Way/Two Stem Connections

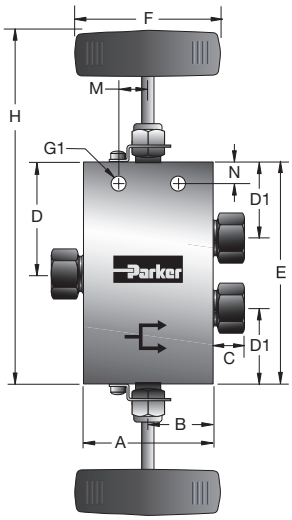

Notes:

G1 = Bracket mounting hole size

H = Dimension with stem in closed position

Panel Mount Template and drill sizes on Page 34

Rated Cv 3-Way/2 Stem Manifold (Inline)	
4MP7	0.31
6MP7	0.75
8MP7	1.3
9MP7	1.75
12MP7	2.8
16MP7	5.2

Parker Part No.	PSI	Connection	Inches												
			Orifice	A	B	C	D	D1	E	F	G1	H	M	N	Block Thick.
4MP7-MANXBD-T-SS	15,000	1/4" MPI	0.125	2.50	1.25	0.50	1.69	1.19	3.38	3.00	0.22	5.84	0.63	0.38	1.00
6MP7-MANXBD-T-SS	15,000	3/8" MPI	0.219	2.50	1.25	0.63	1.69	1.19	3.38	3.00	0.22	5.84	0.63	0.38	1.00
8MP7-MANXBD-T-SS	15,000	1/2" MPI	0.312	3.00	1.50	0.69	2.57	1.75	5.13	4.00	0.34	8.12	0.69	0.50	1.38
9MP7-MANXBD-T-SS	15,000	9/16" MPI	0.359	3.00	1.50	0.75	2.57	1.75	5.13	4.00	0.34	8.12	0.69	0.50	1.38
12MP7-MANXBD-T-SS	15,000	3/4" MPI	0.516	4.12	2.06	0.88	3.25	2.25	6.50	10.35	0.44	9.67	0.88	0.62	1.75
16MP7-MANXBD-T-SS	12,500	1" MPI	0.688	4.75	2.38	1.13	4.13	2.81	8.25	10.35	0.56	12.24	1.25	1.13	2.00

For 2507 Super Duplex option, replace **-SS** with **-2507** and use **-XF** ferrule sets for sizes 12 and 16. Dimensions in inches are for reference only, subject to change.

Two Way Angle Valves (Replaceable Seat)

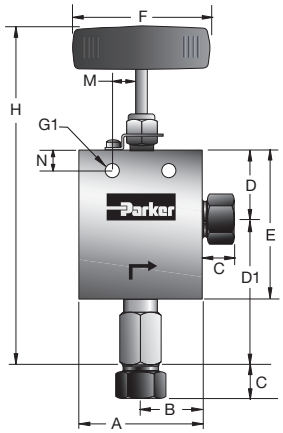

Notes:

G1 = Bracket mounting hole size

H = Dimension with stem in closed position

Panel Mount Template and drill sizes on Page 34

Rated Cv 2-Way Replaceable Seat (Angle)	
4MP7	0.47
6MP7	1.2
8MP7	1.95
9MP7	2.63
12MP7	4.2
16MP7	7.8

Parker Part No.	PSI	Connection	Inches												
			Orifice	A	B	C	D	D1	E	F	G1	H	M	N	Block Thick.
4MP7-MANABR-T-SS	15,000	1/4" MPI	0.125	2.50	1.25	0.50	1.19	2.32	2.25	3.00	0.22	5.94	0.63	0.38	1.00
6MP7-MANABR-T-SS	15,000	3/8" MPI	0.219	2.50	1.25	0.63	1.19	2.49	2.25	3.00	0.22	6.13	0.63	0.38	1.00
8MP7-MANABR-T-SS	15,000	1/2" MPI	0.312	3.00	1.50	0.69	1.63	3.18	3.12	4.00	0.34	7.80	0.69	0.50	1.38
9MP7-MANABR-T-SS	15,000	9/16" MPI	0.359	3.00	1.50	0.75	1.63	3.18	3.12	4.00	0.34	7.80	7.80	0.50	1.38
12MP7-MANABR-T-SS	15,000	3/4" MPI	0.516	4.12	2.06	0.88	2.25	3.88	4.25	10.35	0.44	9.30	0.88	0.62	1.75
16MP7-MANABR-T-SS	12,500	1" MPI	0.688	4.75	2.38	1.13	2.69	4.94	5.25	10.35	0.56	11.62	1.25	1.13	2.00

For 2507 Super Duplex option, replace **-SS** with **-2507** and use **-XF** ferrule sets for sizes 12 and 16. Dimensions in inches are for reference only, subject to change.

Parker Hannifin Corporation
Instrumentation Products Division
Jacksonville, AL USA
http://www.parker.com/ipd

MAN Series Actuators - Pneumatic, Piston Style

The need to control process and vent valves from a remote location makes air operated (pneumatic) valves a vital component to many process applications.

All MAN Series needle valves with MPI™ connections are available with Fail Open (-FO) or Fail Closed (-FC) Piston Type Actuators. Four sizes of air actuators (Medium, Heavy, Extra Heavy-Single Stage, and Extra Heavy-Two Stage) are offered to meet the service requirements of Parker MAN Series Needle Valves. Both Fail Closed (normally closed) and Fail Open (normally open) designs have overlapping piston sizes to help meet efficiency or economical requirements.

Actuators are available for Outdoor Service. These operators provide corrosion resistant components and prevent the ingress of outside elements and moisture. Limit Switch position location and Solenoid activation are available upon request.

Features and Benefits

- Fail Open or Fail Close with spring return
- Piston actuator sizing incorporates maximum al lowable air pressure of 100 psi
- Yoke design for separation of process and air pressure
- Stem Position Indicator is standard
- Anodized Aluminum Housing (for corrosion and wear resistance)
- -20°F (-29°C) to 200°F (93°C) ambient temperature range (for operation below 30°F (-1°C) dry air must be used and heat tracing is recommended)
- Remote actuation and position indication options available

Fail Open - C1S Actuator shown

Remote On-Off

Parker MAN series air-operated needle valves (FC – Fail Close or FO-Fail Open) can be controlled by a 3-way manual air valve or by a low pressure solenoid valve. These can be actuated manually or remotely depending on application requirements.

Parker's MAN series air-operated high pressure valves permit process control from a remotely located panel without the necessity of piping high pressure lines to the control panel. Safety is greatly increased and process "hysteresis" is reduced. Prudent selection of FC or FO valves, together with the automated valve, permit the system design to "Fail Safe" in either the closed or open condition in the event of loss of air pressure, electrical failure, or malfunction.

Where explosion proof conditions are a requirement, pneumatically actuated valves should be considered. Remote mounting of the solenoid valve removes the potential from the hazardous area.

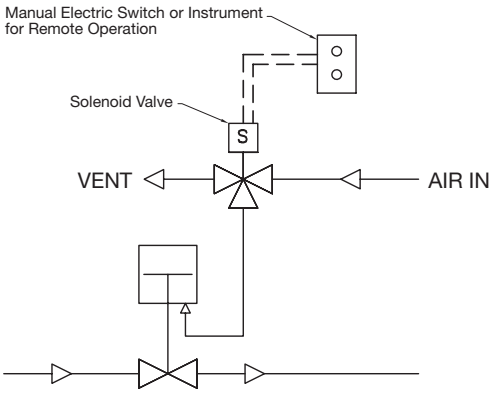

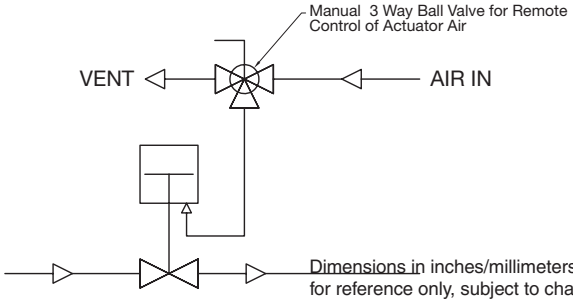

Dimensions in inches/millimeters are for reference only, subject to change.

Parker Hannifin Corporation
Instrumentation Products Division
Jacksonville, AL USA
http://www.parker.com/ipd

MAN Series Actuators - Piston Style Actuators

Piston type air-operated valves offer a unique, reliable design providing for a long and dependable life. These valves are more compact than diaphragm valves and are appropriate for applications such as high-flow gas and liquid delivery systems to reactors and mixer/vaporizers.

Features and Benefits

- Fail-Open or Fail-Close with spring return
- Yoke design for separation of process and air pressure
- Ease of stem replacement
- Stem position indicator is standard
- High actuator cycle life
- 1/8" NPT air inlet connection standard except Extra Heavy Duty has 3/8" NPT

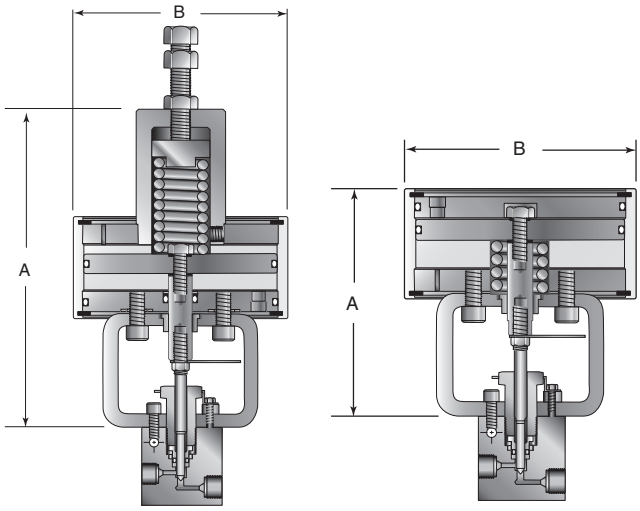

Fail Close Fail Open

NOTE: Air inlet for Fail Close operation is located in the back, opposite the front of valve. For other locations, consult factory. Holes supplied in yoke bracket for mounting.

Air Operated Materials

Cylinder, Piston, Cover Plates, Spring Housing: Anodized aluminum (for corrosion and wear resistance).

Yoke: Painted Steel

Actuator Order Suffix				
Duty Rating	Type	Ordering Suffix	Dimensions: Inches/mm	
			A	B
Medium	Fail Close	O1S	8.3 (210)	5.7 (144)
	Fail Open	C1S	5.5 (139)	5.7 (144)
Heavy	Fail Close	O2S	10.2 (260)	5.7 (144)
	Fail Open	C2S	7.5 (190)	5.7 (144)
Extra Heavy Single Stage	Fail Close	HO1S	15.2 (385)	9.4 (240)
	Fail Open	HC1S	8.6 (218)	9.4 (240)
Extra Heavy Two Stage	Fail Close	HO2S	18.5 (470)	9.4 (240)
	Fail Open	HC2S	12.0 (303)	9.4 (240)

MPI

Technical Data - Air Operator

- Maximum allowable working pressure: 100 psi (6.89 bar)
- Allowable piston temperature range: -20°F to 200°F (-29°C to 93°C), operating below 30°F (-1.1°C) with dry air only (heat trace may be needed for lower temperatures).
- Area of piston:
  Medium duty - 19.6 sq. in (126.5 sq. cm)
  Heavy duty - 39.2 sq. in (252.9 sq. cm)
  Extra Heavy duty single stage - 56 sq. in (361.3 sq. cm)
  Extra Heavy duty double stage - 112 sq. in (722.6 sq. cm)
- Approximate air usage/cycle @ 100 psi (6.89 bar):
  Medium duty - .04 SCF (.0011 SCM)
  Heavy duty - .08 SCF (.0022 SCM)
  Extra Heavy duty single stage - .33 SCF (.0095 SCM)
  Extra Heavy duty double stage - .67 SCF (.019 SCM)
- Life Cycle Tested to 100,000 cycles at 100 psi (6.89 bar) with no leakage or signs of wear or fatigue.

Note:
Fail Close = Air-to-Open
Fail Open = Air-to-Close

Outdoor Service Actuators		
Duty Rating	Type	Ordering Suffix
Medium	Fail Close	O1SOD
	Fail Open	C1SOD
Heavy	Fail Close	O2SOD
	Fail Open	C2SOD
Extra Heavy Single Stage	Fail Close	HO1SOD
	Fail Open	HC1SOD
Extra Heavy Two Stage	Fail Close	HO2SOD
	Fail Open	HC2SOD

Parker Hannifin Corporation
Instrumentation Products Division
Jacksonville, AL USA
http://www.parker.com/ipd

Actuator Selection - Fail Open Type MAN Series Valves

Valve Series	Duty Rating	System Pressure KSI (bar)										
		1-3 (70-210)	4 (275)	6 (410)	8 (550)	10 (690)	12 (830)	14 (970)	15 (1035)	Max. Press. psi (bar)*	Stem Travel in (mm)	Flow C_V**
4MP7	Medium Duty C1S	40 (2.76)	40 (2.76)	40 (2.76)	40 (2.76)	50 (3.45)	60 (4.14)	70 (4.83)	80 (5.52)	15,000 (1035)	0.25 (6.35)	0.31
	Heavy Duty C2S	20 (1.38)	20 (1.38)	20 (1.38)	20 (1.38)	25 (1.72)	30 (2.07)	35 (2.41)	40 (2.76)			
6MP7	Medium Duty C1S	45 (3.10)	45 (3.10)	45 (3.10)	45 (3.10)	55 (3.79)	65 (4.48)	75 (5.17)	85 (5.86)	15,000 (1035)	0.25 (6.35)	0.75
	Heavy Duty C2S	25 (1.72)	25 (1.72)	25 (1.72)	25 (1.72)	30 (2.07)	35 (2.41)	40 (2.76)	45 (3.10)			
8MP7	Medium Duty C1S	60 (4.14)	60 (4.14)	65 (4.48)	80 (5.52)	100 (6.89)	-	-	-	10,700 (737)	0.38 (9.65)	1.30
	Heavy Duty C2S	30 (2.07)	30 (2.07)	30 (2.07)	40 (2.76)	50 (3.45)	55 (3.79)	60 (4.14)	70 (4.83)	15,000 (1035)		
	Extra Heavy Duty Single Stage HC1S	25 (1.72)	25 (1.72)	25 (1.72)	30 (2.07)	35 (2.41)	45 (3.10)	50 (3.45)	55 (3.79)	15,000 (1035)		
	Extra Heavy Duty Two Stage HC2S	15 (1.03)	15 (1.03)	15 (1.03)	15 (1.03)	20 (1.38)	20 (1.38)	25 (1.72)	25 (1.72)	15,000 (1035)		
9MP7	Medium Duty C1S	65 (4.48)	65 (4.48)	75 (5.17)	100 (6.89)	-	-	-	-	8,600 (593)	0.38 (9.65)	1.75
	Heavy Duty C2S	35 (2.41)	35 (2.41)	40 (2.76)	50 (3.45)	55 (3.79)	60 (4.14)	70 (4.83)	75 (5.17)	15,000 (1035)		
	Extra Heavy Duty Single Stage HC1S	30 (2.07)	30 (2.07)	30 (2.07)	35 (2.41)	45 (3.10)	50 (3.45)	55 (3.79)	60 (4.14)	15,000 (1035)		
	Extra Heavy Duty Two Stage HC2S	15 (1.03)	15 (1.03)	15 (1.03)	20 (1.38)	20 (1.38)	25 (1.72)	30 (2.07)	35 (2.41)	15,000 (1035)		
12MP7	Medium Duty C1S	90 (6.21)	100 (6.89)	-	-	-	-	-	-	4,800 (330)	0.44 (11.18)	2.80
	Heavy Duty C2S	45 (3.10)	45 (3.10)	60 (4.14)	80 (5.52)	100 (6.89)	-	-	-	10,000 (690)		
	Extra Heavy Duty Single Stage HC1S	35 (2.41)	35 (2.41)	50 (3.45)	60 (4.14)	70 (4.83)	80 (5.52)	95 (6.55)	100 (6.89)	15,000 (1035)		
	Extra Heavy Duty Two Stage HC2S	20 (1.38)	20 (1.38)	25 (1.72)	30 (2.07)	35 (2.41)	40 (2.76)	45 (3.10)	50 (3.45)	15,000 (1035)		
16MP7	Medium Duty C1S	100 (6.89)	-	-	-	-	-	-	-	2,800 (193)	0.56 (14.22)	5.20
	Heavy Duty C2S	60 (4.14)	70 (4.83)	100 (6.89)	-	-	-	-	-	6,300 (435)		
	Extra Heavy Duty Single Stage HC1S	45 (3.10)	50 (3.45)	70 (4.83)	95 (6.55)	-	-	-	-	8,500 (585)		
	Extra Heavy Duty Two Stage HC2S	25 (1.72)	25 (1.72)	35 (2.41)	45 (3.10)	55 (3.79)	65 (4.48)	-	-	12,500 (860)		

To select Needle Valve Actuator:

Example: 8MP7-MANABR-T-SS-C2SOD

Need to know: Valve Model/Connection Size - **8MP7 Needle Valve**
Indoor or Outdoor Service - **Outdoor Servic**e
Maximum Operating Pressure: **Fluid - 12,000 psi**
Maximum Available Air Pressure - **60 psi**
Select Actuator Type (Fail Open or Fail Close) – **Fail Open Type**

Example: Using chart on page 41 (Fail Open Actuators), select **8MP7 Section**

Across top of chart, select **12 System Pressure** (12,000 psi max system pressure)
Go down that column to **8MP7 Section** to first row filled with number (air pressure)
First row with number is **55** – as your available **air pressure is 60 psi**, you do not have to go any further (if this number was more than 60, continue to next row)

This row (**Heavy Duty Actuator**) confirms that this actuator needs 55 psi to close the 8MP7 valve at 12,000 psi and you have 60 psi available.

Go to Ordering Suffix Charts on page 39 – find "**Heavy Duty**" Rating – "**Fail Open**"
Select Suffix code = -C2SOD (OD = Outdoor) and add to Needle Valve Model Number.

** C_V data is for 2-way straight valves.
For angle pattern, add approximately 50% to the C_V valve.

CAUTION: While testing has shown O-rings to provide satisfactory service life, both cyclic and shelf life may vary widely with differing service conditions, properties of reactants, pressure and temperature cycling and age of the O-ring, FREQUENT INSPECTIONS SHOULD BE MADE to detect any deterioration, and O-rings replaced as required.

*Maximum pressure rating is based on the lowest rating of any component. Actual working pressure may be determined by tubing pressure rating,if lower.

All dimensions for reference only and subject to change.
For prompt service, Parker Autoclave Engineers stocks select products. Consult your local representative.

Parker Hannifin Corporation
Instrumentation Products Division
Jacksonville, AL USA
http://www.parker.com/ipd

Actuator Selection - Fail Close Type MAN Series Valves

Valve Series	Duty Rating		System Pressure KSI (bar)								
			1-4 (70-275)	6 (410)	8 (550)	10 (690)	12 (830)	14 (970)	15 (1035)	Max. Press. psi (bar)	Flow Coefficient Cv**
4MP7	Medium Duty 01S	Air Pressure psi (bar)	65 (4.48)	65 (4.48)	65 (4.48)	75 (5.17)	85 (5.86)	95 (6.55)	95 (6.55)	15,000 (1035)	0.31 to 0.22***
		Spring Pre-Compression in (mm)	0.19 (4.83)	0.19 (4.83)	0.19 (4.83)	0.25 (6.35)	0.31 (7.87)	0.38 (9.65)	0.44 (11.18)		
		Stem Travel in (mm)	0.25 (6.35)	0.25 (6.35)	0.25 (6.35)	0.25 (6.35)	0.25 (6.35)	0.25 (6.35)	0.19 (4.83)		
	Heavy Duty 02S	Air Pressure psi (bar)	35 (2.41)	35 (2.41)	35 (2.41)	40 (2.76)	45 (3.10)	50 (3.45)	50 (3.45)		
6MP7	Medium Duty 01S	Air Pressure psi (bar)	65 (4.48)	65 (4.48)	75 (5.17)	85 (5.86)	95 (6.55)	95 (6.55)	95 (6.55)	15,000 (1035)	0.75 to 0.57***
		Spring Pre-Compression in (mm)	0.19 (4.83)	0.19 (4.83)	0.25 (6.35)	0.31 (7.87)	0.38 (9.65)	0.44 (11.18)	0.50 (12.70)		
		Stem Travel in (mm)	0.25 (6.35)	0.25 (6.35)	0.25 (6.35)	0.25 (6.35)	0.25 (6.35)	0.19 (4.83)	0.12 (3.05)		
	Heavy Duty 02S	Air Pressure psi (bar)	35 (2.41)	35 (2.41)	40 (2.76)	45 (3.10)	50 (3.45)	50 (3.45)	50 (3.45)		
8MP7	Medium Duty 01S	Air Pressure psi (bar)	85 (5.86)	90 (6.21)	95 (6.55)	95 (6.55)	-	-	-	9,800 (675)	1.29 to 0.53***
		Spring Pre-Compression in (mm)	0.31 (7.87)	0.34 (8.64)	0.47 (11.94)	0.56 (14.22)	-	-	-		
		Stem Travel in (mm)	0.25 (6.35)	0.25 (6.35)	0.15 (3.81)	0.06 (1.52)	-	-	-		
	Heavy Duty 02S	Air Pressure psi (bar)	50 (3.45)	55 (3.79)	65 (4.48)	70 (4.83)	75 (5.17)	75 (5.17)	75 (5.17)	15,000 (1035)	1.29 to 0.53***
		Spring Pre-Compression in (mm)	0.19 (4.83)	0.22 (5.59)	0.28 (7.11)	0.34 (8.64)	0.44 (11.18)	0.50 (12.70)	0.56 (14.22)		
		Stem Travel in (mm)	0.25 (6.35)	0.25 (6.35)	0.25 (6.35)	0.25 (6.35)	0.19 (4.83)	0.12 (3.05)	0.06 (1.52)		
	Extra Heavy Duty Single Stage H01S	Air Pressure psi (bar)	40 (2.76)	40 (2.76)	50 (3.45)	55 (3.79)	60 (4.13)	65 (4.48)	70 (4.83)	15,000 (1035)	1.30
		Spring Pre-Compression in (mm)	0.25 (6.35)	0.28 (7.11)	0.38 (9.65)	0.47 (11.94)	0.56 (14.22)	0.66 (16.76)	0.75 (19.05)		
		Stem Travel in (mm)	0.38 (9.65)	0.38 (9.65)	0.38 (9.65)	0.38 (9.65)	0.38 (9.65)	0.38 (9.65)	0.38 (9.65)		
	Extra Heavy Duty Two Stage H02S	Air Pressure psi (bar)	30 (2.07)	35 (2.41)	35 (2.41)	40 (2.76)	40 (2.76)	45 (3.10)	50 (3.45)	15,000 (1035)	1.30
		Spring Pre-Compression in (mm)	0.13 (3.30)	0.16 (4.06)	0.19 (4.83)	0.25 (6.35)	0.28 (7.11)	0.34 (8.64)	0.38 (9.65)		
		Stem Travel in (mm)	0.38 (9.65)	0.38 (9.65)	0.38 (9.65)	0.38 (9.65)	0.38 (9.65)	0.38 (9.65)	0.38 (9.65)		

To select Needle Valve Actuator:

Example: **8MP7-MANABR-T-SS-H01S**

Need to know:
Valve Model/Connection Size - **8MP7 Needle Valve**
Indoor or Outdoor Service - **Indoor Service**
Maximum Operating Pressure: Fluid - **12,000 psi**
Maximum Available Air Pressure - **60 psi**
Select Actuator Type (Fail Open or Fail Close) – **Fail Closed Type**

Example: Using chart on page 44 (Fail Close Actuators), select **8MP7 Section**

Across top of chart, select **12 System Pressure** (12,000 psi max system pressure)
Go down that column to **8MP7 Section** to first row filled with number (air pressure)
First row with number is 75 – as your available air pressure is 60 psi, you have to go further. Next actuator (extra Heavy Duty Single Stage) H01S needs 60 psi to close at this pressure.

This row (**Extra Heavy Duty Single Stage H01S Actuator**) confirms that this actuator needs 60 psi to close the 8MP7 valve at 12,000 psi and you have 60 psi available. Go to Ordering Suffix Charts on page 39 – find "**Extra Heavy Single Stage**" Duty Rating – "**Fail Closed**" Select Suffix code = **-H01SOD (OD = Outdoor)** and add to Needle Valve Model Number.

** C_V data is for 2-way straight valves.
For angle pattern, add approximately 50% to the C_V valve.

CAUTION: While testing has shown O-rings to provide satisfactory service life, both cyclic and shelf life may vary widely with differing service conditions, properties of reactants, pressure and temperature cycling and age of the O-ring, FREQUENT INSPECTIONS SHOULD BE MADE to detect any deterioration, and O-rings replaced as required.

*Maximum pressure rating is based on the lowest rating of any component. Actual working pressure may be determined by tubing pressure rating,if lower.

All dimensions for reference only and subject to change.
For prompt service, Parker Autoclave Engineers stocks select products. Consult your local representative.

Parker Hannifin Corporation
Instrumentation Products Division
Jacksonville, AL USA
http://www.parker.com/ipd

Actuator Selection - Fail Close Type MAN Series Valves

Valve Series	Operator Duty		System Pressure KSI (bar)								
			1-4 (70-275)	6 (410)	8 (550)	10 (690)	12 (830)	14 (970)	15 (1035)	Max. Press. psi (bar)	Flow Coefficient Cv**
9MP7	Medium Duty 01S	Air Pressure psi (bar)	95 (6.55)	95 (6.55)	95 (6.55)	-	-	-	-	7,900 (545)	1.74 to 0.72***
		Spring Pre-Compression in (mm)	0.38 (9.65)	0.44 (11.18)	0.56 (14.22)	-	-	-	-		
		Stem Travel in (mm)	0.25 (6.35)	0.19 (4.83)	0.06 (1.52)	-	-	-	-		
	Heavy Duty 02S	Air Pressure psi (bar)	55 (3.79)	65 (4.48)	70 (4.83)	75 (5.17)	75 (5.17)	75 (5.17)	-	14,000 (965)	1.74 to 0.72***
		Spring Pre-Compression in (mm)	0.22 (5.59)	0.28 (7.11)	0.34 (8.64)	0.44 (11.18)	0.50 (12.70)	0.59 (14.99)	-		
		Stem Travel in (mm)	0.25 (6.35)	0.25 (6.35)	0.25 (6.35)	0.19 (4.83)	0.13 (3.30)	0.06 (1.52)	-		
	Extra Heavy Duty Single Stage H01S	Air Pressure psi (bar)	45 (3.10)	45 (3.10)	55 (3.79)	60 (4.13)	65 (4.48)	70 (4.83)	75 (5.17)	15,000 (1035)	1.75
		Spring Pre-Compression in (mm)	0.31 (7.87)	0.34 (8.64)	0.47 (11.94)	0.59 (14.99)	0.88 (22.35)	1.00 (25.40)	1.13 (28.70)		
		Stem Travel in (mm)	0.38 (9.65)	0.38 (9.65)	0.38 (9.65)	0.38 (9.65)	0.38 (9.65)	0.38 (9.65)	0.38 (9.65)		
	Extra Heavy Duty Two Stage H02S	Air Pressure psi (bar)	25 (1.72)	30 (2.07)	35 (2.41)	40 (2.76)	45 (3.10)	50 (3.45)	55 (3.79)	15,000 (1035)	1.75
		Spring Pre-Compression in (mm)	0.16 (4.06)	0.19 (4.83)	0.25 (6.35)	0.28 (7.11)	0.44 (11.18)	0.56 (14.22)	0.62 (15.74)		
		Stem Travel in (mm)	0.38 (9.65)	0.38 (9.65)	0.38 (9.65)	0.38 (9.65)	0.38 (9.65)	0.38 (9.65)	0.38 (9.65)		
12MP7	Extra Heavy Duty Single Stage H01S	Air Pressure psi (bar)	55 (3.79)	65 (4.48)	80 (5.52)	95 (6.55)	100 (6.89)	-	-	12,000 (827)	2.80
		Spring Pre-Compression in (mm)	0.44 (11.18)	0.63 (16.00)	0.84 (21.34)	1.06 (26.92)	1.44 (36.57)	-	-		
		Stem Travel in (mm)	0.44 (11.18)	0.44 (11.18)	0.44 (11.18)	0.44 (11.18)	0.62 (15.74)	-	-		
	Extra Heavy Duty Two Stage H02S	Air Pressure psi (bar)	40 (2.76)	50 (3.45)	55 (3.79)	60 (4.13)	65 (4.48)	70 (4.83)	70 (4.83)	15,000 (1035)	2.80
		Spring Pre-Compression in (mm)	0.22 (5.59)	0.31 (7.87)	0.44 (11.18)	0.53 (13.46)	0.81 (20.57)	0.84 (21.34)	0.94 (23.87)		
		Stem Travel in (mm)	0.44 (11.18)	0.44 (11.18)	0.44 (11.18)	0.44 (11.18)	0.44 (11.18)	0.44 (11.18)	0.44 (11.18)		
16MP7	Extra Heavy Duty Single Stage H01S	Air Pressure psi (bar)	75 (5.17)	100 (6.89)	-	-	-	-	-	6,500 (448)	5.20
		Spring Pre-Compression in (mm)	0.69 (17.53)	1.13 (28.70)	-	-	-	-	-		
		Stem Travel in (mm)	0.50 (12.70)	0.50 (12.70)	-	-	-	-	-		
	Extra Heavy Duty Two Stage H02S	Air Pressure psi (bar)	55 (3.79)	65 (4.48)	75 (5.17)	85 (5.86)	90 (6.20)	90 (6.20)	90 (6.20)	15,000 (1035)	5.20
		Spring Pre-Compression in (mm)	0.34 (8.64)	0.53 (13.46)	0.69 (17.53)	0.88 (22.35)	1.14 (28.95)	1.38 (35.05)	1.44 (36.57)		
		Stem Travel in (mm)	0.50 (12.70)	0.50 (12.70)	0.50 (12.70)	0.50 (12.70)	0.38 (9.65)	0.12 (3.04)	0.06 (1.52)		

* Maximum pressure rating is based on the lowest rating of any component. Actual working pressure may be determined by tubing pressure rating, if lower.

** C_V data is for 2-way straight valves. For angle pattern, add approximately 50% to the C_V valve.

*** C_V varies because of spring compression limitations. The flow coefficient range is given for the maximum stem travel (lowest system pressure) to minimum travel (highest system pressure).

CAUTION: While testing has shown O-rings to provide satisfactory service life, both cyclic and shelf life may vary widely with differing service conditions, properties of reactants, pressure and temperature cycling and age of the O-ring, FREQUENT INSPECTIONS SHOULD BE MADE to detect any deterioration, and O-rings replaced as required.

All dimensions for reference only and subject to change.
For prompt service, Parker Autoclave Engineers stocks select products. Consult your local representative.

Parker Hannifin Corporation
Instrumentation Products Division
Jacksonville, AL USA
http://www.parker.com/ipd

MAN Series Actuators - Electric Flow Regulating (FRC)

There is an increasing need for remote control of many valves, including Needle multi-turn style valves. Until recently, this required a combination of both pneumatic and electric systems working in tandem, which is cumbersome and expensive to operate.

Parker Autoclave Engineers has developed an All-Electric Regulating/Full Closure actuator for use with the MPI™ (Medium Pressure Inverted (Gland)) connection style needle valves.

Available in Weather-Proof or Explosion-Proof versions, these actuators allow for remote control and feedback to digital control systems with just a 4-20mA signal.

Features and Benefits

- 24 VDC, 72 Watt Max Operation (5 wire)
- 4-20mA Remotely Powered Input Signal
- Internally Powered 4-20mA Output of Exact Position
- Oiled-For-Life Bearings (Bronze) and Gears (Sintered)
- Weather-Proof Aluminum Housing
- Explosion-Proof Cas Aluminum Anodized Nema 8/IP67 CSA Approved, Class 1 Div 1 Groups B, C, D
- Life Expectancy - 250,000 Cycles MTF

Electric Actuated Shut-Off/Flow Regulating

Generalized Flow Coefficient Curves (C_V)

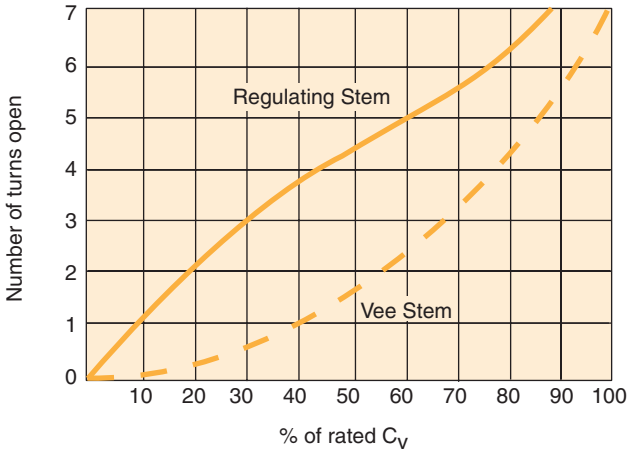

Explosion Proof Electric Actuated Shut-Off/Flow Regulating

Parker Hannifin Corporation
Instrumentation Products Division
Jacksonville, AL USA
http://www.parker.com/ipd

MPI™ Medium Pressure Products

Dimensions:

Weather-Proof Version

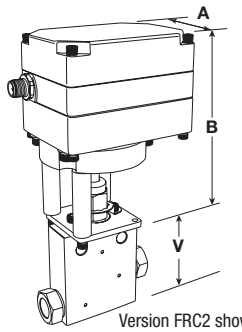

Version FRC2 shown

Explosion-Proof Version

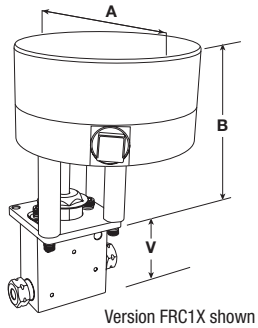

Version FRC1X shown

Version	A	B	V
Weather-Proof **FRC1**	3.0" (76.2 mm)	3.67" (93.2 mm)	See Valve Dimension of Body Style on Pages 35-37
Weather-Proof **FRC2** High Torque	3.0" (76.2 mm)	5.57" (141.4 mm)	
Explosion-Proof **FRC1X**	4.25" (107.9 mm)	4.35" (110.4 mm)	
Explosion-Proof **FRC2X** High Torque	4.25" (107.9 mm)	5.86" (148.8 mm)	

Electrical Specifications:

- Electrical Input: 24VDC only, 72 Watt maximum
- Control Input: 4-20mA
- Position Feedback: Independent 4-20mA
- Position Detection: Hall Sensors
- Motor: BLDC brushless DC motor

Position on Powerloss:

- Remembers Last Position
- Reseats Valve if Signal is Between 3.0 and 4.16mA

Mechanical Specifications:

- Standard Enclosure - EPD Coated NEMA 4/IP65 Equivalent
- Optional Anodized Aluminum Explosion-Proof Enclosure, Nema 8/IP67, CSA Approved for Class 1, Groups B, C, D /T6 Areas
- 500+ Positions per turn (+/- 0.25° Position Accuracy), 3243 Actuator Positions over Full Span
- Speed Range: 3 to 15 seconds/turn
- Operational Temperature -40°(-40°C) to 160°F(70°C), Valve Temperature not to exceed 600°F
- Actuator Life Expectancy: 250,000 cycles
- Gears and Bearings are Lifetime Lubricated
- 20 ft. cable included with 6 pin/5 wire connector (FRC1 and FRC2 only)

MPI

Ordering Guide:

Example Part Number:	9MP7	—	MAN		ARR	—	T	—	SS	—	LBT		FRC1
Ordering Parameters/Options:	Valve Size Connection Type		Valve Series		Valve Body/ Stem Type		Valve Packing (-100 to 600°F Options)		Valve Material		Valve Options		Electric Flow Regulating Actuator
Table Reference: (see below)	A		B		C		D		E		F		G

Example: **9MP7-MANARR-T-SS-LBT-FRC1** = 9/16" MPI, MAN Series Needle Valve, 2 Way Angle/Regulating Stem/Replaceable Seat, 316 Stainless Steel, Cryogenic, Indoor Weather-Proof Electric Actuator

A - Valve Size / Connection Type	
4MP7	1/4" MPI
6MP7	3/8" MPI
8MP7	1/2" MPI
9MP7	9/16" MPI

B - Valve Series	
MAN	MAN Series Needle Valves

C - Valve Body / Stem Type	
LR	2 Way Straight/Regulating Stem
AR	2 Way Angle/Regulating Stem
ARR	2 Way Angle/Regulating Stem/Replaceable Seat
XRD[1]	3 Way/Regulating/1 Inlet - 2 Stem Outlet

D - Valve Packing (-100 to 600ºF Options)	
T	PTFE Packing: -100ºF (-73ºC) to 450ºF (232ºC)
TG[2]	PTFE/Glass (25%) Packing to 600ºF (316ºC)

E - Valve Material	
SS	316 Stainless Steel (Cold Worked)
2507	Super Duplex (Annealed)

F - Valve Options	
LBT	Cryogenic Applications to -100ºF (-73ºC)
HYG	Hydrogen/Helium Applications
XF	Extra Strength Ferrule Set for sizes 12 & 16 (2507 Super Duplex Tubing Only)

G - Electric Flow Regulating Actuator	
FRC1	Indoor/Weather-Proof
FRC2	Indoor/Weather-Proof (for 8MP7 or 9MP7 Only)
FRC1X	Explosion-Proof - Class 1, Div. 1, Groups B, C, and D
FRC2X	Explosion-Proof - Class 1, Div. 1, Groups B, C, and D (for 8MP7 or 9MP7 Only)
FRC1Xc	Explosion-Proof with Div 2 Explosion Proof Cable Option
FRC2Xc	Explosion-Proof with Div 2 Explosion Proof Cable Option (for 8MP7 or 9MP7 Only)

1- XRD option would require two actuators unless otherwise specified
2- Good ventilation is required when using Valve/Actuator at extended temperatures. Actuator internal temperature cannot exceed -40° to 160°F.

Parker Hannifin Corporation
Instrumentation Products Division
Jacksonville, AL USA
http://www.parker.com/ipd

MAGV Series Single Block and Bleed Gauge Valve

(Replaces MPGV Series Ball Valves)

Gauge valve and Bleed valve are designed to be used together. Bleed valve can be placed in any of the three possible outlet locations as desired.

Parker Part No.	Pressure psi (bar)	Connection	Orifice inch (mm)	Dimensions - inches (mm)									
				A	B	C	D	E	F	G	H	J	"K" Dia
6MP7-MAGV-T-SS	15,000 (1034)	3/8" MPI	0.125 (3.18)	3.63 (92.20)	2.50 (63.50)	1.25 (31.75)	1.39 (35.31)	1.25 (31.75)	0.50 (12.70)	0.94 (23.88)	0.25 (6.35)	0.25 (6.35)	0.28 (7.11)
8MP7-MAGV-T-SS	15,000 (1034)	1/2" MPI	0.125 (3.18)	4.70 (119.38)	3.00 (76.20)	1.50 (38.10)	1.88 (47.75)	1.75 (44.45)	0.65 (16.51)	0.94 (23.88)	0.38 (9.65)	0.38 (9.65)	0.28 (7.11)
9MP7-MAGV-T-SS	15,000 (1034)	9/16" MPI	0.125 (3.18)	4.70 (119.38)	3.00 (76.20)	1.50 (38.10)	1.88 (47.75)	1.75 (44.45)	0.65 (16.51)	0.94 (23.88)	0.38 (9.65)	0.38 (9.65)	0.28 (7.11)

For 2507 Super Duplex option, replace **-SS** with **-2507**

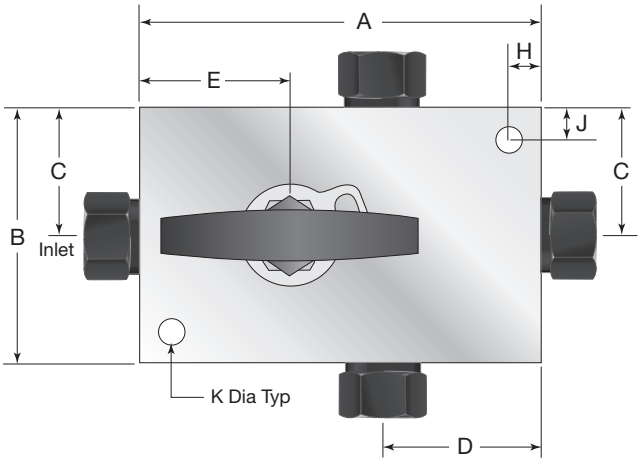

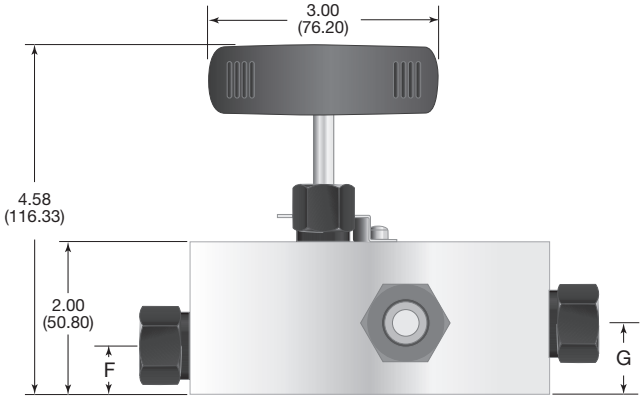

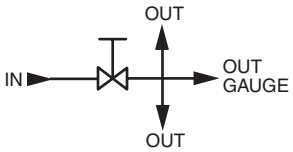

Material of Construction

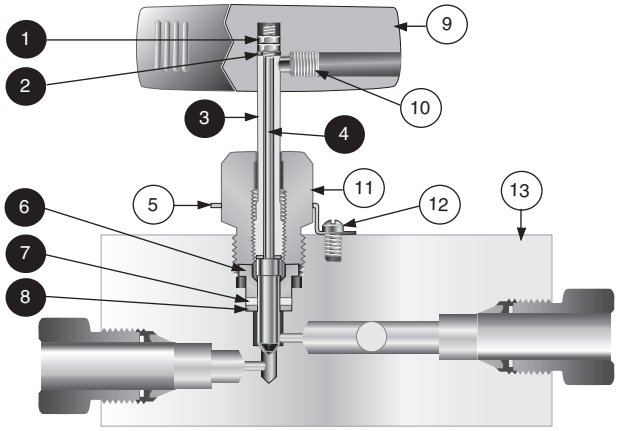

Item#	Description	Material
❶	Hex Nut	300 Series SS
❷	Thrust Washer	17-4PH
❸	Stem Sleeve	304 SS
❹	Stem	316 SS
5	Locking Device	302 SS
❻	Packing Washer	Ampco 45
❼	Packing	PTFE
❽	Bottom Washer	316 SS
9	Handle	316 SS
10	Pan Hd Screw 10-24 x 1/4"	300 Series SS
11	Packing Gland	Ampco 45
12	Screw	18-8 SS
13	Valve Body	316 SS

❶ Typical spare parts found in Repair Kit

Parker Hannifin Corporation
Instrumentation Products Division
Jacksonville, AL USA
http://www.parker.com/ipd

MABV Series Bleed Valves

(Replaces MPBV Series Ball Valves)

				Dimensions - inches (mm)		
Parker Part No.	Pressure psi (bar)	Connection	Orifice inch (mm)	A	B	C
6T7-MABV-V-SS	15,000 (1034)	3/8" Tube Stub	0.094 (2.39)	4.05 (102.87)	3.22 (81.79)	1.61 (40.89)
8T7-MABV-V-SS	15,000 (1034)	1/2" Tube Stub	0.094 (2.39)	4.50 (114.30)	3.68 (93.47)	1.88 (47.75)
9T7-MABV-V-SS	15,000 (1034)	9/16" Tube Stub	0.094 (2.39)	4.56 (115.82)	3.74 (95.00)	1.94 (49.28)

For 2507 Super Duplex option, replace **-SS** with **-2507**

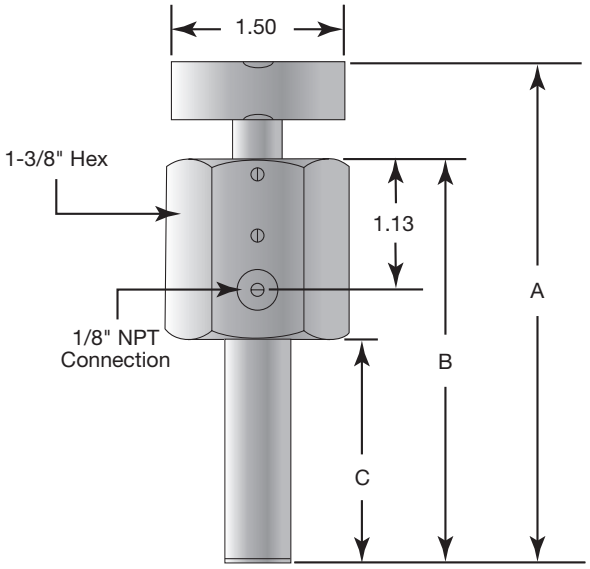

MAGV Series Gauge Valve with MABV Vent valve shown in one of three possible outlet locations.

Material of Construction

Item#	Qty	Description	Material
1	1	Handle	Aluminum
2	2	Spring Pin	18-8 SS
3	1	O-ring	Fluorocarbon Rubber
4	1	Body	316 SS
5	1	Hex Socket Set Screw	300 Series SS
6	1	Stem	316 SS

Note: No repair kit available, replace valve.

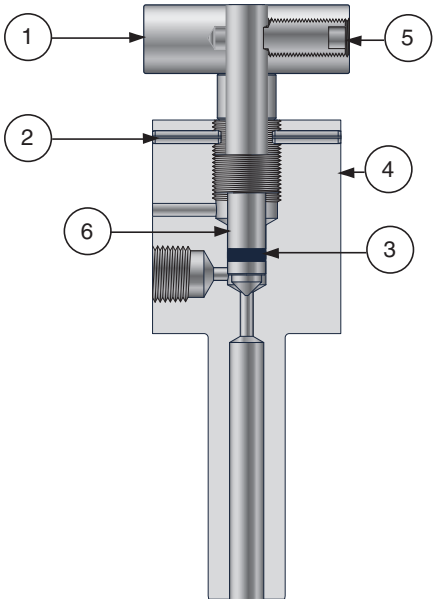

Parker Hannifin Corporation
Instrumentation Products Division
Jacksonville, AL USA
http://www.parker.com/ipd

MADBN Series Double Block and Bleed Needle Valves

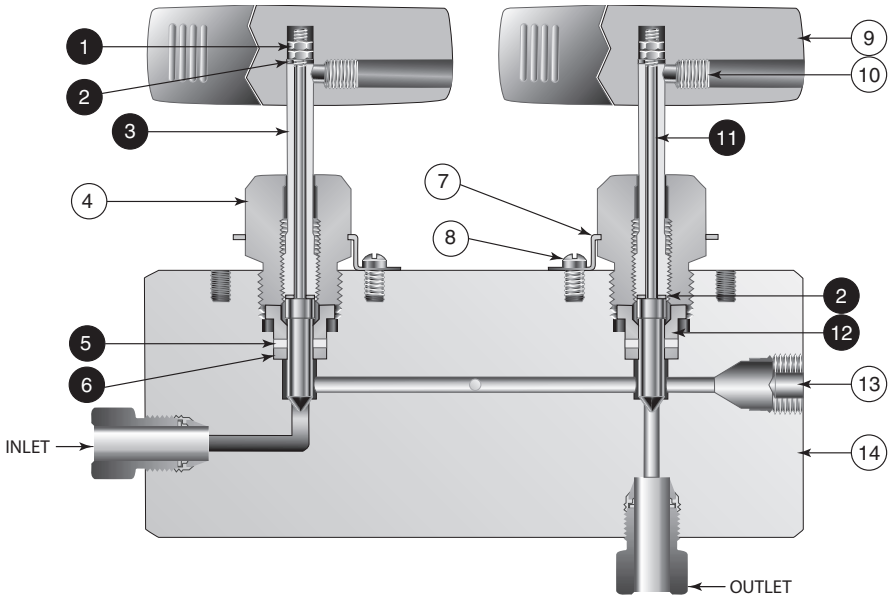

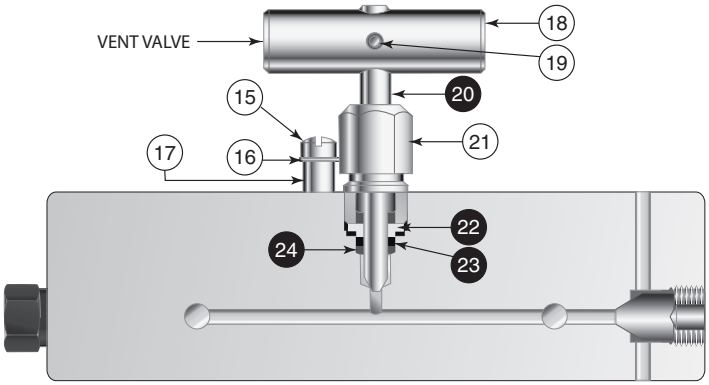

BOTTOM VIEW

Material of Construction

Item#	Description	Material
1	Hex Nut	Stainless
2	Thrust Washer	17-4PH
3	Stem Sleeve	304 SS
4	Packing Gland	Ampco 45
5	Packing	PTFE
6	Bottom Washer	316 SS
7	Locking Device	302 SS
8	Pan Hd Screw 10-24 x 1/4"	18-8 SS
9	Handle	316 SS
10	Set Screw	Stainless
11	Stem	316 SS
12	Packing Washer	Ampco 45

Item#	Description	Material
13	Flush Plug	316 SS
14	Body	316 SS
15	Pan Head Screw M3.5x.6x10mm	Stainless
16	Locking Device	316 SS
17	Spacer	316 SS
18	Handle	316 SS
19	Spring Pin	18-8 SS
20	Stem	316 SS
21	Packing Gland	316 SS
22	Packing Washer	Ampco 45
23	Packing	PTFE
24	Bottom Washer	316 SS

Parker Hannifin Corporation
Instrumentation Products Division
Jacksonville, AL USA
http://www.parker.com/ipd

MADBN Series Double Block and Bleed Needle Valves

Parker Part No.	Pressure psi (bar)	Connection	Orifice inch (mm)	Dimensions - inches (mm)														
				A	B	C	D	D1	E	F	G	H	M	N	O	P	Q	V
4MP7-MADBNLB-T-SS	15,000 (1034)	1/4" MPI	0.093 (2.36)	5.75 (146.05)	1.25 (31.75)	0.50 (12.70)	1.50 (38.10)	1.13 (28.70)	2.38 (60.45)	3.00 (76.20)	1.00 (25.40)	4.89 (124.21)	0.69 (17.53)	2.88 (73.15)	0.63 (16.00)	1.50 (38.10)	1.47 (37.34)	0.50 (12.70)
6MP7-MADBNLB-T-SS	15,000 (1034)	3/8" MPI	0.093 (2.36)	6.00 (152.40)	1.38 (35.05)	0.63 (16.00)	1.50 (38.10)	1.13 (28.70)	2.38 (60.45)	3.00 (76.20)	1.00 (25.40)	4.89 (124.21)	0.69 (17.53)	3.00 (76.20)	0.63 (16.00)	1.50 (38.10)	1.47 (37.34)	0.50 (12.70)
8MP7-MADBNLB-T-SS	15,000 (1034)	1/2" MPI	0.093 (2.36)	7.50 (190.50)	1.50 (38.10)	0.69 (17.53)	2.38 (60.45)	1.75 (44.45)	3.58 (90.93)	4.00 (101.60)	1.00 (25.40)	6.63 (168.40)	0.69 (17.53)	3.75 (95.25)	0.63 (16.00)	1.50 (38.10)	1.47 (37.34)	0.50 (12.70)
9MP7-MADBNLB-T-SS	15,000 (1034)	9/16" MPI	0.093 (2.36)	7.50 (190.50)	1.50 (38.10)	0.75 (19.05)	2.38 (60.45)	1.75 (44.45)	3.58 (90.93)	4.00 (101.60)	1.00 (25.40)	6.63 (168.40)	0.69 (17.53)	3.75 (95.25)	0.63 (16.00)	1.50 (38.10)	1.47 (37.34)	0.50 (12.70)

For 2507 Super Duplex option, replace **-SS** with **-2507**

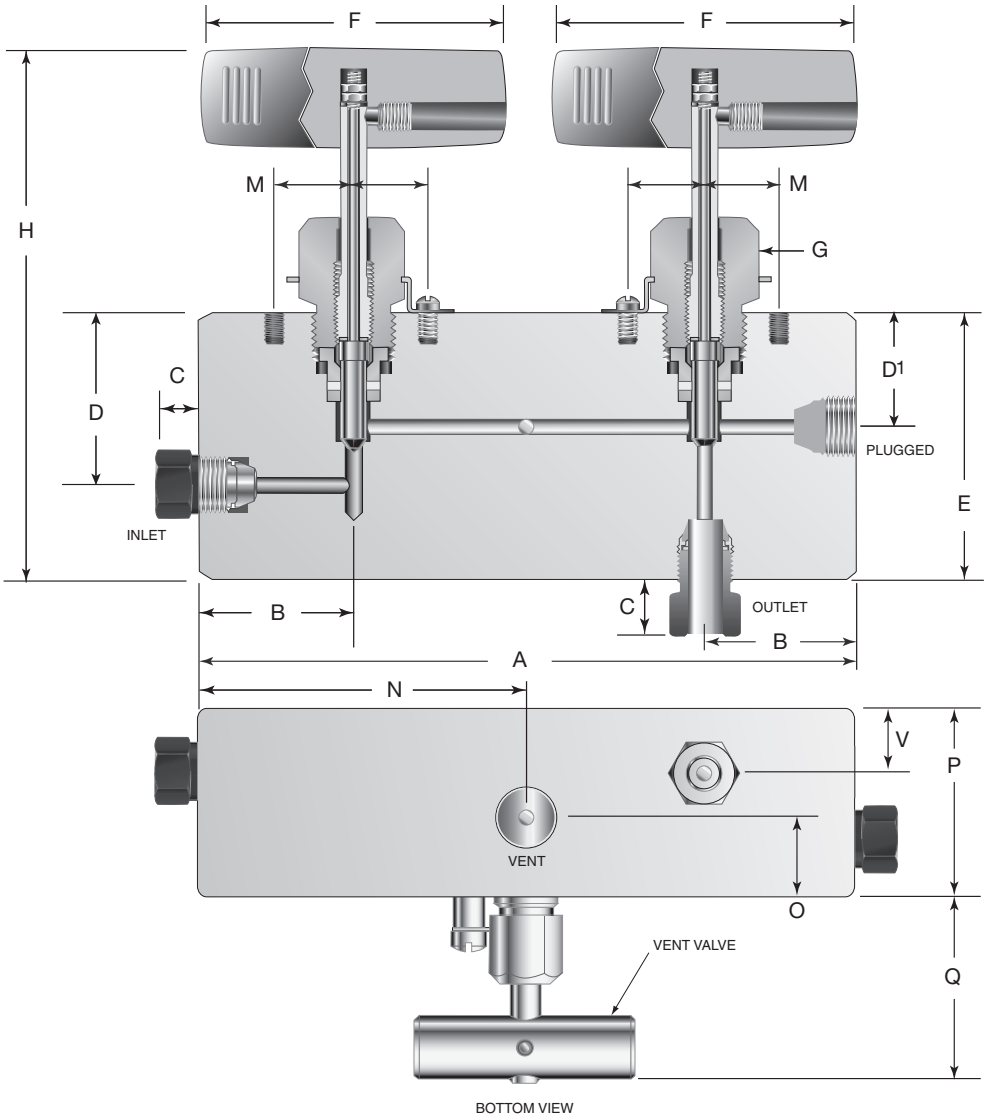

Notes:

G = Packing gland mounting hole drill size

H = Dimension with stem in closed position

All vent connections are 1/4" NPT

Parker Hannifin Corporation
Instrumentation Products Division
Jacksonville, AL USA
http://www.parker.com/ipd

Available End Connections

Standard End Connections

A – Two ferrule A-LOK® compression port

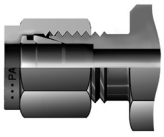

Z – Single ferrule CPI™ compression port

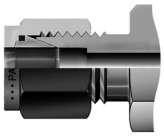

F – ANSI/ASME B1.20.1 internal pipe threads

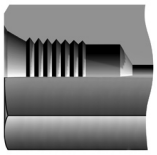

M – ANSI/ASME B1.20.1 external pipe threads

Q – UltraSeal face seal port

V – VacuSeal face seal port

MP7 – Parker MPI™ (Medium Pressure Inverted)

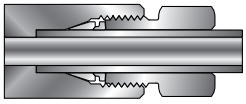

Non-Standard End Connections

TA – Tube adapter connection

F5 – SAE J1926/2, Part 2: Heavy-duty (S Series) stud ends

G5 – SAE J1926/1, Part 1: Threaded port with O-ring seal in truncated housing

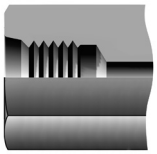

L – SAE J1453, Fitting – O-ring face seal – External thread with O-ring groove designed to seal with an elastomer against a sleeve

KF – British Standard BS 21 (ISO 7-1), Internal pipe threads

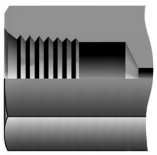

KM – British Standard BS 21 (ISO 7-1), External pipe threads

Parker Hannifin Corporation
Instrumentation Products Division
Jacksonville, AL USA
http://www.parker.com/ipd

Offer of Sale

The items described in this document and other documents and descriptions provided by Parker Hannifin Corporation, its subsidiaries and its authorized distributors ("Seller") are hereby offered for sale at prices to be established by Seller. This offer and its acceptance by any customer ("Buyer") shall be governed by all of the following Terms and Conditions. Buyer's order for any item described in its document, when communicated to Seller verbally, or in writing, shall constitute acceptance of this offer. All goods or work described will be referred to as "Products".

1. Terms and Conditions. Seller's willingness to offer Products, or accept an order for Products, to or from Buyer is expressly conditioned on Buyer's assent to these Terms and Conditions and to the terms and conditions found on-line at www.parker.com/saleterms/. Seller objects to any contrary or additional term or condition of Buyer's order or any other document issued by Buyer.

2. Price Adjustments; Payments. Prices stated on the reverse side or preceding pages of this document are valid for 30 days. After 30 days, Seller may change prices to reflect any increase in its costs resulting from state, federal or local legislation, price increases from its suppliers, or any change in the rate, charge, or classification of any carrier. The prices stated on the reverse or preceding pages of this document do not include any sales, use, or other taxes unless so stated specifically. Unless otherwise specified by Seller, all prices are F.O.B. Seller's facility, and payment is due 30 days from the date of invoice. After 30 days, Buyer shall pay interest on any unpaid invoices at the rate of 1.5% per month or the maximum allowable rate under applicable law.

3. Delivery Dates; Title and Risk; Shipment. All delivery dates are approximate and Seller shall not be responsible for any damages resulting from any delay. Regardless of the manner of shipment, title to any products and risk of loss or damage shall pass to Buyer upon tender to the carrier at Seller's facility (i.e., when it's on the truck, it's yours). Unless otherwise stated, Seller may exercise its judgment in choosing the carrier and means of delivery. No deferment of shipment at Buyers' request beyond the respective dates indicated will be made except on terms that will indemnify, defend and hold Seller harmless against all loss and additional expense. Buyer shall be responsible for any additional shipping charges incurred by Seller due to Buyer's changes in shipping, product specifications or in accordance with Section 13, herein.

4. Warranty. Seller warrants that the Products sold here-under shall be free from defects in material or workmanship for a period of twelve months from the date of delivery to Buyer or 2,000 hours of normal use, whichever occurs first. This warranty is made only to Buyer and does not extend to anyone to whom Products are sold after purchased from Seller. The prices charged for Seller's products are based upon the exclusive limited warranty stated above, and upon the following disclaimer: DISCLAIMER OF WARRANTY: THIS WARRANTY COMPRISES THE SOLE AND ENTIRE WARRANTY PERTAINING TO PRODUCTS PROVIDED HEREUNDER. SELLER DISCLAIMS ALL OTHER WARRANTIES, EXPRESS AND IMPLIED, INCLUDING MERCHANTABILITY AND FITNESS FOR A PARTICULAR PURPOSE.

5. Claims; Commencement of Actions. Buyer shall promptly inspect all Products upon delivery. No claims for shortages will be allowed unless reported to the Seller within 10 days of delivery. No other claims against Seller will be allowed unless asserted in writing within 60 days after delivery or, in the case of an alleged breach of warranty, within 30 days after the date within the warranty period on which the defect is or should have been discovered by Buyer. Any action based upon breach of this agreement or upon any other claim arising out of this sale (other than an action by Seller for any amount due to Seller from Buyer) must be commenced within thirteen months from the date of tender of delivery by Seller or, for a cause of action based upon an alleged breach of warranty, within thirteen months from the date within the warranty period on which the defect is or should have been discovered by Buyer.

6. LIMITATION OF LIABILITY. UPON NOTIFICATION, SELLER WILL, AT ITS OPTION, REPAIR OR REPLACE A DEFECTIVE PRODUCT, OR REFUND THE PURCHASE PRICE. IN NO EVENT SHALL SELLER BE LIABLE TO BUYER FOR ANY SPECIAL, INDIRECT, INCIDENTAL OR CONSEQUENTIAL DAMAGES ARISING OUT OF, OR AS THE RESULT OF, THE SALE, DELIVERY, NON-DELIVERY, SERVICING, USE OR LOSS OF USE OF THE PRODUCTS OR ANY PART THEREOF, OR FOR ANY CHARGES OR EXPENSES OF ANY NATURE INCURRED WITHOUT SELLER'S WRITTEN CONSENT, EVEN IF SELLER HAS BEEN NEGLIGENT, WHETHER IN CONTRACT, TORT OR OTHER LEGAL THEORY. IN NO EVENT SHALL SELLER'S LIABILITY UNDER ANY CLAIM MADE BY BUYER EXCEED THE PURCHASE PRICE OF THE PRODUCTS.

7. Contingencies. Seller shall not be liable for any default or delay in performance if caused by circumstances beyond the reasonable control of Seller.

8. User Responsibility. The user, through its own analysis and testing, is solely responsible for making the final selection of the system and Product and assuring that all performance, endurance, maintenance, safety and warning requirements of the application are met. The user must analyze all aspects of the application and follow applicable industry standards and Product information. If Seller provides Product or system options, the user is responsible for determining that such data and specifications are suitable and sufficient for all applications and reasonably foreseeable uses of the Products or systems.

9. Loss to Buyer's Property. Any designs, tools, patterns, materials, drawings, confidential information or equipment furnished by Buyer or any other items which become Buyer's property, may be considered obsolete and may be destroyed by Seller after two consecutive years have elapsed without Buyer placing an order for the items which are manufactured using such property. Seller shall not be responsible for any loss or damage to such property while it is in Seller's possession or control.

10. Special Tooling. A tooling charge may be imposed for any special tooling, including without limitation, dies, fixtures, molds and patterns, acquired to manufacture Products.

Parker Hannifin Corporation
Instrumentation Products Division
Jacksonville, AL USA
http://www.parker.com/ipd

Such special tooling shall be and remain Seller's property notwithstanding payment of any charges by Buyer. In no event will Buyer acquire any interest in apparatus belonging to Seller which is utilized in the manufacture of the Products, even if such apparatus has been specially converted or adapted for such manufacture and notwithstanding any charges paid by Buyer. Unless otherwise agreed, Seller shall have the right to alter, discard or otherwise dispose of any special tooling or other property in its sole discretion at any time.

11. Buyer's Obligation; Rights of Seller. To secure payment of all sums due or otherwise, Seller shall retain a security interest in the goods delivered and this agreement shall be deemed a Security Agreement under the Uniform Commercial Code. Buyer authorizes Seller as its attorney to execute and file on Buyer's behalf all documents Seller deems necessary to perfect its security interest. Seller shall have a security interest in, and lien upon, any property of Buyer in Seller's possession as security for the payment of any amounts owed to Seller by Buyer.

12. Improper use and Indemnity. Buyer shall indemnify, defend, and hold Seller harmless from any claim, liability, damages, lawsuits, and costs (including attorney fees), whether for personal injury, property damage, patent, trademark or copyright infringement or any other claim, brought by or incurred by Buyer, Buyer's employees, or any other person, arising out of: (a) improper selection, improper application or other misuse of Products purchased by Buyer from Seller; (b) any act or omission, negligent or otherwise, of Buyer; (c) Seller's use of patterns, plans, drawings, or specifications furnished by Buyer to manufacture Product; or (d) Buyer's failure to comply with these terms and conditions. Seller shall not indemnify Buyer under any circumstance except as otherwise provided.

13. Cancellations and Changes. Orders shall not be subject to cancellation or change by Buyer for any reason, except with Seller's written consent and upon terms that will indemnify, defend and hold Seller harmless against all direct, incidental and consequential loss or damage. Seller may change product features, specifications, designs and availability with notice to Buyer.

14. Limitation on Assignment. Buyer may not assign its rights or obligations under this agreement without the prior written consent of Seller.

15. Entire Agreement. This agreement contains the entire agreement between the Buyer and Seller and constitutes the final, complete and exclusive expression of the terms of the agreement. All prior or contemporaneous written or oral agreements or negotiations with respect to the subject matter are herein merged.

16. Waiver and Severability. Failure to enforce any provision of this agreement will not waive that provision nor will any such failure prejudice Seller's right to enforce that provision in the future. Invalidation of any provision of this agreement by legislation or other rule of law shall not invalidate any other provision herein. The remaining provisions of this agreement will remain in full force and effect.

17. Termination. This agreement may be terminated by Seller for any reason and at any time by giving Buyer thirty (30) days written notice of termination. In addition, Seller may by written notice immediately terminate this agreement for the following: (a) Buyer commits a breach of any provision of this agreement (b) the appointment of a trustee, receiver or custodian for all or any part of Buyer's property (c) the filing of a petition for relief in bankruptcy of the other Party on its own behalf, or by a third party (d) an assignment for the benefit of creditors, or (e) the dissolution or liquidation of the Buyer.

18. Governing Law. This agreement and the sale and delivery of all Products hereunder shall be deemed to have taken place in and shall be governed and construed in accordance with the laws of the State of Ohio, as applicable to contracts executed and wholly performed therein and without regard to conflicts of laws principles. Buyer irrevocably agrees and consents to the exclusive jurisdiction and venue of the courts of Cuyahoga County, Ohio with respect to any dispute, controversy or claim arising out of or relating to this agreement. Disputes between the parties shall not be settled by arbitration unless, after a dispute has arisen, both parties expressly agree in writing to arbitrate the dispute.

19. Indemnity for Infringement of Intellectual Property Rights. Seller shall have no liability for infringement of any patents, trademarks, copyrights, trade dress, trade secrets or similar rights except as provided in this Section. Seller will defend and indemnify Buyer against allegations of infringement of U.S. patents, U.S. trademarks, copyrights, trade dress and trade secrets ("Intellectual Property Rights"). Seller will defend at its expense and will pay the cost of any settlement or damages awarded in an action brought against Buyer based on an allegation that a Product sold pursuant to this Agreement infringes the Intellectual Property Rights of a third party. Seller's obligation to defend and indemnify Buyer is contingent on Buyer notifying Seller within ten (10) days after Buyer becomes aware of such allegations of infringement, and Seller having sole control over the defense of any allegations or actions including all negotiations for settlement or compromise. If a Product is subject to a claim that it infringes the Intellectual Property Rights of a third party, Seller may, at its sole expense and option, procure for Buyer the right to continue using the Product, replace or modify the Product so as to make it noninfringing, or offer to accept return of the Product and return the purchase price less a reasonable allowance for depreciation. Notwithstanding the foregoing, Seller shall have no liability for claims of infringement based on information provided by Buyer, or directed to Products delivered hereunder for which the designs are specified in whole or part by Buyer, or infringements resulting from the modification, combination or use in a system of any Product sold hereunder. The foregoing provisions of this Section shall constitute Seller's sole and exclusive liability and Buyer's sole and exclusive remedy for infringement of Intellectual Property Rights.

20. Taxes. Unless otherwise indicated, all prices and charges are exclusive of excise, sales, use, property, occupational or like taxes which may be imposed by any taxing authority upon the manufacture, sale or delivery of Products.

21. Equal Opportunity Clause. For the performance of government contracts and where dollar value of the Products exceed $10,000, the equal employment opportunity clauses in Executive Order 11246, VEVRAA, and 41 C.F.R. §§ 60-1.4(a), 60-741.5(a), and 60-250.4, are hereby incorporated.

01/09

Parker Hannifin Corporation
Instrumentation Products Division
Jacksonville, AL USA
http://www.parker.com/ipd

Parker's Motion & Control Technologies

At Parker, we're guided by a relentless drive to help our customers become more productive and achieve higher levels of profitability by engineering the best systems for their requirements. It means looking at customer applications from many angles to find new ways to create value. Whatever the motion and control technology need, Parker has the experience, breadth of product and global reach to consistently deliver. No company knows more about motion and control technology than Parker. For further info call 1-800-C-Parker.

AEROSPACE

Key Markets
- Aircraft engines
- Business & general aviation
- Commercial transports
- Land-based weapons systems
- Military aircraft
- Missiles & launch vehicles
- Regional transports
- Unmanned aerial vehicles

Key Products
- Flight control systems & components
- Fluid conveyance systems
- Fluid metering delivery & atomization devices
- Fuel systems & components
- Hydraulic systems & components
- Inert nitrogen generating systems
- Pneumatic systems & components
- Wheels & brakes

CLIMATE CONTROL

Key Markets
- Agriculture
- Air conditioning
- Food, beverage & dairy
- Life sciences & medical
- Precision cooling
- Processing
- Transportation

Key Products
- CO^2 controls
- Electronic controllers
- Filter driers
- Hand shut-off valves
- Hose & fittings
- Pressure regulating valves
- Refrigerant distributors
- Safety relief valves
- Solenoid valves
- Thermostatic expansion valves

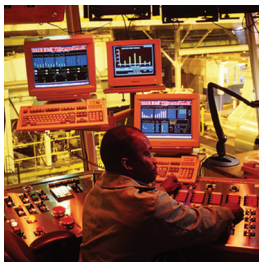

ELECTROMECHANICAL

Key Markets
- Aerospace
- Factory automation
- Life science & medical
- Machine tools
- Packaging machinery
- Paper machinery
- Plastics machinery & converting
- Primary metals
- Semiconductor & electronics
- Textile
- Wire & cable

Key Products
- AC/DC drives & systems
- Electric actuators, gantry robots & slides
- Electrohydrostatic actuation systems
- Electromechanical actuation systems
- Human machine interface
- Linear motors
- Stepper motors, servo motors, drives & controls
- Structural extrusions

FILTRATION

Key Markets
- Food & beverage
- Industrial machinery
- Life sciences
- Marine
- Mobile equipment
- Oil & gas
- Power generation
- Process
- Transportation

Key Products
- Analytical gas generators
- Compressed air & gas filters
- Condition monitoring
- Engine air, fuel & oil filtration & systems
- Hydraulic, lubrication & coolant filters
- Process, chemical, water & microfiltration filters
- Nitrogen, hydrogen & zero air generators

FLUID & GAS HANDLING

Key Markets
- Aerospace
- Agriculture
- Bulk chemical handling
- Construction machinery
- Food & beverage
- Fuel & gas delivery
- Industrial machinery
- Mobile
- Oil & gas
- Transportation
- Welding

Key Products
- Brass fittings & valves
- Diagnostic equipment
- Fluid conveyance systems
- Industrial hose
- PTFE & PFA hose, tubing & plastic fittings
- Rubber & thermoplastic hose & couplings
- Tube fittings & adapters
- Quick disconnects

HYDRAULICS

Key Markets
- Aerospace
- Aerial lift
- Agriculture
- Construction machinery
- Forestry
- Industrial machinery
- Mining
- Oil & gas
- Power generation & energy
- Truck hydraulics

Key Products
- Diagnostic equipment
- Hydraulic cylinders & accumulators
- Hydraulic motors & pumps
- Hydraulic systems
- Hydraulic valves & controls
- Power take-offs
- Rubber & thermoplastic hose & couplings
- Tube fittings & adapters
- Quick disconnects

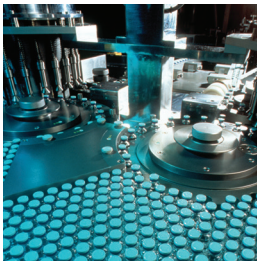

PNEUMATICS

Key Markets
- Aerospace
- Conveyor & material handling
- Factory automation
- Life science & medical
- Machine tools
- Packaging machinery
- Transportation & automotive

Key Products
- Air preparation
- Brass fittings & valves
- Manifolds
- Pneumatic accessories
- Pneumatic actuators & grippers
- Pneumatic valves & controls
- Quick disconnects
- Rotary actuators
- Rubber & thermoplastic hose & couplings
- Structural extrusions
- Thermoplastic tubing & fittings
- Vacuum generators, cups & sensors

PROCESS CONTROL

Key Markets
- **Chemical & refining**
- **Food, beverage & dairy**
- **Medical & dental**
- **Microelectronics**
- **Oil & gas**
- **Power generation**

Key Products
- **Analytical sample conditioning products & systems**
- **Fluoropolymer chemical delivery fittings, valves & pumps**
- **High purity gas delivery fittings, valves & regulators**
- **Instrumentation fittings, valves & regulators**
- **Medium pressure fittings & valves**
- **Process control manifolds**

SEALING & SHIELDING

Key Markets
- Aerospace
- Chemical processing
- Consumer
- Energy, oil & gas
- Fluid power
- General industrial
- Information technology
- Life sciences
- Military
- Semiconductor
- Telecommunications
- Transportation

Key Products
- Dynamic seals
- Elastomeric o-rings
- EMI shielding
- Extruded & precision-cut, fabricated elastomeric seals
- Homogeneous & inserted elastomeric shapes
- High temperature metal seals
- Metal & plastic retained composite seals
- Thermal management

Parker

ENGINEERING YOUR SUCCESS.

Parker Worldwide

AE – UAE, Dubai
Tel: +971 4 8875600
parker.me@parker.com

AR – Argentina, Buenos Aires
Tel: +54 3327 44 4129
falecom@parker.com

AT – Austria, Wiener Neustadt
Tel: +43 (0)2622 23501-0
parker.austria@parker.com

AT – Eastern Europe, Wiener Neustadt
Tel: +43 (0)2622 23501 970
parker.easteurope@parker.com

AU – Australia, Dandenong
Tel: +61 (0)3 9768 5555
customer.service.au@parker.com

AZ – Azerbaijan, Baku
Tel: +994 50 2233 458
parker.azerbaijan@parker.com

BE/LX – Belgium, Nivelles
Tel: +32 (0)67 280 900
parker.belgium@parker.com

BR – Brazil, Sao Jose dos Campos
Tel: +55 12 4009 3504
falecom@parker.com

BY – Belarus, Minsk
Tel: +375 17 209 9399
parker.belarus@parker.com

CA – Canada, Grimsby, Ontario
Tel +1 905-945-2274
ipd_canada@parker.com

CH – Switzerland, Etoy
Tel: +41 (0) 21 821 02 30
parker.switzerland@parker.com

CL – Chile, Santiago
Tel: +56 (0) 2 2303 9640
falecom@parker.com

CN – China, Shanghai
Tel: +86 21 2899 5000
INGtechnical.china@parker.com

CZ – Czech Republic, Klecany
Tel: +420 284 083 111
parker.czechrepublic@parker.com

DE – Germany, Kaarst
Tel: +49 (0)2131 4016 0
parker.germany@parker.com

DK – Denmark, Ballerup
Tel: +45 43 56 04 00
parker.denmark@parker.com

ES – Spain, Madrid
Tel: +34 902 33 00 01
parker.spain@parker.com

FI – Finland, Vantaa
Tel: +358 (0)20 753 2500
parker.finland@parker.com

FR – France, Contamine s/Arve
Tel: +33 (0)4 50 25 80 25
parker.france@parker.com

GR – Greece, Athens
Tel: +30 210 933 6450
parker.greece@parker.com

HU – Hungary, Budapest
Tel: +36 1 220 4155
parker.hungary@parker.com

ID – Indonesia, Tangerang
Tel: +62 (0)21 7588 1906
parker.id@parker.com

IE – Ireland, Dublin
Tel: +353 (0)1 466 6370
parker.ireland@parker.com

IN – India, Mumbai
Tel: +91 22 6513 7081-85

IT – Italy, Corsico (MI)
Tel: +39 02 45 19 21
parker.italy@parker.com

JP – Japan, Tokyo
Tel: +(81) 3 6408 3900
infophj@parker.com

KR – South Korea, Seoul
Tel: +82 2 559 0400
parkerkr@parker.com

KZ – Kazakhstan, Almaty
Tel: +7 7272 505 800
parker.easteurope@parker.com

LV – Latvia, Riga
Tel: +371 6 745 2601
parker.latvia@parker.com

MX – Mexico, Toluca
Tel: +52 722 275 4200
contacto@parker.com

MY – Malaysia, Selangor
Tel: +603 784 90 800
parkermy@parker.com

NL – The Netherlands, Oldenzaal
Tel: +31 (0)541 585 000
parker.nl@parker.com

NO – Norway, Stavanger
Tel: +47 (0)51 826 300
parker.norway@parker.com

NZ – New Zealand, Mt Wellington
Tel: +64 9 574 1744

PL – Poland, Warsaw
Tel: +48 (0)22 573 24 00
parker.poland@parker.com

PT – Portugal, Leca da Palmeira
Tel: +351 22 999 7360
parker.portugal@parker.com

RO – Romania, Bucharest
Tel: +40 21 252 1382
parker.romania@parker.com

RU – Russia, Moscow
Tel: +7 495 645-2156
parker.russia@parker.com

SE – Sweden, Spånga
Tel: +46 (0)8 59 79 50 00
parker.sweden@parker.com

SG – Singapore,
Tel: +65 6887 6300
parkersg@parker.com

SK – Slovakia, Banská Bystrica
Tel: +421 484 162 252
parker.slovakia@parker.com

SL – Slovenia, Novo Mesto
Tel: +386 7 337 6650
parker.slovenia@parker.com

TH – Thailand, Bangkok
Tel: +66 2 186 7000
phthailand@parker.com

TR – Turkey, Istanbul
Tel: +90 216 4997081
parker.turkey@parker.com

TW – Taiwan, Taipei
Tel: +886 2 2298 8987
enquiry.taiwan@parker.com

UA – Ukraine, Kiev
Tel: +380 44 494 2731
parker.ukraine@parker.com

UK – United Kingdom, Warwick
Tel: +44 (0)1926 317878
parker.uk@parker.com

USA – IPD, Huntsville
Tel: +1 256 881 2040
ipdcct@parker.com

USA – Autoclave Engineers, Erie
Tel: +1 814 860 5700
ipdaecct@parker.com

VN – Vietnam, Hochi Minh City
Tel: +84 (0)8337 546 51
parker_viet@parker.com

ZA – South Africa, Kempton Park
Tel: +27 (0)11 961 0700
parker.southafrica@parker.com

WARNING

FAILURE, IMPROPER SELECTION OR IMPROPER USE OF THE PRODUCTS AND/OR SYSTEMS DESCRIBED HEREIN OR RELATED ITEMS CAN CAUSE DEATH, PERSONAL INJURY AND PROPERTY DAMAGE.

This document and other information from Parker Hannifin Corporation, its subsidiaries and authorized distributors provide product and/or system options for further investigation by users having technical expertise. It is important that you analyze all aspects of your application and review the information concerning the product or system in the current product catalog. Due to the variety of operating conditions and applications for these products or systems, the user, through its own analysis and testing, is solely responsible for making the final selection of the products and systems and assuring that all performance, safety and warning requirements of the application are met. The products described herein, including without limitation, product features, specifications, designs, availability and pricing, are subject to change by Parker Hannifin Corporation and its subsidiaries at any time without notice.

Offer of Sale

The items described in this document are available for sale by Parker Hannifin Corporation, its subsidiaries or its authorized distributors. Any sale contract entered by Parker will be governed by the provisions stated in Parker's standard terms and conditions of sale (copy available upon request).

© 2019 Parker Hannifin Corporation. All rights reserved.

Catalog 4110-NV June 2019

Parker Hannifin Corporation
Instrumentation Products Division
2651 Alabama Highway 21 North
Jacksonville, AL 36265-9681
phone 256 435 2130
fax 256 435 7718
www.parker.com/ipd

Authorized Distributor
MONILEK OILFIELD
E: sales@monilek.com
W: www.monilekgroup.com