Authorized Distributor
MONILEK OILFIELD

E: sales@monilek.com
W: www.monilekgroup.com

20,000 psi (1379 bar) Needle and Ball Valves

Catalog 4190-HH/20K

aerospace
climate control
electromechanical
filtration
fluid & gas handling
hydraulics
pneumatics
process control
sealing & shielding

ENGINEERING YOUR SUCCESS.

Contents

Page 4 ..... **Introduction : Needle Valve**

Page 5 ..... **Design Features**

Page 6 ..... **Construction**

Page 7 ..... **Introduction : Ball Valve**

Page 8 ..... **Design Features**

Page 9 ..... **Construction**

Page 10 ..... **Available End Connections**

Page 11 ..... **How to Order**

⚠ WARNING

FAILURE, IMPROPER SELECTION OR IMPROPER USE OF THE PRODUCTS AND/OR SYSTEMS DESCRIBED HEREIN OR RELATED ITEMS CAN CAUSE DEATH, PERSONAL INJURY AND PROPERTY DAMAGE.

This document and other information from Parker Hannifin Corporation, its subsidiaries or its authorized distributors provide product and/or system options for further investigation by users having technical expertise. It is important that you analyze all aspects of your application and review the information concerning the product or system in the current product catalog. Due to the variety of operating conditions and applications for these products or systems, the user, through its own analysis and testing, is solely responsible for making the final selection of the products and systems and assuring that all performance, safety and warning requirements of the application are met.
The products described herein, including without limitation, product features, specifications, designs, availability and pricing, are subject to change by Parker Hannifin Corporation and its subsidiaries at any time without notice.

Offer of Sale

The items described in this document are available for sale by Parker Hannifin Corporation, its subsidiaries or its authorized distributors. Any sale contract entered into by Parker will be governed by the provisions stated in Parker's standard terms and conditions of sale (copy available upon request).

Introduction - Needle Valve

The Parker 20K H-Series needle valve has been purpose designed for operation with any fluid up to 20,000 psi (1379 bar) rating. Complete with standard PTFE gland packing and non rotational tip gives the user assurance of total in service sealing security. 100% repeatable bubble tight shut off and Tru-Loc® gland adjuster security are key features of this design. A range of end connections are offered including Phastite® and Cone & Thread, with additional options for NACE compatible and heat code traceable materials.

Features

- **All valves 100% factory tested**
- **Inlet & outlet connections on same plane for ease of installation**
- **PTFE packing**
- **Non rotating spindle tip for bubble tight shut off**
- **Externally adjustable packing**
- **NACE compatible option**
- **Operating threads outside washout area**
  - No pressure retaining threads in contact with media
- **Fine threaded stem raiser gives increased stem sensitivity and accuracy**
- **Tru-Loc® anti-vibration locking system on gland adjuster for 100% security**
- **HCT available on all wetted parts**
- **Alternative material options available on request**
- **Panel and side mounting as standard**

Specifications

- **316 Stainless steel construction as standard**
- **Maximum cold working pressure rating - 20,000 psi (1379 bar)**
- **PTFE standard gland packing with PEEK anti-extrusion rings**
- **Max Cv 0.66 (dependent on fitting size)**
- **Temperature rating -54°C to +200°C (-65.2°F to +392°F)***

  *refer to P/T graph below

Pressure & Temperature Curve

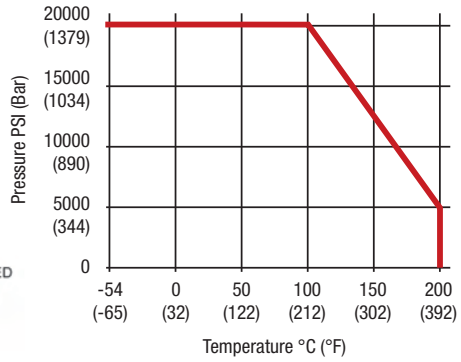

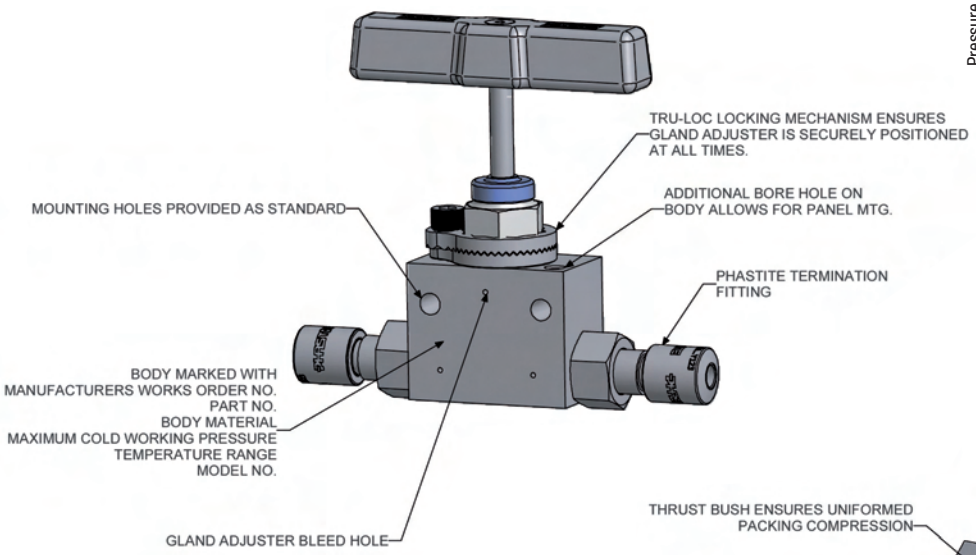

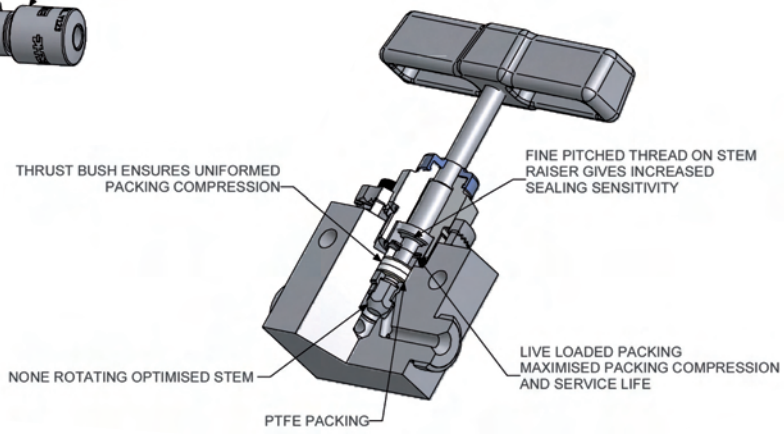

Design Features

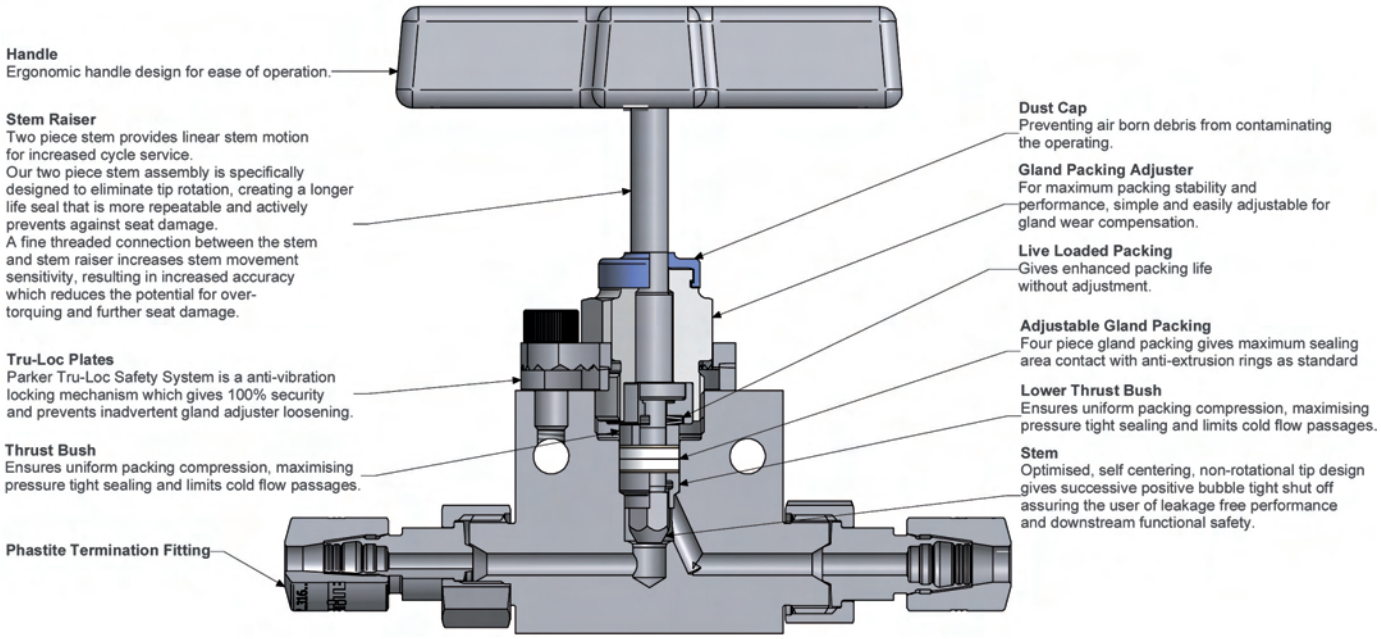

Standard Range Part Numbers

Part no.	Inlet Female	Outlet Female	Orifice Size mm (inch)	Max Cv Rating	Dimension A mm (inch)	B mm (inch)	C mm (inch)	D mm (inch)	E mm (inch)	F mm (inch)	G mm (inch)	H mm (inch)
Cone and Thread												
20KNVS4CT	1/4" C&T	1/4" C&T	2.8 (0.11)	0.14	50.8 (2.00)	28.6 (1.13)	113.2 (4.46)	41.3 (1.63)	31.8 (1.25)	12.0 (0.47)	82.7 (3.26)	36.0 (1.42)
20KNVS6CT	3/8" C&T	3/8" C&T	5.0 (0.20)	0.50	63.5 (2.50)	28.6 (1.13)	116.4 (4.58)	44.5 (1.75)	33.0 (1.30)	12.0 (0.47)	82.7 (3.26)	36.0 (1.42)
20KNVS9CT	9/16" C&T	9/16" C&T	6.0 (0.24)	0.66	76.2 (3.00)	28.6 (1.13)	122.7 (4.83)	50.8 (2.00)	36.5 (1.44)	12.0 (0.47)	82.7 (3.26)	36.0 (1.42)
Phastite												
20KNVS4PH	1/4" PH	1/4" PH	3.7 (0.15)	0.14	66.0 (2.60)	28.6 (1.13)	116.4 (4.58)	44.5 (1.75)	31.8 (1.25)	12.0 (0.47)	82.7 (3.26)	36.0 (1.42)
20KNVS6PH	3/8" PH	3/8" PH	6.0 (0.24)	0.50	66.0 (2.60)	28.6 (1.13)	122.7 (4.83)	50.8 (2.00)	34.9 (1.38)	12.0 (0.47)	82.7 (3.26)	36.0 (1.42)
20KNVS8PH	1/2" PH	1/2" PH	6.0 (0.24)	0.66	66.0 (2.60)	28.6 (1.13)	122.7 (4.83)	50.8 (2.00)	34.9 (1.38)	12.0 (0.47)	82.7 (3.26)	36.0 (1.42)
20KNVSM6PH	6 mm PH	6 mm PH	3.7 (0.15)	0.35	66.0 (2.60)	28.6 (1.13)	116.4 (4.58)	44.5 (1.75)	31.8 (1.25)	12.0 (0.47)	82.7 (3.26)	36.0 (1.42)
20KNVSM8PH	8 mm PH	8 mm PH	4.7 (0.19)	0.60	66.0 (2.60)	28.6 (1.13)	122.7 (4.83)	50.8 (2.00)	34.9 (1.38)	12.0 (0.47)	82.7 (3.26)	36.0 (1.42)
20KNVSM10PH	10 mm PH	10 mm PH	6.0 (0.24)	0.66	66.0 (2.60)	28.6 (1.13)	122.7 (4.83)	50.8 (2.00)	34.9 (1.38)	12.0 (0.47)	82.7 (3.26)	36.0 (1.42)
20KNVSM12PH	12 mm PH	12 mm PH	6.0 (0.24)	0.66	66.0 (2.60)	28.6 (1.13)	122.7 (4.83)	50.8 (2.00)	34.9 (1.38)	12.0 (0.47)	82.7 (3.26)	36.0 (1.42)
20KNVSM14PH	14 mm PH	14 mm PH	6.0 (0.24)	0.66	66.0 (2.60)	28.6 (1.13)	122.7 (4.83)	50.8 (2.00)	34.9 (1.38)	12.0 (0.47)	82.7 (3.26)	36.0 (1.42)

Other materials and connection options are available. The actual pressure ratings for any alternative option will vary from those stated - please consult with factory for your specific requirements.

The specification of any alternative material, connection or tubing is critical to the overall performance of the system. Caution should be exercised by the user to ensure proper selection in accordance with actual operating or design conditions.

Valves with Phastite® connections are recommended for use with 316/316L tubing conforming to ASTM A-269, having a hardness not exceeding 90HRB.

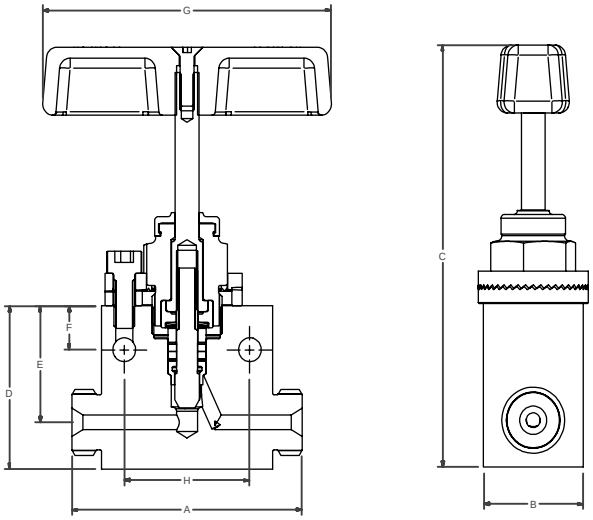

All dimensions to outer body

Construction

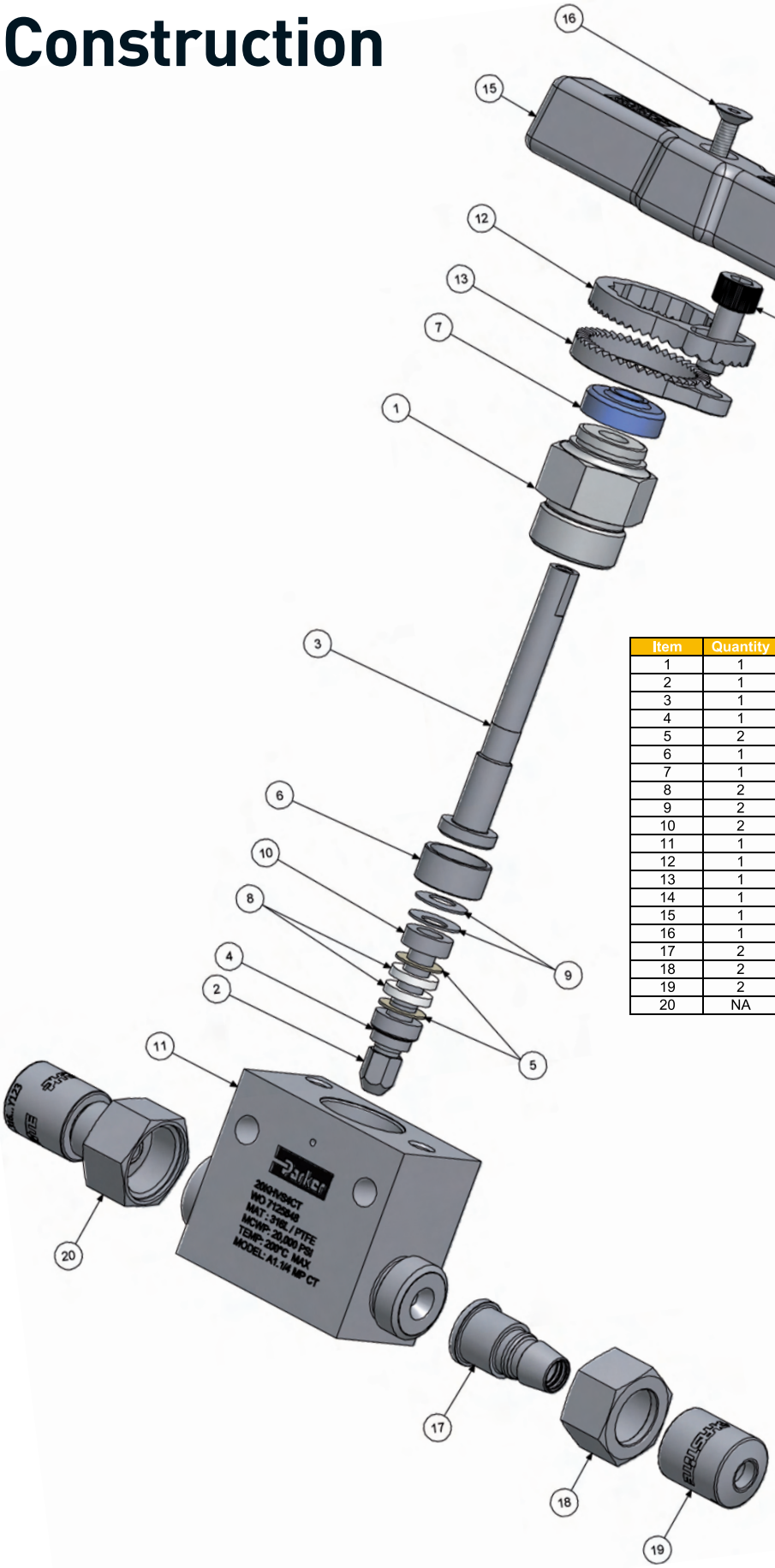

Item	Quantity	Part Description	Material
1	1	Gland Adjuster	ASTM A 479 Type 316
2	1	Stem	ASTM A 564 Type 17-4 PH
3	1	Stem Raiser	NES 833 Aluminium Bronze
4	1	Lower Thrust Bush	ASTM A 479 Type 316
5	2	Thrust Seal	PEEK
6	1	Stem Carrier	316 Stainless Steel
7	1	Dust Cap	Polymer
8	2	Gland Packing	Virgin PTFE
9	2	Spring Washer	316 Stainless Steel
10	2	Upper Thrust Bush	ASTM A 479 Type 316
11	1	Body	ASTM A 479 Type 316
12	1	Upper Tru-loc Plate	316 Stainless Steel
13	1	Lower Tru-loc Plate	316 Stainless Steel
14	1	Socket Cap Screw	316 Stainless Steel
15	1	Handle	316 Stainless Steel
16	1	C/S Screw	316 Stainless Steel
17	2	Phastite Ferrule	ASTM A 479 Type 316
18	2	Termination Nut	ASTM A 479 Type 316
19	2	Phastite Collar	ASTM A 479 Type 316
20	NA	Phastite Termination Fitting	NA

Introduction - Ball Valve

The Parker 20K Hi-Pro Ball Valve is a two piece bi-directional ball valve designed for cold working pressure applications of up to 20,000 psi (1379 bar) rating, giving continuous repeatable performance. They are suitable for the most demanding applications in the oil, gas and process control industries with the option for bracket or panel mounting as standard across the range. 100% repeatable bubble tight shut off, user friendly design and Tru-Loc® gland adjuster security are key features of this design that help distinguish our 20K Ball Valves against others. A range of end connections are offered including Phastite® and Cone & Thread, with additional options for NACE compatible and heat code traceable materials.

Features

- **Two piece body design minimises leakage paths**
- **Safe installation process**
- **Bi-directional**
- **PEEK standard ball seats material**
- **PTFE packing**
- **Bubble tight shutoff**
- **Floating ball principal with dynamic response seats**
- **Low torque operation**
- **Quarter turn positive stop handle with ergonomically designed protective sleeve**
- **Adjustable packing**
- **Full hydrostatic and low pressure air tested**
- **Connector thread environmentally sealed**
- **Various integral connections available**
- **Tru-Loc® anti-vibration locking system on gland adjuster for 100% security**
- **All valves 100% factory tested**
- **NACE compatible option**
- **HCT available on all wetted parts**
- **Alternative materials options available on request**
- **Panel and side mounting as standard**

Specifications

- **316 Stainless steel construction as standard**
- **Maximum cold working pressure rating**
- **20,000 psi (1379 bar) with PEEK seats**
- **Max Cv 1.56 (dependent on fitting size)**
- **Temperature rating PEEK seats - 20°C to +200°C (-4°F to +392°F)***

*refer to P/T graph below

Pressure & Temperature Curve

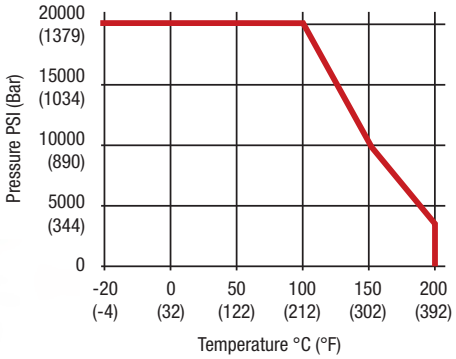

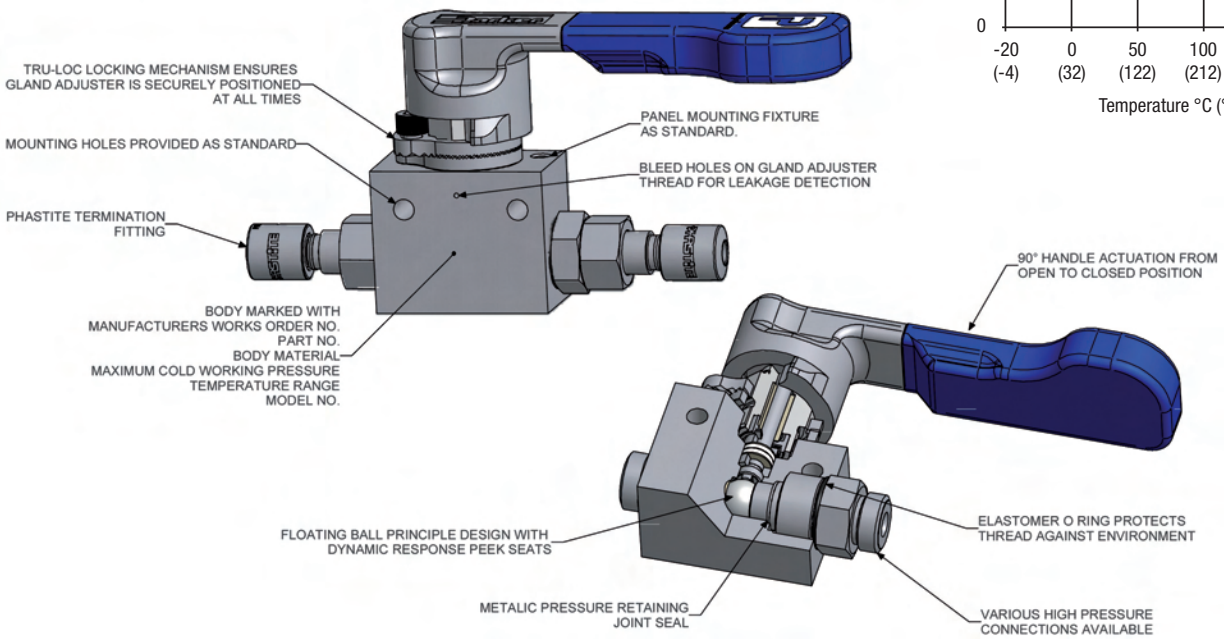

Design Features

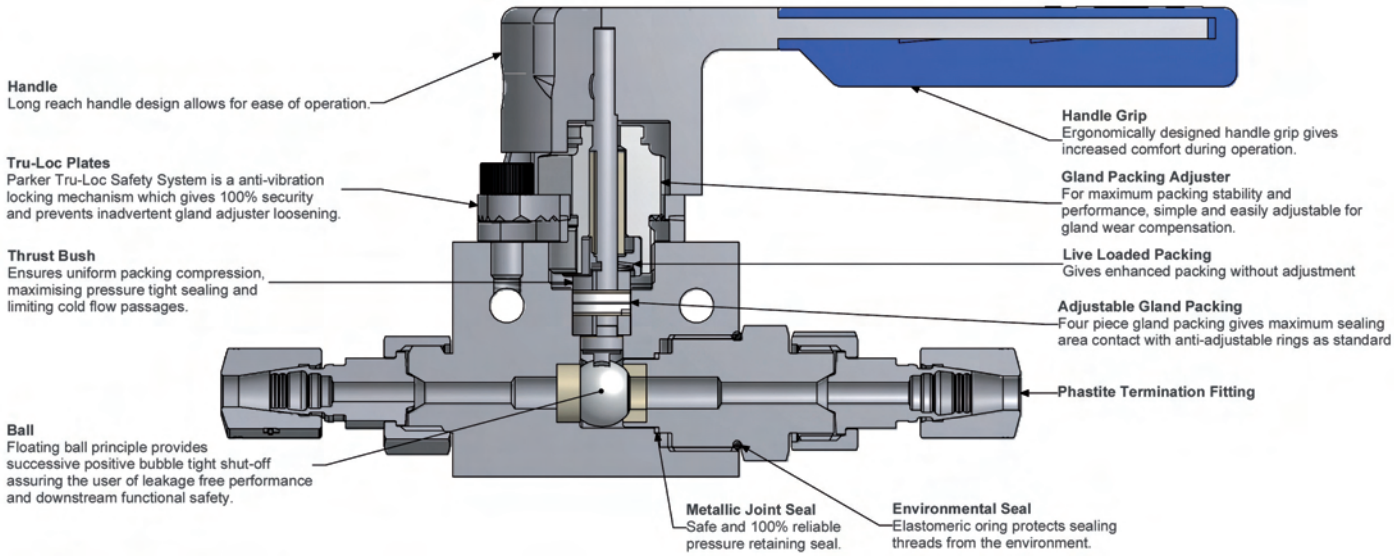

Standard Range Part Numbers

Part no.	Inlet	Outlet	Orifice Size	Max Cv	Dimension								
	Female	Female	mm (inch)	Rating	A mm (inch)	B mm (inch)	C mm (inch)	D mm (inch)	E mm (inch)	F mm (inch)	G mm (inch)	H mm (inch)	I mm (inch)
Cone and Thread													
20KBVS4CT	1/4" C&T	1/4" C&T	2.8 (0.11)	0.25	89.1 (3.50)	31.8 (1.25)	75.6 (2.98)	56.0 (2.21)	36.0 (1.42)	15.9 (0.63)	32.5 (1.28)	44.5 (1.75)	120.5 (4.74)
20KBVS6CT	3/8" C&T	3/8" C&T	5.0 (0.20)	0.97	89.1 (3.50)	31.8 (1.25)	76.6 (3.02)	58.5 (2.30)	36.0 (1.42)	15.9 (0.63)	32.5 (1.28)	44.5 (1.75)	120.5 (4.74)
20KBVS9CT	9/16" C&T	9/16" C&T	6.0 (0.24)	1.56	89.1 (3.50)	31.8 (1.25)	89.6 (3.53)	63.5 (2.50)	36.0 (1.42)	15.9 (0.63)	32.5 (1.28)	44.5 (1.75)	120.5 (4.74)
Phastite													
20KBVS4PH	1/4" PH	1/4" PH	3.7 (0.15)	0.50	89.1 (3.50)	31.8 (1.25)	82.3 (3.24)	54.3 (2.14)	36.0 (1.42)	15.9 (0.63)	32.5 (1.28)	44.5 (1.75)	120.5 (4.74)
20KBVS6PH	3/8" PH	3/8" PH	6.0 (0.24)	1.56	89.1 (3.50)	31.8 (1.25)	78.1 (3.08)	51.0 (2.01)	36.0 (1.42)	15.9 (0.63)	32.5 (1.28)	44.5 (1.75)	120.5 (4.74)
20KBVS8PH	1/2" PH	1/2" PH	6.0 (0.24)	1.56	89.1 (3.50)	31.8 (1.25)	80.0 (3.15)	51.0 (2.01)	36.0 (1.42)	15.9 (0.63)	32.5 (1.28)	44.5 (1.75)	120.5 (4.74)
20KBVSM6PH	6 mm PH	6 mm PH	3.7 (0.15)	0.50	89.1 (3.50)	31.8 (1.25)	82.3 (3.24)	54.3 (2.14)	36.0 (1.42)	15.9 (0.63)	32.5 (1.28)	44.5 (1.75)	120.5 (4.74)
20KBVSM8PH	8 mm PH	8 mm PH	4.7 (0.19)	0.90	89.1 (3.50)	31.8 (1.25)	78.1 (3.08)	51.0 (2.01)	36.0 (1.42)	15.9 (0.63)	32.5 (1.28)	44.5 (1.75)	120.5 (4.74)
20KBVSM10PH	10 mm PH	10 mm PH	6.0 (0.24)	1.56	89.1 (3.50)	31.8 (1.25)	78.1 (3.08)	51.0 (2.01)	36.0 (1.42)	15.9 (0.63)	32.5 (1.28)	44.5 (1.75)	120.5 (4.74)
20KBVSM12PH	12 mm PH	12 mm PH	6.0 (0.24)	1.56	89.1 (3.50)	31.8 (1.25)	80.0 (3.15)	51.0 (2.01)	36.0 (1.42)	15.9 (0.63)	32.5 (1.28)	44.5 (1.75)	120.5 (4.74)
20KBVSM14PH	14 mm PH	14 mm PH	6.0 (0.24)	1.56	89.1 (3.50)	31.8 (1.25)	79.1 (3.11)	51.0 (2.01)	36.0 (1.42)	15.9 (0.63)	32.5 (1.28)	44.5 (1.75)	120.5 (4.74)

Other materials and connection options are available. The actual pressure ratings for any alternative option will vary from those stated - please consult with factory for your specific requirements.

The specification of any alternative material, connection or tubing is critical to the overall performance of the system. Caution should be exercised by the user to ensure proper selection in accordance with actual operating or design conditions.

Valves with Phastite® connections are recommended for use with 316/316L tubing conforming to ASTM A-269, having a hardness not exceeding 90HRB.

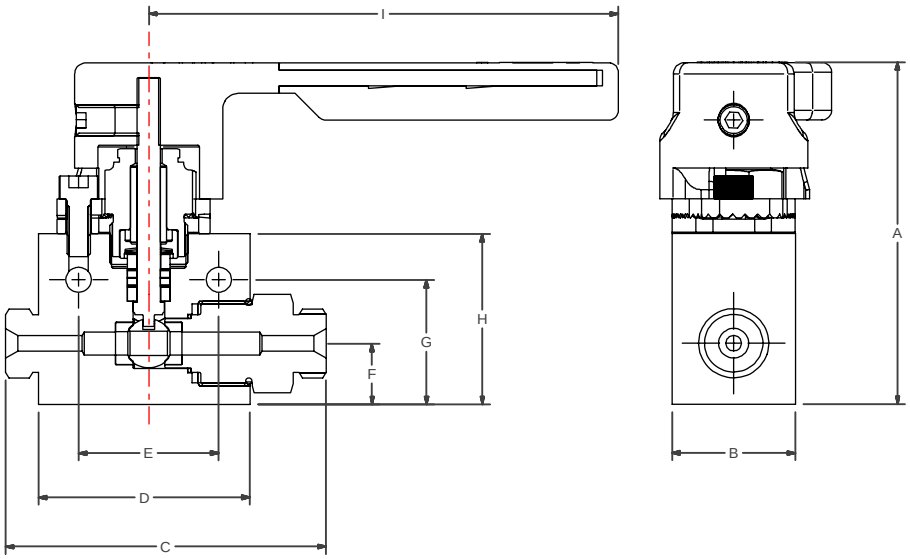

All dimensions to outer body

Construction

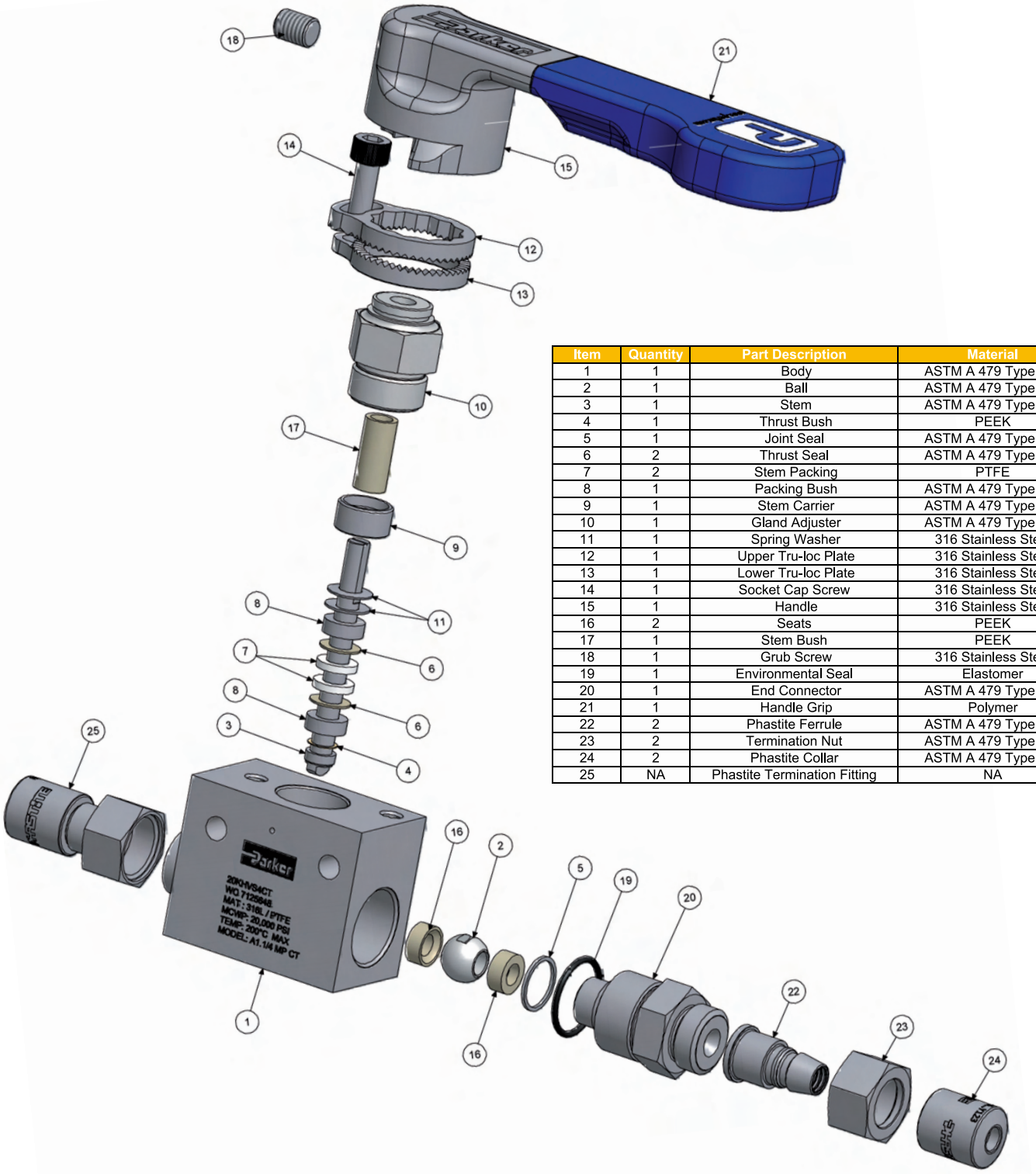

Item	Quantity	Part Description	Material
1	1	Body	ASTM A 479 Type 316
2	1	Ball	ASTM A 479 Type 316
3	1	Stem	ASTM A 479 Type 316
4	1	Thrust Bush	PEEK
5	1	Joint Seal	ASTM A 479 Type 316
6	2	Thrust Seal	ASTM A 479 Type 316
7	2	Stem Packing	PTFE
8	1	Packing Bush	ASTM A 479 Type 316
9	1	Stem Carrier	ASTM A 479 Type 316
10	1	Gland Adjuster	ASTM A 479 Type 316
11	1	Spring Washer	316 Stainless Steel
12	1	Upper Tru-loc Plate	316 Stainless Steel
13	1	Lower Tru-loc Plate	316 Stainless Steel
14	1	Socket Cap Screw	316 Stainless Steel
15	1	Handle	316 Stainless Steel
16	2	Seats	PEEK
17	1	Stem Bush	PEEK
18	1	Grub Screw	316 Stainless Steel
19	1	Environmental Seal	Elastomer
20	1	End Connector	ASTM A 479 Type 316
21	1	Handle Grip	Polymer
22	2	Phastite Ferrule	ASTM A 479 Type 316
23	2	Termination Nut	ASTM A 479 Type 316
24	2	Phastite Collar	ASTM A 479 Type 316
25	NA	Phastite Termination Fitting	NA

Available End Connections

Phastite®

Phastite® is the perfect partner for both the 20K Hi-Pro Ball Valve and 20K H-Series Needle Valve. It's a breakthrough in tube connection systems with an innovative design concept that combines quick installation with a simple assembly process. Phastite® is manufactured from standard materials and requires no special processes to be adopted.

Design

Phastite® has been specifically designed to meet ever-increasing industry standards and demands with regards to tube connectors and pressure containment. The latest CAE and FEA techniques have been employed to optimise the design of the connectors and assembly tooling.

Simple make-up

Consistent make-up to a pre-determined stop face on the body. This reduces the possibility of any incorrect make-up.

Increased Safety

Phastite's simple assembly process dramatically reduces the number of operations needed to assemble a leak free joint. Simply insert the tubing into the pre-assembled connector. The Phastite® tooling delivers a leak free connection first time – every time.

Vibration tolerant

Phastite® provides a permanent leak free connection. There are no threaded components, removing potential loosening problems in vibration applications.

No loose parts

Phastite® connectors are supplied pre-assembled, no loose parts and no disassembling needed by the installer. This eliminates assembly errors, as there are no parts to lose or incorrectly assemble.

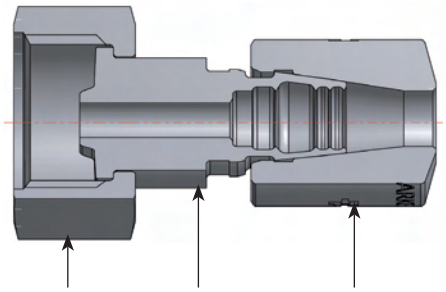

Valves with Phastite® connections are designed and recommended for use with 316/316L tubing conforming to ASTM A-269, having a hardness not exceeding 90HRB.

Further information on Phastite® can be found in our technical catalogue 4235-PH.

Cone & Thread 20,000 PSI Fittings

All valves required with cone and thread fittings are supplied complete with glands and collars, to meet the industry standard requirement for Autoclave style medium pressure 20,000 PSI connections.

It is the users responsibility to select the appropriate medium pressure 20,000 psi tubing, being 1/8 hard 316 seamless stainless steel tubing and designed to work with Autoclave style fittings.

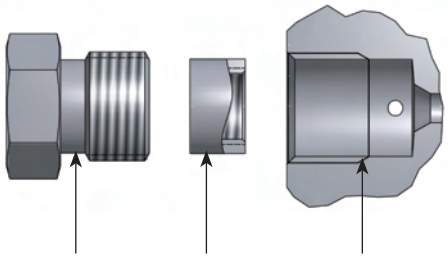

How to Order

The correct part number is easily derived from the following number sequence. The five product characteristics required are coded as shown below.

20K	–	NV	–	S	–	M6PH	–	NC
Valve Series		Valve Type		Body Material		Connection Size & Type		Available Options
20K		**NV** Needle Valve **BV** Ball Valve		**S** Stainless Steel		**4CT** 1/4" CT **6CT** 3/8" CT **9CT** 9/16" CT **4PH** 1/4" PH **6PH** 3/8" PH **8PH** 1/2" PH **M6PH** 6 mm PH **M8PH** 8 mm PH **M10PH** 10 mm PH **M12PH** 12 mm PH **M14PH** 14 mm PH		**NC** NACE† **HCT** Heat Code Traceability

* Leave blank if not required

† Consult with factory

Examples

20K	–	NV	–	S	–	M6PH	–	HCT
Valve Series		Valve Type		Body Material		Connection Size & Type		Available Options

Describes a 20K Needle valve in stainless steel construction, equipped with 6mm Phastite® inlet and outlet. Supplied with Heat Code Traceability marking on all wetted parts.

20K	–	BV	–	S	–	4CT	–	NC
Valve Series		Valve Type		Body Material		Connection Size & Type		Available Options

Describes a 20K Ball Valve in stainless steel construction, equipped with 1/4" Cone & Thread inlet and outlet. Supplied with NACE Certification.

Parker Worldwide

AE – UAE, Dubai
Tel: +971 4 8875600
parker.me@parker.com

AR – Argentina, Buenos Aires
Tel: +54 3327 44 4129

AT – Austria, Wiener Neustadt
Tel: +43 (0)2622 23501-0
parker.austria@parker.com

AT – Eastern Europe,
Wiener Neustadt
Tel: +43 (0)2622 23501 970
parker.easteurope@parker.com

AU – Australia, Castle Hill
Tel: +61 (0)2-9634 7777

AZ – Azerbaijan, Baku
Tel: +994 50 2233 458
parker.azerbaijan@parker.com

BE/LX – Belgium, Nivelles
Tel: +32 (0)67 280 900
parker.belgium@parker.com

BR – Brazil, Cachoeirinha RS
Tel: +55 51 3470 9144

BY – Belarus, Minsk
Tel: +375 17 209 9399
parker.belarus@parker.com

CA – Canada, Milton, Ontario
Tel: +1 905 693 3000

CH – Switzerland, Etoy
Tel: +41 (0) 21 821 02 30
parker.switzerland@parker.com

CN – China, Shanghai
Tel: +86 21 5031 2525

CZ – Czech Republic, Klecany
Tel: +420 284 083 111
parker.czechrepublic@parker.com

DE – Germany, Kaarst
Tel: +49 (0)2131 4016 0
parker.germany@parker.com

DK – Denmark, Ballerup
Tel: +45 43 56 04 00
parker.denmark@parker.com

ES – Spain, Madrid
Tel: +34 902 33 00 01
parker.spain@parker.com

FI – Finland, Vantaa
Tel: +358 (0)20 753 2500
parker.finland@parker.com

FR – France, Contamine s/Arve
Tel: +33 (0)4 50 25 80 25
parker.france@parker.com

GR – Greece, Athens
Tel: +30 210 933 6450
parker.greece@parker.com

HK – Hong Kong
Tel: +852 2428 8008

HU – Hungary, Budapest
Tel: +36 1 220 4155
parker.hungary@parker.com

IE – Ireland, Dublin
Tel: +353 (0)1 466 6370
parker.ireland@parker.com

IN – India, Mumbai
Tel: +91 22 6513 7081-85

IT – Italy, Corsico (MI)
Tel: +39 02 45 19 21
parker.italy@parker.com

JP – Japan, Fujisawa
Tel: +(81) 4 6635 3050

KR – South Korea, Seoul
Tel: +82 2 559 0400

KZ – Kazakhstan, Almaty
Tel: +7 7272 505 800
parker.easteurope@parker.com

LV – Latvia, Riga
Tel: +371 6 745 2601
parker.latvia@parker.com

MX – Mexico, Apodaca
Tel: +52 81 8156 6000

MY – Malaysia, Subang Jaya
Tel: +60 3 5638 1476

NL – The Netherlands,
Oldenzaal
Tel: +31 (0)541 585 000
parker.nl@parker.com

NO – Norway, Stavanger
Tel: +47 (0)51 826 300
parker.norway@parker.com

NZ – New Zealand, Mt Wellington
Tel: +64 9 574 1744

PL – Poland, Warsaw
Tel: +48 (0)22 573 24 00
parker.poland@parker.com

PT – Portugal, Leca da Palmeira
Tel: +351 22 999 7360
parker.portugal@parker.com

RO – Romania, Bucharest
Tel: +40 21 252 1382
parker.romania@parker.com

RU – Russia, Moscow
Tel: +7 495 645-2156
parker.russia@parker.com

SE – Sweden, Spånga
Tel: +46 (0)8 59 79 50 00
parker.sweden@parker.com

SG – Singapore
Tel: +65 6887 6300

SK – Slovakia, Banská Bystrica
Tel: +421 484 162 252
parker.slovakia@parker.com

SL – Slovenia, Novo Mesto
Tel: +386 7 337 6650
parker.slovenia@parker.com

TH – Thailand, Bangkok
Tel: +662 717 8140

TR – Turkey, Istanbul
Tel: +90 216 4997081
parker.turkey@parker.com

TW – Taiwan, Taipei
Tel: +886 2 2298 8987

UA – Ukraine, Kiev
Tel +380 44 494 2731
parker.ukraine@parker.com

UK – United Kingdom,
Barnstaple
Tel: +44 (0)1271 313131
parker.uk@parker.com

US – USA, Cleveland
Tel: +1 216 896 3000

VE – Venezuela, Caracas
Tel: +58 212 238 5422

ZA – South Africa,
Kempton Park
Tel: +27 (0)11 961 0700
parker.southafrica@parker.com

European Product Information Centre
Free phone: 00 800 27 27 5374
(from AT, BE, CH, CZ, DE, DK, EE, EI, ES, FI, FR, IT, NL, NO, PL, RU, SE, SK, UK, ZA)

© 2008 Parker Hannifin Corporation. All rights reserved.

Parker Hannifin Ltd
Instrumentation Products Division
Riverside Road, Pottington Business Park
Barnstaple, Devon, EX31 1NP
United Kingdom
Tel.:+44 (0) 1271 313131
Fax: +44 (0) 1271 373636
www.parker.com/ipd

Authorized Distributor
MONILEK OILFIELD
E: sales@monilek.com
W: www.monilekgroup.com