MPI™ SERIES

Medium Pressure Compression

Valves, Fittings, and Tubing

Pressures to 15,000 psi and 20,000 psi *(1034- 1378 bar)*

Catalog 4234-MA | November 2025

Authorized Distributor
MONILEK OILFIELD
MONILEK OILFIELD
E: sales@monilek.com
W: www.monilekgroup.com

Parker

SuparShield™

Parker's Next Generation Corrosion Management Technology for Cold Worked Stainless Steels

Parker Instrumentation Products Division provides highly engineered pressure and temperature process control instrumentation and systems. These range from compression tube fittings, cone and thread fittings, needle valves, ball valves, compact stream switching valves to modular process to instrument valve packages. These items are all developed and manufactured to increase our customer's up-time, maintain safety, improve production and quality control.

Industries and Markets we serve:

- Down and Up-Stream Oil and Gas
- Power Generation
- Industrial Gas
- Clean Technologies
- Industrial Manufacturing
- Research Laboratories
- Space Exploration
- Transportation
- Mining

To learn more about our wide range of products visit us online at...

parker.com/ipd

Table of Contents

Introduction 3

SuparShield™ Corrosion Management Technology 4

MPI™ Series: Advanced Features 5

MPI™ Series: Pressure Rating Options 5

MPI™ Series: Assembly 5

MPI™ Series: Typical Raw Materials 5

Visual Index 6-12

Tubing

Tubing Selection Guide 13

General Selection Criteria 13

Maximum Allowable Working Pressure Tables 14

MPI™ 316/317 Cold Drawn Stainless Steel Tubing 14

MPI™ 316/316L Cold Drawn C&T Tubing 14

Cold Worked: Temperature Derating Factors 14

Instrumentation Grade ASTM Heavy Wall Tubing 15

Instrumentation Grade Nominal Wall 2507 Tubing 15

Annealed: Temperature Derating Factors 15

MPI™ 2507 Super Duplex Tubing 16

2507 Super Duplex: Temperature Derating Factors 16

Medium Pressure Fittings

How to Order MPI™ Fittings 17

MPI™ Medium Pressure Fittings 18-37

MPI™ Medium & High Pressure Collar & Gland Nuts 37

Parker X44™ 20,000 psi "Open-Source" Port Detail

Parker X44™ Port Machining Dimensions 38

Parker X44HBMP7: X44 Male by MPI™ Connector 39

Parker X444HT: X44 Male by MPI™ Tube Stub 39

Parker M40HX44: Type "M" Male by X44 Male 40

Medium Pressure Valves

MAN Series Needle Valves 41

Material of Construction 42

How to Order MAN Series Needle Valves 43

2-Way Straight Inline Valve 44

2-Way Angle Valve 44

3-Way/2 On-Pressure Valve 45

3-Way/1 On-Pressure Valve 45

3-Way/2-Stem Manifold Style Valve 46

2-Way Replaceable Seat 46

Needle Valve Options: High/Low Temp, Extender, Lockout 47

MAN Series Actuators - Pneumatic, Piston Style 48

MAN Series Actuators - Electric Flow Regulating 55

MADBN Series Double Block & Bleed Needle Valve 57

MAGV Series Gauge Valve 59

MABV Series Bleed Valve 60

MAB Series Ball Valves 61

How to Order MAB Series Ball Valves 62

MAB Series 2-Way Ball Valve 63

MAB Series 3-Way Ball Valve 65

MAB Series Ball Valve Options 67

MAB Ball Valve Actuators - Pneumatic/Electric 68

MADBB Double Block and Bleed Ball Valves 77

How to Order MADBB Series Ball Valves 80

MAF Dual Disc and MAFC Cup Type Filters 81

MAC O-Ring & MACB Series Ball Style Check Valves 83

MARA Series Metal Seat Relief Valve (Factory Set) 84

MARSA Series Soft Seat Relief Valve (Factory Set) 86

Technical Information

Assembly Instructions 88

Gaugeability/Remake Instructions 89

Gap Gauge 89

MPI™ Hydraulic Preset Tools (Air and Hand Pumps) 90-93

Part Number Crossover Reference Chart 94

Offer of Sale and Warranty 105

Note: Past Selections of "**F**" for NPT Valves and "**MF**" for Medium Pressure Cone and Thread Valves are no longer included in the current MPI™ catalog and can now be found in the Parker Autoclave Engineers Catalog: **P Series: NPT Valve** and **SM Series Needle Valve** brochures.

SuparShield™ Parker's Next Generation Corrosion Management Technology for Stainless Steels

Corrosion, Stress Corrosion Cracking, Hydrogen Embrittlement, and Fatigue of conventional austenitic stainless steel grades such as 316/316L have plagued the industry for years, driving increased adoption of exotic alloys leading to significantly higher costs and longer lead times.

Scientists and Engineers at Parker, adopting a New Technology Qualification Strategy validation method, have created the next generation Corrosion Management Process - Parker SuparShield™ that delivers significant corrosion and fatigue improvement with increased product lifespan.

Parker SuparShield™ is not a coating or a plating that can be easily scratched or scraped off the product surface and it ultimately provides up to 40X the corrosion resistance of cold worked 316SS (typically used in MPI™ products). The validation strategy included extensive FMEA, metallurgy, microscopy, corrosion and product performance testing, including a Modified ASTM G36+ Stress Corrosion Test on actual product.

The following comparison example show an unprocessed and processed with SuparShield™ steel coupons after exposure to the environment.

Available today on all MPI™ Fittings using **-SPS** SuparShield™ suffix (for Valves and Tubing, consult factory)

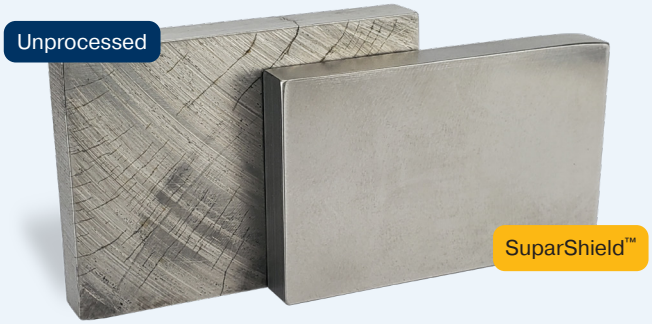

Related Literature

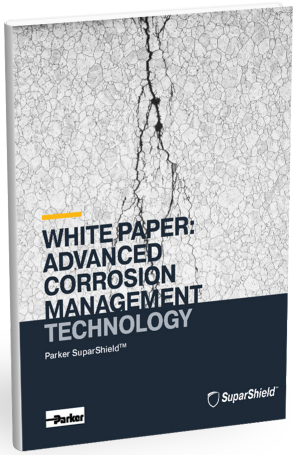

Download the SuparShield™ White Page by scanning this QR Code or by **clicking here**.

Medium Pressure Inverted Valves and Fittings - MPI™ Series

Parker Hannifin, original Patent Holder (US 6851839 B2), for "Tube Fitting, Medium Pressure" developed the MPI™ Medium Pressure compression fitting connections to be secure and gas-tight while being made manually (wrench turns) or hydraulic set tool.

This connection has application throughout industry, including off-shore oil and gas exploration platforms, research labs, and other facilities that require operating pressures to 20,000 psi (1378 bar).

MPI™ Fittings are ideally suited to handle liquids, gases, or chemicals and can be used on a wide variety of tubing materials including: Instrument Grade thick-walled annealed 316 SS, 1/8th Hard (cold drawn) 316 or 317 SS MPI™ tubing, and 2507 Super Duplex MPI™ tubing up to 1" OD. Every Parker MPI™ Fitting is supplied complete with both ferrules and nuts, ready to install.

Advanced Features

Every MPI™ Fitting has the features shown below:

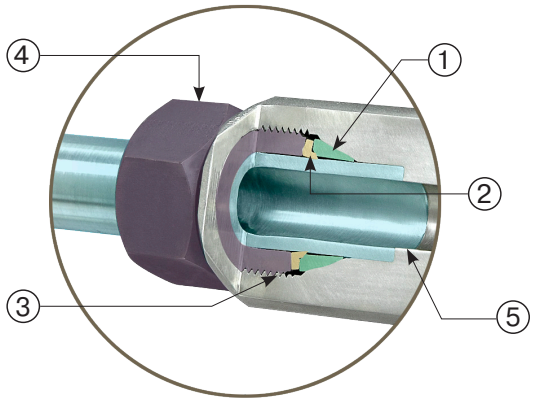

1. **Front Ferrule** with corrosion-resistant Parker Suparcase® forms a seal between the tube, body and ferrule. It also provides a mechanical hold on the tube.
2. **Back Ferrule** with corrosion-resistant Parker Suparcase® provides a strong mechanical hold on the tube.
3. **Longer Thread Area** for improved resistance to pressure and load on the ferrules.
4. **Molybdenum Disulfide-Coated Inverted Nut** helps prevent galling, provides easier assembly, and permits multiple remakes.
5. **Long Tube-Support Area** improves resistance to vibration and line loads.

Caution!!
Do not intermix with any part of any other manufacturer.

MPI™ Pressure Rating Options

Parker Hannifin has designed MPI™ Fittings and Valves to comply with the following ASME Standards:

ASME B31.1 Power Piping: For Pressures to 15,000 psi
ASME B31.3 Process Piping: For Pressures to 15,000 psi
ASME B31.3 Chapter IX High Pressure Piping: Use **-IX** Suffix for Pressures to 20,000 psi

It is the responsibility of the System Design Engineer to select the proper design code for their application. To order valves or fittings capable of increased pressures to 20,000 psi, please use suffix **-IX** which also includes vent holes in female ports as standard for safety.

Assembly

MPI™ Fittings are assembled with standard hand tools up to 9/16" size. 1-1/2 turns past finger tight is all that is needed, 3/4 and 1 inch 316 SS tubing and all 2507 Tubing must have ferrules hydraulically preset.

Note: All sizes can be hydraulically preset using the Parker Preset Tooling shown on page 90. Refer to the ***MPI™ Preset Instructional Manual, Catalog 4234-B1***, for proper use of the MPI™ tooling.

Dedication to Quality

Our resources and vast product line are available through our worldwide distribution network. For more information regarding our products and services, please contact your authorized Parker Instrumentation Distributor.

Typical Raw Materials

Suffix	Basic Fitting Material	Straights	Shapes
-SS	Stainless Steel (Type 316)	ASME/ASTM SA/A-479 Type 316-SS ASTM A-276 Type 316 BS970 316-S31 DIN/EN 1.4401	ASME SA-182 316 BS970 316-S31 DIN/EN 1.4401
-2507	Super Duplex (Type 2507)	UNS S32750 ASME/ASTM SA/A-479 DIN/EN 1.4410	UNS S32750 ASME/ASTM SA/A-479 DIN/EN 1.4410

If additional information, including heat code traceability, is required, contact Parker Hannifin or your nearest MPI™ Fitting distributor.

Visual Index: MPI™ Series Fittings

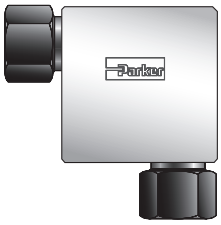

EBMP7
MPI™ Union Elbow

Page 18

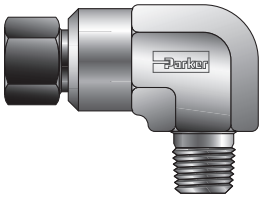

CBMP7
MPI™ to
Male NPT Elbow

Page 20

NBMP7
45° MPI™ Union Elbow

Page 18

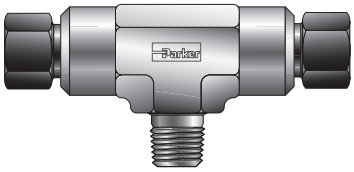

SBMP7
MPI™ to
NPT Male Branch Tee

Page 21

JBMP7
MPI™ Union Tee

Page 19

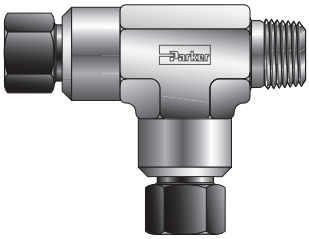

RBMP7
MPI™ to
NPT Male Run Tee

Page 21

OBMP7
MPI™ to
NPT Female Branch Tee

Page 20

HBMP7
MPI™ Union Connector

Page 22

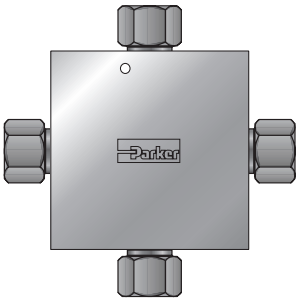

KBMP7
MPI™ Union Cross

Page 20

GBMP7
MPI™ to Female NPT
Union Connector

Page 22

Visual Index: MPI™ Series Fittings

MF GBMP7
MPI™ to
Female Medium Pressure Cone
and Thread (C&T)
Union Connector

Page 23

FBMP7
MPI™ Male NPT Connector

Page 25

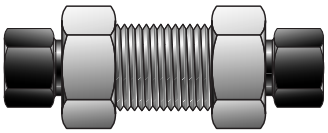

WBMP7
MPI™ Bulkhead Union
Connector

Page 23

XHBMP7
37° Flare to
MPI™ Connector

Page 26

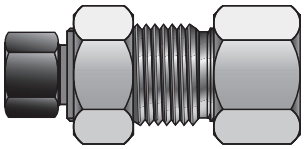

GH2BMP7
MPI™ to
Female NPT Bulkhead
Union Connector

Page 24

MP7H2BX
37° Flare Bulkhead to
MPI™ Connector

Page 26

X42HBMP7
Medium Pressure to
MPI™ Connector

Page 24

M40HBMP7
Type “M” High Pressure
Hose to MPI™ Connector

Page 27

X41HBMP7
High Pressure to
MPI™ Connector

Page 25

MP7HBA
MPI™ to
SAE Male
O-ring Connector

Page 27

Visual Index: MPI™ Series Fittings

TRBMP7
MPI™ Tube Stub Reducer

Page 28

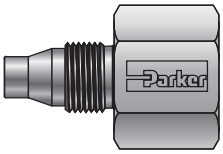

GM7
MPI™ Male End to Female NPT

Page 30

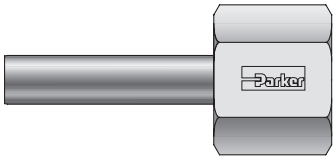

MF T7HG
MPI™ Tube Stub to
Female Medium Pressure
Cone & Thread (C&T)

Page 28

T7HBT7
MPI™ Tube Port Connector

Page 31

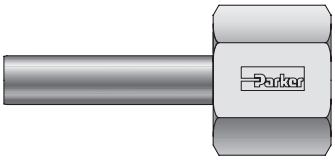

T7HG
MPI™ Tube Stub to
Female NPT Pipe

Page 29

X42HT7
Medium Pressure to
MPI™ Tube Stub

Page 32

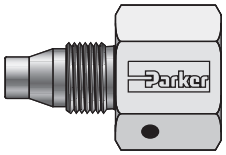

HF GM7
MPI™ Male End to
High Pressure C&T Port

Page 29

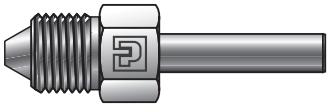

X41HT7
High Pressure to
MPI™ Tube Stub

Page 32

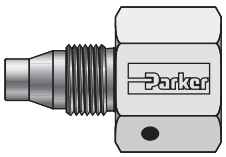

MF GM7
MPI™ Male End to
Medium Pressure C&T Port

Page 30

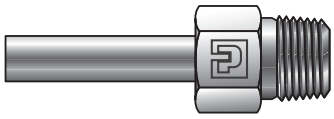

T7HF
MPI™ Tube Stub to
Male NPT Pipe

Page 33

Visual Index: MPI™ Series Fittings

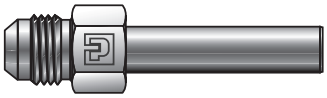

XHT7
37° Flare to
MPI™ Tube Stub

Page 33

PNBMP7
MPI™ Cap

Page 36

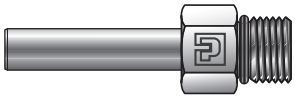

T7HOA
MPI™ Tube Stub to
Male SAE O-ring

Page 34

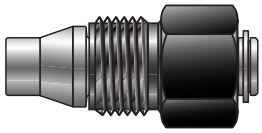

FNMP7
MPI™ Plug

Page 36

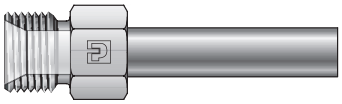

M40HT7
Type “M” High Pressure Hose
Adapter to MPI™ Tube Stub

Page 34

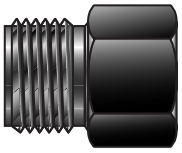

BMP7
MPI™ Nut

Page 37

MP7PC
MPI™ Port Connector

Page 35

MPFF
MPI™ Front Ferrule

Page 37

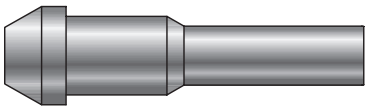

X47HT7
Medium Pressure Port Connector
to MPI™ Tube Stub

Page 35

MPBF
MPI™ Back Ferrule

Page 37

Visual Index: Parker X44™ Port Adapters / MAN Series Needle Valves

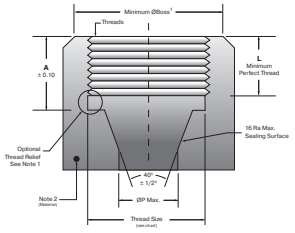

Medium Pressure "Open-Source" Port Dimensions: Parker X44™

*Requires X44 Male Adapter to interface

Page 38

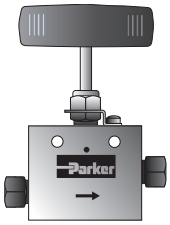

MAN Series

2-Way Straight
Inline Needle Valve

Page 44

X44HBMP7

X44 Male by MPI™ Connector

Page 39

MAN Series

2-Way Angle
Needle Valve

Page 44

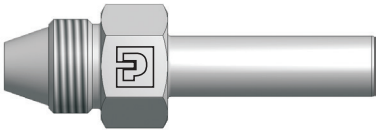

X44HT7

X44 Male by MPI™ Tube Stub

Page 39

MAN Series

3-Way/2 On-Pressure
Needle Valve

Page 45

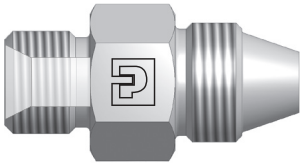

M40HX44

Type “M” Male by X44 Male

Page 40

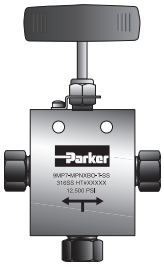

MAN Series

3-Way/1 On-Pressure
Needle Valve

Page 45

MAN Series

3-Way/2-Stem
Manifold Needle Valve

Page 46

Visual Index: MAN Series Needle Valves & Actuators / MAB Series Ball Valves & Actuators

MAN Series
2-Way Angle Valves
(Replaceable Seat)

Page 46

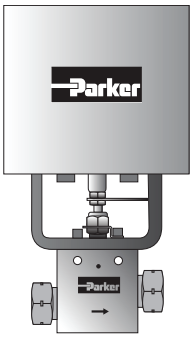

MAN Series
Needle Valve
Pneumatic Piston Actuators

Page 48

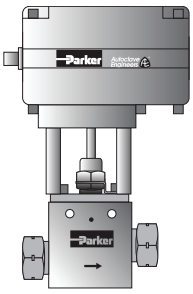

MAN Series
Regulating Needle Valve
FRC Electric Flow Control
Actuators

Page 55

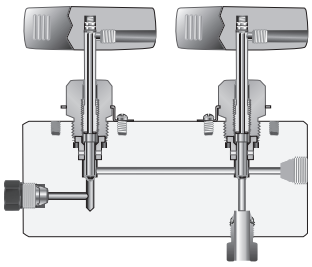

MADBN Series
Double Block and Bleed
Needle Valve

Page 57

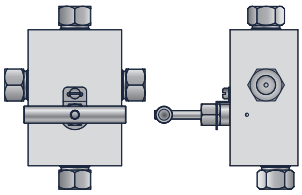

MAGV Series
Needle Type
Gauge Valve

Page 59

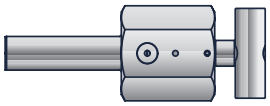

MABV Series
Bleed Valves*

**(use with MAGV Valve to create Single Block and Bleed Type Valve)*

Page 60

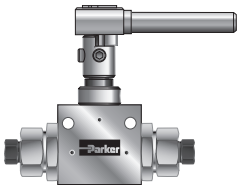

MAB Series
2-Way Ball Valves

Page 61

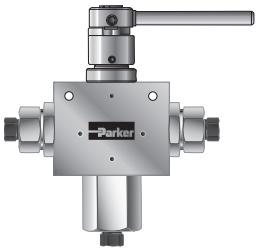

MAB Series
3-Way Ball Valves

Page 65

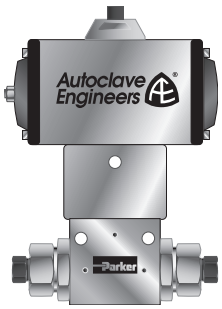

MAB Series
Ball Valve Actuators
Pneumatic and Electric

Page 68

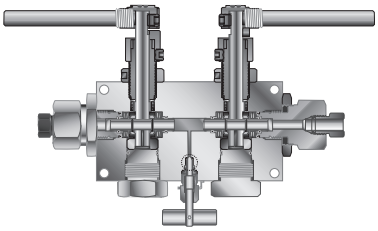

MADBB Series
Double Block & Bleed Ball Valve

Page 77

Visual Index: Relief Valves, Check Valves, and Filters / Tools

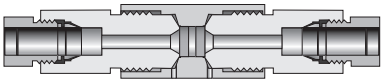

MAF Series
Dual Disc Line Filter

Page 81

MPI™ Gap Gauge

Page 89

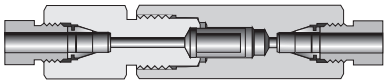

MAFC Series
Cup Line Filter

Page 82

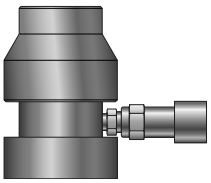

MPI™ Hydraulic
Preset Tools

Page 90

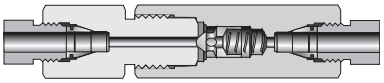

MAC & MACB Series
O-ring & Ball Type Check Valves

Page 83

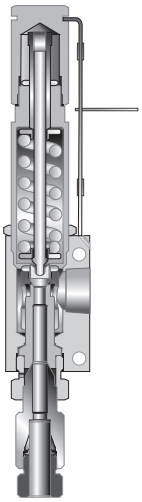

MARA Series
Metal Seat Relief Valve

Page 84

MARSA Series
Soft Seat Relief Valve

Page 86

Tubing Selection Guide

Parker's MPI™ Fittings are engineered and manufactured to consistently provide high levels of reliability. However, no system's integrity is complete without considering the critical link, tubing.

This section is intended to help you properly select and order quality 316/316L Stainless Steel tubing, both annealed and medium-pressure cold drawn – 1/8 hard as well as 2507 Super Duplex materials.

Parker MPI™ Tubing and Fittings are designed and built using a variety of ASME specifications which present different safety factors for your consideration. MPI™ Tubing and annealed instrumentation tubing (tables1, 3, 4 and 5) may be used for ASME B31.3 CH IX applications. However, Cone and Thread tubing has a reduced outer diameter and may not be used with MPI™ valves and fittings for pressures above charted maximum pressure.

Tube End and Gland Dimensional Data with Minimum Straight Length

Size No.	Inches						
	Tube O.D.	Straight Thread	**C**	**D**	**E** (orifice)	**L***	**W** Hex
4	1/4	1/2 - 20	.50	1.34	.13	1.62	9/16
6	3/8	5/8 - 20	.63	1.58	.25	1.88	11/16
8	1/2	13/16 - 20	.69	1.85	.31	2.25	15/16
9	9/16	7/8 - 20	.75	1.91	.38	2.25	1
12	3/4	1 1/8 - 18	.88	2.26	.52	2.75	1 1/4
16	1	1 7/16 - 18	1.13	2.88	.69	3.38	1 1/2

L* - Recommended Straight Length of circular unbent tubing.

Dimensions **C** and **D** are shown in the finger tight position.

Dimensions in inches are for reference only, subject to change.

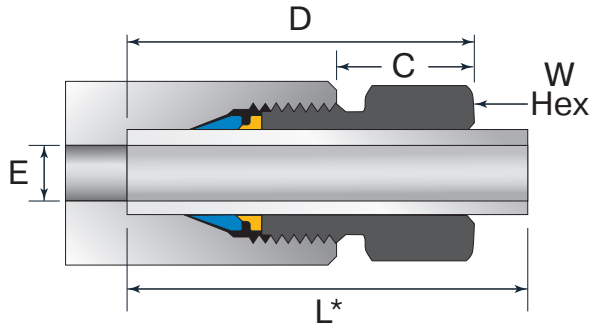

General Selection Criteria

The data tables in this section will help you select the tubing that best satisfies the flow (size) and material requirements of the application.

The most important consideration in the selection of suitable tubing for any application is the compatibility of the tubing materials with the media to be contained.

System Pressure

The system operating pressure is another important factor in determining the material strength and tubing wall thickness to be used.

In General, high pressure installations require strong materials such as Stainless Steel or Super Duplex to be employed. MPI™ tube fitting assemblies are limited to the lowest MAWP rated part in the fluid system - tubing, fitting or valve. System proof testing should be performed per the applicable design code.The maximum proof test pressure for an MPI™ tube system (MPI™ fittings and tubing) is summarized below.

Maximum Proof Pressure (PSI)		
MPI™ Size	316	2507
4 thru 9	22,500	22,500
12*	22,500	22,500
16*	19,000	22,500
* -SS MPI™ fittings require **-XF** option		

Maximum Allowable Working Pressure Tables

The following tables list the maximum working pressure of various tubing sizes, according to material. Acceptable tubing diameters and wall thicknesses are those for which a rating is listed. O.D./I.D. combinations which do not have a pressure rating are not recommended for use with MPI™ Fittings.

MPI™ 316/317 Cold Drawn Stainless Steel Tubing

MPI™ tubing is marked "MPI" and is designed to provide optimum performance for MPI™ fittings. MPI™ tubing is nominal OD (±.003") 316/316L seamless stainless steel, cold drawn - with 2.5% Moly and 12% Nickel minimum. (Not suitable for NACE/ISO 15156 application)

Table 1 – 316 or 317 Stainless Steel (Seamless / Cold Drawns)

Tube Size (in.)	Nominal OD (in.)	Nominal ID (in.)	Wall Thickness (in.)/(Ref.)	Working Pressure (psi) ASME 31.1 / 31.3 [1]	Working Pressure (Chapter IX) [2]	MPI™ Tube Part No.*
1/4	.250	.125	.062	15,000	20,000	4-240 MPITube-SS
3/8	.375	.219	.078			6-240 MPITube-SS
9/16	.562	.344	.109			9-240 MPITube-SS
3/4	.750	.469	.140			***12-240 MPITube-SS
1	1.000	.656	.172	12,500	19,000	***16-240 MPITube-SS

NOTES:
Sizes 3/4" & 1" MPI™ tubing require hydraulic presetting when used with MPI™ fittings.

1. ASME B31.3 working pressure calculated using an allowable stress of 35,000 psi.
2. ASME B31.3, Chapter IX working pressure calculated using an allowable stress of 46,667 psi.

Dimensions in inches are for reference only, subject to change.

* To order 317 tube replace **SS** with **317**

*** Must use **-XF** ferrule option above 10,000 psi MAWP

316/316L Cold Drawn Stainless Steel Cone & Thread Tubing

Medium Pressure 316/316L cold drawn SS Cone & Thread tubing, designed using ASME B31.3 Chapter IX. MPI™ fittings work effectively with the Cone & Thread (C&T) tubing as listed below. C&T tubing has an undersized OD to facilitate the coning and threading operations; therefore hydraulic presetting is required for optimum performance. C&T tubing when used with MPI™ fittings may only be used for ASME B31.3 Chapter II applications. (**Note:** This tubing is line striped with working pressure in excess of maximum working pressures listed below)

Table 2 – 316 Stainless Steel Medium Pressure Tubing (Undersized OD, Seamless /Cold Drawn – (1/8 Hard)

Tube Size (in.)	Maximum OD (in.)	Nominal ID (in.)	Working Pressure (psi)	Parker Autoclave Part Number
1/4	.250	.109	12,500	MS15-092
3/8	.375	.203	12,500	MS15-093
9/16 (1)	.562	.312	12,500	MS15-085
9/16 (2)	.562	.359	10,000	MS15-097
3/4	.750	.516	10,000	MS15-098
1	1.000	.688	10,000	MS15-099

NOTE: Cone & Thread tubing is line marked with MAWP Pressures in excess of MPI™ Sealing Strength when used on undersize OD tubing and are limited to pressures shown in this chart.

316/317 Cold Drawn Stainless Steel: Temperature Derating Factors (Tubing, Valves, Fittings)

Indicates derating factors for products made from cold worked 316 & 317 Stainless Steel having a temperature range from -425°F (-254°C) to 1000°F (538°C).

Temperature Derating Factors - Cold Worked										
°F	-425° to 100°	200°	300°	400°	500°	600°	700°	800°	900°	1000°
°C	-254° to 538°	93°	149°	204°	260°	316°	371°	427°	482°	538°
Cold Worked*	1.00	1.00	0.97	0.95	0.93	0.90	0.86	0.83	0.32	0.31

* Use with 1/8 Hard 316 tubing shown in Tables 1 (MPI™) and 2 (C&T).

Example: *1/4" MPI™ Fittings and 1/4" 316 SS MPI Tubing (4-240 MPITube-SS) to 800°F and meeting ASME B31.1/B31.3 design rules: @ 800°F.*

The rating at temperature is the Room Temperature (RT) Pressure Rating (**15,000 psi**) listed in the catalog, multiplied by the Derating Factor at 800°F (**0.83**). Calculated: 15,000 x 0.83 = **12,450 PS**I. Same tubing using ASME B31.3 Chapter IX rules, 20,000 x .83 = 16,600 PSI

Instrumentation Grade ASTM Heavy Wall Tubing

Table 3 – 316 or 317 Stainless Steel (Seamless / Annealed - Suitable for use in NACE/ISO 15156 Application)

Tube Size (in.)	Tube Wall Thickness (in.)								
	.065	.083	.095	.109	.120	.134	.156	.188	.220
	Working Pressure (psi)								
1/4	10,300	13,300	-	-	-	-	-	-	-
3/8	6,600	8,600	10,000	11,700	-	-	-	-	-
1/2	-	6,700	7,800	9,100	10,000	11,400	-	-	-
3/4	-	-	-	5,800	6,400	7,300	8,600	10,600	-
1	-	-	-	-	4,700	5,300	6,200	7,700	9,200

NOTE:

Working pressures calculated using an allowable stress of 20,000 psi for annealed 316 stainless steel tubing with a nominal O.D. tolerance of ± .005".

Dimensions in inches are for reference only, subject to change.

Ordering Suggestion:

Fully annealed, high-quality type 316/316L stainless steel tubing ASTM A269 or A213, or equivalent. Hardness not to exceed 90 HRB. Tubing to be free of scratches, suitable for bending and flaring.

Annealed 316/317 SS Tubing: Temperature Derating Factors

Indicates derating factors for Annealed 316SS/317SS. As indicated this material can be used from -425°F (-254°C) to 1000°F (538°C).

Temperature Derating Factors - Annealed										
°F	-425° to 100°	200°	300°	400°	500°	600°	700°	800°	900°	1000°
°C	-254° to 38°	93°	149°	204°	260°	316°	371°	427°	482°	538°
Annealed**	1.00	1.00	1.00	0.97	0.90	0.85	0.82	0.80	0.78	0.77

**Not for use with Cold Worked High Strength Tubing)

Example:

1/4" MPI™ Fittings and 1/4" x .083" Wall Thickness Annealed 316 SS Tubing to 800°F and meeting ASME B31.1/B31.3 design rules.

The rating at temperature is the Room Temperature (RT) Pressure Rating (**13,300 psi**) listed in the catalog, multiplied by the Derating Factor at 800°F (**0.80**). Calculated: 13,300 x 0.80 = **10,640 PS**I

MPI™ 2507 Super Duplex

Tubing is an engineered part of our total system "package" - the same as any of our components. Parker's 2507 MPI™ tubing is manufactured to a specialized and tightly controlled set of design specifications that make it standard "commercial" tubing. All of the 2507 material used to manufacture MPI™ tubing complies with the NOROSOK M630 and NACE MR0175 specifications.

- **Minimum PREN of 42.5**: Offers an increased chloride corrosion resistance over standard ASTM A789 tube.
- **6% Greater Allowable Stress** [2] : Allows the tube wall to be thinner without compromising pressure holding capability.
- **Up to 19% Weight Saving**: Critical in offshore application where every pound counts. [3]

Instrument Grade Nominal Wall 2507 Tubing

Table 4 – MPI™ Fittings on Annealed 2507 Seamless Tubing [1,2,3] (Suitable for use in NACE/ISO 15156 Application)

Tube Size (in.)	Wall Thickness								
	0.035	0.049	0.065	0.083	0.095	0.109	0.120	0.134	0.156
	Working Pressure (psi)								
1/4	10,600	15,000	-	-	-	-	-	-	-
3/8	6,800	9,900	13,600 [4]	15,000 [4]	-	-	-	-	-
1/2	-	7,200	9,900	13,000 [4]	15,000 [4]	-	-	-	-
3/4	-	-	6,400	8,300	9,600 [4]	11,200 [4]	12,500 [4]	14,100 [4, 5]	-
1	-	-	-	6,100	7,000	8,200 [4]	9,100 [4]	10,200 [4]	12,100 [4]

1 Customer should verify acceptable corrosion resistance for the combination of 316 fittings with 2507 tubing for their specific application (media and environment). Parker recommends matching fitting material to tube material.

2 Tubing per ASTM A789 or UNS S32750 material is recommended. Hardness not to exceed 32 HRC..

3 ASME B31.3 allowable stress of 38,700 psi for UNS 32750 (A789) and tube wall thickness tolerance of ±10% used to calculate pressure ratings. Please contact factory for assistance in calculating pressure ratings for different parameters.

4 Heavier wall 2507 (high lighted fields) may require additional preset pressure. Refer to page 91 for recommended 2507 tube preset pressures.

5 15,000 psi with a minimum wall thickness of 0.127"

MPI™ 2507 Super Duplex

Table 5 – MPI™ 2507 Super Duplex Seamless Tubing for pressures to 20,000 psi Service
(Suitable for use in NACE/ISO 15156 Application)

Tube Size (in.)	Nominal OD (in.)	Nominal ID (in.)	Wall Thickness (in.)/(Ref.)	Working Pressure (psi) ASME B31.1/3 Chapter II [4]	Working Pressure (psi) ASME B31.3 Chapter IX [5]	MPI™ Tube Part No.
1/4	0.250	0.165	0.043	15,000	20,000	4-240 MPITUBE-2507
3/8	0.375	0.250	0.063			6-240 MPITUBE-2507
1/2	0.500	0.334	0.083			8-240 MPITUBE-2507
3/4	0.750	0.500	0.125			12-240 MPITUBE-2507
1	1.000	0.669	0.165			16-240 MPITUBE-2507

[1] Dimensions in inches are for reference only, subject to change without notice.
[2] When compared to standard ASTM A789 tubing
[3] Sizes 3/4" & 1" MPI™ 2507 tubing require hydraulic presetting when used with MPI™ fittings and require **-XF** High Strength Ferrules.
[4] ASME B31.3 working pressure calculated using an allowable stress of 41,000 psi.
[5] ASME B31.3, Chapter IX working pressure calculated using an allowable stress of 58,000 psi.

Table 6 – 2507 Super Duplex Medium Pressure (Cone & Thread) Tubing (requires all sizes to be hydraulically set)
(Suitable for use in NACE/ISO 15156 Application)

Tube Size (in.)	Maximum OD (in.)	Nominal ID (in.)	Working Pressure (psi)	Parker Autoclave Part Number
1/4	.248	.109	15,000	MS15-503
3/8	.370	.203	15,000	MS15-504
3/4	.745	.516	10,000	MS15-501*
1	.995	.688	10,000	MS15-502*

* Heavier wall thickness versions (MS15-506 & MS15-507) NOT approved for use with MPI™ Fittings or Valves.

Super Duplex 2507 Material: Temperature Derating Factors (Tubing, Valves, Fittings)

Indicates derating factors for products made with 2507 Super Duplex material having a temperature range of -60˚F (-50˚C) to 500˚F (260˚C).

Temperature Derating Factors - Super Duplex 2507					
˚F	-60˚ to 100˚	200˚	300˚	400˚	500˚
˚C	-50˚ to 40˚	93˚	149˚	204˚	260˚
Super Duplex 2507	1.00	.99	.94	.91	.89

Example: *1/4" MPI™ (2507 Super Duplex) Fittings and Tubing @ 400˚F.*

The rating at temperature is the Room Temperature (RT) Pressure Rating (**15,000 psi**) listed in the catalog, multiplied by the Derating Factor at 400˚F (**0.91**). Calculated: 15,000 x 0.82 = **13,650 PSI**

How To Order MPI™ Fittings

Dimensions in inches are for reference only, subject to change.

Parker MPI™ Fittings should be ordered using the part number as listed in this catalog. Part numbers are developed as follows:

1. A combination of letters and numbers identifies the size and style of the fitting and the material used.
2. Tube and pipe thread sizes are designated by the number of sixteenths of an inch (1/4" tube = 4/16" or 4).

All standard MPI™ Fittings are manufactured from CW316 stainless steel as standard. 2507 Super Duplex Fittings and Valves can optionally be ordered by replacing **SS** ordering code with **2507**. Both Materials can be made to ASME B31.3 Chapter IX rules allowing working pressure to be increased to 20,000 psi using suffix code **-IX**. This suffix also includes as standard, vent holes to identify any leakage immediately for safety.

Straights and Elbows:

See charts in this catalog for correct order of connection/size designation order ("4-4").

Example:

Part number **4-4 HBMP7-SS-IX** union made with 316 SS and capable of 20,000 psi MAWP would have the specifications listed below.

4-4 HBMP7-SS-IX

4	-	4	H	B	MP7	-	SS	- Options
1/4" Tube		1/4" Tube	Shape Designator, Union	Assembled with Nut and Ferrules	Medium Pressure Inverted		Stainless Steel	**-IX** (20,000 psi MAWP)

Tee Example:

Part number **9-6-6 JBMP7-2507** union made from 2507 Super Duplex union would have the specifications listed below.

9-6-6 JBMP7-2507-IX

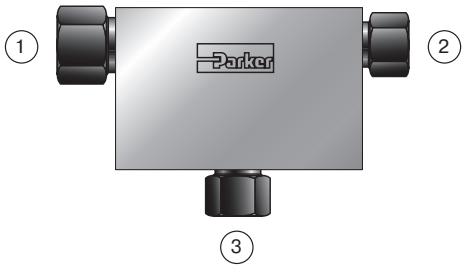

9	-	6	-	6	J	B	MP7	-	2507	- Options
9/16" Tube (1)		3/8" Tube (2)		3/8" Tube (3)	Shape Designate, Union Tee	Assembled with Nut and Ferrules	Medium Pressure Inverted		2507 Super Duplex	See Options Below

When special configurations are required, please contact your Parker representative with application details for a custom quotation. **Note: -VT** option is included (but not shown) with **-IX** suffix that changes working pressure to 20,000 psi max per Chapter IX rules.

Fitting Options and Suffix Codes:

IX = Denotes User Accepting ASME B31.3 Chapter IX Design Rules and Safety Factors that Increase Working Pressure of part up to and no higher than 20,000 psi (1378 bar) MAWP.

NC = Body Material Complies with NACE/ISO 15156 Material Requirements. (316 SS replaced with NACE compliant Austenitic Stainless Steel S20910 material)

SPS = SuparShield™ Surface Treatment for superior cracking and corrosion resistiance

VT = Addition of Vent/Weep Holes in female port for Cryogenic Service (included as standard when using **-IX** suffix)

XF = Optional Extra Strong Ferrule Material for sizes 12 and 16 only. Required when working pressure is over 10,000 psi or for any pressure 2507 Super Duplex Tubing. These ferrules are standard when buying 2507 Super Duplex Fittings or Valves.

Z6 = Option for Factory to Preset Ferrules and Nuts on Male Tube Stub type fittings. (Mandatory for sizes 12 and 16 fittings)

NSK = 2507 body material complies with NORSOK M630

EBMP7

MPI™ Union Elbow

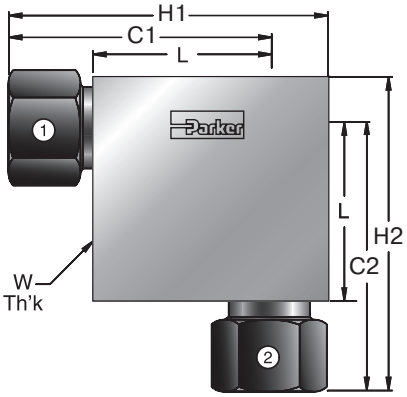

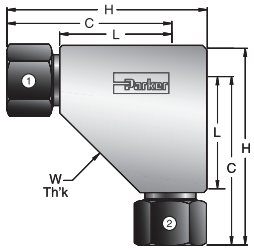

(Old Style, no longer offered)

Parker Part No.	Inches							
	MPI™ Size #1	MPI™ Size #2	C1	C2	H1	H2	L	W Th'k
4-4 EBMP7*	1/4	1/4	1.53	1.53	1.88	1.88	1.03	5/8
6-4 EBMP7*	3/8	1/4	1.86	1.74	2.25	2.12	1.24	3/4
6-6 EBMP7*	3/8	3/8	1.86	1.86	2.25	2.25	1.24	3/4
8-8 EBMP7*	1/2	1/2	2.22	2.22	2.81	2.81	1.54	1
9-6 EBMP7*	9/16	3/8	2.29	2.17	2.88	2.76	1.54	1
9-8 EBMP7*	9/16	1/2	2.29	2.13	3.04	2.92	1.54	1
9-9 EBMP7*	9/16	9/16	2.29	2.29	2.88	2.88	1.54	1
12-8 EBMP7*	3/4	1/2	2.82	2.63	3.51	3.32	1.94	1-3/8
12-12 EBMP7*	3/4	3/4	2.82	2.82	3.51	3.51	1.94	1-3/8
16-16 EBMP7*	1	1	3.63	3.63	4.51	4.51	2.50	1-3/4

* Add to the part number either **-SS** or **-2507** depending on selected material. (Example: **16-16 EBMP7-SS**)

9/16" MPI™ size option not available in 2507 Super Duplex (Use 1/2" MPI™)

-XF ferrule option required MPI™ sizes 12 & 16 above 10,000 psi MAWP or for any pressure 2507 Super Duplex Tubing

-IX suffix is required when increasing working pressure to 20 ksi MAWP (per ASME 31.3 Chapter IX)

NOTE: Triangular shape body (see left) used prior to 2022 is no longer offered

NBMP7

45° MPI™ Union Elbow

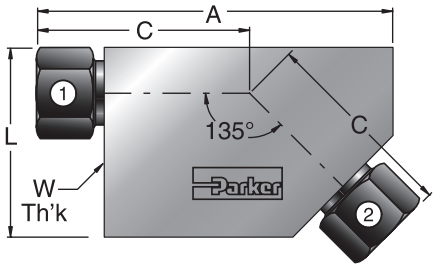

Parker Part No.	Inches				
	MPI™ Size	A	C	L	W Th'k
4-4 NBMP7*	1/4	2.56	1.50	1.38	5/8
6-6 NBMP7*	3/8	3.10	1.81	1.63	3/4
8-8 NBMP7*	1/2	3.76	2.18	2.13	1
9-9 NBMP7*	9/16	3.82	2.24	2.13	1
12-12 NBMP7*	3/4	4.76	2.82	2.63	1-3/8
16-16 NBMP7*	1	6.13	3.63	3.38	1-3/4

* Add to the part number either **-SS** or **-2507** depending on selected material. (Example: **16-16 NBMP7-SS**)

9/16" MPI™ size option not available in 2507 Super Duplex (Use 1/2" MPI™)

-XF ferrule option required MPI™ sizes 12 & 16 above 10,000 psi MAWP or for any pressure 2507 Super Duplex Tubing

-IX suffix is required when increasing working pressure to 20 ksi MAWP (per ASME 31.3 Chapter IX)

NOTE: Body shape may vary with size and configuration. Consult factory for size-specific drawing.

JBMP7

MPI™ Union Tee

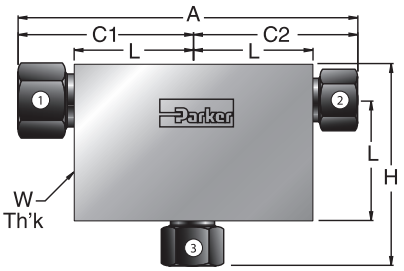

	Inches								
Parker Part No.	MPI™ Size #1	MPI™ Size #2	MPI™ Size #3	A	C1	C2	H	L	W Th'k
4-4-4 JBMP7*	1/4	1/4	1/4	3.06	1.53	1.53	1.88	1.03	5/8
4-4-6 JBMP7*	1/4	1/4	3/8	3.47	1.74	1.74	2.25	1.24	3/4
6-4-4 JBMP7*	3/8	1/4	1/4	3.60	1.86	1.74	2.13	1.24	3/4
6-6-4 JBMP7*	3/8	3/8	1/4	3.83	1.86	1.86	2.13	1.24	3/4
6-6-6 JBMP7*	3/8	3/8	3/8	3.83	1.86	1.86	2.25	1.24	3/4
6-6-8 JBMP7*	3/8	3/8	1/2	4.32	2.16	2.16	2.81	1.54	1
6-6-9 JBMP7*	3/8	3/8	9/16	4.45	2.16	2.29	2.88	1.54	1
8-6-6 JBMP7*	1/2	3/8	3/8	4.38	2.22	2.16	2.75	1.54	1
8-8-6 JBMP7*	1/2	1/2	3/8	4.45	2.22	2.22	2.75	1.54	1
8-8-8 JBMP7*	1/2	1/2	1/2	4.45	2.22	2.22	2.81	1.54	1
9-6-4 JBMP7*	9/16	3/8	1/4	4.45	2.29	2.16	2.63	1.54	1
9-6-6 JBMP7*	9/16	3/8	1/4	4.45	2.29	2.16	2.75	1.54	1
9-9-4 JBMP7*	9/16	9/16	1/4	4.57	2.29	2.29	2.63	1.54	1
9-9-6 JBMP7*	9/16	9/16	3/8	4.57	2.29	2.29	2.75	1.54	1
9-9-9 JBMP7*	9/16	9/16	9/16	4.57	2.29	2.29	2.88	1.54	1
12-12-9 JBMP7*	3/4	3/4	9/16	5.64	2.82	2.82	3.38	1.94	1-3/8
12-12-12 JBMP7*	3/4	3/4	3/4	5.64	2.82	2.82	3.51	1.94	1-3/8
16-16-9 JBMP7*	1	1	9/16	7.27	3.63	3.63	4.13	2.50	1-3/4
16-16-12 JBMP7*	1	1	3/4	7.27	3.63	3.63	4.26	2.50	1-3/4
16-16-16 JBMP7*	1	1	1	7.27	3.63	3.63	4.51	2.50	1-3/4

* Add to the part number either **-SS** or **-2507** depending on selected material. (Example: **16-16-16 JBMP7-SS**)

9/16" MPI™ size option not available in 2507 Super Duplex (Use 1/2" MPI™)

-XF ferrule option required MPI™ sizes 12 & 16 above 10,000 psi MAWP or for any pressure 2507 Super Duplex Tubing

-IX suffix is required when increasing working pressure to 20 ksi MAWP (per ASME 31.3 Chapter IX)

NOTE: Body shape may vary with size and configuration. Consult factory for size-specific drawing.

OBMP7

MPI™ to NPT
Female Branch Tee

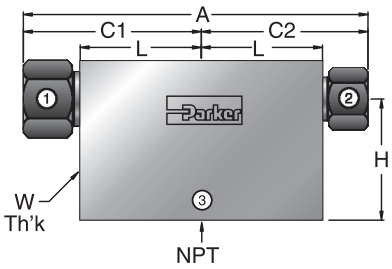

Parker Part No.	Inches									Working Pressure (PSIG)
	MPI™ Size #1	MPI™ Size #2	NPT Thread #3	A	C1	C2	H	L	W Th'k	
4-4-4 OBMP7*	1/4	1/4	1/4 - 18	3.47	1.74	1.74	1.24	1.24	3/4	15,000
6-6-4 OBMP7*	3/8	3/8	1/4 - 18	3.83	1.86	1.86	1.24	1.24	3/4	15,000
6-6-8 OBMP7*	3/8	3/8	1/2 - 14	3.88	1.94	1.94	1.54	1.31	1-3/8	15,000
8-8-8 OBMP7*	1/2	1/2	1/2 - 14	4.45	2.22	2.22	1.94	1.54	1-3/8	15,000
9-9-8 OBMP7*	9/16	9/16	1/2 - 14	4.57	2.29	2.29	1.94	1.54	1-3/8	15,000
12-12-8 OBMP7*	3/4	3/4	1/2 - 14	5.64	2.82	2.82	1.94	1.94	1-3/8	15,000
16-16-12 OBMP7*	1	1	3/4	7.26	3.63	3.63	2.5	2.5	1-3/4	10,000

* Add to the part number either **-SS** or **-2507** depending on selected material. (Example: **16-16-12 OBMP7-SS**)

9/16" MPI™ size option not available in 2507 Super Duplex (Use 1/2" MPI)

Thickness of 2507 fittings may be greater than shown, contact factory for details if an issue

-XF ferrule option required MPI™ sizes 12 & 16 above 10,000 psi MAWP or for any pressure 2507 Super Duplex Tubing

-IX option not available on this adapter style

NOTE: Body shape may vary with size and configuration. Consult factory for size-specific drawing.

KBMP7

MPI™ Union Cross

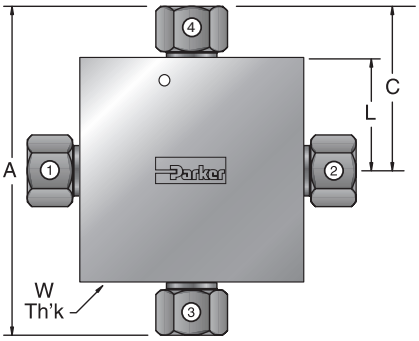

Parker Part No.	Inches				
	MPI™ Size	A	C	L	W Th'k
4 KBMP7*	1/4	3.06	1.53	1.03	5/8
6 KBMP7*	3/8	3.83	1.86	1.24	3/4
8 KBMP7*	1/2	4.45	2.22	1.54	1
9 KBMP7*	9/16	4.57	2.29	1.54	1
12 KBMP7*	3/4	5.64	2.82	1.94	1-3/8
16 KBMP7*	1	7.26	3.63	2.5	1-3/4

* Add to the part number either **-SS** or **-2507** depending on selected material. (Example: **16 KBMP7-SS**)

Thickness of 2507 fittings may be greater than shown, contact factory for details if an issue.

-SS Fitting bodies may be made from ASTM A479/UNS S20910

-XF ferrule option required MPI™ sizes 12 & 16 above 10,000 psi MAWP or for any pressure 2507 Super Duplex Tubing

-IX suffix is required when increasing working pressure to 20 ksi MAWP (per ASME 31.3 Chapter IX)

NOTE: Body shape may vary with size and configuration. Consult factory for size-specific drawing.

CBMP7

MPI™ to Male NPT Elbow

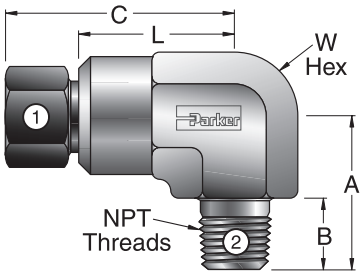

Parker Part No.	Inches							Working Pressure (PSIG)
	MPI™ Size #1	NPT Thread #2	A	B	C	L	W Th'k	
4-4 CBMP7-SS	1/4	1/4 - 18	1.13	.57	1.53	1.03	3/4	15,000
4-6 CBMP7-SS	1/4	3/8 - 18	1.13	.57	1.56	1.06	3/4	12,000
4-8 CBMP7-SS	1/4	1/2 - 18	1.41	.76	1.64	1.14	3/4	10,000
6-4 CBMP7-SS	3/8	1/4 - 18	1.23	.57	1.86	1.24	7/8	12,500
6-6 CBMP7-SS	3/8	3/8 - 18	1.23	.57	1.86	1.24	7/8	12,000
6-8 CBMP7-SS	3/8	1/2 - 14	1.41	.76	1.92	1.30	7/8	10,000

Sizes Limited due to forging size.

Not available in 2507 Material. If 316 SS Fitting is used with 2507 Tubing, Ferrules **MUST** be preset.

For 2507 fitting applications use an elbow and tube end adapter (EBMP7 & T7HF) in place of CBMP7.

-IX option not available on this adapter style

SBMP7

MPI™ to
Male Branch NPT Tee

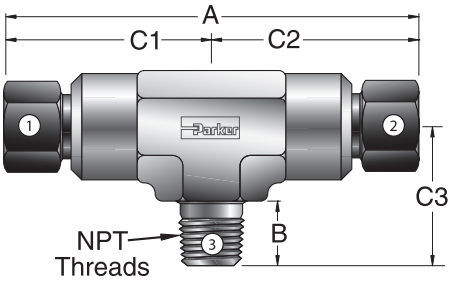

Parker Part No.	Inches									Working Pressure (PSIG)
	MPI™ Size #1	MPI™ Size #2	NPT Thread #3	A	C1	C2	C3	B	W Hex	
4-4-4 SBMP7-SS	1/4	1/4	1/4-18	3.25	1.63	1.63	1.13	.57	3/4	15,000
4-4-6 SBMP7-SS	1/4	1/4	3/8-18	3.25	1.63	1.63	1.13	.57	3/4	12,000
6-6-4 SBMP7-SS	3/8	3/8	1/4-18	3.83	1.86	1.86	1.23	.57	7/8	12,500
6-6-6 SBMP7-SS	3/8	3/8	3/8-18	3.83	1.86	1.86	1.23	.57	7/8	12,000

Sizes Limited due to forging size

Not available in 2507 Material.

If 316 SS Fitting is used with 2507 Tubing, Ferrules **MUST** be preset.

For 2507 fitting applications use a tee and tube end adapter (JBMP7 & T7HF) in place of SBMP7

-IX option not available on this adapter style

RBMP7

MPI™ to
Male Run NPT Tee

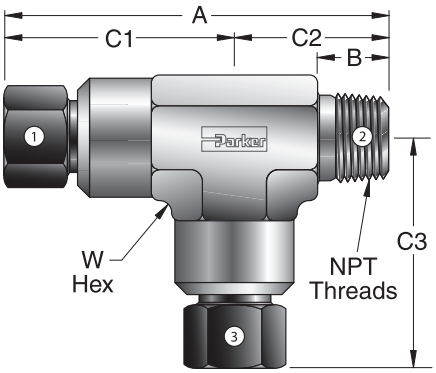

Parker Part No.	Inches									Working Pressure (PSIG)
	MPI™ Size #1	NPT Thread #2	MPI™ Size #3	A	C1	C2	C3	B	W Hex	
4-4-4 RBMP7-SS	1/4	1/4 - 18	1/4	2.76	1.63	1.13	1.63	.57	3/4	15,000
4-4-6 RBMP7-SS	1/4	1/4 - 18	3/8	2.85	1.63	1.23	1.86	.57	7/8	12,500
4-6-4 RBMP7-SS	1/4	3/8 - 18	1/4	2.76	1.63	1.13	1.63	.57	3/4	12,000
4-6-6 RBMP7-SS	1/4	3/8 - 18	3/8	2.85	1.63	1.23	1.86	.57	7/8	12,000
6-4-4 RBMP7-SS	3/8	1/4 - 18	1/4	3.09	1.86	1.23	1.63	.57	7/8	12,500
6-4-6 RBMP7-SS	3/8	1/4 - 18	3/8	3.09	1.86	1.23	1.86	.57	7/8	12,500
6-6-4 RBMP7-SS	3/8	3/8 - 18	1/4	3.09	1.86	1.23	1.63	.57	7/8	12,000
6-6-6 RBMP7-SS	3/8	3/8 - 18	3/8	3.09	1.86	1.23	1.86	.57	7/8	12,000

Sizes Limited due to forging size

Not available in 2507 Material.

If 316 SS Fitting is used with 2507 Tubing, Ferrules **MUST** be preset.

For 2507 fitting applications use a tee and tube end adapter (JBMP7 & T7HF) in place of RBMP7

-IX option not available on this adapter style

HBMP7

MPI™ Union Connector

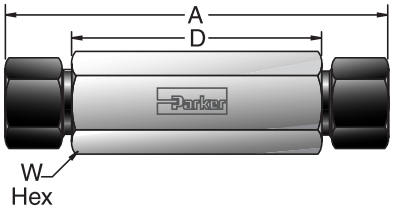

Parker Part No.	MPI™ Size	Inches A	Inches D	Inches W Hex
4-4 HBMP7*	1/4	2.88	1.88	5/8
6-4 HBMP7*	3/8 - 1/4	3.32	2.19	3/4
6-6 HBMP7*	3/8	3.44	2.19	3/4
8-4 HBMP7*	1/2 - 1/4	3.88	2.70	1
8-6 HBMP7*	1/2 - 3/8	4.01	2.70	1
8-8 HBMP7*	1/2	4.07	2.70	1
9-4 HBMP7*	9/16 - 1/4	3.95	2.70	1-1/16
9-6 HBMP7*	9/16 - 3/8	4.07	2.70	1-1/16
9-8 HBMP7*	9/16 - 1/2	4.13	2.70	1-1/16
9-9 HBMP7*	9/16	4.20	2.70	1-1/16
12-6 HBMP7*	3/4 - 3/8	4.76	3.25	1-3/8
12-9 HBMP7*	3/4 - 9/16	5.15	3.51	1-3/8
12-12 HBMP7*	3/4	5.08	3.31	1-3/8
16-16 HBMP7*	1	6.52	4.25	1-3/4

* Add to the part number either **-SS** or **-2507** depending on selected material. (Example: **16-16 HBMP7-SS**)

9/16" MPI™ size option not available in 2507 Super Duplex (Use 1/2" MPI™)

-XF ferrule option required MPI™ sizes 12 & 16 above 10,000 psi MAWP or for any pressure 2507 Super Duplex Tubing

-IX suffix is required when increasing working pressure to 20 ksi MAWP (per ASME 31.3 Chapter IX)

GBMP7

MPI™ Female to
NPT Union Connector

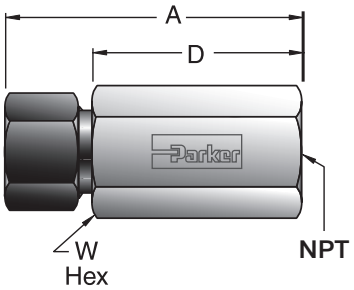

Parker Part No.	MPI™ Size	Inches NPT Thread	Inches A	Inches D	Inches W Hex	Working Pressure (PSIG)
4-2 GBMP7*	1/4	1/8 - 27	2.06	1.56	13/16	15,000
4-4 GBMP7*	1/4	1/4 - 18	2.25	1.75	1	15,000
4-6 GBMP7*	1/4	3/8 - 18	2.35	1.85	1-1/8	15,000
4-8 GBMP7*	1/4	1/2 - 14	2.58	2.08	1-3/8	15,000
6-2 GBMP7*	3/8	1/8 - 27	2.37	1.74	13/16	15,000
6-4 GBMP7*	3/8	1/4 - 18	2.56	1.93	1	15,000
6-6 GBMP7*	3/8	3/8 - 18	2.66	2.03	1-1/8	15,000
6-8 GBMP7*	3/8	1/2 - 14	2.87	2.24	1-3/8	15,000
8-4 GBMP7*	1/2	1/4 - 18	2.89	2.20	1	15,000
8-6 GBMP7*	1/2	3/8 - 18	2.99	2.30	1-1/8	15,000
8-8 GBMP7*	1/2	1/2 - 14	3.20	2.51	1-3/8	15,000
9-4 GBMP7*	9/16	1/4 - 18	2.68	2.18	1-3/8	15,000
9-6 GBMP7*	9/16	3/8 - 18	2.93	2.30	1-1/8	15,000
9-8 GBMP7*	9/16	1/2 - 14	3.26	2.51	1-3/8	15,000
12-8 GBMP7*	3/4	1/2 - 14	3.70	2.82	1-3/8	15,000
16-4 GBMP7*	1	1/4 - 18	4.22	3.09	1-3/4	12,500
16-8 GBMP7*	1	1/2 - 14	4.47	3.34	1-3/4	12,500

* Add to the part number either **-SS** or **-2507** depending on selected material. (Example: **16-8 GBMP7-SS**)

9/16" MPI™ size option not available in 2507 Super Duplex (Use 1/2" MPI™)

-XF ferrule option required MPI™ sizes 12 & 16 above 10,000 psi MAWP or for any pressure 2507 Super Duplex Tubing

-IX suffix is not available for this style fitting

MF GBMP7

MPI™ Female to Medium Pressure C&T Female Union Connector

(collar and gland sold separately)

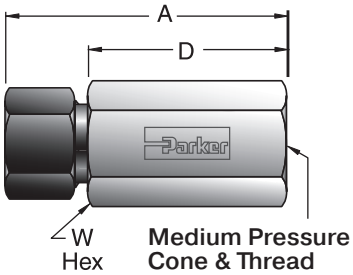

	Inches				
Parker Part No.	MPI™ Size	Med. Pressure C&T Size	A	D	W Hex
4-4MF GBMP7*	1/4	4	2.13	1.63	5/8
4-9MF GBMP7*	1/4	9	2.5	2.00	1
6-6MF GBMP7*	3/8	6	2.55	1.92	3/4
6-9MF GBMP7*	3/8	9	2.74	2.11	1
6-12MF GBMP7*	3/8	12	3.2	2.57	1-3/8
8-6MF GBMP7*	1/2	6	2.9	2.21	1
8-9MF GBMP7*	1/2	9	3.01	2.32	1
9-6MF GBMP7*	9/16	6	2.94	2.19	1-1/16
9-9MF GBMP7*	9/16	9	3.06	2.32	1-1/16
12-9MF GBMP7*	3/4	9	3.82	2.94	1-3/8
12-12MF GBMP7*	3/4	12	3.85	2.97	1-3/8

* Add to the part number either **-SS** or **-2507** depending on selected material. (Example: **12-12MF GBMP7-SS**)

9/16" MPI™ size option not available in 2507 Super Duplex (Use 1/2" MPI™)**-XF** ferrule option required MPI™ sizes 12 & 16 above 10,000 psi MAWP or for any pressure 2507 Super Duplex Tubing

-IX suffix is required when increasing working pressure to 20 ksi MAWP (per ASME 31.3 Chapter IX)

NOTE: Ordering information for Medium & High Pressure Collar and Gland Nuts, see page 37.

WBMP7

MPI™ Bulkhead Union Connector

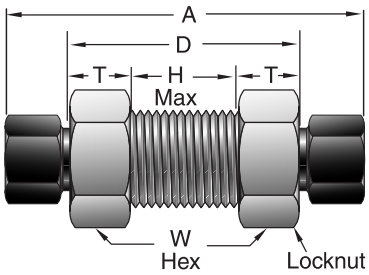

	Inches						
Parker Part No.	MPI™ Size	A	D	H Max.	R** Thread	T	W Hex
4-4 WBMP7*	1/4	2.88	1.88	.88	3/4 - 20	.50	1
6-6 WBMP7*	3/8	3.44	2.19	1.07	7/8 - 20	.56	1-1/8
8-8 WBMP7*	1/2	4.07	2.70	1.32	1-1/8 - 20	.69	1-3/8
8-9 WBMP7*	1/2 - 9/16	4.20	2.70	1.32	1-1/8 - 20	.69	1-3/8
9-8 WBMP7*	9/16 - 1/2	4.20	2.70	1.32	1-1/8 - 20	.69	1-3/8
9-9 WBMP7*	9/16	4.20	2.70	1.32	1-1/8 - 20	.69	1-3/8
12-12 WBMP7*	3/4	5.08	3.31	1.56	1-7/16 - 18	.88	1-7/8
16-16 WBMP7*	1	6.52	4.25	2.00	1-7/8 - 12	1.13	2-1/2

* Add to the part number either **-SS** or **-2507** depending on selected material. (Example: **16-16 WBMP7-SS**)

** Bulkhead hole approximately 1/64" (.015") larger than R Thread major diameter.

9/16" MPI™ size option not available in 2507 Super Duplex (Use 1/2" MPI™)

-XF ferrule option required MPI™ sizes 12 & 16 above 10,000 psi MAWP or for any pressure 2507 Super Duplex Tubing

-IX suffix is required when increasing working pressure to 20 ksi MAWP (per ASME 31.3 Chapter IX)

GH2BMP7

MPI™ to Female NPT
Bulkhead Union Connector

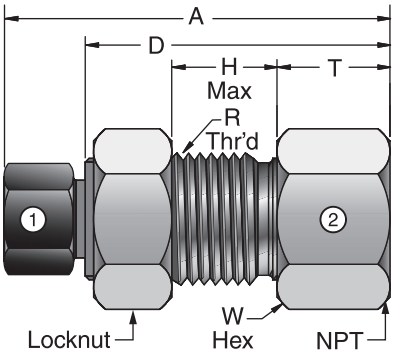

Parker Part No.	Inches								Working Pressure (PSIG)
	MPI™ Size #1	NPT Thread #2	A	D	H Max.	R** Thread	T	W Hex	
4-4 GH2BMP7*	1/4	1/4 -18	2.38	1.88	.63	3/4 - 20	.75	1	15,000
6-8 GH2BMP7*	3/8	1/2 -14	3.13	2.50	.69	7/8 - 20	1.25	1-3/8	15,000
6-12 GH2BMP7*	3/8	3/4 -14	3.19	2.56	.69	7/8 - 20	1.31	1-1/2	10,000
8-12 GH2BMP7*	1/2	3/4 -14	3.50	2.81	.81	1-1/8 - 20	1.31	1-1/2	10,000
9-4 GH2BMP7*	9/16	1/4 -18	2.82	2.07	.70	1-1/8 - 20	.69	1-3/8	15,000

* Add to the part number either **-SS** or **-2507** depending on selected material. (Example: **9-4 GH2BMP7-SS**)

9/16" MPI™ size option not available in 2507 Super Duplex (Use 1/2" MPI™)

** Bulkhead hole approximately 1/64" (.015") larger than R Thread major diameter.

-XF ferrule option required MPI™ sizes 12 & 16 above 10,000 psi MAWP or for any pressure 2507 Super Duplex Tubing

-IX suffix iis not available for this style fitting

X42HBMP7

Medium Pressure Cone & Thread to
MPI™ Connector

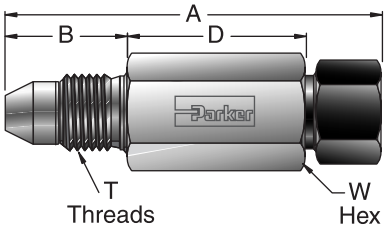

Size	X42 Assemby Torque	Orifice I.D. (inches)
4	20 ft-lbf.	.109
6	30 ft-lbf.	.206
9	55 ft-lbf.	.360
12	90 ft-lbf.	.438

Parker Part No.	Inches						
	Medium Pressure Adapter	MPI™ Size	A	B	D	T Thread	W Hex
4-4 X42HBMP7*	1/4	1/4	2.34	.81	1.03	7/16 - 20	5/8
4-6 X42HBMP7*	1/4	3/8	2.80	.81	1.37	7/16 - 20	3/4
4-9 X42HBMP7*	1/4	9/16	3.31	.81	1.75	7/16 - 20	1-1/16
6-4 X42HBMP7*	3/8	1/4	2.47	.94	1.03	9/16 - 18	3/4
6-6 X42HBMP7*	3/8	3/8	2.93	.94	1.37	9/16 - 18	3/4
6-8 X42HBMP7*	3/8	1/2	3.28	.94	1.65	9/16 - 18	1
6-9 X42HBMP7*	3/8	9/16	3.44	.94	1.75	9/16 - 18	1-1/16
9-4 X42HBMP7*	9/16	1/4	2.56	1.13	.93	13/16 - 16	7/8
9-6 X42HBMP7*	9/16	3/8	2.85	1.13	1.10	13/16 - 16	7/8
9-8 X42HBMP7*	9/16	1/2	3.16	1.13	1.35	13/16 - 16	1
9-9 X42HBMP7*	9/16	9/16	3.41	1.13	1.54	13/16 - 16	1-1/16
9-12 X42HBMP7*	9/16	3/4	4.20	1.13	2.19	13/16 - 16	1-3/8
12-9 X42HBMP7*	3/4	9/16	3.55	1.31	1.35	3/4 - 14 NPS	1-1/16
12-12 X42HBMP7*	3/4	3/4	4.15	1.31	1.96	3/4 - 14 NPS	1-3/8
12-16 X42HBMP7*	3/4	1	5.27	1.31	2.83	3/4 - 14 NPS	1-3/4

* Add to the part number either **-SS** or **-2507** depending on selected material. (Example: **12-16 X42HBMP7-SS**)

9/16" MPI™ size option not available in 2507 Super Duplex (Use 1/2" MPI™)

-XF ferrule option required MPI™ sizes 12 & 16 above 10,000 psi MAWP or for any pressure 2507 Super Duplex Tubing

-IX suffix is required when increasing working pressure to 20 ksi MAWP (per ASME 31.3 Chapter IX)

X41HBMP7

High Pressure Cone & Thread to MPI™ Connector

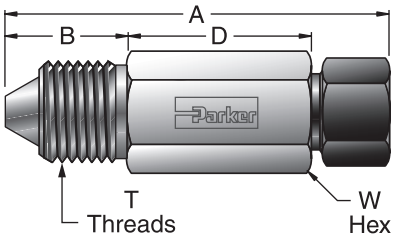

Sizes	X41 Assemby Torque	Orifice I.D. (inches)
4	10 ft-lbf.	.093
6	20 ft-lbf.	.156
9	25 ft-lbf.	.188

	Inches						
Parker Part No.	High Pressure Adapter	MPI™ Size	A	B	D	T Thread	W Hex
4-4 X41HBMP7*	1/4	1/4	2.25	.83	1.03	9/16 - 18	5/8
4-6 X41HBMP7*	1/4	3/8	2.71	.83	1.37	9/16 - 18	3/4
6-4 X41HBMP7*	3/8	1/4	2.52	.92	1.10	3/4 - 16	13/16
6-6 X41HBMP7*	3/8	3/8	2.92	.92	1.37	3/4 - 16	13/16
6-9 X41HBMP7*	3/8	9/16	3.37	.92	1.70	3/4 - 16	1-1/16
9-6 X41HBMP7*	9/16	3/8	3.12	1.13	1.37	1-1/8 - 12	1-3/16
9-9 X41HBMP7*	9/16	9/16	3.58	1.13	1.70	1-1/8 - 12	1-3/16
9-10 X41HBMP7*	9/16	5/8	3.69	1.13	1.81	1-1/8 - 12	1-3/16
9-12 X41HBMP7*	9/16	3/4	4.03	1.13	2.02	1-1/8 - 12	1-3/8

* Add to the part number either **-SS** or **-2507** depending on selected material. (Example: **9-12 X41HBMP7-SS**)

9/16" MPI™ size option not available in 2507 Super Duplex (Use 1/2" MPI™)

-XF ferrule option required MPI™ sizes 12 & 16 above 10,000 psi MAWP or for any pressure 2507 Super Duplex Tubing

-IX suffix is required when increasing working pressure to 20 ksi MAWP (per ASME 31.3 Chapter IX)

FBMP7

MPI™ to Male NPT Connector

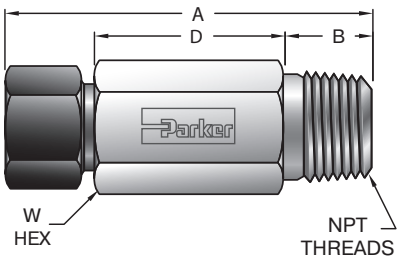

	Inches						Working Pressure (PSIG)
Parker Part No.	MPI™ Size	NPT Thread	A	B	D	W Hex	
4-2 FBMP7*	1/4	1/8 - 27	1.91	.38	1.03	5/8	15,000
4-4 FBMP7*	1/4	1/4 - 18	2.10	.57	1.03	5/8	15,000
4-6 FBMP7*	1/4	3/8 - 18	2.00	.57	.93	3/4	15,000
4-8 FBMP7*	1/4	1/2 - 14	2.17	.76	.91	7/8	15,000
6-4 FBMP7*	3/8	1/4 - 18	2.43	.57	1.24	3/4	15,000
6-6 FBMP7*	3/8	3/8 - 18	2.43	.57	1.24	3/4	15,000
6-8 FBMP7*	3/8	1/2 - 14	2.48	.76	1.10	7/8	15,000
8-6 FBMP7*	1/2	3/8 - 18	2.85	.57	1.60	1	15,000
8-8 FBMP7*	1/2	1/2 - 14	2.81	.76	1.37	1	15,000
9-6 FBMP7*	9/16	3/8 - 18	2.91	.57	1.59	1-1/16	15,000
9-8 FBMP7*	9/16	1/2 - 14	3.04	.76	1.53	1-1/16	15,000
12-8 FBMP7*	3/4	1/2 - 14	3.85	.76	2.21	1-3/8	15,000
12-12 FBMP7*	3/4	3/4 - 14	3.46	.76	1.82	1-3/8	10,000
16-12 FBMP7*	1	3/4 - 14	4.53	.76	2.64	1-3/4	10,000
16-16 FBMP7*	1	1 - 11.5	4.58	.95	2.50	1-3/4	10,000

* Add to the part number either **-SS** or **-2507** depending on selected material. (Example: **16-16 FBMP7-SS**)

9/16" MPI™ size option not available in 2507 Super Duplex (Use 1/2" MPI™)

-XF ferrule option required MPI™ sizes 12 & 16 above 10,000 psi MAWP or for any pressure 2507 Super Duplex Tubing

-IX option not available on this adapter style

XHBMP7

37° Flare to MPI™ Connector

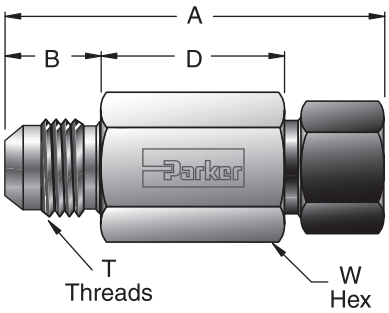

Parker Part No.	Inches							Working Pressure (PSIG)
	37° Flare Adapter	MPI™ Size	A	B	D	T Thread	W Hex	
4-4 XHBMP7*	1/4	1/4	2.08	.55	1.03	7/16 - 20	5/8	15,000
4-6 XHBMP7*	1/4	3/8	2.54	.55	1.37	7/16 - 20	3/4	15,000
4-8 XHBMP7*	1/4	1/2	2.90	.55	1.66	7/16 - 20	1	15,000
4-9 XHBMP7*	1/4	9/16	2.96	.55	1.66	7/16 - 20	1-1/16	15,000
4-10 XHBMP7*	1/4	5/8	3.14	.55	1.84	7/16 - 20	1-3/16	15,000
6-4 XHBMP7*	3/8	1/4	1.97	.56	.92	9/16 - 18	5/8	12,500
6-6 XHBMP7*	3/8	3/8	2.24	.56	1.06	9/16 - 18	3/4	12,500
6-8 XHBMP7*	3/8	1/2	2.90	.56	1.66	9/16 - 18	1	12,500
6-9 XHBMP7*	3/8	9/16	2.97	.56	1.66	9/16 - 18	1-1/16	12,500
8-6 XHBMP7*	1/2	3/8	2.34	.66	1.06	3/4 -16	3/16	12,500
8-8 XHBMP7*	1/2	1/2	2.69	.66	1.34	3/4 -16	1	12,500
8-9 XHBMP7*	1/2	9/16	2.77	.66	1.36	3/4 -16	1-1/16	12,500
8-12 XHBMP7*	1/2	3/4	3.38	.86	1.63	3/4 -16	1-3/8	12,500
16-16 XHBMP7*	1	1	4.23	.91	2.19	1-5/16 -12	1-3/4	7,200

* Add to the part number either **-SS** or **-2507** depending on selected material. (Example: **16-16 XHBMP7-SS**)

9/16" MPI™ size option not available in 2507 Super Duplex (Use 1/2" MPI™)

-XF ferrule option required MPI™ sizes 12 & 16 above 10,000 psi MAWP or for any pressure 2507 Super Duplex Tubing

-IX option not available on this adapter style

MP7H2BX

37° Flare Bulkhead to MPI™ Connector

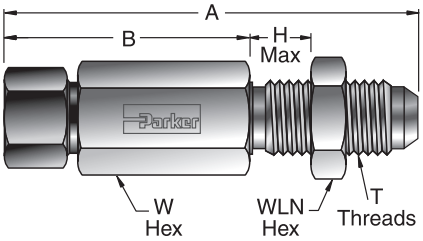

Parker Part No.	Inches								Working MAWP Pressure (PSIG)
	37° Flare Adapter	MPI™ Size	A	C	H Max.	T Thread	WLN Hex	W Hex	
4-4 MP7H2BX*	1/4	1/4	2.76	1.53	.40	7/16 - 20	11/16	5/8	15,000
6-6 MP7H2BX*	3/8	3/8	3.24	1.93	.48	9/16 - 18	13/16	3/4	12,500
8-8 MP7H2BX*	1/2	1/2	3.44	1.97	.50	3/4 - 16	1	1	12,500
9-8 MP7H2BX*	1/2	9/16	3.76	2.29	.50	3/4 - 16	1	1-1/16	12,500

* Add to the part number either **-SS** or **-2507** depending on selected material. (Example: **9-8 MP7H2BX-SS**)

9/16" MPI™ size option not available in 2507 Super Duplex (Use 1/2" MPI™)

** Bulkhead hole approximately 1/64" (.015") larger than thread major diameter.

-XF ferrule option required MPI™ sizes 12 & 16 above 10,000 psi MAWP or for any pressure 2507 Super Duplex Tubing

-IX option not available on this adapter style

M40HBMP7

Type "M" High Pressure Hose to MPI™ Connector

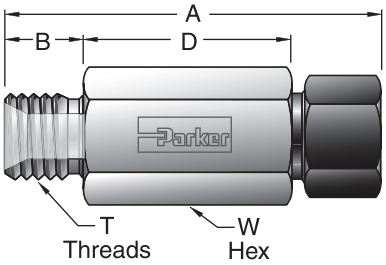

	Inches						
Parker Part No.	** Hose Adapter	MPI™ Size	A	B	D	T Thread	W Hex
6-4 M40HBMP7*	-6	1/4	2.03	.50	1.03	9/16 - 18	5/8
6-6 M40HBMP7*	-6	3/8	2.45	.50	1.32	9/16 - 18	3/4
8-6 M40HBMP7*	-8	3/8	2.57	.63	1.32	3/4 - 16	13/16
8-8 M40HBMP7*	-8	1/2	2.90	.63	1.59	3/4 - 16	1
8-9 M40HBMP7*	-8	9/16	2.97	.63	1.59	3/4 - 16	1-1/16
11-8 M40HBMP7*	-11	1/2	2.89	.63	1.58	1 - 12	1-1/16
11-9 M40HBMP7*	-11	9/16	2.95	.63	1.58	1 - 12	1-1/16
11-12 M40HBMP7*	-11	3/4	3.59	.63	2.08	1 -12	1-3/8
16-16 M40HBMP7*	-16	1	3.88	.63	2.13	1-5/16 -12	1-3/4

* Add to the part number either **-SS** or **-2507** depending on selected material. (Example: **16-16 M40HBMP7-SS**)

9/16" MPI™ size not available in 2507 Super Duplex (1/2" MPI™ size only)

** Adapts to Parker Polyflex Type "M" Swivel Hose Connection.

-XF ferrule option required MPI™ sizes 12 & 16 above 10,000 psi MAWP or for any pressure 2507 Super Duplex Tubing

-IX suffix is required when increasing working pressure to 20 ksi MAWP (per ASME 31.3 Chapter IX)

MP7HBA

MPI™ to (SAE J1926) Male O-Ring Connector

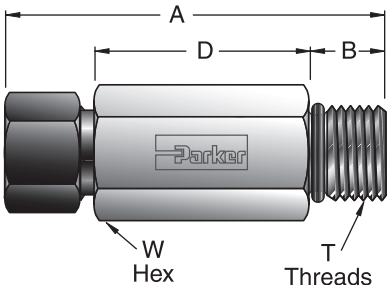

	Inches							Working MAWP Pressure (PSIG)
Parker Part No.	MPI™ Size	SAE** End	A	B	D	T Thread	W Hex	
4-4 MP7HBA*	1/4	1/4	1.90	.43	.97	7/16 - 20	5/8	12,500
4-6 MP7HBA*	1/4	3/8	1.94	.47	.97	9/16 - 18	11/16	12,500
4-8 MP7HBA*	1/4	1/2	1.97	.55	.91	3/4 - 16	7/8	12,500
6-4 MP7HBA*	3/8	1/4	2.41	.43	1.35	7/16 - 20	3/4	12,500
6-6 MP7HBA*	3/8	3/8	2.20	.47	1.10	9/16 - 18	3/4	12,500
6-8 MP7HBA*	3/8	1/2	2.23	.55	1.05	3/4 - 16	7/8	12,500
8-4 MP7HBA*	1/2	1/4	2.81	.43	1.69	7/16 - 20	1	12,500
8-6 MP7HBA*	1/2	3/8	2.82	.47	1.66	9/16 - 18	1	12,500
8-8 MP7HBA*	1/2	1/2	2.60	.55	1.36	3/4 - 16	1	12,500
9-6 MP7HBA*	9/16	3/8	2.89	.47	1.67	9/16 -18	1-1/16	12,500
9-8 MP7HBA*	9/16	1/2	2.89	.55	1.59	3/4 -16	1-1/16	12,500

* Add to the part number either **-SS** or **-2507** depending on selected material. (Example: **9-8 MP7HBA-SS**)

9/16" MPI™ size option not available in 2507 Super Duplex (Use 1/2" MPI™)

** All male o-ring ends for MPI™ fittings are heavy duty and comply with SAE J1926/2. This end has maximum thread engagement for strength and requires the minimum full thread engagement specified in SAE J1926/1 for the female port.

Standard O-ring material is Nitrile #N0552-90.

-XF ferrule option required MPI™ sizes 12 & 16 above 10,000 psi MAWP or for any pressure 2507 Super Duplex Tubing

-IX option not available on this adapter style

TRBMP7

MPI™ Tube Stub Reducer

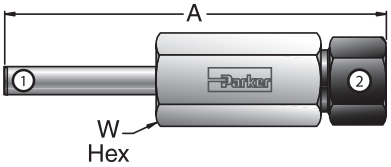

Parker Part No.	Inches			
	MPI™ Tube Stub #1	MPI™ Size #2	A	W Hex
4-6 TRBMP7*	1/4	3/8	3.49	3/4
4-8 TRBMP7*	1/4	1/2	3.94	1
4-9 TRBMP7*	1/4	9/16	4.00	1-1/16
6-4 TRBMP7*	3/8	1/4	3.30	5/8
6-8 TRBMP7*	3/8	1/2	4.17	1
6-9 TRBMP7*	3/8	9/16	4.24	1-1/16
8-4 TRBMP7*	1/2	1/4	3.56	5/8
8-6 TRBMP7*	1/2	3/8	3.99	3/4
9-4 TRBMP7-*	9/16	1/4	3.63	5/8
9-6 TRBMP7-*	9/16	3/8	4.06	3/4
9-12 TRBMP7-*	9/16	3/4	4.97	1-3/8
12-4 TRBMP7-*-Z6	3/4	1/4	4.17	13/16
12-6 TRBMP7-*-Z6	3/4	3/8	4.42	13/16
12-8 TRBMP7-*-Z6	3/4	1/2	4.76	1
12-9 TRBMP7-*-Z6	3/4	9/16	4.82	1-1/16
16-8 TRBMP7-*-Z6	1	1/2	4.96	11/16
16-9 TRBMP7-*-Z6	1	9/16	5.01	1-1/16
16-12 TRBMP7-*-Z6	1	3/4	5.38	1-3/8

* Add to the part number either **-SS** or **-2507** depending on selected material. (Example: **16-12 TRBMP7-SS**)

9/16" MPI™ size option not available in 2507 Super Duplex (Use 1/2" MPI™)

Add "**-Z6**" suffix for part factory assembled with preset ferrules and nuts. **NOTE: -Z6** option is mandatory for MPI™ sizes 12 & 16

** **-IX** suffix is required when increasing rated working pressure to 20 ksi MAWP (per ASME 31.3 Chapter IX)

MF T7HG

MPI™ Tube Stub X
Medium Pressure Port

(Collar and Gland sold seperately)

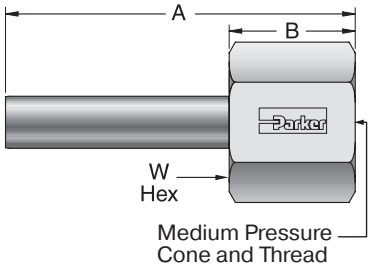

Parker Part No.	Inches				
	MPI™ Tube Stub	Medium Pressure C&T Port	A	B	W Hex
9-9MF T7HG*	9/16	9/16	3.06	1.12	1
9-12MF T7HG*	9/16	3/4	3.57	1.63	1-3/8
12-9MF T7HG-*-Z6	3/4	9/16	3.41	1.12	1
16-9MF T7HG-*-Z6	1	9/16	4	1.12	1-1/16

* Add to the part number either **-SS** or **-2507** depending on selected material. (Example: **9-9MF T7HG-SS**)

9/16" MPI™ size not available in 2507 Super Duplex (1/2" MPI™ only)

Add "**-Z6**" suffix for part factory assembled with preset ferrules and nuts. **NOTE: -Z6** option is mandatory for MPI™ sizes 12 & 16

** **-IX** suffix is required when increasing rated working pressure to 20 ksi MAWP (per ASME 31.3 Chapter IX)

NOTE: Ordering information for Medium & High Pressure Collar and Gland Nuts, see **page 37**.

T7HG

MPI™ Tube Stub to Female NPT Pipe

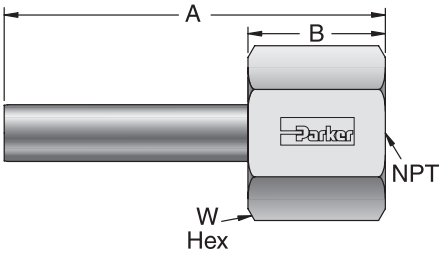

Parker Part No.	Inches						
	MPI™ Tube Stub	Female NPT End	A	B	NPT Thread	W Hex	Working Pressure PSIG
4-2 T7HG*	1/4	1/8	2.09	.83	1/8 - 27	13/16	15,000
4-4 T7HG*	1/4	1/4	2.28	.91	1/4 - 18	1	15,000
4-8 T7HG*	1/4	1/2	2.64	1.27	1/2 - 14	1-3/8	15,000
6-2 T7HG*	3/8	1/8	2.33	.83	1/8 - 27	13/16	15,000
6-4 T7HG*	3/8	1/4	2.52	.91	1/4 - 18	1	15,000
6-6 T7HG*	3/8	3/8	2.55	.94	3/8 - 18	1-1/8	15,000
6-8 T7HG*	3/8	1/2	2.88	1.27	1/2 - 14	1-3/8	15,000
8-2 T7HG*	1/2	1/8	2.60	.83	1/8 - 27	13/16	15,000
8-4 T7HG*	1/2	1/4	2.79	.91	1/4 - 18	1	15,000
8-6 T7HG*	1/2	3/8	2.82	.94	3/8 - 18	1-1/8	15,000
8-8 T7HG*	1/2	1/2	3.14	1.27	1/2 - 14	1-3/8	15,000
9-4 T7HG*	9/16	1/4	2.84	.91	1/4 - 18	1	15,000
9-6 T7HG*	9/16	3/8	2.88	.94	3/8 - 18	1-1/8	15,000
9-8 T7HG*	9/16	1/2	3.20	1.27	1/2 - 14	1-3/8	15,000
12-8 T7HG-*-Z6	3/4	1/2	3.55	1.27	1/2 - 14	1-3/8	15,000
12-12 T7HG-*-Z6	3/4	3/4	3.60	1.31	3/4 - 11 1/2	1-1/2	10,000
16-16 T7HG-*-Z6	1	1	4.38	1.50	1 - 11 1/2	1-7/8	10,000

* Add to the part number either **-SS** or **-2507** depending on selected material. (Example: **9-8 T7HG-SS**)

9/16" MPI™ size not available in 2507 Super Duplex (1/2" MPI™ size only)

Add "**-Z6**" suffix for part factory assembled with preset ferrules and nuts. **NOTE: -Z6** option is mandatory for MPI™ sizes 12 & 16

** **-IX** option is not available on this adapter style.

HF GM7

MPI™ Male End to High Pressure Cone & Thread Port

(Collar and Gland sold seperately)

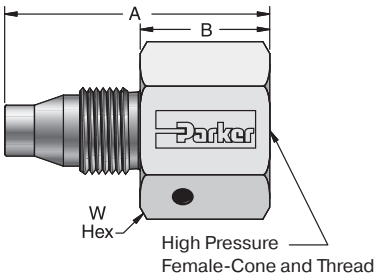

HP C&T Assemby Torque	Orifice (inches)
4=10 ft-lb.	.094
6=20 ft-lb.	.125
9=25 ft-lb.	.186

Parker Part No.	Inches							
	MPI™ Male Tube[1]	High Press. C&T Port	A	B	C&T Thread	W Hex	Working Pressure (PSIG)	**-IX** Working Pressure (PSIG)
4-4HF GM7*	1/4	1/4	1.57	.69	9/16 - 18	3/4	15,000	20,000
6-4HF GM7*	3/8	1/4	1.68	.69	9/16 - 18	3/4	15,000	20,000
6-6HF GM7*	3/8	3/8	1.87	.88	3/4 - 16	1	15,000	20,000
8-4HF GM7*	1/2	1/4	1.89	.69	9/16 - 18	15/16	15,000	20,000
8-6HF GM7*	1/2	3/8	2.07	.88	3/4 - 16	1	15,000	20,000
9-4HF GM7*	9/16	1/4	1.89	.69	9/16 - 18	1	15,000	20,000
9-6HF GM7*	9/16	3/8	2.07	.88	3/4 - 16	1	15,000	20,000
12-4HF GM7*	3/4	1/4	2.17	.75	9/16 - 18	1-1/4	15,000	20,000
12-6HF GM7*	3/4	3/8	2.30	.88	3/4 - 16	1-1/4	15,000	20,000

* Add to the part number either **-SS** or **-2507** depending on selected material. (Example: **12-6HF GM7-SS**)

9/16" MPI™ size not available in 2507 Super Duplex (1/2" MPI™ size only)

[1]Assemble 1/4 to 1/2 turn from finger tight & lubricate threads & taper before each remake.

-IX suffix is required when increasing working pressure to 20 ksi MAWP (per ASME 31.3 Chapter IX)

NOTE: Ordering information for Medium & High Pressure Collar and Gland Nuts, see **page 37**.

MF GM7

MPI™ Male End to
Medium Pressure Cone & Thread Port

(Collar and Gland sold seperately)

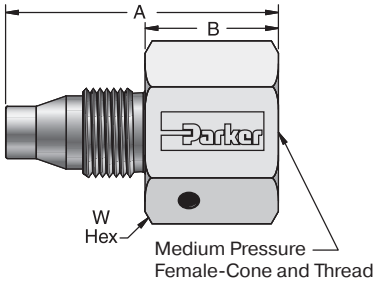

MP C&T Assemby Torque	Orifice (inches)
4=20 ft-lb.	.109
6=30 ft-lb.	.203
9=55 ft-lb.	.312
12=90 ft-lb.	.438
16=135 ft-lb.	.562

	Inches					
Parker Part No.	MPI™ Male Tube[1]	Medium Press. C&T Port	A	B	C&T Thread	W Hex
6-6MF GM7*	3/8	3/8	1.87	.88	9/16 - 18	3/4
8-9MF GM7*	1/2	9/16	2.16	.96	13/16 - 16	1
9-6MF GM7*	9/16	3/8	2.07	.88	9/16 - 18	1
9-9MF GM7*	9/16	9/16	2.16	.96	13/16 - 16	1
12-9MF GM7*	3/4	9/16	2.42	1.00	13/16 - 16	1-1/4
12-12MF GM7*	3/4	3/4	2.77	1.35	3/4 - 14NPS	1-3/8

* Add to the part number either **-SS** or **-2507** depending on selected material. (Example: **12-12MF GM7-SS**)

9/16" MPI™ size not available in 2507 Super Duplex (1/2" MPI™ size only)

[1]Assemble 1/4 to 1/2 turn from finger tight & lubricate threads & taper before each remake.

-IX suffix is required when increasing working pressure to 20 ksi MAWP (per ASME 31.3 Chapter IX)

NOTE: Ordering information for Medium & High Pressure Collar and Gland Nuts, see **page 37**.

GM7

MPI™ Male End to Female NPT

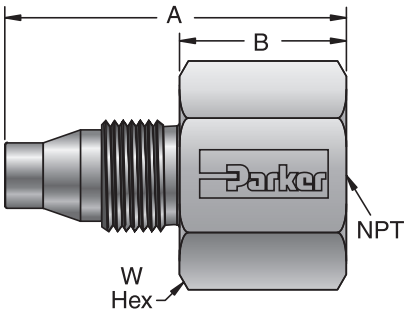

	Inches						Working Pressure (PSIG)
Parker Part No.	MPI™ Male Tube[1]	Female NPT End	A	B	NPT Thread	W Hex	
4-4 GM7*	1/4	1/4	1.73	.85	1/4 - 18	1	15,000
4-6 GM7*	1/4	3/8	1.83	.95	3/8 - 18	1-1/8	15,000
6-4 GM7*	3/8	1/4	1.84	.85	1/4 - 18	1	15,000
6-6 GM7*	3/8	3/8	1.94	.95	3/8 - 18	1-1/8	15,000
6-8 GM7*	3/8	1/2	2.17	1.17	1/2 - 14	1-3/8	15,000
8-4 GM7*	1/2	1/4	2.05	.85	1/4 - 18	1	15,000
8-6 GM7*	1/2	3/8	2.15	.95	3/8 - 18	1-1/8	15,000
8-8 GM7*	1/2	1/2	2.37	1.17	1/2 - 14	1-3/8	15,000
9-4 GM7*	9/16	1/4	2.05	.85	1/4 - 18	1	15,000
9-6 GM7*	9/16	3/8	2.15	.95	3/8 - 18	1-1/8	15,000
9-8 GM7*	9/16	1/2	2.37	1.17	1/2 - 14	1-3/8	15,000
12-4 GM7*	3/4	1/4	2.17	.75	1/4 - 18	1-1/4	15,000
12-6 GM7*	3/4	3/8	2.17	.75	3/8 - 18	1-1/4	15,000
12-8 GM7*	3/4	1/2	2.59	1.17	1/2 - 14	1-3/8	15,000

* Add to the part number either **-SS** or **-2507** depending on selected material. (Example: **12-8 GM7-SS**)

9/16" MPI™ size not available in 2507 Super Duplex (1/2" MPI™ size only)

[1]Assemble 1/4 to 1/2 turn from finger tight & lubricate threads & taper before each remake.

** Working Pressure shown is same no matter which ASME Standard is used.

-IX option is not available on this adapter style

T7HBT7

MPI™ Tube Port Connector

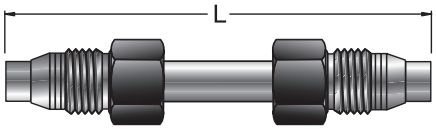

Note:
Each fitting consists of MPI™ tubing with preset nuts and ferrules. The alloy used for the nut will be the same as the tubing.

Refer to Tables 1-5 shown on pages 14-16 for the maximum working pressure of the 316 and 2507 MPI™ tubing.

	Inches	
Parker Part No.	Tube Size	L
*4 T7HBT7-SS	1/4	2.83
4 T7HBT7-SS 4.0	1/4	4.00
4 T7HBT7-SS 6.0	1/4	6.00
4 T7HBT7-SS 8.0	1/4	8.00
4 T7HBT7-SS 10.0	1/4	10.00
4 T7HBT7-SS 12.0	1/4	12.00
*6 T7HBT7-SS	3/8	3.19
6 T7HBT7-SS 4.0	3/8	4.00
6 T7HBT7-SS 6.0	3/8	6.00
6 T7HBT7-SS 8.0	3/8	8.00
6 T7HBT7-SS 10.0	3/8	10.00
6 T7HBT7-SS 12.0	3/8	12.00
*9 T7HBT7-SS	9/16	3.85
9 T7HBT7-SS 6.0	9/16	6.00
9 T7HBT7-SS 8.0	9/16	8.00
9 T7HBT7-SS 10.0	9/16	10.00
9 T7HBT7-SS 12.0	9/16	12.00
*12 T7HBT7-SS	3/4	4.55
12 T7HBT7-SS 6.0	3/4	6.00
12 T7HBT7-SS 8.0	3/4	8.00
12 T7HBT7-SS 10.0	3/4	10.00
12 T7HBT7-SS 12.0	3/4	12.00

Assemble 1/2 turn from finger tight.

*Same Assembled Length as MP7PC Port Connector.

Replace **"SS"** with **"2507"** for **Super Duplex**

9/16 MPI™ size not available in 2507 Super Duplex (1/2" MPI™ size only)

-**XF** ferrule option required sizes 12 & 16 above

-IX suffix is required when increasing working pressure to 20 ksi MAWP (per ASME 31.3 Chapter IX)

X42HT7

Medium Pressure Cone & Thread to MPI™ Tube Stub

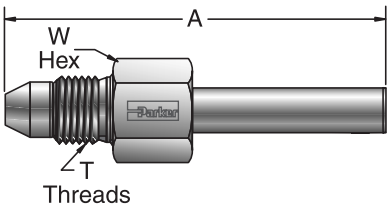

Size	MP Cone & Thread	Orifice I.D. (inches)
4	20 ft-lbf.	.109
6	30 ft-lbf.	.206
9	55 ft-lbf.	.360
12	90 ft-lbf.	.438

	Inches				
Parker Part No.	Medium Pressure Adapter Size	MPI™ Tube Stub	A	T Thread	W Hex
4-4 X42HT7*	1/4	1/4	2.68	7/16 - 20	5/8
4-6 X42HT7*	1/4	3/8	2.92	7/16 - 20	5/8
4-8 X42HT7*	1/4	1/2	3.18	7/16 - 20	5/8
4-9 X42HT7*	1/4	9/16	3.25	7/16 - 20	5/8
6-4 X42HT7*	3/8	1/4	2.94	9/16 - 18	3/4
6-6 X42HT7*	3/8	3/8	3.17	9/16 - 18	3/4
6-8 X42HT7*	3/8	1/2	3.44	9/16 - 18	3/4
6-9 X42HT7*	3/8	9/16	3.50	9/16 - 18	3/4
9-4 X42HT7*	9/16	1/4	3.25	13/16 - 16	7/8
9-6 X42HT7*	9/16	3/8	3.49	13/16 - 16	7/8
9-8 X42HT7*	9/16	1/2	3.75	13/16 - 16	7/8
9-9 X42HT7*	9/16	9/16	3.81	13/16 - 16	7/8
9-12 X42HT7-*-Z6	9/16	3/4	4.16	13/16 - 16	7/8
9-16 X42HT7-*-Z6	9/16	1	4.88	13/19-16	1-1/8
12-9 X42HT7*	3/4	9/16	4.00	3/4 - 14 NPS	1-1/8
12-12 X42HT7-*-Z6	3/4	3/4	4.35	3/4 - 14 NPS	1-1/8
12-16 X42HT7-*-Z6	3/4	1	4.94	3/4 - 14 NPS	1-1/8

* Add to the part number either **-SS** or **-2507** depending on selected material. (Example: **12-16 X42HT7-SS**)

9/16" MPI™ size not available in 2507 Super Duplex (1/2" MPI™ size only)

Add "**-Z6**" suffix for part factory assembled with preset ferrules and nuts. **NOTE: -Z6** option is mandatory for MPI™ sizes 12 & 16

** **-IX** suffix is required when increasing rated working pressure to 20 ksi MAWP (per ASME 31.3 Chapter IX)

X41HT7

High Pressure Cone & Thread to MPI™ Tube Stub

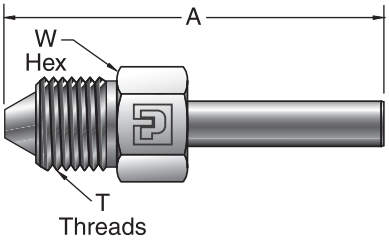

Size	HP Cone & Thread	Orifice (inches)
4	10 ft-lbf.	.093
6	20 ft-lbf.	.156
9	25 ft-lbf.	.188

	Inches				
Parker Part No.	High Pressure Adapter Size	MPI™ Tube Stub	A	T Thread	W Hex
4-4 X41HT7*	1/4	1/4	2.59	9/16 - 18	5/8
4-6 X41HT7*	1/4	3/8	2.83	9/16 - 18	5/8
4-8 X41HT7*	1/4	1/2	3.10	9/16 - 18	5/8
4-9 X41HT7*	1/4	9/16	3.16	9/16 - 18	5/8
4-12 X41HT7-*-Z6	1/4	3/4	3.63	9/16 - 18	13/16
6-4 X41HT7*	3/8	1/4	2.92	3/4 - 16	13/16
6-6 X41HT7*	3/8	3/8	3.16	3/4 - 16	13/16
6-8 X41HT7*	3/8	1/2	3.43	3/4 - 16	13/16
6-9 X41HT7*	3/8	9/16	3.49	3/4 - 16	13/16
9-4 X41HT7*	9/16	1/4	3.25	1-1/8 - 12	1-13/16
9-6 X41HT7*	9/16	3/8	3.49	1-1/8 - 12	1-13/16
9-8 X41HT7*	9/16	1/2	3.75	1-1/8 - 12	1-13/16
9-9 X41HT7*	9/16	9/16	3.82	1-1/8 - 12	1-13/16

* Add to the part number either **-SS** or **-2507** depending on selected material. (Example: **9-9 FX41HT7-SS**)

9/16" MPI™ size not available in 2507 Super Duplex (1/2" MPI™ size only)

Add "**-Z6**" suffix for part factory assembled with preset ferrules and nuts. **NOTE: -Z6** option is mandatory for MPI™ sizes 12 & 16

** **-IX** suffix is required when increasing rated working pressure to 20 ksi MAWP (per ASME 31.3 Chapter IX)

T7HF

MPI™ Tube Stub to Male NPT Pipe

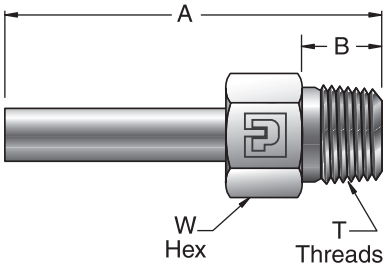

Parker Part No.	Inches						Working Pressure (PSIG)
	MPI™ Tube Stub	Male NPT End	A	B	NPT Thread	W Hex	
4-4 T7HF*	1/4	1/4	2.32	.57	1/4 - 18	5/8	15,000
4-6 T7HF*	1/4	3/8	2.44	.57	3/8 - 18	3/4	15,000
4-8 T7HF*	1/4	1/2	2.76	.76	1/2 - 14	7/8	15,000
6-4 T7HF*	3/8	1/4	2.56	.57	1/4 - 18	5/8	15,000
6-6 T7HF*	3/8	3/8	2.68	.57	3/8 - 18	3/4	15,000
6-8 T7HF*	3/8	1/2	2.99	.76	1/2 - 14	7/8	15,000
8-4 T7HF*	1/2	1/4	2.82	.57	1/4 - 18	5/8	15,000
8-6 T7HF*	1/2	3/8	2.95	.57	3/8 - 18	3/4	15,000
8-8 T7HF*	1/2	1/2	3.26	.76	1/2 - 14	7/8	15,000
9-4 T7HF-*	9/16	1/4	2.88	.57	1/4 - 18	5/8	15,000
9-6 T7HF-*	9/16	3/8	3.01	.57	3/8 - 18	3/4	15,000
9-8 T7HF-*	9/16	1/2	3.32	.76	1/2 - 14	7/8	15,000
9-12 T7HF-*	9/16	3/4	3.43	.76	3/4 - 14	1-1/8	10,000
12-8 T7HF-*-Z6	3/4	1/2	3.67	.76	1/2 - 14	7/8	15,000
12-12 T7HF-*-Z6	3/4	3/4	3.80	.76	3/4 - 14	1-1/8	10,000
16-16 T7HF-*-Z6	1	1	4.70	.95	1-11 1/2	1-3/8	10,000

***** Add to the part number either **-SS** or **-2507** depending on selected material. (Example: **9-12 T7HF-SS**)

9/16" MPI™ size not available in 2507 Super Duplex (1/2" MPI™ size only)

Add "**-Z6**" suffix for part factory assembled with preset ferrules and nuts. **NOTE: -Z6** option is mandatory for MPI™ sizes 12 & 16

-IX suffix is not an option for this style adapter

XHT7

37° Flare to MPI™ Tube Stub

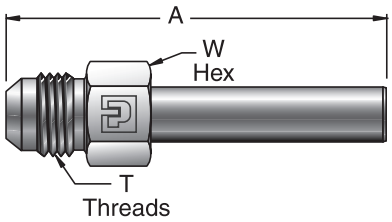

Parker Part No.	Inches					Working Pressure (PSIG)
	37° Flare Adapter Size	MPI™ Tube Stub	A	T Thread	W Hex	
4-4 XHT7*	1/4	1/4	2.24	7/16 - 20	1/2	15,000
4-6 XHT7*	1/4	3/8	2.47	7/16 - 20	1/2	15,000
6-4 XHT7*	3/8	1/4	2.37	9/16 - 18	5/8	12,500
6-6 XHT7*	3/8	3/8	2.60	9/16 - 18	5/8	12,500
6-8 XHT7*	3/8	1/2	2.87	9/16 - 18	5/8	12,500
6-9 XHT7-*	3/8	9/16	2.93	9/16 - 18	5/8	12,500
6-12 XHT7-*-Z6	3/8	3/4	2.28	9/16 - 18	13/16	12,500
8-6 XHT7*	1/2	3/8	2.77	3/4 - 16	13/16	12,500
8-8 XHT7*	1/2	1/2	3.04	3/4 - 16	13/16	12,500
8-9 XHT7-*	1/2	9/16	3.10	3/4 - 16	13/16	12,500
8-12 XHT7-*-Z6	1/2	3/4	3.38	3/4 - 16	13/16	12,500
12-8 XHT7*	3/4	1/2	3.31	1-1/16 - 12	1-1/8	12,500
12-12 XHT7-*-Z6	3/4	3/4	3.83	1-1/16 - 12	1-1/8	12,500
16-16 XHT7-*-Z6	1	1	4.79	1-5/16 - 12	1-3/8	7,200

***** Add to the part number either **-SS** or **-2507** depending on selected material. (Example: **8-9 XHT7-SS**)

9/16" MPI™ size not available in 2507 Super Duplex (1/2" MPI™ size only)

Add "**-Z6**" suffix for part factory assembled with preset ferrules and nuts. **NOTE: -Z6** option is mandatory for MPI™ sizes 12 & 16

T7HOA

MPI™ Tube Stub to Male SAE O-ring

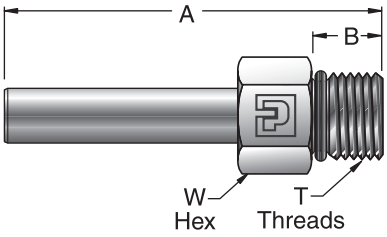

Parker Part No.	Inches						Working Pressure (PSIG)
	MPI™ Tube Stub	SAE Oring End	A	B	T Thread	W Hex	
4-4 T7HOA*	1/4	1/4	2.25	.43	7/16 - 20	9/16	12,500
4-6 T7HOA*	1/4	3/8	2.35	.47	9/16 - 18	11/16	12,500
4-8 T7HOA*	1/4	1/2	2.49	.55	3/4 - 16	7/8	12,500
6-4 T7HOA*	3/8	1/4	2.48	.43	7/16 - 20	9/16	12,500
6-6 T7HOA*	3/8	3/8	2.58	.47	9/16 - 18	11/16	12,500
6-8 T7HOA*	3/8	1/2	2.83	.55	3/4 - 16	7/8	12,500
8-4 T7HOA*	1/2	1/4	2.75	.43	7/16 - 20	9/16	12,500
8-6 T7HOA*	1/2	3/8	2.85	.47	9/16 - 18	11/16	12,500
8-8 T7HOA*	1/2	1/2	2.99	.55	3/4 - 16	7/8	12,500
9-4 T7HOA-*	9/16	1/4	2.81	.43	7/16 - 20	5/8	12,500
9-6 T7HOA-*	9/16	3/8	2.91	.47	9/16 - 18	11/16	12,500
9-8 T7HOA-*	9/16	1/2	3.05	.55	3/4 - 16	7/8	12,500
12-16 T7HOA-*-Z6	3/4	1	4.02	.73	1-5/16 - 12	1-1/2	6,600
16-16 T7HOA-*-Z6	1	1	4.61	.73	1-5/16 - 12	1-1/2	6,600
16-24 T7HOA-*-Z6	1	1-1/2	4.49	.73	1-7/8 - 12	21-1/8	6,000

* Add to the part number either **-SS** or **-2507** depending on selected material. (Example: **9-8 T7HOA-SS**)

9/16" MPI™ size not available in 2507 Super Duplex (1/2" MPI™ size only)

* * All male o-ring ends for MPI™ fittings are heavy duty and comply with SAE J1926-2. This end has maximum thread engagement for strength and requires the minimum full thread engagement specified in SAE J9126 for the female port.

Standard O-ring material is Nitrile #N0552-90.

Add "**-Z6**" suffix for part factory assembled with preset ferrules and nuts. **NOTE: -Z6** option is mandatory for MPI™ sizes 12 & 16

-IX option is not available for this style adapter

M40HT7

Type "M" High Pressure Hose Adapter to MPI™ Tube Stub

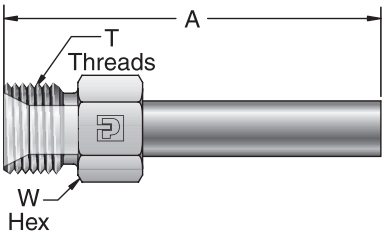

Parker Part No.	Inches				
	Hose* Adapter Size	MPI™ Tube Stub	A	T Thread	W Hex
6-4 M40HT7*	-6	1/4	2.31	9/16 - 18	5/8
6-6 M40HT7*	-6	3/8	2.55	9/16 - 18	5/8
8-6 M40HT7*	-8	3/8	2.74	3/4 - 16	13/16
8-8 M40HT7*	-8	1/2	3.06	3/4 - 16	13/16
8-9 M40HT7-*	-8	9/16	3.12	3/4 - 16	13/16
11-6 M40HT7*	-11	3/8	2.99	1 - 12	1-1/16
11-9 M40HT7-*	-11	9/16	3.31	1 - 12	1-1/16
11-12 M40HT7-*-Z6	-11	3/4	3.66	1 - 12	1-1/16
16-12 M40HT7-*-Z6	-16	3/4	3.91	1-5/16 - 12	1-3/8
16-16 M40HT7-*-Z6	-16	1	4.51	1-5/16 - 12	1-3/8

* Add to the part number either **-SS** or **-2507** depending on selected material. (Example: **11-9 M40HT7-SS**)

9/16" MPI™ size not available in 2507 Super Duplex (1/2" MPI™ size only)

Add "**-Z6**" suffix for part factory assembled with preset ferrules and nuts. **NOTE: -Z6** option is mandatory for MPI™ sizes 12 & 16

Adapts to Parker Polyflex Type "M" Swivel Hose Connection

-IX suffix is required when increasing working pressure to 20 ksi MAWP (per ASME 31.3 Chapter IX)

MP7PC

MPI™ Port Connector

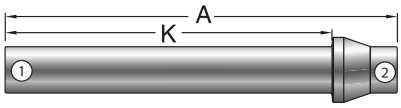

Parker Part No.	Inches			
	MPI™ Tube Stub #1	MPI™ Tube Stub #2[1]	A	K
4-4 MP7PC*	1/4	1/4	2.69	2.23
4-6 MP7PC*	1/4	3/8	2.93	2.40
6-6 MP7PC*	3/8	3/8	3.17	2.64
6-8 MP7PC*	3/8	1/2	3.43	2.68
6-9 MP7PC-*	3/8	9/16	3.50	2.75
8-8 MP7PC*	1/2	1/2	3.70	2.95
9-9 MP7PC-*	9/16	9/16	3.82	3.07
9-12 MP7PC-*	9/16	3/4	4.17	3.32
12-12 MP7PC-*-Z6	3/4	3/4	4.52	3.67
12-16 MP7PC-*-Z6	3/4	1	5.12	4.07
16-16 MP7PC-*-Z6	1	1	5.74	4.70

* Add to the part number either **-SS** or **-2507** depending on selected material. (Example: **9-12 MP7PC-SS**)

9/16" MPI™ size not available in 2507 Super Duplex (1/2" MPI™ size only)

Add "**-Z6**" suffix for part factory assembled with preset ferrules and nuts. **NOTE: -Z6** option is mandatory for MPI™ sizes 12 & 16

[1] Preset ferrules assemble 1/4 to 1/2 turn from finger tight.

-XF ferrule option required MPI sizes 12 & 16 above 10,000 psi MAWP or for any pressure 2507 Super Duplex Tubing

-IX suffix is required when increasing working pressure to 20 ksi MAWP (per ASME 31.3 Chapter IX)

X47HT7

Medium Pressure C&T Port Connector to MPI™ Tube Stub

(MP Gland sold seperately)

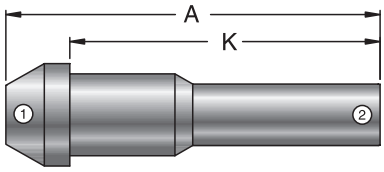

X47 Assemby Torque	Orifice (inches)
9=55 ft-lb.	.359
12=90 ft-lb.	.516
16=135 ft-lb.	.688

Parker Part No.	Inches			
	MP Port Connector #1	MPI™ Tube Stub #2	A	K
9-6 X47HT7-*	9/16	3/8	3.21	1.61
9-9 X47HT7-*	9/16	9/16	3.53	3.03
12-9 X47HT7-*	3/4	9/16	3.83	1.94
12-12 X47HT7-*-Z6	3/4	3/4	4.07	3.44
16-9 X47HT7-*	1	9/16	4.23	3.44
16-12 X47HT7-*-Z6	1	3/4	4.57	3.79
16-16 X47HT7-*-Z6	1	1	5.19	4.41

* Add to the part number either **-SS** or **-2507** depending on selected material. (Example: **16-9 X47HT7-SS**)

9/16" MPI™ size not available in 2507 Super Duplex (1/2" MPI™ size only)

End # 1 must be used with a Medium Pressure Gland (sold separately, See *Parker Autoclave Catalog*).

Add "**-Z6**" suffix for part factory assembled with preset ferrules and nuts. **Note: -Z6** option is mandatory for MPI™ sizes 12 & 16

** **-IX** suffix is required when increasing rated working pressure to 20 ksi MAWP (per ASME 31.3 Chapter IX)

NOTE: Ordering information for Medium Pressure Gland Nut (1/4" and 3/8" not applicable), see **page 37**.

PNBMP7

MPI™ Pressure Cap

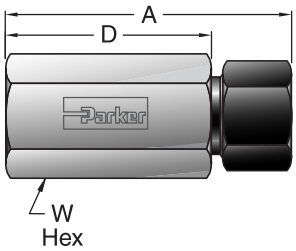

	Inches			
Parker Part No.	MPI™ Size	A	D	W Hex
4 PNBMP7*	1/4	1.69	1.19	5/8
6 PNBMP7*	3/8	2.12	1.49	3/4
8 PNBMP7*	1/2	2.62	1.93	1
9 PNBMP7*	9/16	2.75	2.00	1-1/16
12 PNBMP7*	3/4	3.53	2.64	1-3/8
16 PNBMP7*	1	4.44	3.31	1-3/4

* Add to the part number either **-SS** or **-2507** depending on selected material. (Example: **16 PNBMP7-SS**)

9/16" MPI™ size not available in 2507 Super Duplex (1/2" MPI™ size only)

-XF ferrule option required MPI sizes 12 & 16 above 10,000 psi MAWP or for any pressure 2507 Super Duplex Tubing

-IX suffix is required when increasing working pressure to 20 ksi MAWP (per ASME 31.3 Chapter IX)

FNMP7

MPI™ Plug, Assembly

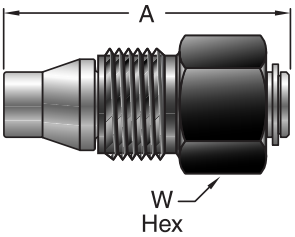

	Inches		
Parker Part No.	MPI™ Size	A	W Hex
4 FNMP7*	1/4	1.41	9/16
6 FNMP7*	3/8	1.65	11/16
8 FNMP7*	1/2	1.94	15/16
9 FNMP7*	9/16	2.00	1
12 FNMP7*	3/4	2.35	1-1/4
16 FNMP7*	1	2.96	1-1/2

* Add to the part number either **-SS** or **-2507** depending on selected material. (Example: **16 FNMP7-SS**)

9/16" MPI™ size not available in 2507 Super Duplex (1/2" MPI™ size only)

Assemble 1/4 to 1/2 turn from finger tight.

FNMP7 replaces **FNM7**

-XF ferrule option required MPI™ sizes 12 & 16 above 10,000 psi MAWP or for any pressure 2507 Super Duplex Tubing

-IX suffix is required when increasing working pressure to 20 ksi MAWP (per ASME 31.3 Chapter IX)

BMP7

MPI™ Nut

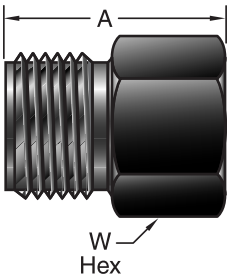

	Inches		
Parker Part No.	MPI™ Size	A	W Hex
4 BMP7*	1/4	0.81	9/16
6 BMP7*	3/8	0.92	11/16
8 BMP7*	1/2	0.97	15/16
9 BMP7*	9/16	1.03	1
12 BMP7*	3/4	1.34	1-1/4
16 BMP7*	1	1.74	1-1/2

* Add to the part number either **-SS** or **-2507** depending on selected material. (Example: **16 BMP7-SS**)
9/16" MPI™ size not available in 2507 Super Duplex (1/2" MPI™ size only)

MPFF*

MPI™ Front Ferrule

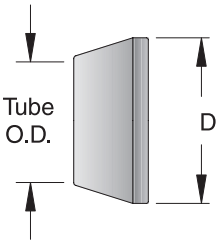

	Inches		
Parker Part No.	Tube O.D.	Ferrule Sets Per Holder *	MPFF and MPBF Ferrule O.D.
4 MPI-SS-Set	1/4	8	0.40
6 MPI-SS-Set	3/8	8	0.52
8 MPI-SS-Set	1/2	8	0.83
9 MPI-SS-Set	9/16	8	0.78
12 MPI-SS-Set	3/4	8	0.99
16 MPI-SS-Set	1	8	1.30
12 MPI-XF-Set	3/4	8	0.99
16 MPI-XF-Set	1	8	1.30

MPBF*

MPI™ Back Ferrule

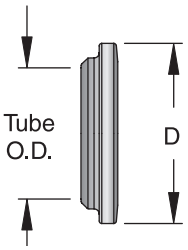

NOTE: Ferrule material does not change when used on 2507 Super Duplex Tubing.

* Ferrules are sold in sets and are shipped in Gang of 8 on a plastic holder.

9/16" MPI™ size not available in 2507 Super Duplex (1/2" MPI™ size only)

-XF ferrule option required MPI™ sizes 12 & 16 above 10,000 psi MAWP or for any pressure 2507 Super Duplex Tubing

Collar & Gland Nuts

Medium and High Pressure

C&T Tubing Size*	1/4"	3/8"	9/16"	3/4"	1"
Medium Pressure					
MP Collar	CCLX40	CCLX60	CCLX90	CCLX120	CCLX160
MP Gland Nut	CGLX40	CGLX60	CGLX90	CGLX120	CGLX160

High Pressure					
HP Collar	ACL40	ACL60	ACL90	-	-
HP Gland Nut	AGL40	AGL60	AGL90	-	-

*2507 Super Duplex option - add "**-2507**" suffix *(ex: CCLX90-2507)*

X44™ Port Machining Dimensions (Complete with Tolerancing)

The Parker X44™ Port is a 20,000 psi "OPEN SOURCE" female connection for customer use when used in materials that meet minimum requirements shown in **Note 2**). Following these machining and QC instructions will allow integration to connections such as Parker MPI™, MPA, Parker Autoclave Medium & High Pressure Cone and Thread, Parker Parflex Type M Hose Ends, High Pressure NPT, JIC (37°) and SAE Oring as required. The "QC Gauge Ball" shown in Figure 2 is a method of Quality Control to establish if the angled port is made correctly (supplied by "others"). Requires use of X44 Adapter (See pages 39-40).

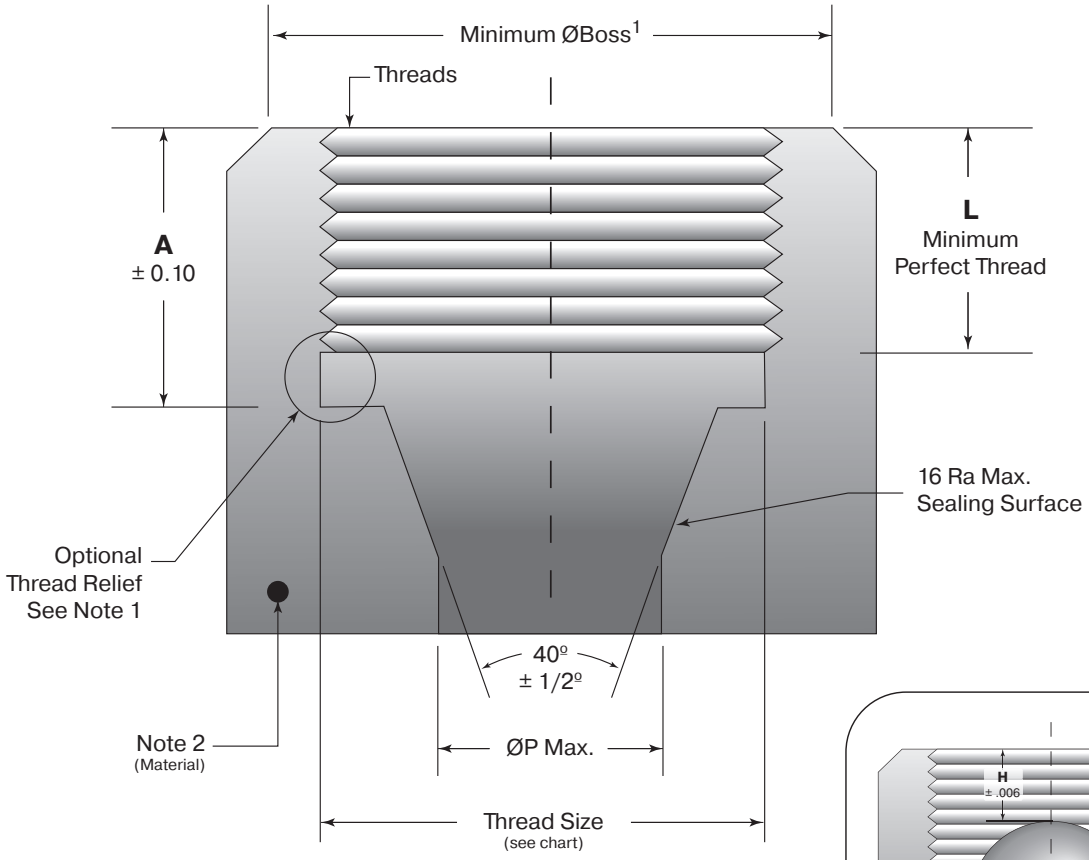

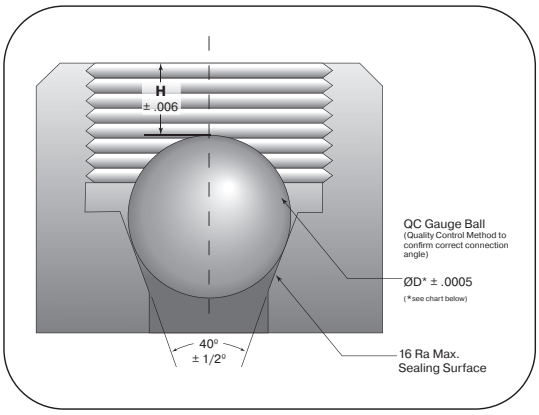

Figure 2

(Shown with QC Gauge Ball in-place)

Port Dimensions for Parker X44™ Adapter									
Size	Threads	A	ØD*	H	L	ØP Max.	Min. ØBoss	Maximum Working Pressure PSI	Assembly Torque
6	5/8-18 UNF-2B	.516	.3750	.386	.409	.291	3/4	20,000	40 ft-lb
9	7/8-14 UNF-2B	.547	.6250	.222	.435	.385	1-1/16	20,000	80 ft-lb
12	1-1/8-12 UNF-2B	.680	.7500	.324	.549	.541	1-3/8	20,000	165 ft-lb

NOTE:

1. If produced with the optional thread relief, the minimum boss diameter shall be increased by 1/16"
2. 60,000 psi minimum yield strength required for port material.
3. ØP is the maximum thru hole. Drill size should be .010" smaller than diameter shown.
4. All dimensions are in inches unless otherwise specified.

X44HBMP7

X44 Male by MPI™ Connector

Used in MPI connection port shown on page 85

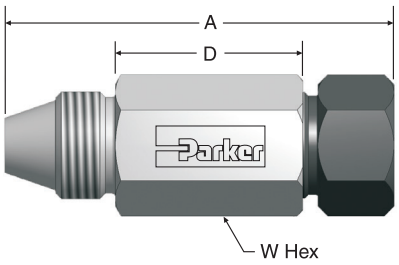

Sizes	X44 Assemby Torque
6	40 ft-lbf.
9	80 ft-lbf.
12	165 ft-lbf.

	Inches				
Parker Part No.	X44 Adapter	MPI™ Size	A	D	W Th'k
6-6 X44HBMP7*	3/8	3/8	2.47	1.06	3/4
6-9 X44HBMP7*	3/8	9/16	3.16	1.64	1-1/16
6-12 X44HBMP7*	3/8	3/4	3.84	2.19	1-3/8
9-9 X44HBMP7*	9/16	9/16	3.20	1.54	1-1/16
9-12 X44HBMP7*	9/16	3/4	3.98	2.19	1-3/8
12-9 X44HBMP7*	3/4	9/16	3.15	1.35	1-1/4
12-12 X44HBMP7*	3/4	3/4	3.89	1.96	1-3/8
12-16 X44HBMP7*	3/4	1	5.01	2.83	1-3/4

* Add to the part number either **-SS** or **-2507** depending on selected material. (Example: **12-16 X44HBMP7-SS**)

9/16" MPI™ size option not available in 2507 Super Duplex (Use 1/2" MPI™)

-XF ferrule option required MPI™ sizes 12 & 16 above 10,000 psi MAWP or for any pressure 2507 Super Duplex Tubing

**** -IX** suffix is required when increasing rated working pressure to 20 ksi MAWP (per ASME 31.3 Chapter IX)

X44HT7

X44 Male by MPI™ Tube Stub

Used in MPI connection port shown on page 85

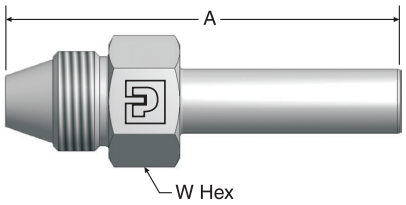

Size	X44 Assemby Torque
6	40 ft-lbf.
9	80 ft-lbf.
12	165 ft-lbf.

	Inches			
Parker Part No.	X44 Adapter	MPI™ Size	A	W Th'k
6-4 X44HT7*	3/8	1/4	2.65	11/16
6-6 X44HT7*	3/8	3/8	2.89	11/16
6-12 X44HT7-*-Z6	3/8	3/4	3.69	13/16
9-9 X44HT7-*	9/16	9/16	3.60	1
9-12 X44HT7-*-Z6	9/16	3/4	3.95	1
12-9 X44HT7-*	3/4	9/16	3.74	1-1/4
12-12 X44HT7-*-Z6	3/4	3/4	4.09	1-1/4

* Add to the part number either **-SS** or **-2507** depending on selected material. (Example: **12-9 X44HT7-SS**)

9/16" MPI™ size not available in 2507 Super Duplex (1/2" MPI™ size only)

Add "**-Z6**" suffix for part factory assembled with preset ferrules and nuts. **NOTE: -Z6** option is mandatory for MPI™ sizes 12 & 16

** **-IX** suffix is required when increasing rated working pressure to 20 ksi MAWP (per ASME 31.3 Chapter IX)

M40HX44

Type “M” Male by X44 Male

Used in MPI™ connection port shown on page 85

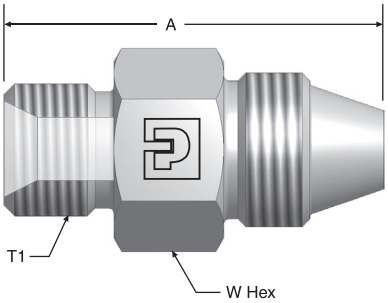

Size	X44 Assemby Torque
6	40 ft-lbf.
9	80 ft-lbf.
12	165 ft-lbf.

	Inches				
Parker Part No.	Hose* Adapter	X44 Adapter	T1 “M” Thread	A	W Th’k
6-6 M40HX44*	-6	3/8	9/16 - 18 UNF	1.77	11/16
6-9 M40HX44*	-6	9/16	9/16 - 18 UNF	1.79	1
6-12 M40HX44*	-6	3/4	9/16 - 18 UNF	2.06	1-1/4
8-9 M40HX44*	-8	9/16	3/4 - 16 UNF	1.99	1
8-12 M40HX44*	-8	3/4	3/4 - 16 UNF	2.18	1-1/4
11-9 M40HX44*	-11	9/16	1 - 12 UNF	2.04	1-1/16
11-12 M40HX44*	-11	3/4	1 - 12 UNF	2.18	1-1/4

* Add to the part number either **-SS** or **-2507** depending on selected material. (Example: **11-12 M40HX44-SS**)

9/16” MPI™ size not available in 2507 Super Duplex (1/2” MPI™ size only)

** **-IX** suffix is required when increasing rated working pressure to **20 ksi MAWP** (per ASME 31.3 Chapter IX)

Adapts to Parker Polyflex Type “M” Swivel Hose Connection

MAN Series Needle Valves with MPI™ Style Connections

Pressures to 20,000 psi (1380 bar)

Parker MAN series needle valves with MPI™ tube connections are designed for multi-turn control of liquid or gas media with flow regulation or shutoff options for pressures as high as 20,000 psi. This Double Ferrule connection delivers fast, easy make-up and reliable bubble-tight performance in either liquid or gas service. Valves are built for MPI™ tube sizes from 1/4" to 1" and include five different body patterns providing many control options.

Our Parker MAN Series valves can be used to 15,000 psi per ASME Code 31.1/31.3 Chapter 2 or up to 20,000 psi per ASME Code 31.3 Chapter IX (**-IX** suffix option). As an added valve feature, you will find two orifice sizes of 9/16" thru 1" valves that allow the user to maximize flow and actuator size for the ultimate in efficiency and value. (See model number charts and actuator section starting on page 44)

Features:

- Valve flow capabilities closely match associated tubing bore sizes
- CW 316 Stainless Steel Material is Standard, 2507 Annealed Super Duplex as option
- Metal-to-metal seating achieves bubble-tight shut-off, longer stem/seat life in abrasive flow, greater durability for repeated on/off cycles, unmatched temperature performance and excellent corrosion resistance
- Standard PTFE packing provides dependable stem and body sealing from -423˚F to 450˚F, additional options include PTFE/Glass (25%) for temperatures to 600˚F and Graphite Yarn for temperatures of 32˚ to 1000˚F (may require use of **-LT** (Low Temp) or **-HT** (High Temp) stem extensions)
- Choice of Vee (shutoff) or Flow Regulating Stem Tips
- Replaceable Seat Option available with Right Angle 2-Way body style increases valve life
- Optional N-Dura Stem and Seat Coating or Stellite material option for severe service available
- NACE (MR0175/ISO 15156) material options Available

MAN Series Needle Valve with MPI™ Connections

Parker MPI™ Connection Benefits:

MPI™ Connections are designed for both liquids and gases. They can be used on MPI™ 1/8th Hard tubing, Autoclave Engineers Medium Pressure Tubing, or Thick Wall Instrumentation Tubing in both 316 & 317 SS, 6Moly and 2507 Super Duplex materials.

- **Suparcase® Technology** creates a Corrosion Resistant Ferrule set for a strong, mechanical hold
- **Double Ferrule** design is proven but not interchangeable with standard tube fittings
- **Longer Thread Engagement** improves resistance to pressure and load on ferrules
- **Molybdenum Disulfide Coated Gland Nut** prevents galling and makes assembly easier.
- **Patented Design** - Patent US 6851839 B2

MAN Series Needle Valve Extreme Temperature Extension shown with "**-VT**" (Vent) option

(**-VT** Vent option included as STANDARD with **-IX** option)

MAN and 20MAN Series Medium Pressure Needle Valves

Standard materials with PTFE packing allow service temperatures from 0°F (-17°C) to 450°F (232°C), optional materials offer service from -423°F (-252°C) to 1000°F (538°C). Critical service design features include packing below the stem thread and the non-rotating stem design ensures longer life in rugged conditions. MPI™ valves are available in two materials, CW 316 SS and 2507 Super Duplex.

MPI™ Medium Pressure Valve Connection Designation

Valve Connection	Description	Drawing
MP7	Parker MPI™ *(Medium Pressure Inverted)* To 15,000 psi to ASME 31.3 Ch II or 20,000 psi to ASME 31.3 Ch IX (**-IX** suffix)	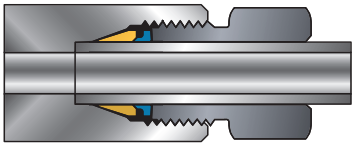

Selections "F" NPT Valves and "MF" Medium Pressure C&T Valves from previous MPI™ catalog are now supplied from the Parker Autoclave Engineers product catalogs: "P" Series and "SM" Series Needle Valve brochures.

-IX suffix used when increasing working pressure to 20,000 psi using ASME 31.3 Chapter IX design rules - use includes Vent Holes for safety.

9/16" MPI™ size not available in 2507 Super Duplex (1/2" MPI™ size only)

Material of Construction and Spare Part Identification

Item#	Description	Material
1	Low Friction Packing Gland	Ampco 45
2	Panel Mount Thread Location	See Panel Hole Chart
❸	Packing Washer	Ampco 45
❹	Bottom Washer	316 SS
5	Valve Body	316 SS
6	Pan Head Screw 10-24 x 1/4"	18-8 SS
❼	Metal to Metal Seating	316 SS
❽	Adjustable Packing	PTFE
9	One Piece Stem	316 SS
10	Locking Device	302 SS
11	Powder Coated Handle	316 SS
⓬	Stem Sleeve	304 SS
⓭	Hex Nuts	300 Series SS
⓮	Thrust Washer	17-4PH
●	Replaceable Seat (version only)	17-4PH

❶ Typical spare parts found in Repair Kit

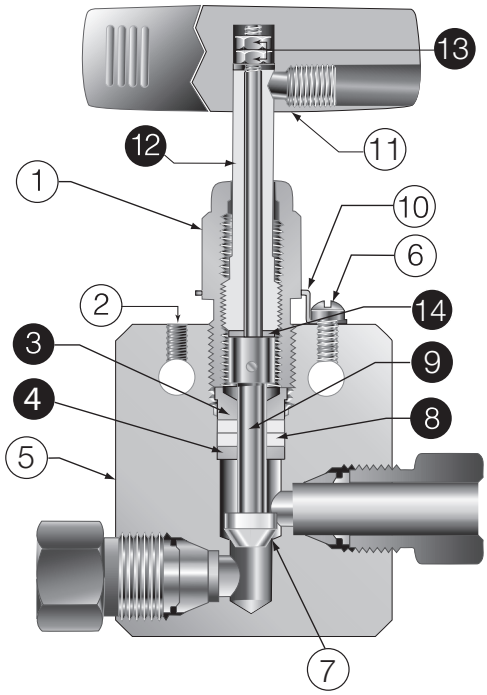

Inlet is typically under the seat (from left side in drawing above) however valve can be used bi-directionally. Inlet is shown to keep pressure trapped under seat in closed position (preferred).

Panel Hole Sizes

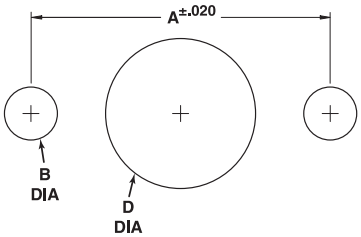

Needle Valve Panel Mount

	Inches			
Valve Size	A	B	Screw Size	D
4 & 6	1.25	.22	#10 - 24	.75
8 & 9	1.375	.22	#10 - 24	1.00
12	1.75	.22	#10 - 24	1.12
16	2.50	.22	#10 - 24	1.62

End user to supply panel mount screws as required - length dependent on panel thickness.

Two Way Inline Valves

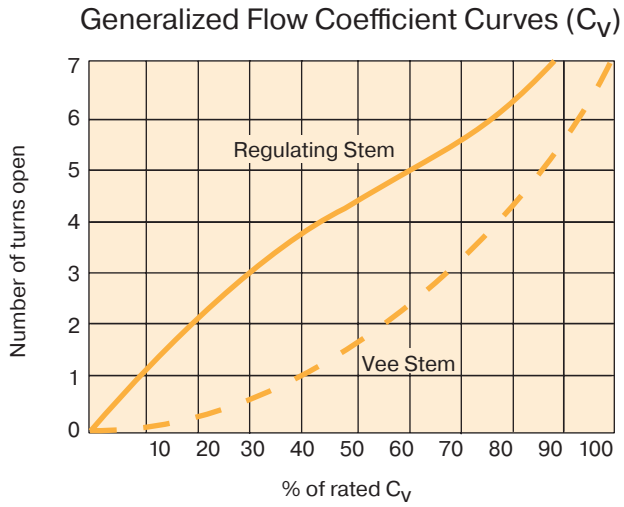

How to Order MAN Series Needle Valves

The correct part number is easily derived from the following example and ordering chart. The eight product characteristics required are coded as shown in the chart. **-IX** suffix required for working pressures over 15,000 psi (1035 bar) per ASME 31.3 Chapter IX - valve orifice may be reduced 9/16" to 1" sizes (see charts following).

The following example describes an MAN Series needle valve with 1/4" MPI™ connections, 2 way angle flow path, blunt (VEE) stem, PTFE packing, a stainless steel body and the option for cryogenic trim materials

Typical part number example: **4MP7-MANAB-T-SS-LTB** (part number is created based on customer selection of product parameters, see below for example)

4	MP7	-	MAN	A	B	-	T	-	SS	-	LTB
Inlet/Outlet Connection Size	Connection Type		Valve Series	Valve Type	Stem Type		Packing Material		Body Material		Options
4 1/4" **6** 3/8" **8** 1/2" **9** 9/16" **12** 3/4" **16** 1"	**MP7** Parker MPI™		**MAN**	**L** 2-Way Inline **A** 2-Way Angle **X***I** 3-Way, 2 Pressure Connections **X***D** 3-Way, 2 Stem Connection **A***R** 2-Way Angle (replaceable seat) **X***O** 3-Way, 1 Pressure Connection (*** Insert Stem Type)	**B** Blunt (Vee) **R** Regulating		**T** PTFE (Standard) **TG** PTFE Glass (use with **HYG** option) **GY** Graphite Yarn (use with **HT** option)		**SS** Stainless Steel ***2507** Super Duplex *9/16" MPI™ size not available in 2507 Super Duplex (1/2" MPI™ size only)		**LTB** Cryogenic (-100° to 0°F) **LT** Low Temp. Ext. (-100° to -423°F) **HT** High Temp. Ext. (800° to 1000°F) **HYG** Hydrogen/Helium Service **NC** NACE/ISO 15156 Certificate **XF** High Strength Ferrules (sizes 12 & 16 only) **IX** Pressure max of 20,000 psi (to ASME B31.3 Chapter IX) Actuators per pages 48-56

Extreme Temperature Options:

Standard valves using either PTFE (**-T**) or PTFE Glass (**-TG**) packing are capable of temperatures from 0°F to 450°/600°F, Additional Temperature range options are shown below:
(**Note:** Use code "**T**" packing with "**LTB**"and "**LT**" Cryogenic Trim options as standard.

-LTB = Standard valve with Cryogenic trim materials and PTFE packing to -100°F (-73°C)

-LT = Extended stuffing box valve with PTFE packing and Cryogenic trim materials to -423°F (-252°C)

-TG = Standard valve with PTFE-Glass packing from -423°F (-253°C) to 600°F (316°C)

-GY = Standard valve with Graphite Braided Yarn packing 32°F to 800°F (427°C). Use when selecting HT option.

(**Note:** Manual 3/4" valve rated 8000 psi (552 bar) and 1" rated 6000 psi (412 bar) max with Graphite Yarn packing)

-HT = Extended stuffing box valve with Graphite Braided Yarn packing to 1000°F (538°C)

See page 47 for **HT** and **LT** Extension dimensions and Clamshell Valve Handle Lock options.
Contact factory for NACE material and pressure effects.

-HYG = High Cycle Hydrogen/Helium Option, Includes **-LTB** option w/PTFE Glass Packing for -100° to 600°F operation (-423°F operation when adding **-LT** option)

2-Way Straight Valve *(L option)*

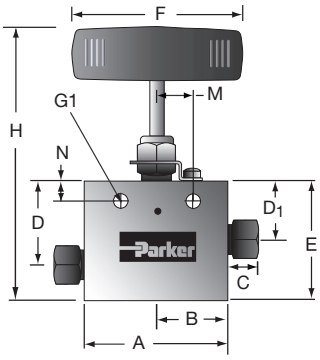

Notes:
Attention: Max Pressure selection will impact valve orifice size (except size 4 & 6)
-IX suffix is required to change rated working pressure to 20 ksi MAWP (per ASME 31.3 Chapter IX)
-XF ferrule option required MPI sizes 12&16 above 10,000 psi or any 2507 Super Duplex Tubing
Replace "**B**"(Vee Stem) in part number with "**R**" for Regulating Stem as needed
Replace **-SS** with **-2507** depending on selected material
H = Dimension with stem in closed position
Panel Mount Template and drill sizes on page 42

** = Include any original valve suffix when ordering Repair Kit
9/16" MPI™ size not available in 2507 Super Duplex (1/2" MPI™ size only)

Rated C_V 2-Way (Inline)	
Size	15 ksi/20 ksi
4MP7	0.31
6MP7	0.75
8MP7	1.75/1.30
9MP7	1.75/1.30
12MP7	2.8/2.5
16MP7	5.2/4.4

Parker Part No.	Max Pressure PSIG	Connection	Inches													Repair Kit**	
			Orifice	A	B	C	D	D1	E	F	G1	H	M	N	Block Thick.	"B" Stem	"R" Stem
4MP7-MANLB-T-SS	15K/20 ksi	1/4" MPI™	.125	2.50	1.25	0.50	1.63	1.19	2.13	3.00	0.22	4.60	0.63	0.38	1.00	R4MANB	R4MANR
6MP7-MANLB-T-SS	15K/20 ksi	3/8" MPI™	.219	2.50	1.25	0.63	1.63	1.19	2.13	3.00	0.22	4.60	0.63	0.38	1.00	R6MANB	R6MANR
8MP7-MANLB-T-SS	15,000	1/2" MPI™	.359	3.00	1.50	0.69	2.38	1.75	3.00	4.00	0.34	6.00	0.69	0.50	1.38	R8MANB	R8MANR
8MP7-MANLB-T-SS-IX	20,000	1/2" MPI™	.312	3.00	1.50	0.69	2.38	1.75	3.00	4.00	0.34	6.00	0.69	0.50	1.38	R8MANB-IX	R8MANR-IX
9MP7-MANLB-T-SS	15,000	9/16" MPI™	.359	3.00	1.50	0.75	2.38	1.75	3.00	4.00	0.34	6.00	0.69	0.50	1.38	R9MANB	R9MANR
9MP7-MANLB-T-SS-IX	20,000	9/16" MPI™	.312	3.00	1.50	0.75	2.38	1.75	3.00	4.00	0.34	6.00	0.69	0.50	1.38	R9MANB-IX	R9MANR-IX
12MP7-MANLB-T-SS	15,000	3/4" MPI™	.516	4.12	2.06	0.88	3.00	2.25	3.75	10.35	0.44	6.92	0.88	0.62	1.75	R12MANB	R12MANR
12MP7-MANLB-T-SS-IX	20,000	3/4" MPI™	.438	4.12	2.06	0.88	3.00	2.25	3.75	10.35	0.44	6.92	0.88	0.62	1.75	R12MANB-IX	R12MANR-IX
16MP7-MANLB-T-SS	15,000	1" MPI™	.688	4.75	2.38	1.13	3.75	2.81	4.75	10.35	0.56	8.74	1.25	1.13	2.00	R16MANB	R16MANR
16MP7-MANLB-T-SS-IX	20,000	1" MPI™	.562	4.75	2.38	1.13	3.75	2.81	4.75	10.35	0.56	8.74	1.25	1.13	2.00	R16MANB-IX	R16MANR-IX

2-Way Angle Valve *(A option)*

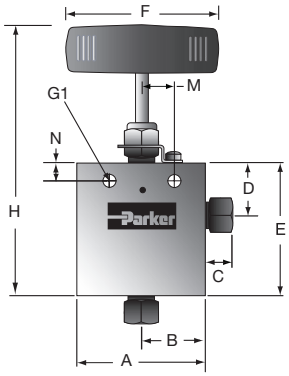

Notes:
Attention: Max Pressure selection will impact valve orifice size (except size 4 & 6)
-IX suffix is required to change rated working pressure to 20 ksi MAWP (per ASME 31.3 Chapter IX)
-XF ferrule option required MPI sizes 12&16 above 10,000 psi or any 2507 Super Duplex Tubing
Replace "**B**"(Vee Stem) in part number with "**R**" for Regulating Stem as needed
Replace **-SS** with **-2507** depending on selected material
H = Dimension with stem in closed position
Panel Mount Template and drill sizes on page 42

** = Include any original valve suffix when ordering Repair Kit
9/16" MPI™ size not available in 2507 Super Duplex (1/2" MPI™ size only)

Rated C_V 2-Way (Angle)	
Size	15 ksi/20 ksi
4MP7	0.47
6MP7	1.2
8MP7	2.6/2.0
9MP7	2.6/2.0
12MP7	4.2/3.8
16MP7	7.8/6.6

Parker Part No.	Max Pressure PSIG	Connection	Inches													Repair Kit**	
			Orifice	A	B	C	D	E	F	G1	H	M	N	Block Thick.	"B" Stem	"R" Stem	
4MP7-MANAB-T-SS	15K/20 ksi	1/4" MPI™	.125	2.50	1.25	0.50	1.19	2.57	3.00	0.22	5.00	0.63	0.38	1.00	R4MANB	R4MANR	
6MP7-MANAB-T-SS	15K/20 ksi	3/8" MPI™	.219	2.50	1.25	0.63	1.19	2.57	3.00	0.22	5.00	5.00	0.38	1.00	R6MANB	R6MANR	
8MP7-MANAB-T-SS	15,000	1/2" MPI™	.359	3.00	1.50	0.69	1.75	3.58	4.00	0.34	6.60	0.69	0.50	1.38	R8MANB	R8MANR	
8MP7-MANAB-T-SS-IX	20,000	1/2" MPI™	.312	3.00	1.50	0.69	1.75	3.58	4.00	0.34	6.60	0.69	0.50	1.38	R8MANB-IX	R8MANR-IX	
9MP7-MANAB-T-SS	15,000	9/16" MPI™	.359	3.00	1.50	0.75	1.75	3.58	4.00	0.34	6.60	0.69	0.50	1.38	R9MANB	R9MANR	
9MP7-MANAB-T-SS-IX	20,000	9/16" MPI™	.312	3.00	1.50	0.75	1.75	3.58	4.00	0.34	6.60	0.69	0.50	1.38	R9MANB-IX	R9MANR-IX	
12MP7-MANAB-T-SS	15,000	3/4" MPI™	.516	4.12	2.06	0.88	2.25	4.25	10.35	0.44	7.42	0.88	0.62	1.75	R12MANB	R12MANR	
12MP7-MANAB-T-SS-IX	20,000	3/4" MPI™	.438	4.12	2.06	0.88	2.25	4.25	10.35	0.44	7.42	0.88	0.62	1.75	R12MANB-IX	R12MANR-IX	
16MP7-MANAB-T-SS	15,000	1" MPI™	.688	4.75	2.38	1.13	2.81	5.44	10.35	0.56	9.43	1.25	1.13	2.00	R16MANB	R16MANR	
16MP7-MANAB-T-SS-IX	20,000	1" MPI™	.562	4.75	2.38	1.13	2.81	5.44	10.35	0.56	9.43	1.25	1.13	2.00	R16MANB-IX	R16MANR-IX	

3-Way/2 On-Pressure Valve *(X*I option)*

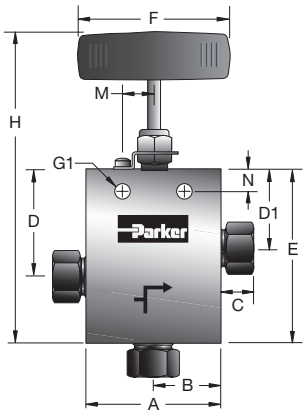

Notes:
Attention: Max Pressure selection will impact valve orifice size (except size 4 & 6)
-IX suffix is required to change rated working pressure to 20 ksi MAWP (per ASME 31.3 Chapter IX)
-XF ferrule option required MPI sizes 12&16 above 10,000 psi or any 2507 Super Duplex Tubing
Replace "**B**"(Vee Stem) in part number with "**R**" for Regulating Stem as needed
Replace **-SS** with **-2507** depending on selected material
H = Dimension with stem in closed position
Panel Mount Template and drill sizes on page 42

** = Include any original valve suffix when ordering Repair Kit
9/16" MPI™ size not available in 2507 Super Duplex (1/2" MPI™ size only)

Rated C_V 3-Way/2 on Pressure	
Size	15 ksi/20 ksi
4MP7	0.47
6MP7	1.2
8MP7	2.0
9MP7	2.6/2.0
12MP7	4.2/3.8
16MP7	7.8/6.6

Parker Part No.	Max Pressure PSIG	Connection	Inches													Repair Kit**	
			Orifice	A	B	C	D	D1	E	F	G1	H	M	N	Block Thick.	"B" Stem	"R" Stem
4MP7-MANXBI-T-SS	15K/20 ksi	1/4" MPI™	0.125	2.50	1.25	0.50	1.63	1.19	2.84	3.00	0.22	5.30	0.63	0.38	1.00	R4MANB	R4MANR
6MP7-MANXBI-T-SS	15K/20 ksi	3/8" MPI™	0.219	2.50	1.25	0.63	1.63	1.19	2.84	3.00	0.22	5.30	0.63	0.38	1.00	R6MANB	R6MANR
8MP7-MANXBI-T-SS	15,000	1/2" MPI™	0.359	3.00	1.50	0.69	2.38	1.75	3.88	4.00	0.34	6.90	0.69	0.50	1.38	R8MANB	R8MANR
8MP7-MANXBI-T-SS-IX	20,000	1/2" MPI™	0.312	3.00	1.50	0.69	2.38	1.75	3.88	4.00	0.34	6.90	0.69	0.50	1.38	R8MANB-IX	R8MANR-IX
9MP7-MANXBI-T-SS	15,000	9/16" MPI™	0.359	3.00	1.50	0.75	2.38	1.75	3.88	4.00	0.34	6.90	0.69	0.50	1.38	R9MANB	R9MANR
9MP7-MANXBI-T-SS-IX	20,000	9/16" MPI™	0.312	3.00	1.50	0.75	2.38	1.75	3.88	4.00	0.34	6.90	0.69	0.50	1.38	R9MANB-IX	R9MANR-IX
12MP7-MANXBI-T-SS	15,000	3/4" MPI™	0.516	4.12	2.06	0.88	3.00	2.25	5.00	10.35	0.44	8.17	0.88	0.62	1.75	R12MANB	R12MANR
12MP7-MANXBI-T-SS-IX	20,000	3/4" MPI™	0.438	4.12	2.06	0.88	3.00	2.25	5.00	10.35	0.44	8.17	0.88	0.62	1.75	R12MANB-IX	R12MANR-IX
16MP7-MANXBI-T-SS	15,000	1" MPI™	0.688	4.75	2.38	1.13	3.75	2.82	6.38	10.35	0.56	10.37	1.25	1.13	2.00	R16MANB	R16MANR
16MP7-MANXBI-T-SS-IX	20,000	1" MPI™	0.562	4.75	2.38	1.13	3.75	2.82	6.38	10.35	0.56	10.37	1.25	1.13	2.00	R16MANB-IX	R16MANR-IX

3-Way/1 On-Pressure Valve *(X*O option)*

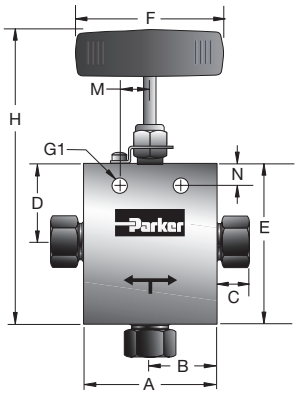

Notes:
Attention: Max Pressure selection will impact valve orifice size (except size 4 & 6)
-IX suffix is required to change rated working pressure to 20 ksi MAWP (per ASME 31.3 Chapter IX)
-XF ferrule option required MPI sizes 12&16 above 10,000 psi or any 2507 Super Duplex Tubing
Replace "**B**"(Vee Stem) in part number with "**R**" for Regulating Stem as needed
Replace **-SS** with **-2507** depending on selected material
H = Dimension with stem in closed position
Panel Mount Template and drill sizes on page 42

** = Include any original valve suffix when ordering Repair Kit
9/16" MPI™ size not available in 2507 Super Duplex (1/2" MPI™ size only)

Rated C_V 3-Way/1 on Pressure (Angle)	
Size	15 ksi/20 ksi
4MP7	0.47
6MP7	1.2
8MP7	2.6/2.0
9MP7	2.6/2.0
12MP7	4.2/3.8
16MP7	7.8/6.6

Parker Part No.	Max Pressure PSIG	Connection	Inches													Repair Kit**	
			Orifice	A	B	C	D	E	F	G1	H	M	N	Block Thick.	"B" Stem	"R" Stem
4MP7-MANXBO-T-SS	15K/20 ksi	1/4" MPI™	0.125	2.50	1.25	0.50	1.19	2.57	3.00	0.22	5.00	0.63	0.38	1.00	R4MANB	R4MANR
6MP7-MANXBO-T-SS	15K/20 ksi	3/8" MPI™	0.219	2.50	1.25	0.63	1.19	2.57	3.00	0.22	5.00	5.00	0.38	1.00	R6MANB	R6MANR
8MP7-MANXBO-T-SS	15,000	1/2" MPI™	0.359	3.00	1.50	0.69	1.75	3.63	4.00	0.34	6.60	0.69	0.50	1.38	R8MANB	R8MANR
8MP7-MANXBO-T-SS-IX	20,000	1/2" MPI™	0.312	3.00	1.50	0.69	1.75	3.63	4.00	0.34	6.60	0.69	0.50	1.38	R8MANB-IX	R8MANR-IX
9MP7-MANXBO-T-SS	15,000	9/16" MPI™	0.359	3.00	1.50	0.75	1.75	3.63	4.00	0.34	6.60	0.69	0.50	1.38	R9MANB	R9MANR
9MP7-MANXBO-T-SS-IX	20,000	9/16" MPI™	0.312	3.00	1.50	0.75	1.75	3.63	4.00	0.34	6.60	0.69	0.50	1.38	R9MANB-IX	R9MANR-IX
12MP7-MANXBO-T-SS	15,000	3/4" MPI™	0.516	4.12	2.06	0.88	2.25	4.25	10.35	0.44	7.42	0.88	0.62	1.75	R12MANB	R12MANR
12MP7-MANXBO-T-SS-IX	20,000	3/4" MPI™	0.438	4.12	2.06	0.88	2.25	4.25	10.35	0.44	7.42	0.88	0.62	1.75	R12MANB-IX	R12MANR-IX
16MP7-MANXBO-T-SS	15,000	1" MPI™	0.688	4.75	2.38	1.13	2.81	5.44	10.35	0.56	9.43	1.25	1.13	2.00	R16MANB	R16MANR
16MP7-MANXBO-T-SS-IX	20,000	1" MPI™	0.562	4.75	2.38	1.13	2.81	5.44	10.35	0.56	9.43	1.25	1.13	2.00	R16MANB-IX	R16MANR-IX

3-Way/2-Stem Valve *(X*D option)*

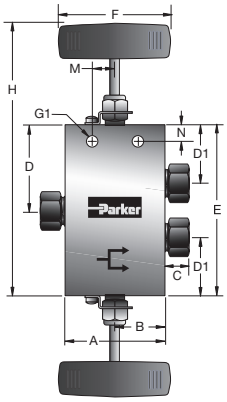

Notes:
Attention: Max Pressure selection will impact valve orifice size (except size 4 & 6)
-IX suffix is required to change rated working pressure to 20 ksi MAWP (per ASME 31.3 Chapter IX)
-XF ferrule option required MPI sizes 12&16 above 10,000 psi or any 2507 Super Duplex Tubing
Replace "**B**"(Vee Stem) in part number with "**R**" for Regulating Stem as needed
Replace **-SS** with **-2507** depending on selected material
H = Dimension with stem in closed position
Panel Mount Template and drill sizes on page 42

** = Include any original valve suffix when ordering Repair Kit
9/16" MPI™ size not available in 2507 Super Duplex (1/2" MPI™ size only)

Rated C_V 3-Way/2 Stem Manifold (Inline)	
Size	15 ksi/20 ksi
4MP7	0.31
6MP7	0.75
8MP7	1.75/1.3
9MP7	1.75/1.3
12MP7	2.8/2.5
16MP7	5.2/4.4

Parker Part No.	Max Pressure PSIG	Connection	Inches													Repair Kit**	
			Orifice	A	B	C	D	D1	E	F	G1	H	M	N	Block Thick.	"B" Stem	"R" Stem
4MP7-MANXBD-T-SS	15K/20 ksi	1/4" MPI™	0.125	2.50	1.25	0.50	1.69	1.19	3.38	3.00	0.22	5.84	0.63	0.38	1.00	R4MANXBD	R4MANXRD
6MP7-MANXBD-T-SS	15K/20 ksi	3/8" MPI™	0.219	2.50	1.25	0.63	1.69	1.19	3.38	3.00	0.22	5.84	0.63	0.38	1.00	R6MANXBD	R6MANXRD
8MP7-MANXBD-T-SS	15,000	1/2" MPI™	0.359	3.00	1.50	0.69	2.57	1.75	5.13	4.00	0.34	8.12	0.69	0.50	1.38	R8MANXBD	R8MANXRD
8MP7-MANXBD-T-SS-IX	20,000	1/2" MPI™	0.312	3.00	1.50	0.69	2.57	1.75	5.13	4.00	0.34	8.12	0.69	0.50	1.38	R8MANXBD-IX	R8MANXRD-IX
9MP7-MANXBD-T-SS	15,000	9/16" MPI™	0.359	3.00	1.50	0.75	2.57	1.75	5.13	4.00	0.34	8.12	0.69	0.50	1.38	R9MANXBD	R9MANXRD
9MP7-MANXBD-T-SS-IX	20,000	9/16" MPI™	0.312	3.00	1.50	0.75	2.57	1.75	5.13	4.00	0.34	8.12	0.69	0.50	1.38	R9MANXBD-IX	R9MANXRD-IX
12MP7-MANXBD-T-SS	15,000	3/4" MPI™	0.516	4.12	2.06	0.88	3.25	2.25	6.50	10.35	0.44	9.67	0.88	0.62	1.75	R12MANXBD	R12MANXRD
12MP7-MANXBD-T-SS-IX	20,000	3/4" MPI™	0.438	4.12	2.06	0.88	3.25	2.25	6.50	10.35	0.44	9.67	0.88	0.62	1.75	R12MANXBD-IX	R12MANXRD-IX
16MP7-MANXBD-T-SS	15,000	1" MPI™	0.688	4.75	2.38	1.13	4.13	2.81	8.25	10.35	0.56	12.24	1.25	1.13	2.00	R16MANXBD	R16MANXRD
16MP7-MANXBD-T-SS-IX	20,000	1" MPI™	0.562	4.75	2.38	1.13	4.13	2.81	8.25	10.35	0.56	12.24	1.25	1.13	2.00	R16MANXBD-IX	R16MANXRD-IX

2-Way Replaceable Seat Valves *(A*R option)*

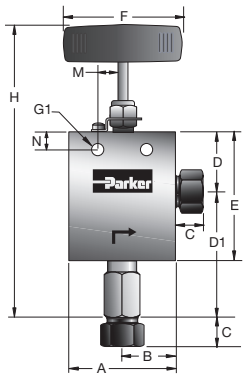

Notes:
Attention: Max Pressure selection will impact valve orifice size (except size 4 & 6)
-IX suffix is required to change rated working pressure to 20 ksi MAWP (per ASME 31.3 Chapter IX)
-XF ferrule option required MPI sizes 12&16 above 10,000 psi or any 2507 Super Duplex Tubing
Replace "**B**"(Vee Stem) in part number with "**R**" for Regulating Stem as needed
Replace **-SS** with **-2507** depending on selected material
H = Dimension with stem in closed position
Panel Mount Template and drill sizes on page 42

** = Include any original valve suffix when ordering Repair Kit
9/16" MPI™ size not available in 2507 Super Duplex (1/2" MPI™ size only)

Rated C_V 2-Way Replaceable Seat (Angle)	
Size	15 ksi/20 ksi
4MP7	0.47
6MP7	1.2
8MP7	2.6/2.0
9MP7	2.6/2.0
12MP7	4.2/3.8
16MP7	7.8/6.6

Parker Part No.	Max Pressure PSIG	Connection	Inches													Repair Kit**	
			Orifice	A	B	C	D	D1	E	F	G1	H	M	N	Block Thick.	"B" Stem	"R" Stem
4MP7-MANABR-T-SS	15K/20 ksi	1/4" MPI™	0.125	2.50	1.25	0.50	1.19	2.32	2.25	3.00	0.22	5.94	0.63	0.38	1.00	R4MANABR	R4MANABR
6MP7-MANABR-T-SS	15K/20 ksi	3/8" MPI™	0.219	2.50	1.25	0.63	1.19	2.49	2.25	3.00	0.22	6.13	0.63	0.38	1.00	R6MANABR	R6MANARR
8MP7-MANABR-T-SS	15,000	1/2" MPI™	0.359	3.00	1.50	0.69	1.63	3.18	3.12	4.00	0.34	7.80	0.69	0.50	1.38	R8MANABR	R8MANARR
8MP7-MANABR-T-SS-IX	20,000	1/2" MPI™	0.312	3.00	1.50	0.69	1.63	3.18	3.12	4.00	0.34	7.80	0.69	0.50	1.38	R8MANABR-IX	R8MANARR-IX
9MP7-MANABR-T-SS	15,000	9/16" MPI™	0.359	3.00	1.50	0.75	1.63	3.18	3.12	4.00	0.34	7.80	7.80	0.50	1.38	R9MANABR	R9MANARR
9MP7-MANABR-T-SS-IX	20,000	9/16" MPI™	0.312	3.00	1.50	0.75	1.63	3.18	3.12	4.00	0.34	7.80	7.80	0.50	1.38	RMANABR-IX	R9MANARR-IX
12MP7-MANABR-T-SS	15,000	3/4" MPI™	0.516	4.12	2.06	0.88	2.25	3.88	4.25	10.35	0.44	9.30	0.88	0.62	1.75	R12MANABR	R12MANARR
12MP7-MANABR-T-SS-IX	20,000	3/4" MPI™	0.438	4.12	2.06	0.88	2.25	3.88	4.25	10.35	0.44	9.30	0.88	0.62	1.75	R12MANABR-IX	R12MANARR-IX
16MP7-MANABR-T-SS	15,000	1" MPI™	0.688	4.75	2.38	1.13	2.69	4.94	5.25	10.35	0.56	11.62	1.25	1.13	2.00	R16MANABR	R16MANARR
16MP7-MANABR-T-SS-IX	20,000	1" MPI™	0.562	4.75	2.38	1.13	2.69	4.94	5.25	10.35	0.56	11.62	1.25	1.13	2.00	R16MANABR-IX	R16MANARR-IX

Valve Options

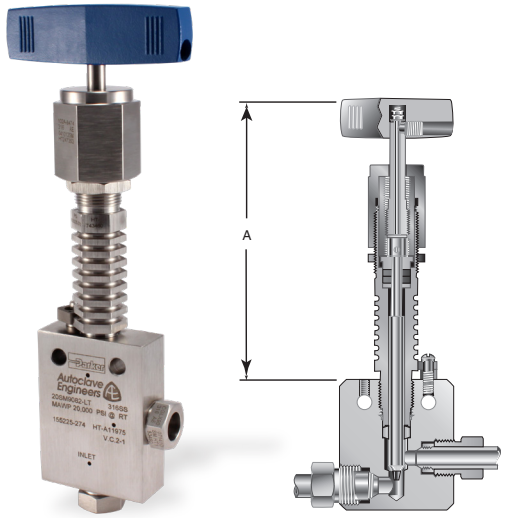

High/Low Temperature Extension:

Required in extreme temperature applications to move packing from flow stream with heatsink to moderate temperature.

-HT High Temperature over 800°F (427°C)

-LT Low Temperature under -100°F (-73°C)

Valve Series	Valve Size (inches)	Dimensions "A" inches (mm)
Standard and **-IX**	4MP7	5.50 (140)
	6MP7	5.50 (140)
	8 & 9MP7	6.31 (160)
	12MP7	6.31 (160)
	16MP7	6.31 (160)

HT option code includes Graphite (**-GY**) packing
LT option code includes 316 SS Trim material and PTFE packing

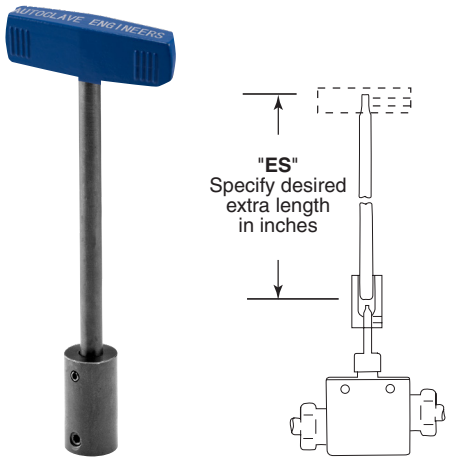

ES Stem Extender:

Stem extenders are offered for High and Low temperature operation or to extend through panel or barricade.

To order valve with Stem Extender, add **-ES** and length (6", 12", 18", 24") to beginning of valve part number e.g. ES12-8MP7-MANLB-T-SS. Other lengths to special order.

To order Stem Extender only, provide valve model prefix e.g. **ES12-6MP7**. Handle not included – use same provided with original valve.

Needle Valve, Clam Shell Handle Lockout:

(order separately using part numbers shown below, padlock not included)

Clam Shell Handle locks are provided to lockout valves in open or closed position preventing unauthorized personnel from actuating valve during shutdown or emergency situations.

This clamshell design is available in four (4) sizes dependent on handle length:

P/N AE004855 – 1" to 2.5" handle length

P/N 90088 – 2.5" to 5.0" handle length

P/N 90194 – 6.5" to 10" handle length

P/N AE004350 – 8" to 13" handle length

MAN Series Actuators: Pneumatic, Piston Style

The need to control process and vent valves from a remote location makes air operated (pneumatic) valves a vital component to many process applications.

All MAN Series needle valves with MPI™ connections are available with Fail Open (**-FO**) or Fail Closed (**-FC**) Piston Type Actuators. Four sizes of air actuators (Medium, Heavy, Extra Heavy-Single Stage, and Extra Heavy-Two Stage) are offered to meet the service requirements of Parker MAN Series Needle Valves. Both Fail Closed (normally closed) and Fail Open (normally open) designs have overlapping piston sizes to help meet efficiency or economical requirements.

Actuators are available for Outdoor Service. These operators provide corrosion resistant components and prevent the ingress of outside elements and moisture. Limit Switch position location is available upon request in either Weatherproof or Explosionproof versions.

Features and Benefits

- Fail Open or Fail Close with spring return or Dual Acting (air controls both directions)
- Piston actuator sizing incorporates maximum allowable air pressure of 100 psi
- Yoke design for separation of process and air controls
- Stem Position Indicator is standard
- Anodized Aluminum Housing (for corrosion and wear resistance)
- -20°F (-29°C) to 200°F (93°C) ambient temperature range (for operation below 30°F (-1°C) dry air must be used and heat tracing is recommended)
- Remote position electrical options available (**-LS** Weatherproof or **-LSX** Explosionproof)
- Actuation times are typically 1 second or less (subject to air pressure) and size of solenoid valve orifice (supplied by others)

Fail Open - C1S Actuator shown

Remote On-Off

Parker MAN series air-operated needle valves (**FC** – Fail Close or **FO**-Fail Open) can be controlled by a 3-Way manual air valve or by a low pressure solenoid valve (supplied by others). These can be actuated manually or remotely depending on application requirements.

Fail Safe control of the actuators is possible through the use of 3-Way manual or solenoid operated valve (supplied by others) placed in the pneumatic control line to either Fail Open or Fail Closed actuator.

Remote operation increases personnel safety by eliminating the requirement to move adjacent to High Pressure Piping.

NOTE:
Depending on selection of actuator, some applications will require pressure on valve to assist in opening against actuator springs (Fail Closed version).

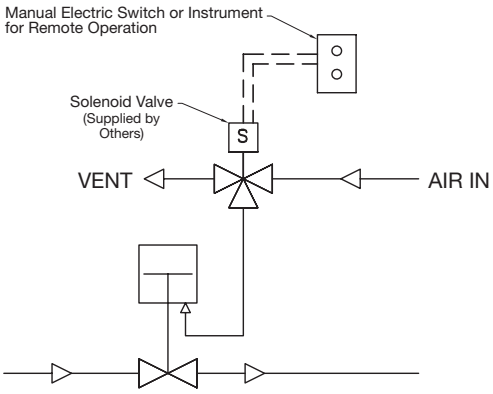

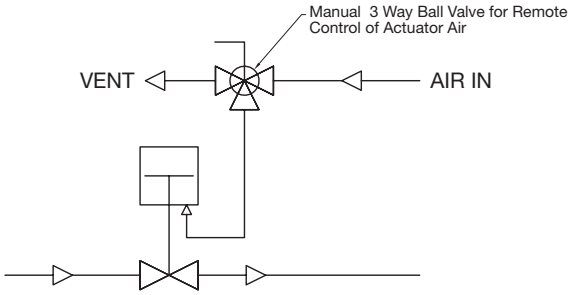

MAN Series Actuators: Piston Style Actuators

Piston type air-operated valves offer a unique, reliable design providing for a long and dependable life. These valves are more robust than diaphragm valves and are appropriate for applications such as high-flow gas and liquid delivery systems to pressure vessels

Features and Benefits

- Fail-Open or Fail-Close with spring return
- Yoke design for separation of process and air pressure
- Ease of stem replacement
- Stem position indicator is standard
- Out Door Option includes extra sealing and weather resistance materials
- 1/8" NPT air inlet connection standard except (Extra Heavy Duty has 3/8" NPT)

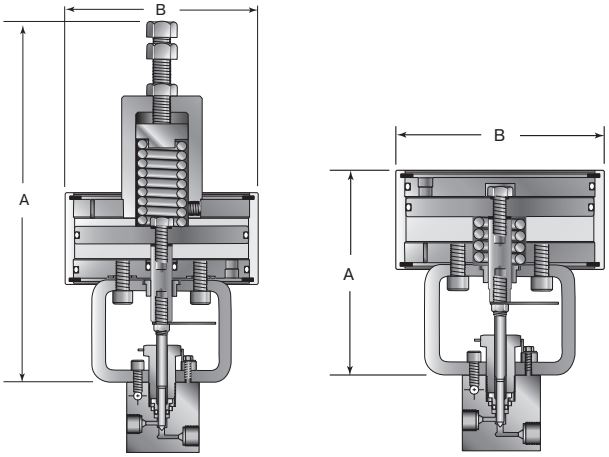

Fail Close

Fail Open

Air Operated Materials

Cylinder, Piston, Cover Plates, Spring Housing:
Anodized aluminum (for corrosion and wear resistance).

Yoke: Painted Steel

Technical Data - Air Operator

- Maximum allowable working pressure: 100 psi (6.89 bar)
- Allowable piston temperature range: -20°F to 200°F (-29°C to 93°C), Low Temp (**-LE**) option to -50°F (-45°C), with dry air only (heat trace may be needed for lower temperatures).
- Area of piston:
  Medium duty - 19.6 sq. in (126.5 sq. cm)
  Heavy duty - 39.2 sq. in (252.9 sq. cm)
  Extra Heavy duty single stage - 56 sq. in (361.3 sq. cm)
  Extra Heavy duty double stage - 112 sq. in (832.6 sq. cm)
- Approximate air usage/cycle @ 100 psi (6.89 bar):
  Medium duty - .04 SCF (.0011 SCM)
  Heavy duty - .08 SCF (.0022 SCM)
  Extra Heavy duty single stage - .33 SCF (.0095 SCM)
  Extra Heavy duty double stage - .67 SCF (.019 SCM)
- Life Cycle Tested to 100,000 cycles at 100 psi (6.89 bar) with no leakage or signs of wear or fatigue.

Limit Switch Options:

- Mechanical Weather-proof = **-LS** suffix
  Nema 4/IP66
- Proximity type Explosion-proof = **-LSX** suffix
  UL/CUL Cls 1, Div 1 Grps A-D
  Ex db IIC T6 Gb/IECEx BAS 08.0122X

NOTE: Fail Close = Air-to-Open, Fail Open = Air-to-Close

NOTE:
Air inlet for Fail Close operation is located in the back on valve stem centerline. For other locations, consult factory. Holes supplied in yoke bracket for mounting (see page 54).

Actuator Order Suffix				
Duty Rating	Type	Ordering Suffix	Dimensions: Inches/mm	
			A	B
Medium	Fail Close	O1S	10.65 (271)	5.7 (144)
	Fail Open	C1S	5.5 (139)	5.7 (144)
Heavy	Fail Close	O2S	14.25 (362)	5.7 (144)
	Fail Open	C2S	7.5 (190)	5.7 (144)
Extra Heavy Single Stage	Fail Close	HO1S	20.16 (512)	9.4 (240)
	Fail Open	HC1S	8.6 (218)	9.4 (240)
Extra Heavy Two Stage	Fail Close	HO2S	23.50 (597)	9.4 (240)
	Fail Open	HC2S	12.0 (303)	9.4 (240)

Outdoor Service Actuators		
Duty Rating	Type	Ordering Suffix
Medium	Fail Close	O1SOD
	Fail Open	C1SOD
Heavy	Fail Close	O2SOD
	Fail Open	C2SOD
Extra Heavy Single Stage	Fail Close	HO1SOD
	Fail Open	HC1SOD
Extra Heavy Two Stage	Fail Close	HO2SOD
	Fail Open	HC2SOD

How to Select a Fail Open *(Air-to-Close)* and Fail Closed *(Air-to-Open)* Actuator for MAN Series Needle Valves

Fail Open *(Air-to-Close)* Actuators

Application Condition Example:

Valve Model/Connection Size: 9MP7 Straight Vee Stem Needle Valve

Indoor or Outdoor Service: Outdoor Service

Maximum Operating Pressure: Fluid - 12,000 psi

Maximum Available Air Pressure: 60 psi

Select Actuator Type (Fail Open or Fail Close): Fail Open Type

Example: Using chart on page 51 (Fail Open Actuators), select **9MP7** Section

Across top of chart, select 12 System Pressure (12,000 psi max system pressure).

Go down that column to 9MP7 Section to first row filled with number (air pressure). First row with number is 60 – as your available air pressure is 60 psi, you do not have to go any further (if this number was higher than 60, continue to next row)

This row (Heavy Duty Actuator) confirms that this actuator needs 60 psi to close the 9MP7 valve at 12,000 psi and you have 60 psi available.

Go to **Ordering Suffix Charts** on page 49 – find “Heavy" Duty Rating – "Fail Open". Select Suffix code = -C2SOD (OD = Outdoor) and add to Needle Valve Model Number.

Example: 9MP7-MANLB-T-SS-C2SOD

Fail Close *(Air-to-Open)* Actuators *(starting next page)*:

Application Condition Example:

Valve Model/Connection Size: 9MP7 Angle Straight Vee Stem Needle Valve

Indoor or Outdoor Service: Indoor Service

Maximum Operating Pressure: Fluid - 12,000 psi

Maximum Available Air Pressure: 60 psi

Select Actuator Type (Fail Open or Fail Close): Fail Closed Type

Example: Using chart on page 52 (Fail Closed Actuators), select 9MP7 Section

Across top of chart, select 12 System Pressure (12,000 psi max system pressure).

Go down that column to 9MP7 Section to first row filled with number (air pressure). First row with number is 80 – as your available air pressure is 60 psi, you have to go further. Next Actuator (Extra Heavy Duty Single Stage) HO1S needs 70 psi to close at this pressure. This doesn't work either, final choice is H02S actuator that requires 45 psi to close.

Go to Ordering Suffix Charts on page 49 – find “Extra Heavy Two Stage" Duty Rating – "Fail Closed". Select Suffix code = -HO2SOD (OD = Outdoor) and add to Needle Valve Model Number.

Example: 9MP7-MANAB-T-SS-HO2S

CAUTION: While testing has shown O-rings to provide satisfactory service life, both cyclic and shelf life may vary widely with differing service conditions, properties of reactants, pressure and temperature cycling and age of the O-ring, **FREQUENT INSPECTIONS SHOULD BE MADE** to detect any deterioration, and O-rings replaced as required.

All dimensions for reference only and subject to change. For prompt service, Parker Autoclave Engineers stocks select products. Consult your local representative.

Actuator Selection:

Fail Open Type MAN Series Valves

15,000 psi and 20,000 psi Maximum Operating Pressure *(Air-to-Close)*

Valve Series	Operator Duty Rating Suffix for Part Number	System Pressure KSI (bar)									Maximum Pressure psi (bar)*	Stem Travel (mm)	Flow Coefficient**
		4 (280)	6 (410)	8 (550)	10 (690)	12 (830)	14 (970)	16 (1100)	18 (1240)	20 (1380)			
4MP7 - 15 ksi 4MP7 - 20 ksi (-IX)	Medium Duty **-C1S**	40 (3)	40 (3)	40 (3)	50 (3)	60 (4)	70 (5)	80 (6)	85 (6)	90 (7)	20,000 (1380)	.25 (6)	0.31
	Heavy Duty **-C2S**	20 (1)	20 (1)	20 (1)	25 (2)	30 (2)	35 (2)	40 (3)	45 (3)	50 (3)	20,000 (1380)		
6MP7 - 15 ksi 6MP7 - 20 ksi (-IX)	Medium Duty **-C1S**	45 (3)	45 (3)	45 (3)	55 (4)	65 (4)	75 (5)	85 (6)	95 (7)	100 (7)	19,000 (1310)	.25 (6)	0.75
	Heavy Duty **-C2S**	25 (2)	25 (2)	25 (2)	30 (2)	35 (2)	40 (3)	45 (3)	50 (3)	55 (4)	20,000 (1380)		
8MP7 - 15 ksi 9MP7 - 15 ksi	Medium Duty **-C1S**	65 (4)	75 (5)	100 (7)							8,600 (593)	.38 (10)	1.75
	Heavy Duty **-C2S**	35 (2)	40 (3)	50 (3)	55 (4)	60 (4)	70 (5)	75 (5.2)			15,000 (1035)		
	Extra Heavy Duty Single Stage **-HC1S**	30 (2)	30 (2)	35 (2)	45 (3)	50 (3.5)	55 (3.8)	60 (4.2)			15,000 (1035)		
8MP7 - 20 ksi (-IX) 9MP7 - 20 ksi (-IX)	Medium Duty **-C1S**	60 (4)	65 (4)	80 (6)	100 (7)						10,700 (738)	.38 (10)	1.30
	Heavy Duty **-C2S**	30 (2)	30 (2)	40 (3)	50 (3)	55 (4)	60 (4)	70 (5)	80 (6)	85 (6)	20,000 (1380)		
	Extra Heavy Duty Single Stage **-HC1S**	25 (2)	25 (2)	30 (2)	35 (2)	45 (3)	50 (3)	55 (4)	60 (4)	65 (4)	20,000 (1380)		
12MP7 - 15 ksi	Heavy Duty **-C2S**	45 (3)	60 (4)	80 (6)	100 (7)						10,000 (690)	.44 (11)	2.80
	Extra Heavy Duty Single Stage **-HC1S**	35 (2)	50 (3)	60 (4)	70 (5)	80 (5.5)	95 (6.5)	100 (6.9)			15,000 (1035)		
	Extra Heavy Duty Two Stage **-HC2S**	20 (1)	25 (2)	30 (2)	35 (2)	40 (2.8)	45 (3.1)	50 (3.5)			15,000 (1035)		
12MP7 - 20 ksi (-IX)	Heavy Duty **-C2S**	40 (3)	50 (3)	60 (4)	75 (5)	90 (6)	100 (7)				13,600 (938)	.44 (11)	2.50
	Extra Heavy Duty Single Stage **-HC1S**	30 (2)	40 (3)	50 (3)	60 (4)	65 (4)	75 (5)	85 (6)	95 (7)	100 (7)	19,000 (1310)		
	Extra Heavy Duty Two Stage **-HC2S**	15 (1)	20 (1)	25 (2)	30 (2)	35 (2)	40 (3)	45 (3)	50 (3)	50 (3)	20,000 (1380)		
16MP7 - 15 ksi	Extra Heavy Duty Single Stage **-HC1S**	50 (3)	70 (5)	95 (7)							8,500 (586)	.56 (14)	5.20
	Extra Heavy Duty Two Stage **-HC2S**	25 (2)	35 (2)	45 (3)	55 (4)	65 (4.5)					12,500 (860)		
16MP7 - 20 ksi (-IX)	Heavy Duty **-C2S**	50 (3)	70 (5)	100 (7)							8,800 (607)	.56 (14)	3.40
	Extra Heavy Duty, Single Stage **-HC1S**	40 (3)	55 (4)	70 (5)	85 (6)	100 (7)					12,500 (860)		
	Extra Heavy Duty, Two Stage **-HC2S**	20 (1)	25 (2)	35 (2)	40 (3)	50 (3)	55 (4)	60 (4)	70 (5)	75 (5)	20,000 (1380)		

* Maximum pressure rating is based on the lowest rating of any components. Actual working pressure may be determined by tubing pressure rating, if lower.

** C_V data is for 2-way straight valves. For angle pattern add approximately 50% to the C_V value.

Actuator Selection:
Fail Close Type MAN Series Valves
15,000 psi Maximum Operating Pressure *(Air-to-Open)*

NOTE:
Actuators are split into two groups: 15,000 psi max. and 20,000 psi max. Please make sure you are using correct pressure group.

Valve Series	Operator Duty Rating Suffix for Part Number		System Pressure KSI (bar)							Maximum Pressure psi (bar)*	Flow Coefficient**
			1 to 4 (280)	6 (410)	8 (550)	10 (690)	12 (830)	14 (970)	15 (1035)		
4MP7 - 15 ksi	Medium Duty -O1S	Air Pressure psi (bar)	65 (4)	65 (4)	65 (4)	75 (5)	85 (6)	95 (7)	95 (7)	15,000 (1035)	0.31 to .22***
		Spring Compression in (mm)	.19 (5)	.19 (5)	.19 (5)	.25 (6)	.31 (8)	.38 (10)	.44 (11)		
		Stem Travel (mm)	.25 (6)	.25 (6)	.25 (6)	.25 (6)	.25 (6)	.25 (6)	.19 (5)		
	Heavy Duty -O2S	Air Pressure psi (bar)	35 (3)	35 (3)	35 (3)	40 (3)	45 (3)	50 (3)	50 (3)		
6MP7 - 15 ksi	Medium Duty -O1S	Air Pressure psi (bar)	65 (4)	65 (4)	75 (5)	85 (6)	95 (7)	95 (7)	95 (7)	15,000 (1035)	0.75 to .57***
		Spring Compression in (mm)	.19 (5)	.19 (5)	.25 (6)	.31 (8)	.38 (10)	.44 (11)	.50 (13)		
		Stem Travel (mm)	.25 (6)	.25 (6)	.25 (6)	.25 (6)	.25 (6)	.19 (5)	.12 (3)		
	Heavy Duty -O2S	Air Pressure psi (bar)	35 (2)	35 (2)	40 (3)	45 (3)	50 (3)	50 (3)	50 (3)		
8MP7 - 15 ksi 9MP7 - 15 ksi	Heavy Duty -O2S	Air Pressure psi (bar)	60 (4)	65 (4)	75 (5)	80 (5.5)	80 (5.5)			12,000 (830)	1.74 to .83***
		Spring Compression in (mm)	.22 (6)	.28 (7)	.35 (9)	.44 (11)	.53 (13)				
		Stem Travel (mm)	.25 (6)	.25 (6)	.25 (6)	.19 (5)	.10 (3)				
	Extra Heavy Duty Single Stage -HO1S	Air Pressure psi (bar)	45 (4)	50 (3.5)	55 (4)	65 (4.5)	70 (5)	75 (5)	80 (5.5)	15,000 (1035)	1.75
		Spring Compression in (mm)	.31 (8)	.35 (9)	.47 (12)	.59 (15)	.70 (18)	80 (25)	88 (22.5)		
		Stem Travel (mm)	.38 (10)	.38 (10)	.38 (10)	.38 (10)	.38 (10)	.38 (10)	.38 (10)		
12MP7 - 15 ksi	Extra Heavy Duty Single Stage -HO1S	Air Pressure psi (bar)	55 (4)	65 (5)	80 (6)	95 (7)	100 (7)			12,000 (830)	2.80
		Spring Compression in (mm)	.44 (11)	.63 (16)	.84 (21)	1.06 (27)	1.25 (32)				
		Stem Travel (mm)	.44 (11)	.44 (11)	.44 (11)	.44 (11)	.32 (8)				
	Extra Heavy Duty Two Stage -HO2S	Air Pressure psi (bar)	40 (3)	50 (4)	55 (4)	60 (4)	70 (5)	75 (5)	75 (5)	15,000 (1035)	2.80
		Spring Compression in (mm)	.22 (6)	.31 (8)	.44 (11)	.63 (16)	.63 (16)	.74 (19)	.80 (20)		
		Stem Travel (mm)	.44 (11)	.44 (11)	.44 (11)	.44 (11)	.44 (11)	.44 (11)	.40 (10)		
16MP7 - 15 ksi	Extra Heavy Duty Two Stage -HO2S	Air Pressure psi (bar)	55 (4)	65 (4)	75 (5)	85 (6)				10,000 (689) (Spring is Fully Compressed)	5.20
		Spring Compression in (mm)	.34 (9)	.53 (13)	.69 (18)	.88 (22)					
		Stem Travel (mm)	.50 (13)	.50 (13)	.50 (13)	.50 (13)					

* Maximum pressure rating is based on the lowest rating of any components. Actual working pressure may be determined by tubing pressure rating, if lower.

** C_V data is for 2-way straight valves. For angle pattern add approximately 50% to the C_V value.

*** C_V varies because of spring compression limitations. The flow coefficient range is given for the maximum stem travel (lowest system pressure) to minimum travel (highest system pressure).

CAUTION: While testing has shown O-rings to provide satisfactory service life, both cyclic and shelf life may vary widely with differing service conditions, properties of reactants, pressure and temperature cycling and age of the O-ring, FREQUENT INSPECTIONS SHOULD BE MADE to detect any deterioration, and O-rings replaced as required. All dimensions for reference only and subject to change. For prompt service, Parker Autoclave Engineers stocks select products. Consult your local representative.

Actuator Selection:

Fail Close Type MAN Series Valves *(-IX Option Only)*

20,000 psi Maximum Operating Pressure *(Air-to-Open)*

NOTE:
Actuators are split into two groups: 15,000 psi max. and 20,000 psi max. Please make sure you are using correct pressure group.

Valve Series	Operator Duty Rating Suffix for Part Number		System Pressure KSI (bar)									Maximum Pressure psi (bar)*	Flow Coefficient**
			1-4 (280)	6 (410)	8 (550)	10 (690)	12 (830)	14 (970)	16 (1100)	18 (1240)	20 (1380)		
4MP7 20 ksi (-IX)	Medium Duty -O1S	Air Pressure psi (bar)	65 (4)	65 (4)	65 (4)	75 (5)	85 (6)	95 (7)	95 (7)	95 (7)	95 (7)	20,000 (1380)	.31 to .22***
		Spring Pre-Compression in (mm)	.19 (5)	.19 (5)	.19 (5)	.25 (6)	.31 (8)	.38 (10)	.44 (11)	.50 (13)	.56 (14)		
		Stem travel in (mm)	.25 (6)	.25 (6)	.25 (6)	.25 (6)	.25 (6)	.25 (6)	.19 (5)	.12 (3)	.06 (2)		
	Heavy Duty -O2S	Air Pressure psi (bar)	35 (3)	35 (3)	35 (3)	40 (3)	45 (3)	50 (3)	50 (3)	50 (3	50 (3		
6MP7 20 ksi (-IX)	Medium Duty -O1S	Air Pressure psi (bar)	65 (4)	65 (4)	75 (5)	85 (6)	95 (7)	95 (7)	95 (7)	95 (7)		18,250 (1258) (Spring is fully compressed)	.75 to .57***
		Spring Pre-Compression in (mm)	.19 (5)	.19 (5)	.25 (6)	.31 (8)	.38 (10)	.44 (11)	.50 (13)	.56 (14)			
		Stem travel in (mm)	.25 (6)	.25 (6)	.25 (6)	.25 (6)	.25 (6)	.19 (5)	.12 (3)	.06 (2)			
	Heavy Duty -O2S	Air Pressure psi (bar)	35 (2)	35 (2)	40 (3)	45 (3)	50 (3)	50 (3)	50 (3)	50 (3)			
8MP7 20 ksi (-IX)	Medium Duty -O1S	Air Pressure psi (bar)	85 (6)	90 (6)	95 (7)	95 (7)						9,800 (676) (Spring is fully compressed)	1.29 to .53***
		Spring Pre-Compression in (mm)	.31 (8)	.34 (9)	.47 (12)	.56 (14)							
		Stem travel in (mm)	.25 (6)	.25 (6)	.15 (4)	.06 (2)							
	Heavy Duty -O2S	Air Pressure psi (bar)	50 (6)	55 (4)	65 (4)	70 (5)	75 (5)	75 (5)	75 (5)			15,700 (1082) (Spring is fully compressed)	1.29 to .53***
		Spring Pre-Compression in (mm)	.19 (5)	.22 (6)	.28 (7)	.34 (9)	.44 (11)	.50 (13)	.56 (14)				
		Stem travel in (mm)	.25 (6)	.25 (6)	.25 (6)	.25 (6)	.19 (5)	.12 (3)	.06 (2)				
9MP7 20 ksi (-IX)	Extra Heavy Duty Single Stage -HO1S	Air Pressure psi (bar)	40 (3)	40 (3)	50 (3)	55 (4)	60 (4)	65 (4)	70 (5)	75 (5)	85 (6)	20,000 (1379)	1.30
		Spring Pre-Compression in (mm)	.25 (6)	.28 (7)	.38 (10)	.47 (12)	.56 (14)	.66 (17)	.75 (19)	.84 (21)	.94 (24)		
		Stem travel in (mm)	.38 (10)	.38 (10)	.38 (10)	.38 (10)	.38 (10)	.38 (10)	.38 (10)	.38 (10)	.38 (10)		
	Extra Heavy Duty Two Stage -HO2S	Air Pressure psi (bar)	30 (2)	35 (2)	35 (2)	40 (3)	40 (3)	45 (3)	50 (3)	50 (3)	55 (4)	20,000 (1379)	1.30
		Spring Pre-Compression in (mm)	.13 (3)	.16 (4)	.19 (5)	.25 (6)	.28 (7)	.34 (9)	.38 (10)	.44 (11)	.47 (12)		
		Stem travel in (mm)	.38 (10)	.38 (10)	.38 (10)	.38 (10)	.38 (10)	.38 (10)	.38 (10)	.38 (10)	.38 (10)		
12MP7 20 ksi (-IX)	Heavy Duty -O2S	Air Pressure psi (bar)	65 (4)	75 (5)								6,000 (414) (Spring is fully compressed)	.80 to .78***
		Spring Pre-Compression in (mm)	.28 (7)	.38 (10)									
		Stem travel in (mm)	.25 (6)	.25 (6)									
	Extra Heavy Duty Single Stage -HO1S	Air Pressure psi (bar)	50 (3)	60 (4)	70 (5)	80 (6)	90 (6)	100 (7)	100 (7)			15,000 (1034) (Spring is fully compressed)	2.50
		Spring Pre-Compression in (mm)	.38 (10)	.50 (13)	.66 (17)	.81 (21)	.97 (25)	1.13 (29)	1.22 (31)				
		Stem travel in (mm)	.44 (11)	.44 (11)	.44 (11	.44 (11	.44 (11	.44 (11	.44 (11	.06 (2)			
	Extra Heavy Duty Two Stage -HO2S	Air Pressure psi (bar)	40 (3)	45 (3)	50 (3)	55 (4)	60 (4)	65 (5)	70 (5)	75 (5)	80 (6)	20,000 (1379)	2.50
		Spring Pre-Compression in (mm)	.19 (5)	.25 (6)	.31 (8)	.41 (10)	.50 (13)	.56 (14)	.66 (17)	.83 (18)	.81 (21)		
		Stem travel in (mm)	.44 (11)	.44 (11)	.44 (11)	.44 (11)	.44 (11)	.44 (11)	.44 (11)	.44 (11)	.44 (11)		
16MP7 20 ksi (-IX)	Extra Heavy Duty Single Stage -HO1S	Air Pressure psi (bar)	65 (4)	80 (6)	95 (7)	100 (7)						15,000 (1034) (Spring is fully compressed)	2.50
		Spring Pre-Compression in (mm)	.50 (13)	.75 (19)	.97 (25)	1.22 (31)							
		Stem travel in (mm)	.50 (13)	.50 (13)	.50 (13)	.50 (13)							
	Extra Heavy Duty Two Stage -HO2S	Air Pressure psi (bar)	50 (3)	55 (4)	65 (4)	70 (5)	80 (6)	85 (6)	90 (6)	100 (7)	100 (7)	20,000 (1379)	2.50
		Spring Pre-Compression in (mm)	.25 (6)	.38 (10)	.50 (13)	.63 (16)	.75 (19)	.84 (21)	.97 (25)	1.09 (28)	1.22 (31)		
		Stem travel in (mm)	.50 (13)	.50 (13)	.50 (13)	.50 (13)	.50 (13)	.50 (13)	.50 (13)	.50 (13)	.50 (13)		

* Maximum pressure rating is based on the lowest rating of any components. Actual working pressure may be determined by tubing pressure rating, if lower.

** C_V data is for 2-way straight valves. For angle pattern add approximately 50% to the C_V value.

*** C_V varies because of spring compression limitations. The flow coefficient range is given for the maximum stem travel (lowest system pressure) to minimum travel (highest system pressure).

For **CAUTION** statements please see previous page.

Actuator: Yoke Mounting Dimensions

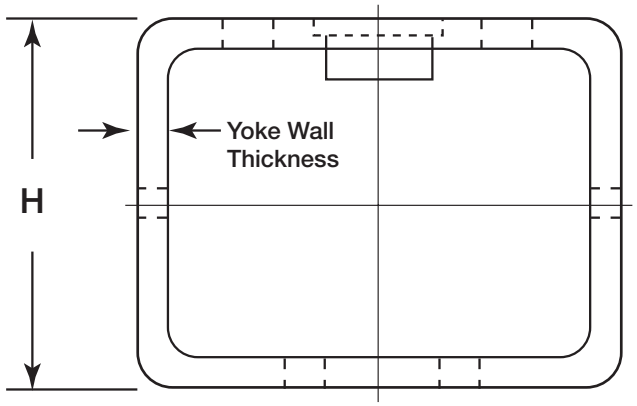

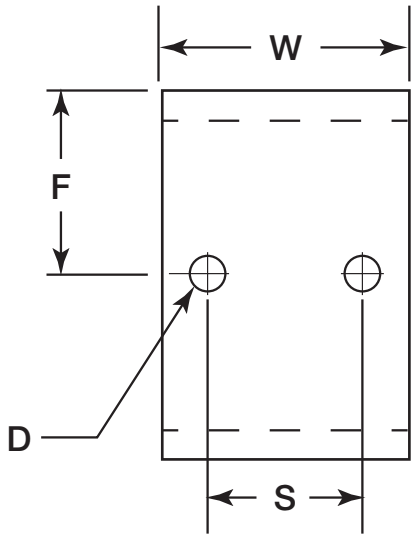

Actuator Group	System Pressure KSI (bar)					
O1S, C1S, O2S, C2S	D (Diameter)	H	W	F	S	Yoke Wall Thickness
4MP7-9MP7	.281 (7.1)	3.0 (76)	2.0 (51)	1.50 (38)	1.125 (29)	3/8"
12MP7-12MP7-IX	.281 (7.1)	4.0 (102)	2.13 (54)	1.50 (38)	1.125 (29)	3/8"
16MP7-IX (C2S Only)	.281 (7.1)	4.0 (102)	2.13 (54)	1.50 (38)	1.125 (29)	3/8"

HO1S, HC1S, HO2S, HC2S	D (Diameter)	H	W	F	S	Yoke Wall Thickness
9MP7 to 16MP7	.516 (13.1)	3.94 (100)	3.0 (76)	1.97 (50)	1.50 (38)	1/2"

MAN Series Actuators - Electric Flow Regulating *(FRC)*

There is an increasing need for remote control of many valves, including Needle multi-turn style valves. Until recently, this required a combination of both pneumatic and electric systems working in tandem, which is cumbersome and expensive to operate.

Parker Autoclave Engineers has developed an All-Electric Regulating/Full Closure actuator for use with the MPI™ (Medium Pressure Inverted (Gland)) connection style needle valves. This actuator is controlled by a 4-20mA signal (by others) which instructs the the opening or closing of this multi-turn valve while reproducing a 4-20mA output of position. 4mA signal instructs the Actuator to torque the valve closed.

Available in Weather-Proof or Explosion-Proof versions, these actuators allow for remote control and feedback to digital control systems using just a 4-20mA control input (external).

Features and Benefits

- 24 VDC, 83 Watt Max Operation (5 wire)
- 4-20mA Remotely Powered Input Signal
- Internally Powered 4-20mA Output of Exact Position
- Oiled-For-Life Bearings (Bronze) and Gears (Sintered)
- Weather-Proof Aluminum Housing
- Explosion-Proof Cast Aluminum Anodized Nema 8/IP67
  CSA Approved, Class 1 Div 1 Groups B, C, D (Hydrogen)
  IECex Ex db IIB+H2 T3 Gb
  24V , 75W max
- Life Expectancy - 250,000 Cycles MTF

Electric Actuated Shut-Off/Flow Regulating

Generalized Flow Coefficient Curves (C_V)

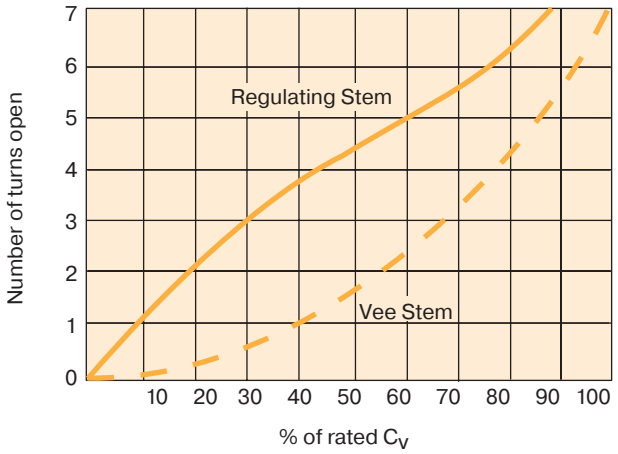

Explosion Proof Electric Actuated Shut-Off/Flow Regulating

Dimensions:

Weather-Proof Version	Explosion-Proof Version
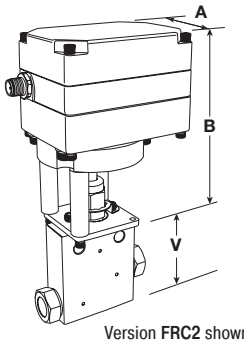 Version **FRC2** shown	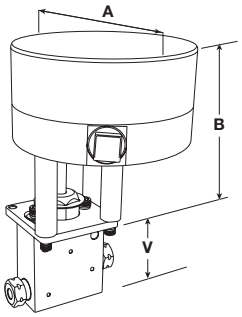 Version **FRC1X** shown

Version	A	B	V
Weather-Proof **FRC1**	3.0" (76.2 mm)	3.67" (93.2 mm)	See Valve Dimension of Body Style on Pages 44-47
Weather-Proof **FRC2** High Torque	3.0" (76.2 mm)	5.57" (141.4 mm)	
Explosion-Proof **FRC1X**	4.25" (107.9 mm)	4.35" (110.4 mm)	
Explosion-Proof **FRC2X** High Torque	4.25" (107.9 mm)	5.86" (148.8 mm)	

Electrical Specifications:

- Electrical Input: 24VDC only, 83 Watt maximum
- Control Input: 4-20mA
- Position Feedback: Independent 4-20mA
- Position Detection: Hall Sensors
- Motor: BLDC brushless DC motor

Position on Power loss:

- Remembers Last Position
- Reseats Valve if Signal is Between 3.0 and 4.16mA

Mechanical Specifications:

- Standard Enclosure - EPD Coated Nema 4X/IP66 Equivalent
- Optional Anodized Aluminum Explosion-Proof Enclosure, Nema 8/IP68, CSA Approved for Class 1, Groups B, C, D /T6 Areas IECex certified to: Ex db IIB+H2 T3 Gb
- 500+ Positions per turn (+/- 0.25° Position Accuracy), 3243 Actuator Positions over Full Span
- Speed Range: FRC1 = 4 sec/turn, FRC2 = 15 sec/turn
- Operational Temperature -40°(-40°C) to 160°F(70°C),
- Actuator Life Expectancy: 250,000 cycles
- 20 ft. cable included with 6 pin/5 wire connector (FRC1 and FRC2 only)

Ordering Guide:

Example Part Number:	9MP7	–	MAN	ARR	–	T	–	SS	–	LBT	FRC1
Ordering Parameters/Options:	Valve Size Connection Type		Valve Series	Valve Body/ Stem Type		Valve Packing (-100 to 600°F Options)		Valve Material		Valve Options	Electric Flow Regulating Actuator
Table Reference: (see below)	A		B	C		D		E		F	G

Example: **9MP7-MANARR-T-SS-LBT-FRC1** = 9/16" MPI, MAN Series Needle Valve, 2 Way Angle/Regulating Stem/Replaceable Seat, 316 Stainless Steel, Cryogenic, Indoor Weather-Proof Electric Actuator

A - Valve Size / Connection Type	
4MP7	1/4" MPI (uses FRC1 size actuator)
6MP7	3/8" MPI (uses FRC1 size actuator)
8MP7	1/2" MPI (uses FRC2 size actuator)
9MP7	9/16" MPI (uses FRC2 size actuator)
12MP7	3/4" MPI (uses FRC2 size actuator)

B - Valve Series	
MAN	MAN Series Needle Valves

C - Valve Body / Stem Type	
LR	2-Way Straight/Regulating Stem
AR	2-Way Angle/Regulating Stem
ARR	2-Way Angle/Regulating Stem/Replaceable Seat
XRD[1]	3-Way/Regulating/1 Inlet - 2 Stem Outlet

D - Valve Packing (-100° to 600°F Options)	
T	PTFE Packing: -423°F (-253°C) to 450°F (232°C)
TG[2]	PTFE/Glass (25%) Packing -423°F (-253°C) to 600°F (316°C) (required with **-HYG** option)
GY[2]	Graphite Yarn Packing to 1000°F (538°C) (required with **-HT** extension)

[1]- **XRD** option would require two actuators unless otherwise specified
[2]- Good ventilation is required when using Valve/Actuator at extended temperatures.
Actuator internal temperature cannot exceed -40° to 160°F.

E - Valve Material	
SS	316 Stainless Steel (Cold Worked)
2507	Super Duplex (Annealed - 9MP7 size not available)

F - Valve Options	
LBT	Cryogenic Applications to -100°F (-73°C)
LT	Low Temp Extension (-100°F to -423°F(-253°C)
HYG	Hydrogen/Helium Applications
XF	Extra Strength Ferrule Set for sizes 12 & 16
HT	High Temp Extension (600° to 1000°F (538°C) Include GY packing
IX	Increase to 20,000 psi Pressure Max per ASME 31.3 Chapter IX

G - Electric Flow Regulating Actuator	
FRC1	Indoor/Weather-Proof
FRC2	Indoor/Weather-Proof w/Torque Reduction Gearing (8 to 12MP7 sizes only)
FRC1X	Explosion-Proof - Class 1, Div. 1, Groups B, C, and & D (Hydrogen capable)
FRC2X	Explosion-Proof with Div 2 Explosion Proof Cable Option (8 to 12MP7 sizes only)
XPFL	Pre-wired Flying Leads, 1/2" NPT Exp Proof Enclosure potted for Class1, Div1, Groups B,C,D areas to terminate larger gauge wire "outside" FRC enclosure

MADBN Series Double Block and Bleed Needle Valves

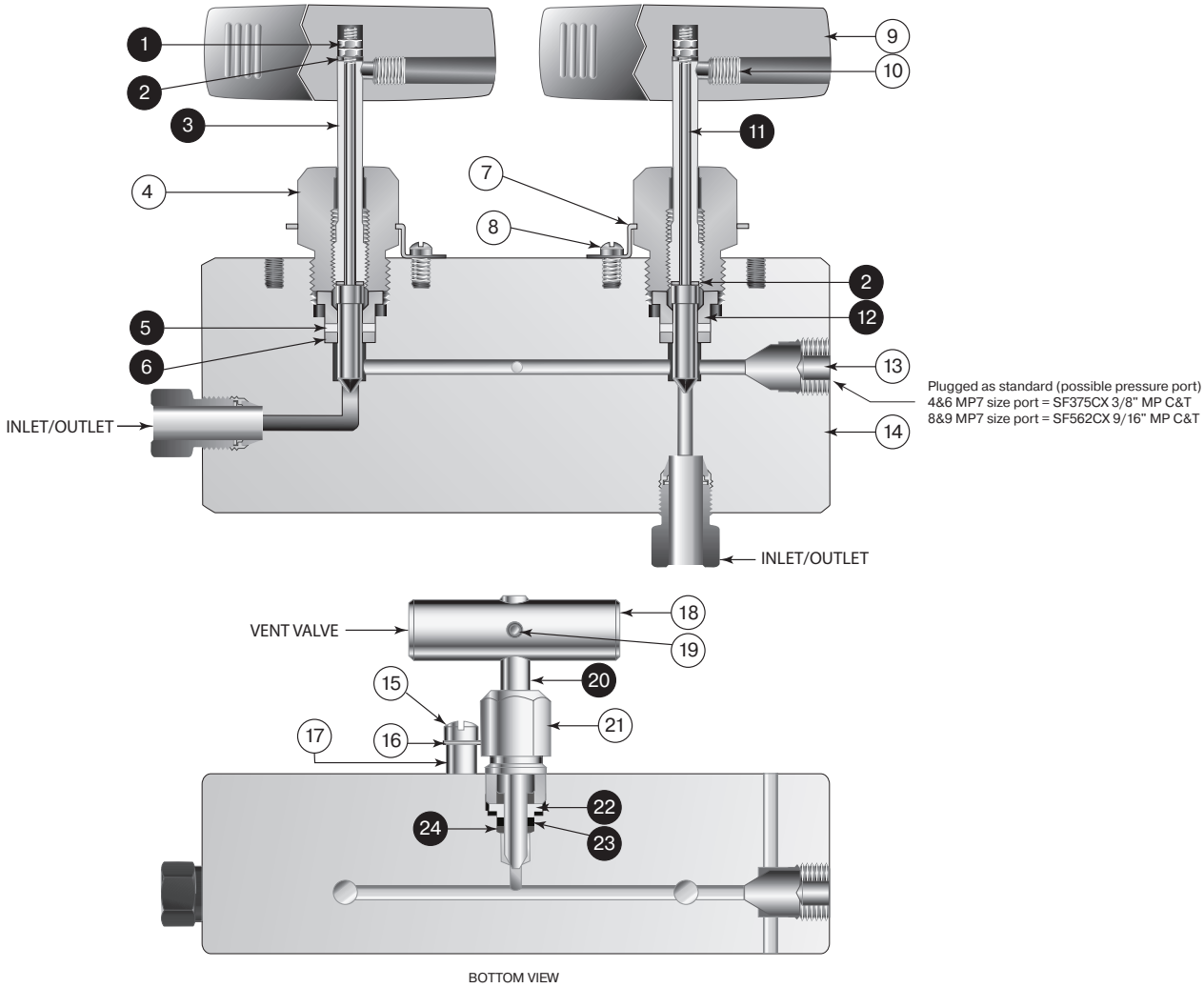

Material of Construction

Item#	Description	Material
❶	Hex Nut	Stainless
❷	Thrust Washer	17-4PH
❸	Stem Sleeve	304 SS
4	Packing Gland	Ampco 45
❺	Packing	PTFE
❻	Bottom Washer	316 SS
7	Locking Device	302 SS
8	Pan Hd Screw 10-24 x 1/4"	18-8 SS
9	Handle	316 SS
10	Set Screw	Stainless
⓫	Stem	316 SS
⓬	Packing Washer	Ampco 45

Item#	Description	Material
13	Flush Plug	316 SS
14	Body	316 SS
15	Pan Head Screw M3.5x.6x10mm	Stainless
16	Locking Device	316 SS
17	Spacer	316 SS
18	Handle	316 SS
19	Spring Pin	18-8 SS
⓴	Stem	316 SS
21	Packing Gland	316 SS
㉒	Packing Washer	Ampco 45
㉓	Packing	PTFE
㉔	Bottom Washer	316 SS

❶ Black filled item# = Typical spare parts found in Repair Kit

MADBN Series Double Block and Bleed Needle Valves

Parker Part No.	MAX Pressure PSIG	Connection	Orifice inch (mm)	Dimensions - inches (mm)													Repair Lits
				A	B	C	D	D1	E	F	G	H	M	N	P	V	
4MP7-MADBNLB-T-SS	15K/20 ksi	1/4" MPI™	0.093 (2.36)	5.75 (146.05)	1.25 (31.75)	0.50 (12.70)	1.50 (38.10)	1.13 (28.70)	2.38 (60.45)	3.00 (76.20)	1.00 (25.40)	4.89 (124.21)	0.69 (17.53)	2.88 (73.15)	1.50 (38.10)	0.50 (12.70)	R4MADBN
6MP7-MADBNLB-T-SS	15K/20 ksi	3/8" MPI™	0.093 (2.36)	6.00 (152.40)	1.38 (35.05)	0.63 (16.00)	1.50 (38.10)	1.13 (28.70)	2.38 (60.45)	3.00 (76.20)	1.00 (25.40)	4.89 (124.21)	0.69 (17.53)	3.00 (76.20)	1.50 (38.10)	0.50 (12.70)	R6MADBN
8MP7-MADBNLB-T-SS	15K/20 ksi	1/2" MPI™	0.093 (2.36)	7.50 (190.50)	1.50 (38.10)	0.69 (17.53)	2.38 (60.45)	1.75 (44.45)	3.58 (90.93)	4.00 (101.60)	1.00 (25.40)	6.63 (168.40)	0.69 (17.53)	3.75 (95.25)	1.75 (44.5)	0.75 (19.1)	R8MADBN
9MP7-MADBNLB-T-SS	15K/20 ksi	9/16" MPI™	0.093 (2.36)	7.50 (190.50)	1.50 (38.10)	0.75 (19.05)	2.38 (60.45)	1.75 (44.45)	3.58 (90.93)	4.00 (101.60)	1.00 (25.40)	6.63 (168.40)	0.69 (17.53)	3.75 (95.25)	1.75 (44.5)	0.75 (19.1)	R9MADBN

For 2507 Super Duplex option, replace **-SS** with **-2507**
-XF Ferrules are required for 3/4" and 1" 316 SS over 10 ksi or any 2507 Super Duplex Tubing.
-IX suffix for pressure max to 20,000 psi MAWP (per ASME B31.3 Chapter IX)
9/16" MPI™ size not available in 2507 Super Duplex (1/2" MPI™ size only)

Valve Packing Options same as Standard Needle Valve Options
Repair Kits include parts for 2 valve stems and 1 vent stem
Include any original valve suffix when ordering Repair Kit.

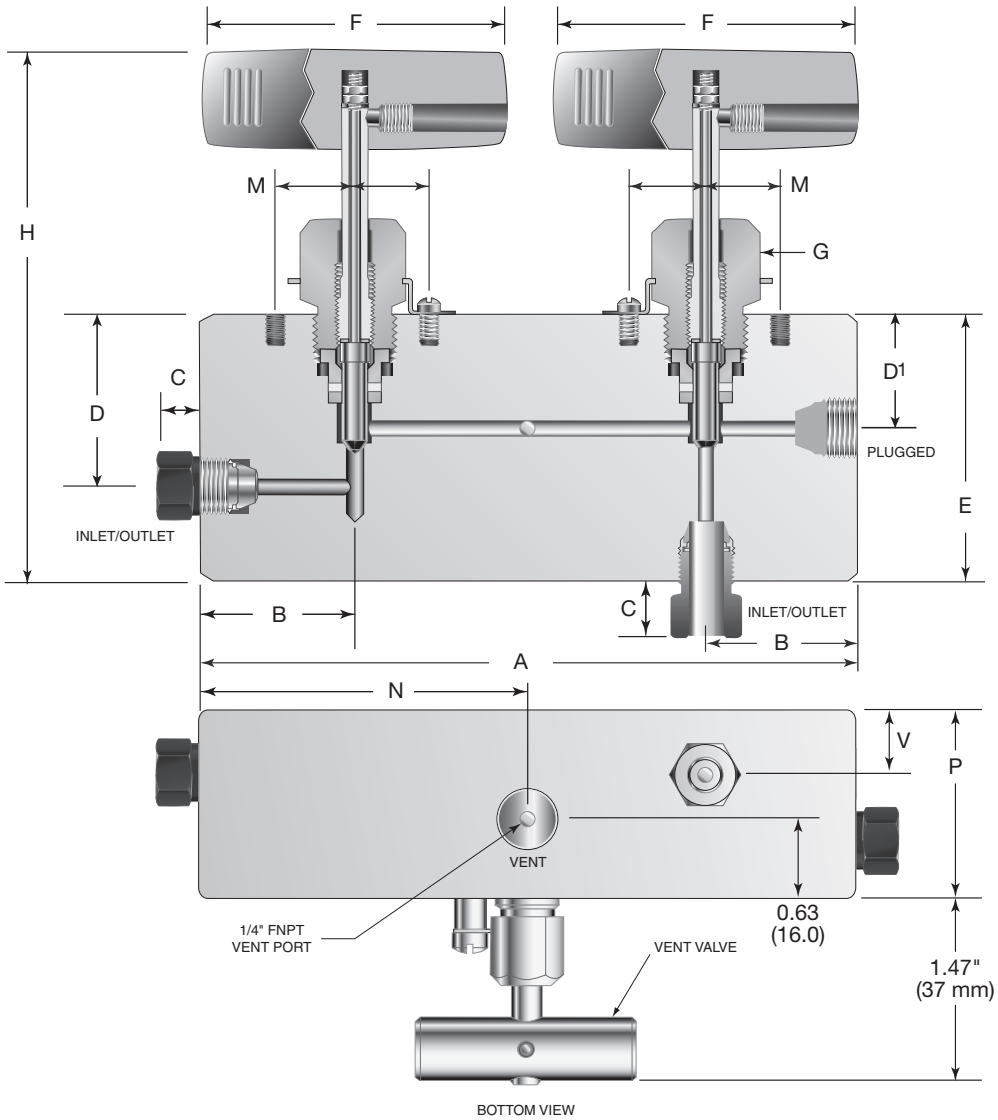

NOTES:
G = Packing gland mounting hole drill size
H = Dimension with stem in closed position
All vent connections are 1/4" NPT

MAGV Series Single Block and Bleed Gauge Valve

Gauge valve and Bleed valve are designed to be used together. Bleed valve can be placed in any of the three possible outlet locations as desired.

Parker Part No.	MAX Pressure PSIG	Connection	Orifice inch (mm)	Dimensions - inches (mm)									Repair Kits
				A	B	C	D	E	F	G	H	J	
6MP7-MAGV-T-SS	15K/20 ksi	3/8" MPI™	0.125 (3.18)	3.63 (92.20)	2.50 (63.50)	1.25 (31.75)	1.39 (35.31)	1.25 (31.75)	0.50 (12.70)	0.94 (23.88)	0.25 (6.35)	0.25 (6.35)	R6MAGV
8MP7-MAGV-T-SS	15K/20 ksi	1/2" MPI™	0.125 (3.18)	4.70 (119.38)	3.00 (76.20)	1.50 (38.10)	1.88 (47.75)	1.75 (44.45)	0.65 (16.51)	0.94 (23.88)	0.38 (9.65)	0.38 (9.65)	R8MAGV
9MP7-MAGV-T-SS	15K/20 ksi	9/16" MPI™	0.125 (3.18)	4.70 (119.38)	3.00 (76.20)	1.50 (38.10)	1.88 (47.75)	1.75 (44.45)	0.65 (16.51)	0.94 (23.88)	0.38 (9.65)	0.38 (9.65)	R9MAGV

For 2507 Super Duplex option, replace **-SS** with **-2507**
-XF Ferrules are required for 3/4" and 1" 316 SS over 10 ksi or any 2507 Super Duplex Tubing.
-IX suffix for pressure max to 20,000 psi MAWP (per ASME B31.3 Chapter IX)
9/16" MPI™ size not available in 2507 Super Duplex (1/2" MPI™ size only)

Valve Packing Options same as Standard Needle Valve Options
Repair Kits include parts for 2 valve stems and 1 vent stem
Include any original valve suffix when ordering Repair Kit.

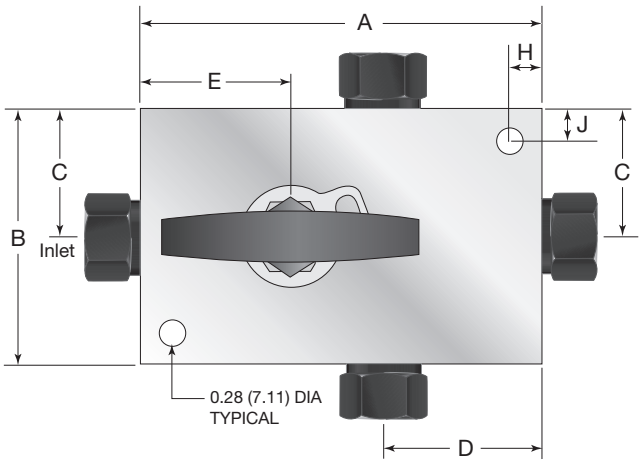

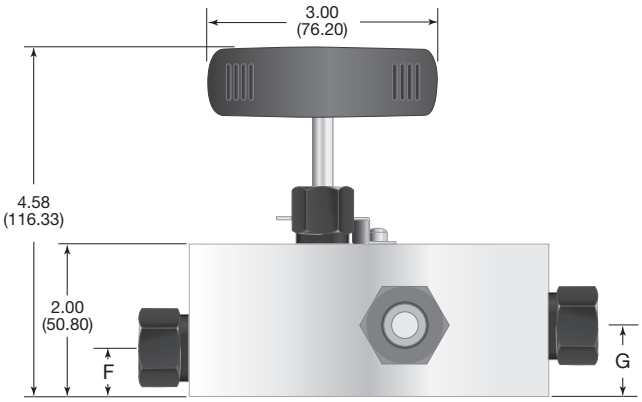

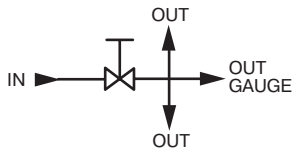

Material of Construction

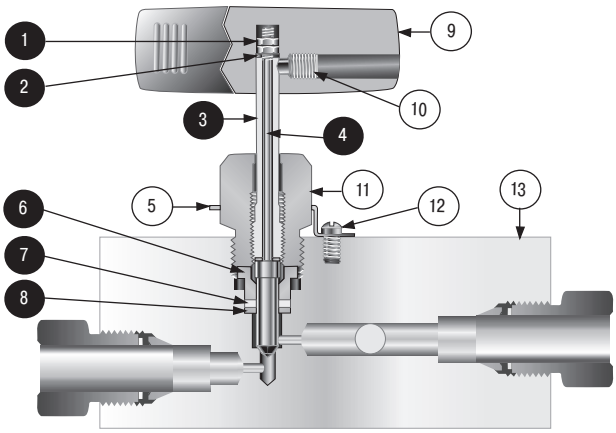

Item#	Description	Material
❶	Hex Nut	300 Series SS
❷	Thrust Washer	17-4PH
❸	Stem Sleeve	304 SS
❹	Stem	316 SS
5	Locking Device	302 SS
❻	Packing Washer	Ampco 45
❼	Packing	PTFE
❽	Bottom Washer	316 SS
9	Handle	316 SS
10	Pan Hd Screw 10-24 x 1/4"	300 Series SS
11	Packing Gland	Ampco 45
12	Screw	18-8 SS
13	Valve Body	316 SS

❶ Black Filled Item # = Typical spare parts found in Repair Kit

MABV Series Bleed Valves

Parker Part No.	Max Pressure PSIG	Connection	Orifice inch (mm)	Dimensions - inches (mm) A	B	C
6T7-MABV-V-SS	15K/20 ksi	3/8" Tube Stub	0.094 (2.39)	4.05 (102.87)	3.22 (81.79)	1.61 (40.89)
8T7-MABV-V-SS	15K/20 ksi	1/2" Tube Stub	0.094 (2.39)	4.50 (114.30)	3.68 (93.47)	1.88 (47.75)
9T7-MABV-V-SS	15K/20 ksi	9/16" Tube Stub	0.094 (2.39)	4.56 (115.82)	3.74 (95.00)	1.94 (49.28)

For 2507 Super Duplex option, replace **-SS** with **-2507**

-XF Ferrules are required for 3/4" and 1" 316 SS over 10 ksi or any 2507 Super Duplex Tubing.

-IX suffix for pressure max to 20,000 psi MAWP (per ASME B31.3 Chapter IX)

9/16" MPI™ size not available in 2507 Super Duplex (1/2" MPI™ size only)

Oring options:

BN = Buna N Nitrile (-20 to 250°F)

EPR - Ethylene Propylene Rubber (-20 to 250°F)

KZ = FFKM Highly Fluorocarbon Rubber (30 to 500°F)

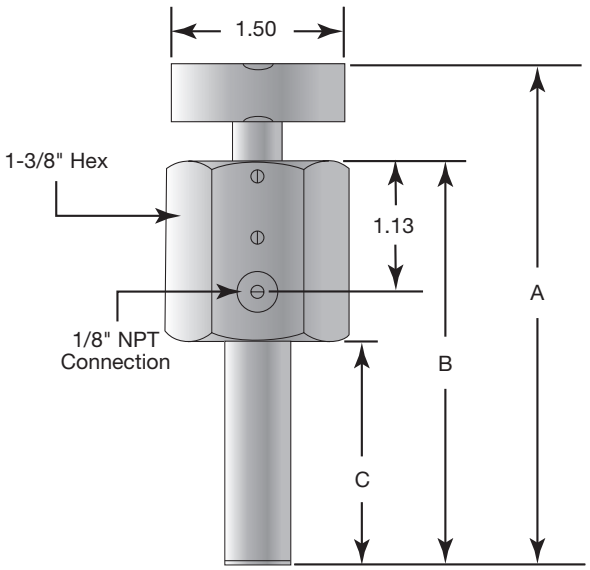

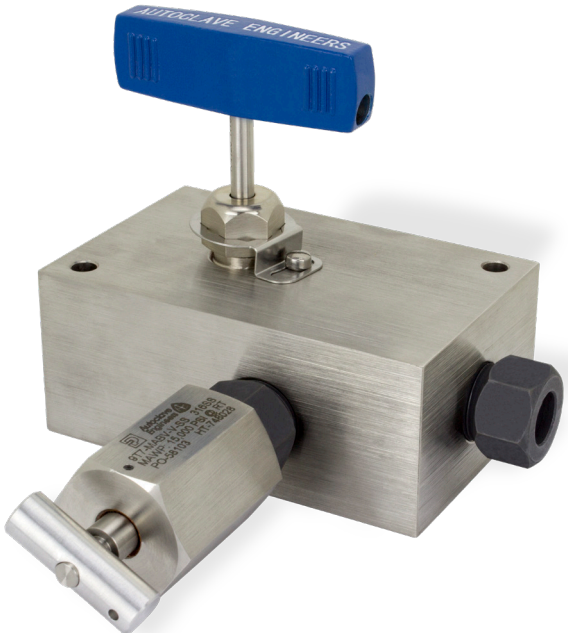

MAGV Series Gauge Valve with MABV Vent valve shown in one of three possible outlet locations.

Material of Construction

Item#	Qty	Description	Material
1	1	Handle	Aluminum
2	2	Spring Pin	18-8 SS
3	1	Oring	Fluorocarbon Rubber
4	1	Body	316 SS
5	1	Hex Socket Set Screw	300 Series SS
6	1	Stem	316 SS

NOTE:
No repair kit available, replace valve.

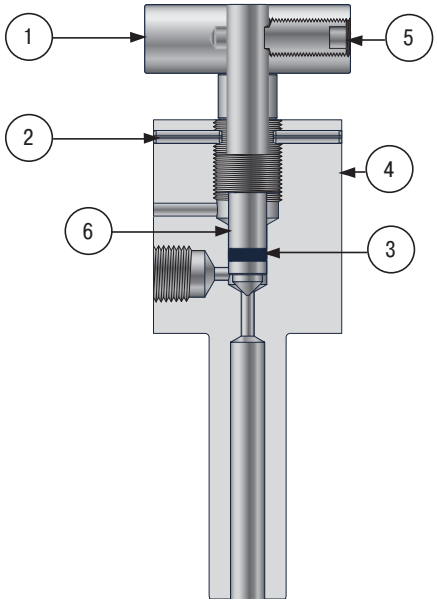

MAB Series Ball Valves with MPI™ Style Connections

Pressures to 20,000 psi (1380 bar)

Parker MAB series 2-Way and 3-Way Ball Valves are in a class by themselves... Our single trunnion style Ball/Stem does not allow the separation that is common to slotted ball type designs. Our PEEK™ ball seats are re-torqueable if necessary unlike other shoulder stop designs. Valve options include thru-bore sizes that are unmatched in flow capability.

When sizing ball valves, options permit selection of both the bore size AND the connection size to maximize your process conditions and reduce pressure drop. The MPI™ Double Ferrule connection delivers fast, easy make-up and reliable bubble-tight performance in either liquid or gas service.

MPI™ tube connection sizes from 1/4" to 1" can be mated to up to 3 different bore size valves. Ball Valves can be either electrically or pneumatically actuated. See pages 68-76 for a complete selection for any valve style/size

Features and Benefits

- One-piece trunnion style ball/stem design eliminates shear failure and reduces side loading found in two-piece designs
- Re-Torqueable PEEK™ Seat Glands for longer life
- Cold Worked 316 Stainless Steel Material is Standard, 2507 Annealed Super Duplex as option
- Full Port flow path minimizes pressure drop
- Low friction, pressure assisted graphite filled PTFE stem seal increases cycle life and reduces operating torque
- Temperature range from 0°F (-18°C) to 400°F (204°C) as standard, from -50°F (-46°C) to 500°F (260°C) with options.
- Fluoroelastomer/FKM o-rings are standard, see ordering chart for options
- 2-Way Bi-Directional and and 3-Way (Switching or Diverter Styles) available

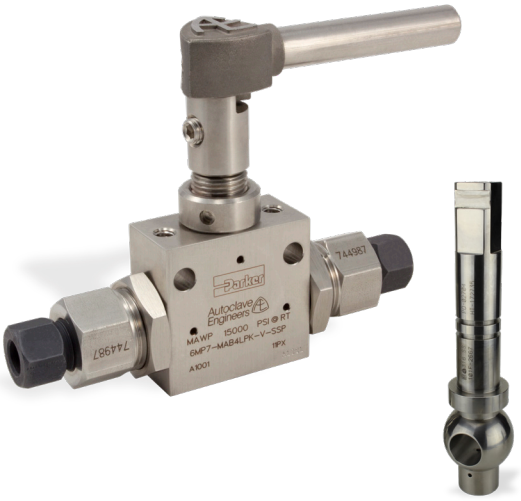

Pneumatic and Electric Actuators

Pneumatic ball valve actuators are found on pages 68-70 and are available for every bore/size option we offer (90° or 180° as needed). Our standard housing is corrosion resistant anodized aluminum and other materials are available. Position identification and NAMUR VDI/VDE 3845 and ISO 5211 mounting configuration for NAMUR solenoid valves, limit switches, or positioners is standard.

Electric actuators (pages 68-76) are available in Weatherproof or Explosionproof styles depending on location. Both varieties come standard with two (open/closed) position switches (SPDT) and additional switches can be added. Explosionproof version includes an external handwheel for manual operation. Most valves have 24VDC, 120VAC, or 220VAC options.

How to Order 2-Way and 3-Way MAB Series Ball Valves

When ordering Parker MPI™ Ball valves, consider first the bore size to verify that it is large enough for the flow rate needed, then choose the end connection. We have flow and pressure options not found anywhere else. The correct part number is easily derived from the following example and ordering chart. The ten product characteristics required are coded as shown in the chart.

The following example describes an MAB Series, three-way diverter ball valve with a .375" orifice, fluorocarbon rubber seals, 9/16" MPI™ medium pressure inverted connections on all ports, stainless steel body and the optional lock out device.

Typical part number example: **9MP7-MAB6XPKD-V-SSP-LD** (part number is created based on customer selection of product parameters, see below for example)

9	MP7	-	MAB	6	X	PK	D	-	V	-	SSP	-	LD
Inlet/Outlet Connection Size	Connection Type		Valve Series	Bore Size	Valve Type	Seat Material	3-Way Valve Type		Seat Gland Seal Material		Body Material		Options
4 1/4" **6** 3/8" **8** 1/2" **9** 9/16" **12** 3/4" **16** 1"	**MP7** Parker MPI™		**MAB**	**3** 3/16" [2] **4** 1/4" [1] **6** 3/8" **8** 1/2" **12** 3/4" [1]	**L** 2-Way **X** 3-Way	**PK** PEEK	**Blank** Selector **D** Diverter		**V***** Fluorocarbon Rubber **KZ**** FFKM Highly Fluorinated Fluorocarbon Rubber **BN** Nitrile Rubber **EPR** Ethylene Propylene Rubber (used with **-HYG** option) **C**** PTFE U-Cup		**SSP** Stainless Steel ***2507** Super Duplex *9/16" MPI™ size not available in 2507 Super Duplex (1/2" MPI™ size only)		**LD** Lock Out Device (LPK & XPKD versions only) **XF** High Strength Ferrules **HYG** (required for Hydrogen or Helium service) **NC** NACE Certified **IX** (required for max pressure of 20 ksi) (See p/n charts for exceptions) Actuator Options (see pages 68-76)

[1] Only Available with 2-Way Valves
[2] Only Available with 3-Way Valves
NOTE: Critical gas applications such as hydrogen or helium must use **-HYG** option.
-XF ferrules required on sizes 12 & 16 for pressures over 10,000 psi or any 2507 Super Duplex tubing
-IX suffix needed to increase MAWP to 20,000 psi (per ASME B31.3 Chapter IX) within limits identified
Consult factory with application details for assistance.

** Limited availability see O-ring options below

*** Standard o-ring material

Options

Standard valve has Fluorocarbon Rubber o-rings (**-V**) [0° to 400°F (-18° to 204°C)]

KZ - Standard valve with FFKM Highly Fluorinated Fluorocarbon Rubber o-rings [30°F to 500°F (0° to 260°C).
NOTE: Not available with 3/4" orifice 2-Way valves

C - Standard valve with PTFE U-Cup Seal [-50° to 500°F (-46° to 260°C)].
NOTE: Only used with 3/4" orifice 2-Way valves

BN - Standard valve with Buna-N (Nitrile) Rubber o-rings [-40° to 225°F (-40° to 121°C)].

EPR - Standard valve with Ethylene Propylene Rubber o-rings [-50° to 250°F (-46° to 121°C). (use with **-HYG** option)

LD - Standard valve with factory-installed lock out device. LPK & XPKD versions only. (See page 67 for clamshell lockout options for XPK versions).

NC - NACE MR0175/ISO 15156 materials and hardness verification - Certificate generated

HYG - High Cycle Gaseous Hydrogen/Helium modification - Required for use with this media.

2-Way Ball Valves

Bore Size	Part Number	Max Pressure PSIG	Connection	Inches			Repair Kits
				Minimum Valve Orifice	Cv	Overall Length	
1/4"	4MP7-MAB4LPK-V-SSP	15K/20 ksi	1/4" MPI™	0.125	0.25	4.19	RMAB4L-VSSP
	6MP7-MAB4LPK-V-SSP	15K/20 ksi	3/8" MPI™	0.250	1.51	4.19	
	8MP7-MAB4LPK-V-SSP	15K/20 ksi	1/2" MPI™	0.250	1.51	5.34	
	9MP7-MAB4LPK-V-SSP	15K/20 ksi	9/16" MPI™	0.250	1.51	5.34	
3/8"	8MP7-MAB6LPK-V-SSP	15K/20 ksi	1/2" MPI™	0.312	3.24	6.27	RMAB6L-VSSP
	9MP7-MAB6LPK-V-SSP	15K/20 ksi	9/16" MPI™	0.375	5.20	6.27	
1/2"	12MP7-MAB8LPK-V-SSP	15,000	3/4" MPI™	0.500	10.20	10.85	RMAB8L-VSSP
	12MP7-MAB8LPK-V-2507	15K/20 ksi	3/4" MPI™	0.500	10.20	10.85	RMAB8L-V2507 (-IX)
	16MP7-MAB8LPK-V-SSP	15,000	1" MPI™	0.500	10.20	10.85	RMAB8L-VSSP
	16MP7-MAB8LPK-V-2507	15K/20 ksi	1" MPI™	0.500	10.20	10.85	RMAB8L-V2507 (-IX)
3/4"	12MP7-MAB12LPK-V-SSP	15,000	3/4" MPI™	0.531	11.80	9.18	RMAB12L-VSSP
	12MP7-MAB12LPK-V-2507	15K/20 ksi	3/4" MPI™	0.531	11.80	9.18	RMAB12L-V2507 (-IX)
	16MP7-MAB12LPK-V-SSP	15,000	1" MPI™	0.688	21.00	9.18	RMAB12L-VSSP
	16MP7-MAB12LPK-V-2507	15K/20 ksi	1" MPI™	0.688	21.00	9.18	RMAB12L-V2507 (-IX)

For 2507 Super Duplex option, replace **-SSP** with **-2507**. Standard Repair Kits include Fluorocarbon rubber orings - use **MAB** option codes for different seal material requirements.

9/16" MPI™ size not available in 2507 Super Duplex (1/2" MPI™ size only).

-XF Ferrules are required for 3/4" and 1" 316SS over 10,000 psi or all 2507 Super Duplex Tubing.

-IX suffix needed to increase MAWP to 20,000 psi (per ASME B31.3 Chapter IX) 1/2" & 3/4" bore valves to 20,000 psi in 2507 Super Duplex material only.

NOTE: Ball Valves for critical gas applications such as Hydrogen or Helium must use **-HYG** option. Consult Factory for assistance.

Material of Construction

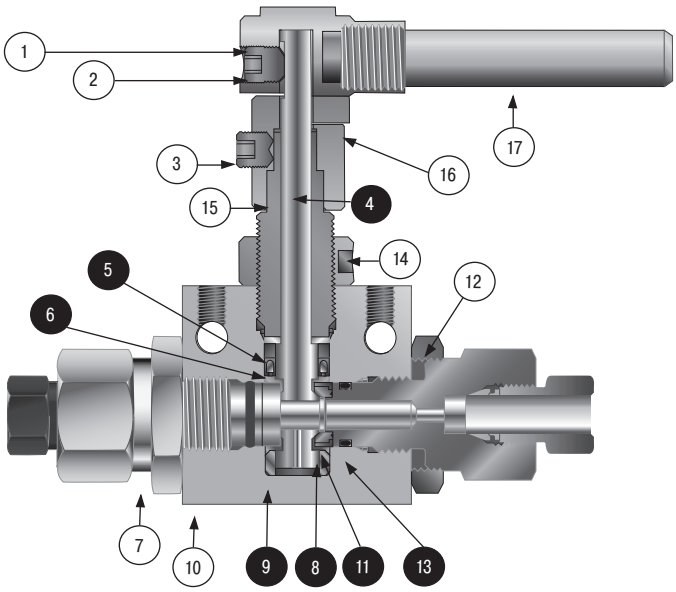

Item#	Description	Material
1	Handle Hub	316 SS
2	Set Screw	Stainless
3	Set Screw	Stainless
❹	One Piece Ball and Stem	316 SS
❺	Thrust Washer	Ampco 45
❻	Spring Energized Seal	Graphite/Carbon PTFE
7	Seat Gland	316 CW SS
❽	Seat Retainer	316 CW SS
❾	Bottom Bearing	PEEK
10	Body	316 SS
⓫	Seat	PEEK
12	Locknut	316 SS
⓭	O-ring	Viton
14	Locking Piece	316 SS
15	Packing Gland	316 CW SS
16	Stopping Device	316 SS
17	Handle	304 SS

❶ Black Filled Item # = Typical spare parts found in Repair Kit

Dimensions

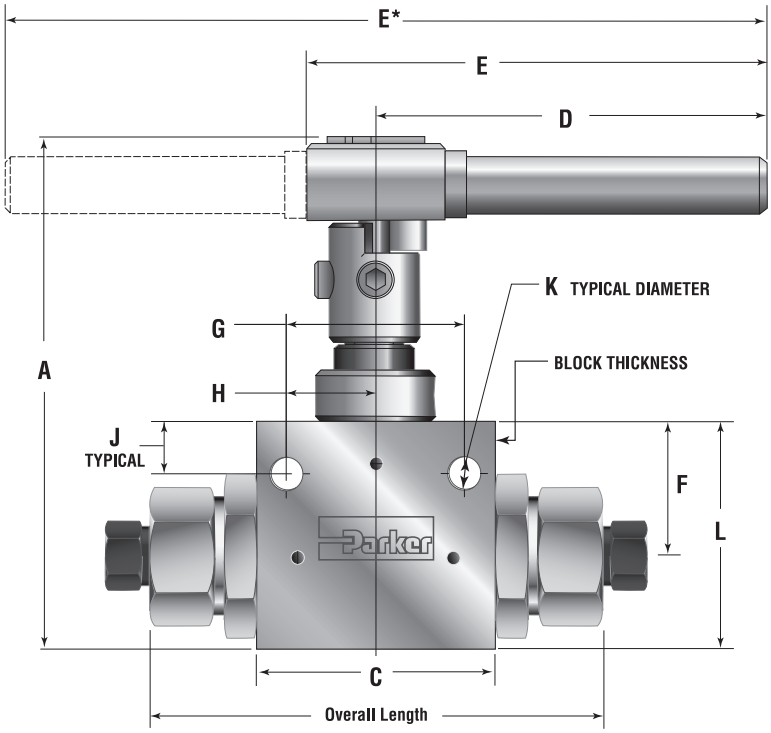

Bore Size	Inches (mm)										
	A	C	D	E	F	G	H	J	K	L	Block Th'k
1/4"	4.33 (109.99)	2.00 (50.80)	3.37 (85.55)	3.83 (97.28)	1.13 (28.58)	1.50 (38.10)	0.75 (19.05)	0.44 (11.18)	0.28 (7.11)	1.91 (48.41)	1.00 (25.40)
3/8"	4.99 (126.75)	3.00 (76.20)	4.99 (126.75)	5.45 (138.43)	1.38 (34.92)	2.00 (50.80)	1.00 (25.40)	0.41 (10.31)	0.28 (7.11)	2.50 (63.50)	1.38 (34.92)
1/2"	6.43 (163.32)	4.13 (104.78)	5.12 (130.05)	10.24* (260.10)	1.76 (44.70)	3.00 (76.20)	1.50 (38.10)	0.50 (12.70)	0.28 (7.11)	3.55 (90.17)	1.75 (44.45)
3/4"	10.13 (257.30)	4.50 (114.30)	11.00 (279.40)	22.00* (558.80)	2.47 (62.70)	3.25 (82.60)	1.63 (41.40)	0.69 (17.50)	0.41 (10.40)	4.50 (114.30)	3.00 (76.20)
3/4" 2507 -IX Body	10.26 (260.6)	4.50 (114.30)	11.00 (279.40)	22.00* (558.80)	2.47 (62.70)	3.25 (82.60)	1.63 (41.40)	0.69 (17.50)	0.41 (10.40)	4.68 (118.9)	3.50 (88.9)

* = E* Double Handle Dimension

Panel Hole Sizes

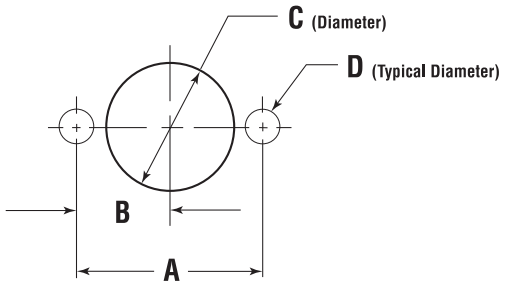

Bore Size	Inches (mm)				Body Mounting
	A	B	C	D	
1/4"	1.50 (38.10)	0.75 (19.05)	1.06 (26.92)	0.28 (7.11)	1/4" - 20 Thread
3/8"	2.00 (50.80)	1.00 (25.40)	1.50 (38.10)	0.28 (7.11)	
1/2"	3.00 (76.20)	1.50 (38.10)	1.88 (47.63)	0.28 (7.11)	
3/4"	3.25 (82.60)	1.63 (41.40)	2.38 (60.30)	0.41 (10.40)	3/8" - 16 Thread

Dimensions in inches are for reference only, subject to change.

3-Way Ball Valves

Bore Size	Part Number 3-Way, 90° Diverter	Part Number 3-Way, 180° Selector	Max Pressure PSIG	CONN.	Inches					Repair Kit	
					Minimum Valve Orifice	Cv	Overall Length	A	M	Diverter	Selector
3/16"	4MP7-MAB3XPKD-V-SSP	4MP7-MAB3XPK-V-SSP	15K/20 ksi	1/4" MPI	0.125	0.33	4.83	5.66	0.97	RMAB3XD-VSSP	RMAB3X-VSSP
	6MP7-MAB3XPKD-V-SSP	6MP7-MAB3XPK-V-SSP	15K/20 ksi	3/8" MPI	0.188	0.50	4.83	5.66	0.97		
	8MP7-MAB3XPKD-V-SSP	8MP7-MAB3XPK-V-SSP	15K/20 ksi	1/2" MPI	0.188	0.50	5.84	6.23	1.54		
	9MP7-MAB3XPKD-V-SSP	9MP7-MAB3XPK-V-SSP	15K/20 ksi	9/16" MPI	0.188	0.50	5.84	6.23	1.54		
3/8"	6MP7-MAB6XPKD-V-SSP	6MP7-MAB6XPK-V-SSP	15,000	3/8" MPI	0.250	1.50	6.28	6.90	1.54	RMAB6XD-VSSP	RMAB6X-VSSP
	8MP7-MAB6XPKD-V-SSP	8MP7-MAB6XPK-V-SSP	15,000	1/2" MPI	0.312	2.00	6.28	6.90	1.54		
	9MP7-MAB6XPKD-V-SSP	9MP7-MAB6XPK-V-SSP	15,000	9/16" MPI	0.380	2.10	6.28	6.90	1.54		
1/2"	12MP7-MAB8XPKD-V-SSP	12MP7-MAB8XPK-V-SSP	10,000	3/4" MPI	0.500	4.40	10.85	8.35	2.22	RMAB8XD-VSSP	RMAB8X-VSSP
	16MP7-MAB8XPKD-V-SSP	16MP7-MAB8XPK-V-SSP	10,000	1" MPI	0.500	4.40	10.85	8.35	2.22		

For 2507 Super Duplex option, replace **-SSP** with **-2507**. Standard Repair Kits include Fluorocarbon rubber orings - use **MAB** option codes for different seal material requirements.

9/16" MPI™ size not available in 2507 Super Duplex (1/2" MPI™ size only)

3/16" Side inlet pressure = 15,000 psi max, 3/8" Side inlet pressure = Not Recommended, 1/2" Side inlet pressure = 10,000 psi max

-XF Ferrules are required for 3/4" and 1" 316SS over 10,000 psi or all 2507 Super Duplex Tubing.

-IX suffix needed to increase MAWP to 20,000 psi (per ASME B31.3 Chapter IX) (3/16" bore 3-way sizes only)

NOTE: Ball Valves for critical gas applications such as Hydrogen or Helium must use **-HYG** option. Consult Factory for assistance.

Material of Construction

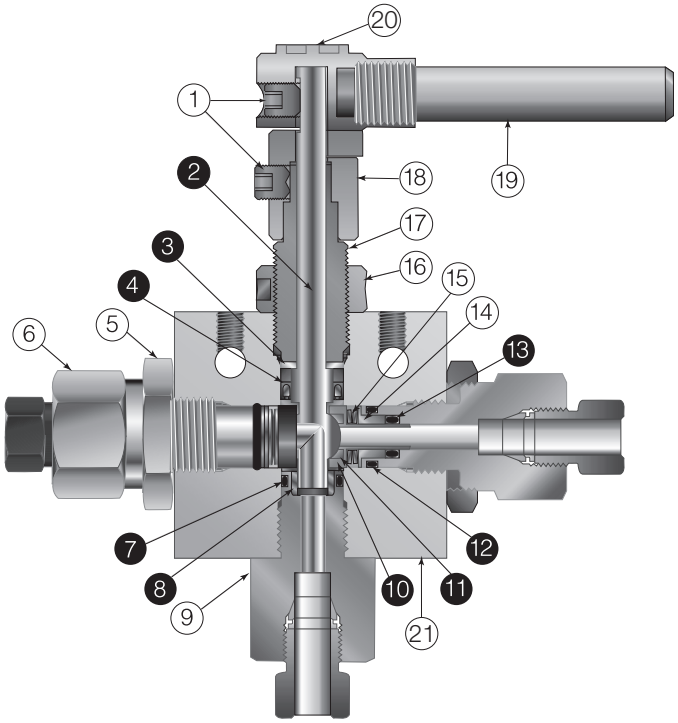

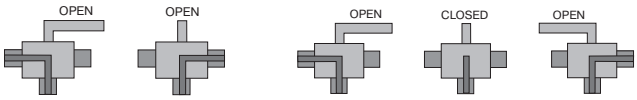

3-Way Diverter Valve
90° Turn

3-Way Selector Ball Valve
180° Turn

Item#	Description	Material
1	Set Screw	Stainless
❷	One Piece Ball and Stem	316 SS
❸	Thrust Washer	Ampco 45
❹	Spring Energized Seal	Graphite/Carbon PTFE
5	Locknut	316 SS
6	Seat Gland	316 CW SS
❼	O-ring	Fluorocarbon Rubber
❽	Bearing	AMPCO 45
9	Bottom Gland	316 CW SS
❿	Seat Retainer	316 CW SS
⓫	Carbon Filled Peek Seats	Arlon 1260
⓬	O-ring	Fluorocarbon Rubber
⓭	O-ring	Fluorocarbon Rubber
14	Belleville Backup	316 CW SS
15	Belleville Washers	302 SS
16	Locking Piece	316 SS
17	Packing Gland	316 CW SS
18	Stopping Device	316 SS
19	Stainless Steel Handle	304 SS
20	Handle Hub	316 SS
21	Body	316 CW SS

❶ Black Filled Item # = Typical spare parts found in Repair Kit

Dimensions

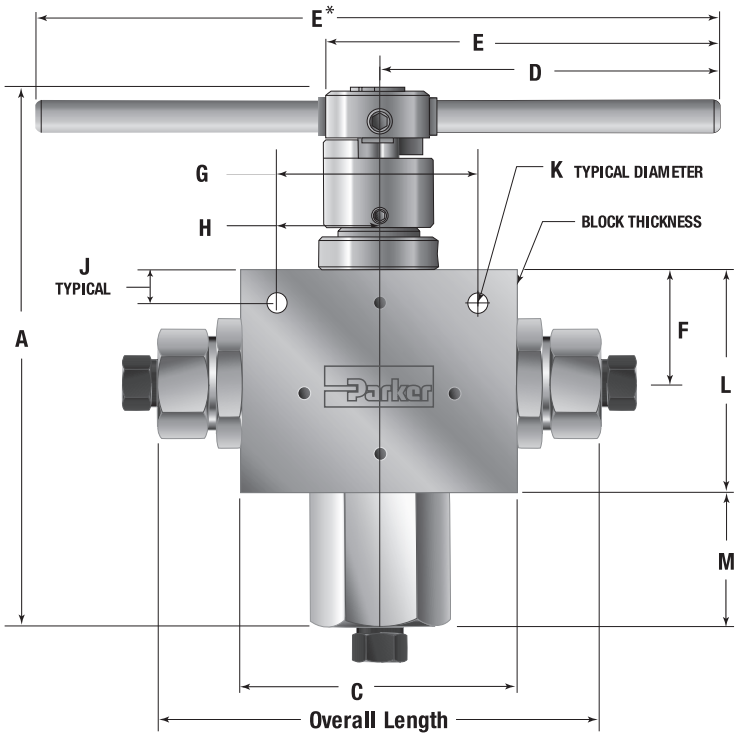

Bore Size	Inches (mm)									
	C	D	E	F	G	H	J	K	L	Block Th'k
3/16"	2.50 (63.50)	3.37 (85.55)	3.90 (99.02)	1.12 (28.45)	1.50 (38.10)	0.75 (19.05)	0.43 (10.92)	0.28 (7.11)	2.26 (57.40)	1.00 (25.40)
3/8"	3.00 (76.20)	4.99 (126.82)	5.52 (140.32)	1.38 (34.93)	2.00 (50.80)	1.00 (25.40)	0.41 (10.31)	0.28 (7.11)	2.88 (73.03)	1.38 (34.92)
1/2"	4.13 (104.78)	5.09 (129.29)	10.18* (258.57)	1.66 (42.16)	3.00 (76.20)	1.50 (38.10)	0.50 (12.70)	0.28 (7.11)	3.34 (84.94)	1.75 (44.45)

Dimensions in inches are for reference only, subject to change.

Panel Hole Sizes

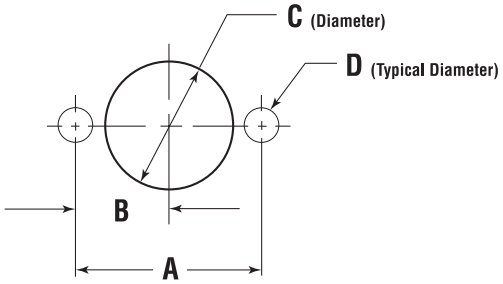

Bore Size	Inches (mm)				Body Mounting
	A	B	C	D	
3/16"	1.50 (38.10)	0.75 (19.05)	1.06 (26.92)	0.28 (7.11)	1/4" - 20 Thread
3/8"	2.00 (50.80)	1.00 (25.40)	1.50 (38.10)	0.28 (7.11)	
1/2"	3.00 (76.20)	1.50 (38.10)	1.88 (47.63)	0.28 (7.11)	

Dimensions in inches are for reference only, subject to change.

90° Turn Lock-out Options:

Ball Valves *(LPK & XPKD versions only)*

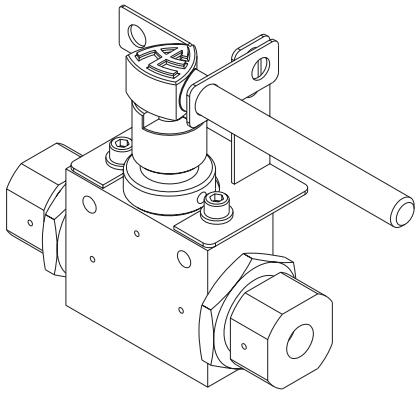

Versions: *MAB4L, MAB6L, MAB3XPKD, MAB6XPKD*

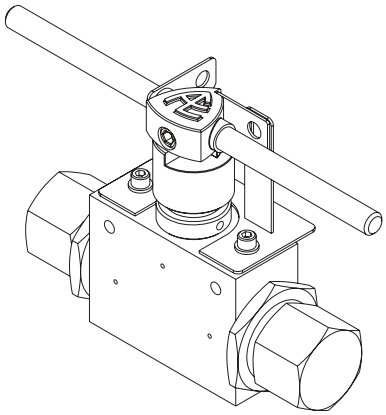

Versions: *MAB8L, MAB12L, MAB8XPKD*

-LD Suffix option

Using the "**-LD**" suffix option delivers the bolt-on Stainless Steel locking bracket shown above for the following Ball Valve Sizes:

All 2-Way Ball Valves
All XPKD (90° rotation) Series Ball Valves

We do not offer a metal lockout bracket for the 3-way 180° handle rotation ball valves (MAB3XPK, MAB6XPK, MAB8XPK). Only Clam Shell Type shown below. To upgrade valves already in operation, order mounting kits using these part numbers: (includes bolting hardware, and modified handle, but does not include lock)

2B4-L	For all MAB4LPK valves	3BD3-L	For all MAB3XPKD valves
2B6-L	For all MAB6LPK valves	3BD6-L	For all MAB6XPKD valves
2B8-L	For all MAB8LPK valves	3BD8-L	For all MAB8XPKD valves
2B12-L	For all MAB12LPK valves		

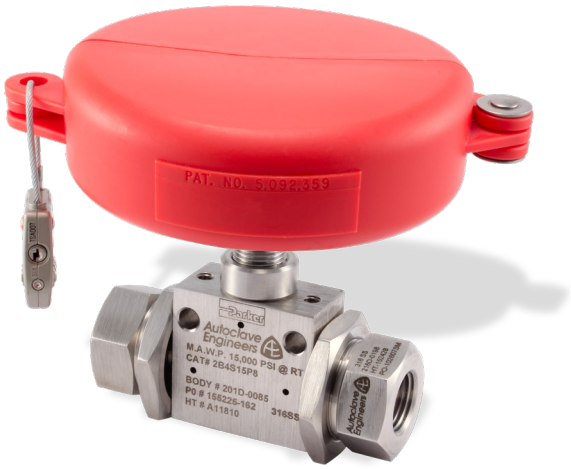

Ball Valve, Clam Shell Handle Lock-Out

(ordered separately, lock not included)

Clam Shell Design covers ball valve handle to prevent unauthorized access during any Lock-Out, Tag-Out maintenance or emergency situation. This clamshell design is available in four (4) sizes dependent on handle length:

P/N AE004855 - 1" to 2.5" handle length
P/N 90088 - 2.5" to 5.0" handle length
P/N 90194 - 6.5" to 10" handle length
P/N AE004350 - 8" to 13" handle length

This product is optional for all ball valve sizes but necessary for all 3-Way (XPK) Ball Valves that have a 180° handle turn. We do not offer a metal bracket lock-out option for these valves at this time.

Ball Valve Actuators: MAB Series

Pneumatic and Electric

Parker MAB Series ball valves can be supplied with either pneumatic or electric operators for automated or remote operation.

Pneumatic and electric operators can be supplied with a variety of features and options. Operators are sized for each valve series to provide reliable and trouble free operation. Listed below are the operator features and available options.

Features:

Pneumatic Operators

- Air-to-open/spring-to-close (FC)
- Air-to-close/spring-to-open (FO)
- Double Acting air-to-open & close (AD) (No Spring)
- Position Indication - Standard, Limit Switches optional
- Expanded Temperature Range, -40 to 500°F with Silicone Seals available
- Standard anodized aluminum housing
- Stainless steel housing for corrosive applications available.

Limit Switch options:

- **LSM** = CSA approved Type 4X enclosure, 2 each (open/closed) 250VAC/5.6A max SPDT Mechanical relays
- **LSPX** = CSA approved Class 1, Div. 1 Grps C, D T6; ATEX Ex d IIB T6 IP66/67 Threaded Explosionproof Enclosure, 2 each SPDT Relays
- **LSXHY** = CSA approved Class 1, Div. 1 Grps B, C, D T6; ATEX Ex d IIC T6 IP66/67 Threaded Explosionproof Enclosure, 2 each SPDT Relays

- CE mark and/or SIL2 rating available.

Electric Operators

- Nema 4X Weatherproof or Nema 7X Explosionproof (ATEX/IECEx Ex d IIB T4 Gb IP67) housings available
- 24VDC, 120 or 220VAC, 50/60Hz options available
- Manual Override is standard
- Limit Switches (open/closed) provided as standard, SPDT 15 amp 250 VAC max

Ball Valve Actuators: MAB Series

Pneumatic

Air to Open/Spring to Close - Pneumatic Operated Ball Valves (90° Turn Only)

Add the suffix **-FC** (Fail Close) or **-FO** (Fail Open) to the appropriate valve catalog number for a complete valve assembly.

Valve Series = Suffix (Add only Suffix to P/N)	Dimensions Data - inches (mm)										Actuator Weight lbs.	Air Usage
	A	B	C	D	E	F	G	H	I	J		Turn Time/90°
MAB4L-FC/FO	6.85 (173.99)	3.20 (81.28)	2.50 (63.50)	1.25 (31.75)	1.00 (25.40)	0.50 (12.70)	0.28 (7.11)	1.30 (33.02)	2.50 (63.50)	1.88 (47.75)	3.94	11.2 in^2 0.5 sec.
MAB6L-FC/FO	7.28 (184.91)	3.86 (98.04)	3.00 (76.20)	1.50 (38.10)	1.50 (38.10)	0.75 (19.05)	0.34 (8.64)	1.59 (40.39)	3.00 (76.20)	2.10 (53.34)	6.0	18.1 in^2 1.0 sec.
MAB8L-FC/FO	9.38 (238.25)	4.62 (117.35)	3.00 (76.20)	1.50 (38.10)	2.00 (50.80)	1.00 (25.40)	0.53 (13.46)	2.00 (50.80)	3.00 (76.20)	2.48 (62.99)	10.7	40.6 in^2 1.0 sec
MAB12L-FC/FO	17.30 (439.42)	8.00 (203.20)	5.00 (127.00)	2.50 (63.50)	3.25 (82.55)	1.63 (41.40)	0.53 (13.46)	3.54 (89.92)	5.00 (127.00)	3.57 (90.68)	53.8	256.3 in^2 3.0 sec
MAB3XD-FC/FO	6.85 (173.99)	3.20 (81.28)	2.50 (63.50)	1.25 (31.75)	1.00 (25.40)	0.50 (12.70)	0.28 (7.11)	1.30 (33.02)	2.50 (63.50)	1.88 (47.75)	3.94	18.1 in^2 1.0 sec.
MAB6XD-FC/FO	7.28 (184.91)	3.86 (98.04)	3.00 (76.20)	1.50 (38.10)	1.50 (38.10)	0.75 (19.05)	0.34 (8.64)	1.59 (40.39)	3.00 (76.20)	2.10 (53.34)	6.0	40.6 in^2 1.5 sec.
MAB8XD-FC/FO	9.38 (238.25)	4.62 (117.35)	3.00 (76.20)	1.50 (38.10)	2.00 (50.80)	1.00 (25.40)	0.53 (13.46)	2.00 (50.80)	3.00 (76.20)	2.48 (62.99)	10.7	18.1 in^2 1.0 sec.

NOTE:

- Minimum Supply Air Pressure: 80 psi, Max 150 psi
- 1/4" NPT female air connection
- **FC**: Air to Open/Spring to Close
- **FO**: Air to Close/Spring to Open
- Actuators operating temperature: -10°F to 176°F (-23°C to 80°C)
- Extended temperature actuator option available, consult factory
- Stainless steel housing actuator models available, consult factory
- Actuators available with limit switches and visual indicators.
- Epoxy coated housing available, consult factory.
- Corrosion resistant anodized aluminum housing as standard

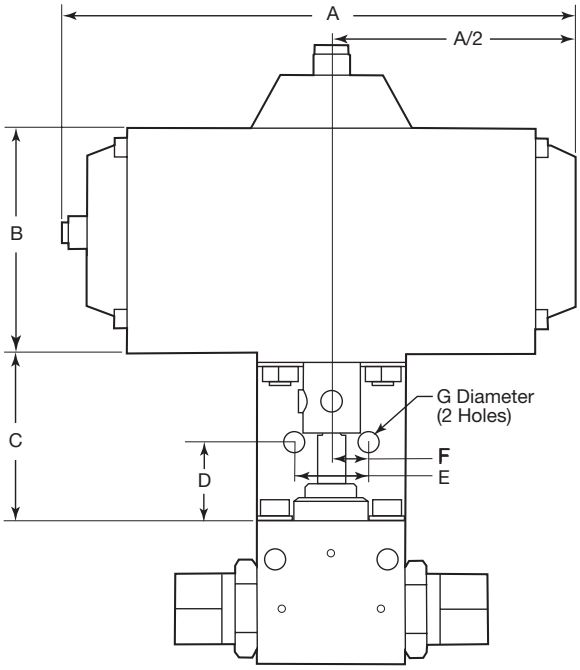

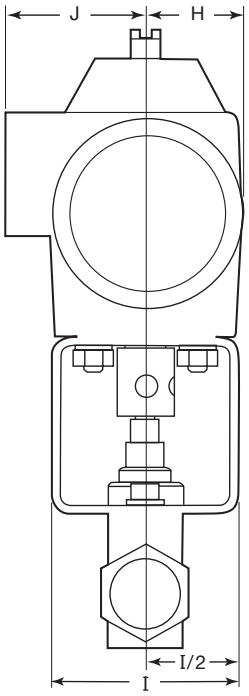

Ball Valve Actuators: MAB Series

Pneumatic

Air to Open and Close - Pneumatic Operated Ball Valves (90° and 180° Turn - no middle stop)

Add the suffix **-AD** to the appropriate valve catalog number for a complete valve assembly.

Valve Series = Suffix (Add only Suffix to P/N)	Dimensions Data - inches (mm)										Actuator Weight lbs.	Air Usage
	A	B	C	D	E	F	G	H	I	J		Turn Time/90°
MAB4L-AD	6.85 (173.99)	3.20 (81.28)	2.50 (63.50)	1.25 (31.75)	1.00 (25.40)	0.50 (12.70)	0.28 (7.11)	1.30 (33.02)	2.50 (63.50)	1.88 (47.75)	3.52	25.6 in² / 0.5 sec.
MAB6L-AD	6.85 (173.99)	3.20 (81.28)	3.00 (76.20)	1.50 (38.10)	1.50 (38.10)	0.75 (19.05)	0.34 (8.64)	1.30 (33.02)	3.00 (76.20)	1.88 (47.75)	5.17	44.4 in² / 0.5 sec.
MAB8L-AD	7.28 (184.91)	3.86 (98.04)	3.00 (76.20)	1.50 (38.10)	2.00 (50.80)	1.00 (25.40)	0.53 (13.46)	1.59 (40.39)	3.00 (76.20)	2.10 (53.34)	9.13	88.9 in² / 1.0 sec.
MAB12L-AD	11.82 (300.23)	6.10 (154.94)	5.00 (127.00)	2.50 (63.50)	3.25 (82.55)	1.63 (41.40)	0.53 (13.46)	2.55 (64.77)	5.00 (127.00)	2.55 (64.77)	44.1	565.5 in² / 2.5 sec.
MAB3X-AD	9.50 (241.30)	3.59 (91.19)	2.50 (63.50)	1.25 (31.75)	1.00 (25.40)	0.50 (12.70)	0.28 (7.11)	1.37 (34.80)	2.50 (63.50)	1.99 (50.55)	3.52	42.5 in² / 2.5 sec.
MAB6X-AD	9.50 (241.30)	3.59 (91.19)	3.00 (76.20)	1.50 (38.10)	1.50 (38.10)	0.75 (19.05)	0.34 (8.64)	1.37 (34.80)	3.00 (76.20)	1.99 (50.55)	5.17	77.3 in² / 1.0 sec.
MAB8X-AD	10.21 (259.33)	4.47 (113.54)	3.00 (76.20)	1.50 (38.10)	2.00 (50.80)	1.00 (25.40)	0.53 (13.46)	1.67 (42.42)	3.00 (76.20)	2.10 (53.34)	9.13	150.0 in² / 2.0 sec.
MAB3XD-AD	6.85 (173.99)	3.20 (81.28)	2.50 (63.50)	1.25 (31.75)	1.00 (25.40)	0.50 (12.70)	0.28 (7.11)	1.30 (33.02)	2.50 (63.50)	1.88 (47.75)	3.53	25.6 in² / 0.5 sec.
MAB6XD-AD	6.85 (173.99)	3.20 (81.28)	3.00 (76.20)	1.50 (38.10)	1.50 (38.10)	0.75 (19.05)	0.34 (8.64)	1.30 (33.02)	3.00 (76.20)	1.88 (47.75)	5.17	44.4 in² / 0.5 sec.
MAB8XD-AD	7.28 (184.91)	3.86 (98.04)	3.00 (76.20)	1.50 (38.10)	2.00 (50.80)	1.00 (25.40)	0.53 (13.46)	1.59 (40.39)	3.00 (76.20)	2.10 (53.34)	9.13	88.9 in² / 1.0 sec.

NOTE:

- Minimum Supply Air Pressure: 80 psi, Max 150 psi
- 1/4" NPT female air connection
- **FC**: Air to Open/Spring to Close
- **FO**: Air to Close/Spring to Open
- Actuators operating temperature: -10°F to 176°F (-23°C to 80°C)
- Extended temperature actuator option available, consult factory
- Stainless steel housing actuator models available, consult factory
- Actuators available with limit switches and visual indicators.
- Epoxy coated housing available, consult factory.
- Corrosion resistant anodized aluminum housing as standard

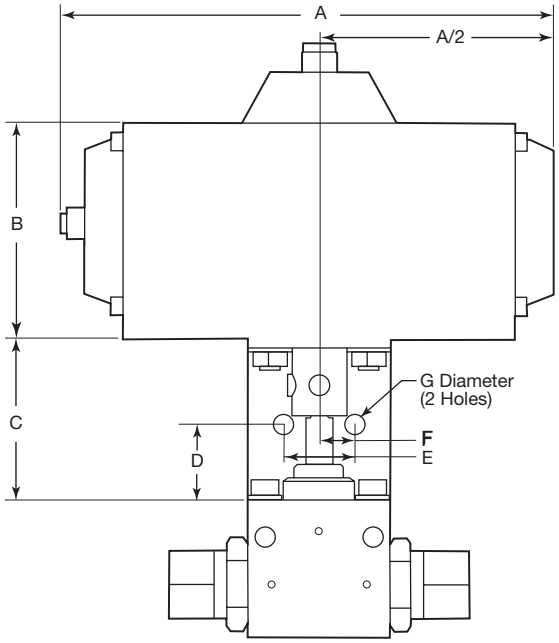

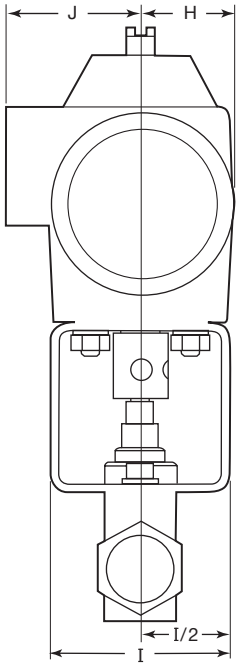

Ball Valve Actuators: MAB Series

Electric

3/16" to 3/8" - Electric Operated Ball Valves, Weather Proof NEMA 4x (90° Turn Only)

Add the suffix **-EO1**, **-EO2** or **-EO3** to the appropriate valve catalog number for a complete valve assembly.

Valve Series = Suffix (Add only Suffix to P/N)	Dimensions Data - inches (mm)						No Load Time OPEN/CLOSE Seconds/90°	VOLTAGE
	A	B	C	D	E	F		
MAB4L-EO1	2.50 (63.50)	1.25 (31.75)	1.00 (25.4)	0.50 (12.70)	0.28 (7.11)	2.50 (63.50)	3	120 VAC
MAB4L-EO2							3	240 VAC
MAB4L-EO3							3	24 VDC
MAB6L-EO1	3.00 (76.2)	1.50 (38.1)	1.50 (38.1)	0.75 (19.05)	0.34 (8.64)	3.00 (76.2)	7	120 VAC
MAB6L-EO2							7	240 VAC
MAB6L-EO3							5	24 VDC
MAB3X-EO1	2.50 (63.50)	1.25 (31.75)	1.00 (25.4)	0.50 (12.70)	0.28 (7.11)	2.50 (63.50)	3	120 VAC
MAB3X-EO2							3	240 VAC
MAB6X-EO1	3.00 (76.2)	1.50 (38.1)	1.50 (38.1)	0.75 (19.05)	0.34 (8.64)	3.00 (76.2)	7	120 VAC
MAB6X-EO2							7	240 VAC
MAB3XD-EO1	2.50 (63.50)	1.25 (31.75)	1.00 (25.4)	0.50 (12.70)	0.28 (7.11)	2.50 (63.50)	3	120 VAC
MAB3XD-EO2							3	240 VAC
MAB3XD-EO3							3	24 VDC
MAB6XD-EO1	3.00 (76.2)	1.50 (38.1)	1.50 (38.1)	0.75 (19.05)	0.34 (8.64)	3.00 (76.2)	7	120 VAC
MAB6XD-EO2							7	240 VAC
MAB6XD-EO3							5	24 VDC

NOTE:

- **EO1**: Electric 120 VAC
- **EO2**: Electric 240 VAC
- **EO3**: Electric 24 VDC
- Actuator operating temperature: 0°F to 160°F (-18°C to 71°C)
- Polyester Powder Coated aluminum cover and base
- CE & CSA approved for NEMA 4 and 4x
- Manual override
- Limit Switches (Open/Closed) Included; 2 each SPDT Form C 15 amp
- 1/2" NPT female conduit connection
- If Valve Series/Suffix not shown, option is not available for that configuration.
- No Spring Return on Power Loss

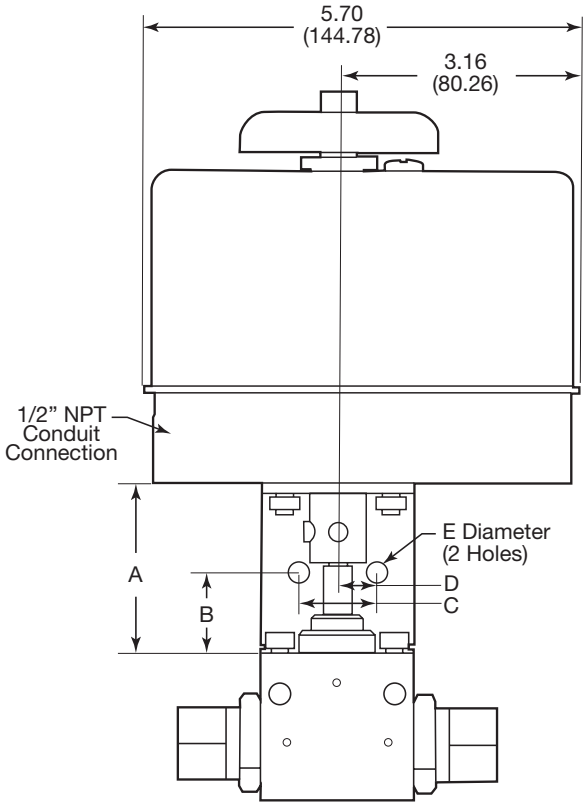

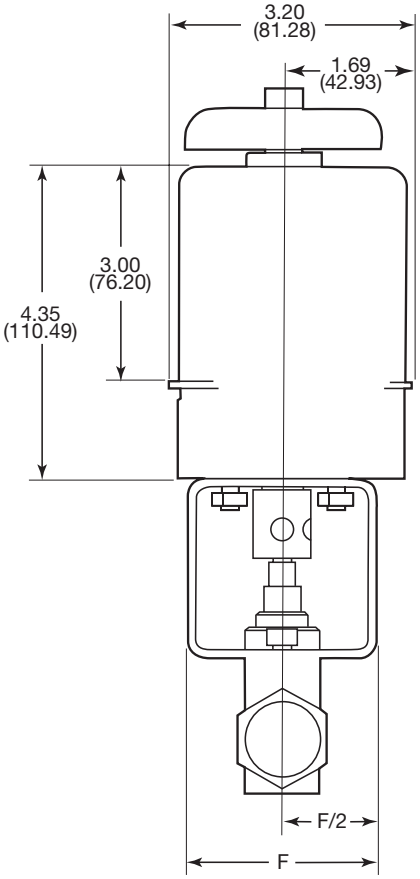

Ball Valve Actuators: MAB Series

Electric

1/2" - Electric Operated Ball Valves, Weather Proof NEMA 4x (90° Turn Only)

Add the suffix **-EO1**, **-EO2** or **-EO3** to the appropriate valve catalog number for a complete valve assembly.

Valve Series = Suffix (Add only Suffix to P/N)	Dimensions Data - inches (mm)						No Load Time OPEN/CLOSE Seconds/90°	VOLTAGE
	A	B	C	D	E	F		
MAB8L-EO1	3.00 (76.2)	1.50 (38.1)	2.00 (50.8)	1.00 (25.40)	0.53 (13.46)	3.00 (76.2)	5	120 VAC
MAB8L-EO2							5	240 VAC
MAB8L-EO3							5	24 VDC
MAB8X-EO1	3.00 (76.2)	1.50 (38.1)	2.00 (50.80)	1.00 (25.40)	0.53 (13.46)	3.00 (76.2)	5	120 VAC
MAB8X-EO2							5	240 VAC
MAB8XD-EO1	3.00 (76.2)	1.50 (38.1)	2.00 (50.80)	1.00 (25.40)	0.53 (13.46)	3.00 (76.2)	5	120 VAC
MAB8XD-EO2							5	240 VAC
MAB8XD-EO3							5	24 VDC

NOTE:

- **EO1**: Electric 120 VAC
- **EO2**: Electric 240 VAC
- **EO3**: Electric 24 VDC
- Actuator operating temperature: 0°F to 160°F (-18°C to 71°C)
- Polyester Powder Coated aluminum cover and base
- CE & CSA approved for NEMA 4 and 4x
- Manual override
- Limit Switches (Open/Closed) Included; 2 each SPDT Form C 15 amp
- 1/2" NPT female conduit connection
- If Valve Series/Suffix not shown, option is not available for that configuration.
- No Spring Return on Power Loss

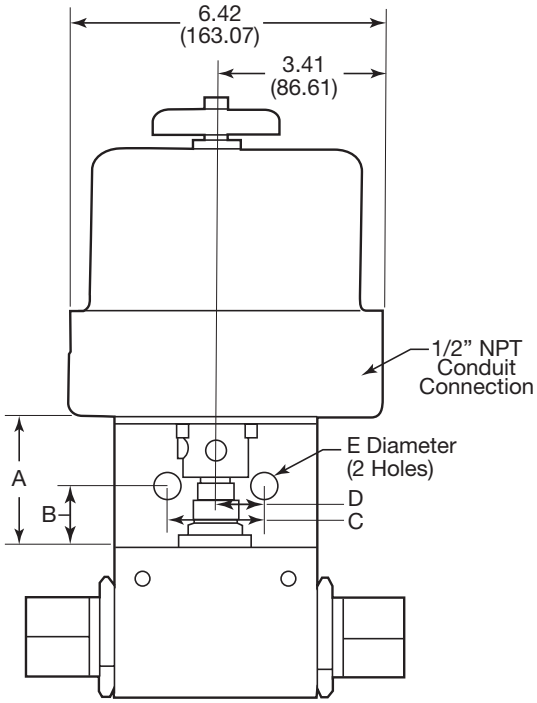

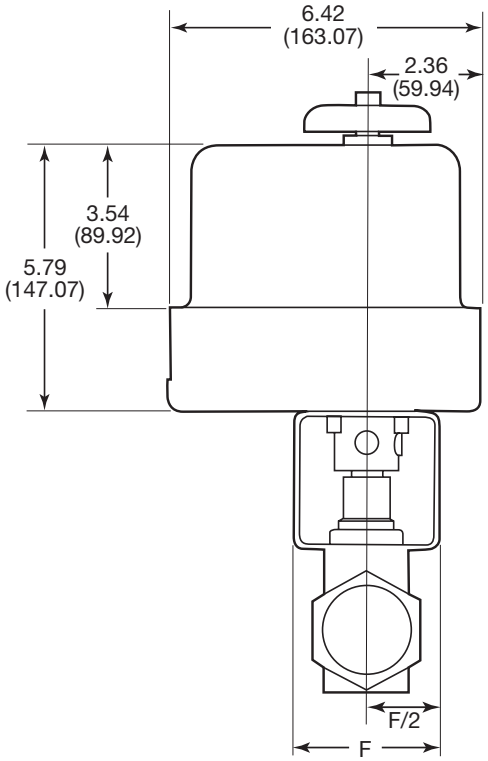

Ball Valve Actuators: MAB Series

Electric

3/4" - Electric Operated Ball Valves, Weather Proof NEMA 4x (90° Turn Only)

Add the suffix **-EO1** or **-EO2** to the appropriate valve catalog number for a complete valve assembly.

Valve Series = Suffix (Add only Suffix to P/N)	Dimensions Data - inches (mm)						No Load Time OPEN/CLOSE Seconds/90°	VOLTAGE
	A	B	C	D	E	F		
MAB12L-EO1	5.00 (127.00)	2.50 (63.50)	3.25 (82.55)	1.63 (41.40)	0.53 (13.46)	5.00 (127.00)	8.5	120 VAC
MAB12L-EO2							8.5	240 VAC

NOTE:

- **EO1**: Electric 120 VAC
- **EO2**: Electric 240 VAC
- **EO3**: Electric 24 VDC
- Actuator operating temperature: 0°F to 160°F (-18°C to 71°C)
- Polyester Powder Coated aluminum cover and base
- CE & CSA approved for NEMA 4 and 4x
- Limit Switches (Open/Closed) Included; 2 each SPDT 16 amp
- Manual override
- 1/2" NPT female conduit connection
- If Valve Series/Suffix not shown, option is not available for that configuration.
- No Spring Return on Power Loss

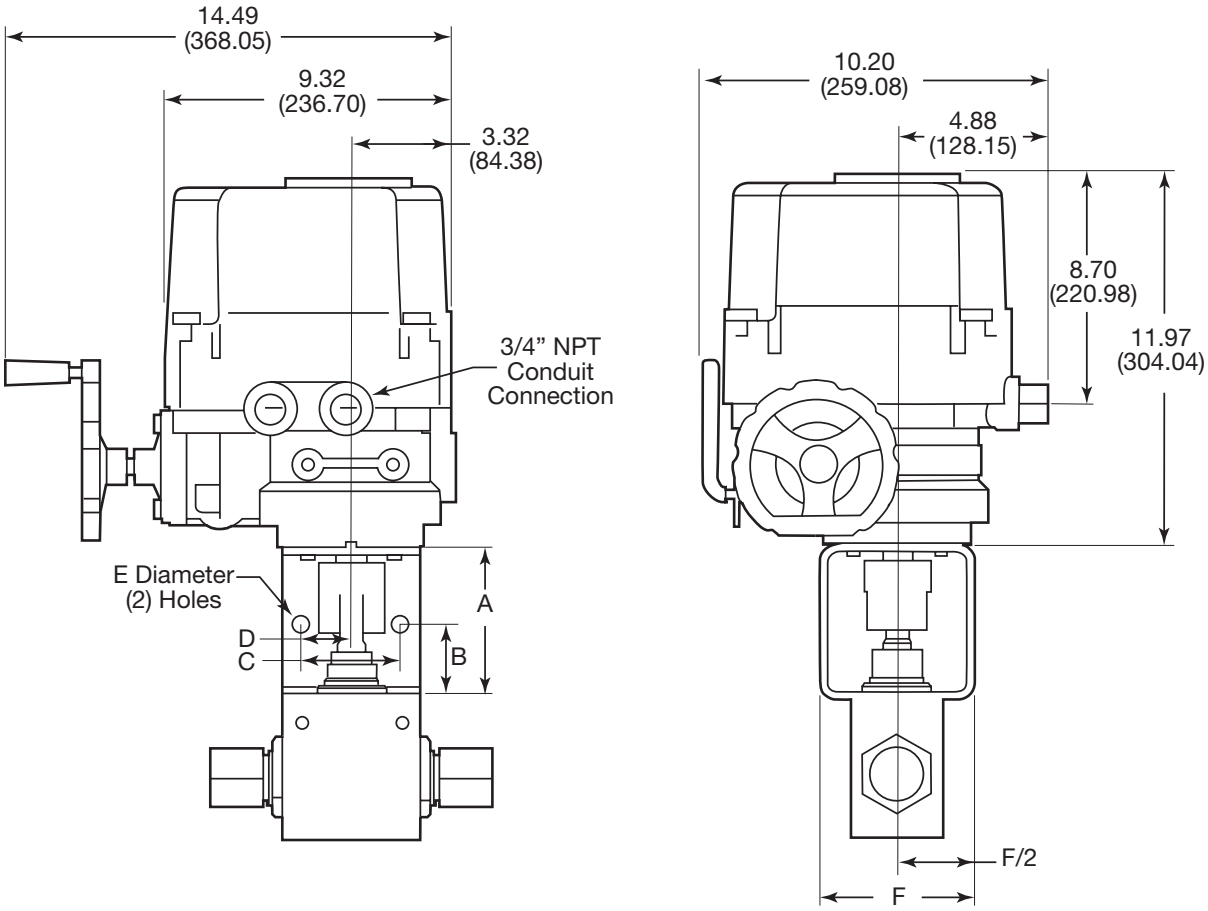

Ball Valve Actuators: MAB Series

Electric

3/16" to 3/8" - Electric Explosion Proof Operated Ball Valves (90° Turn Only)

Add the suffix **-EO1X**, **-EO2X** or **-EO3X** to the appropriate valve catalog number for a complete valve assembly.

Valve Series = Suffix (Add only Suffix to P/N)	Dimensions Data - inches (mm)						No Load Time OPEN/ CLOSE Seconds/90°	VOLTAGE
	A	B	C	D	E	F		
MAB4L-EO1X	3.00 (76.2)	1.50 (38.1)	1.00 (25.40)	0.50 (12.70)	0.28 (7.11)	3.00 (76.2)	7	120 VAC
MAB4L-EO2X							7	240 VAC
MAB4L-EO3X							7	24 VDC
MAB6L-EO1X	3.00 (76.2)	1.50 (38.1)	1.50 (38.1)	0.75 (19.05)	0.34 (8.64)	3.00 (76.2)	7	120 VAC
MAB6L-EO2X							7	240 VAC
MAB6L-EO3X							7	24 VDC
MAB3XD-EO1X	3.00 (76.2)	1.50 (38.1)	1.00 (25.40)	0.50 (12.70)	0.28 (7.11)	3.00 (76.2)	7	120 VAC
MAB3XD-EO2X							7	240 VAC
MAB3XD-EO3X							7	24 VDC
MAB6XD-EO1X	3.00 (76.2)	1.50 (38.1)	1.50 (38.1)	0.75 (19.05)	0.34 (8.64)	3.00 (76.2)	7	120 VAC
MAB6XD-EO2X							7	240 VAC
MAB6XD-EO3X							7	24 VDC

NOTE:

- **EO1X**: Electric 120 VAC
- **EO2X**: Electric 240 VAC
- **EO3X**: Electric 24 VDC
- Actuator operating temperature: -4°F to 158°F (-20°C to 70°C)
- Powder coated aluminum housing
- Limit Switches (Open/Closed) Included; 2 each SPDT 16 amp
- Manual override
- 3/4" NPT female conduit connection
- Explosion proof enclosure II 2 G, EEx-d IIB T4, IP67, ATEX Approved
- Designed to comply with NEMA 7 Explosion Proof
- For other options consult factory
- No Spring Return on Power Loss

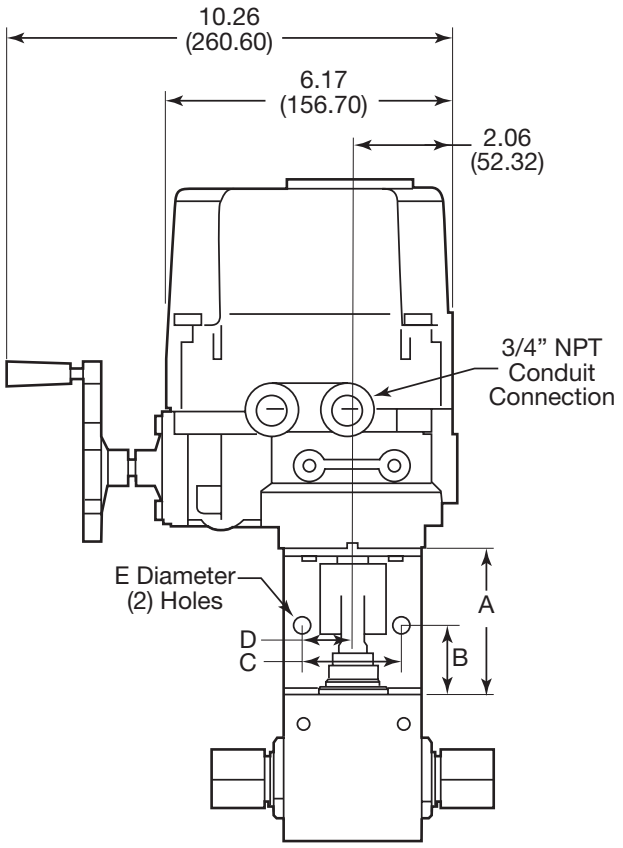

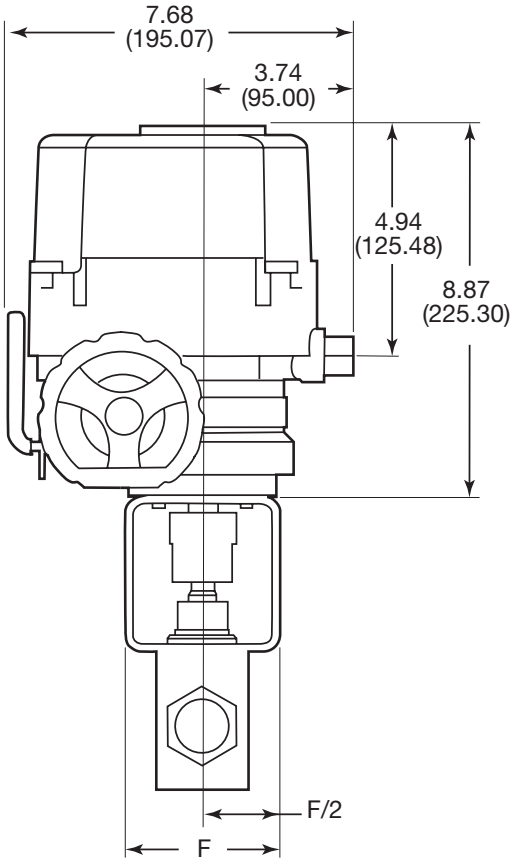

Ball Valve Actuators: MAB Series

Electric

1/2" - Electric Explosion Proof Operated Ball Valves (90° Turn only)

Add the suffix **-EO1X**, **-EO2X** or **-EO3X** to the appropriate valve catalog number for a complete valve assembly.

Valve Series = Suffix (Add only Suffix to P/N)	Dimensions Data - inches (mm)						No Load Time OPEN/ CLOSE Seconds/90°	VOLTAGE
	A	B	C	D	E	F		
MAB8L-EO1X	3.00 (76.2)	1.50 (38.1)	2.00 (50.8)	1.00 (25.40)	0.56 (14.22)	3.00 (76.2)	7	120 VAC
MAB8L-EO2X							7	240 VAC
MAB8L-EO3X							7	24 VDC
MAB8XD-EO1X	3.00 (76.2)	1.50 (38.1)	2.00 (50.80)	1.00 (25.40)	0.56 (14.22)	3.00 (76.2)	7	120 VAC
MAB8XD-EO2X							7	240 VAC
MAB8XD-EO3X							7	24 VDC

NOTE:

- **EO1X**: Electric 120 VAC
- **EO2X**: Electric 240 VAC
- **EO3X**: Electric 24 VDC
- Actuator operating temperature: -4°F to 158°F (-20°C to 70°C)
- Powder coated aluminum housing
- Limit Switches (Open/Closed) Included; 2 each SPDT 16 amp
- Manual override
- 3/4" NPT female conduit connection
- Explosion proof enclosure II 2 G, EEx-d IIB T4, IP67, ATEX Approved
- Designed to comply with NEMA 7 Explosion Proof
- For other options consult factory
- No Spring Return on Power Loss

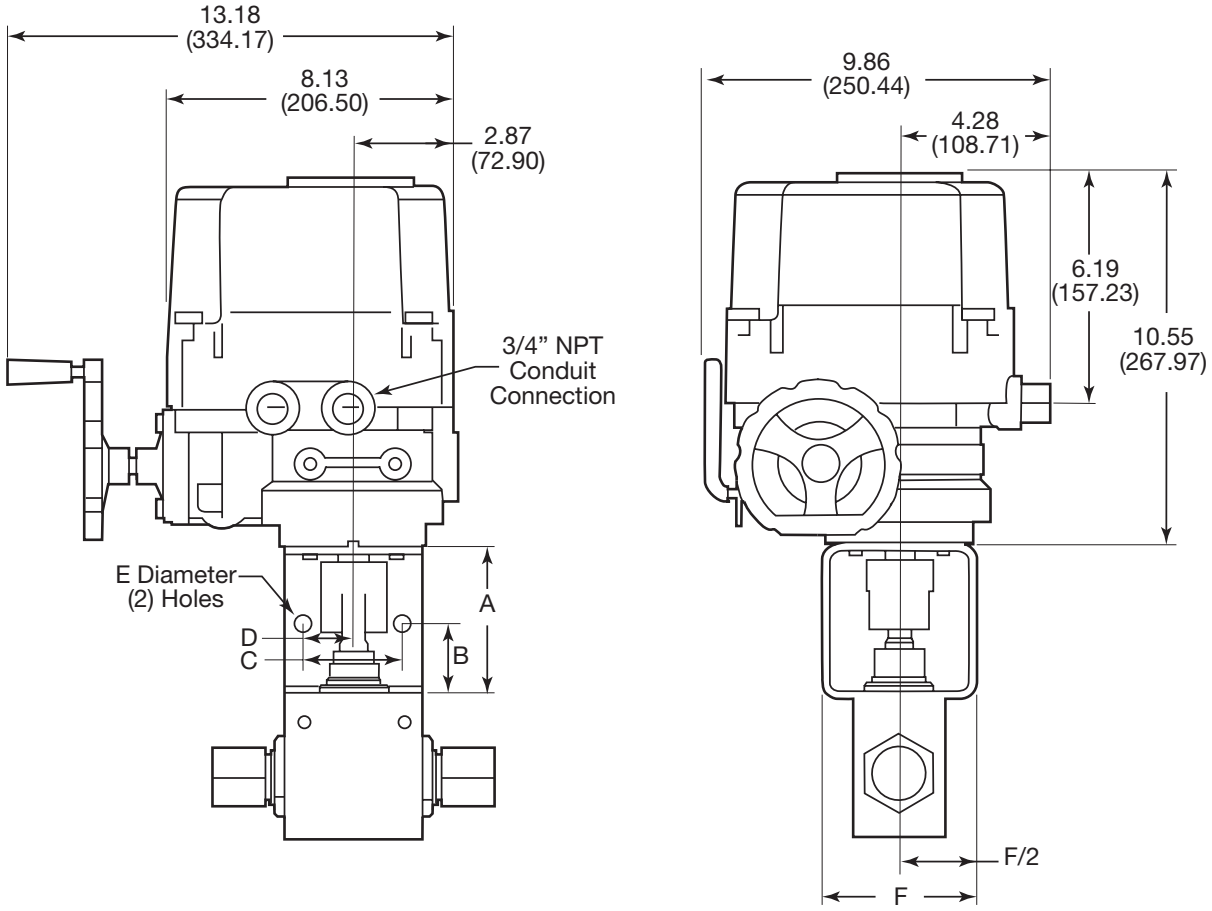

Ball Valves: MAB Series Actuators

Electric

3/4" - Electric Explosion Proof Operated Ball Valves

Add the suffix **-EO1X** or **-EO2X** to the appropriate valve catalog number for a complete valve assembly.

Valve Series = Suffix (Add only Suffix to P/N)	Dimensions Data - inches (mm)						No Load Time OPEN/CLOSE Seconds/90°	VOLTAGE
	A	B	C	D	E	F		
MAB12L-EO1X	5.00 (127.00)	2.50 (63.50)	3.25 (82.55)	1.63 (41.40)	0.53 (13.46)	5.00 (127.00)	8.5	120 VAC
MAB12L-EO2X							8.5	240 VAC

NOTE:

- **EO1X**: Electric 120 VAC
- **EO2X**: Electric 240 VAC
- Actuator operating temperature: -4°F to 158°F (-20°C to 70°C)
- Powder coated aluminum housing
- Limit Switches (Open/Closed) Included; 2 each SPDT 16 amp
- Manual override
- 3/4" NPT female conduit connection
- Explosion proof enclosure II 2 G, EEx-d IIB T4, IP67, ATEX Approved
- Designed to comply with NEMA 7 Explosion Proof
- For other options consult factory
- No Spring Return on Power Loss

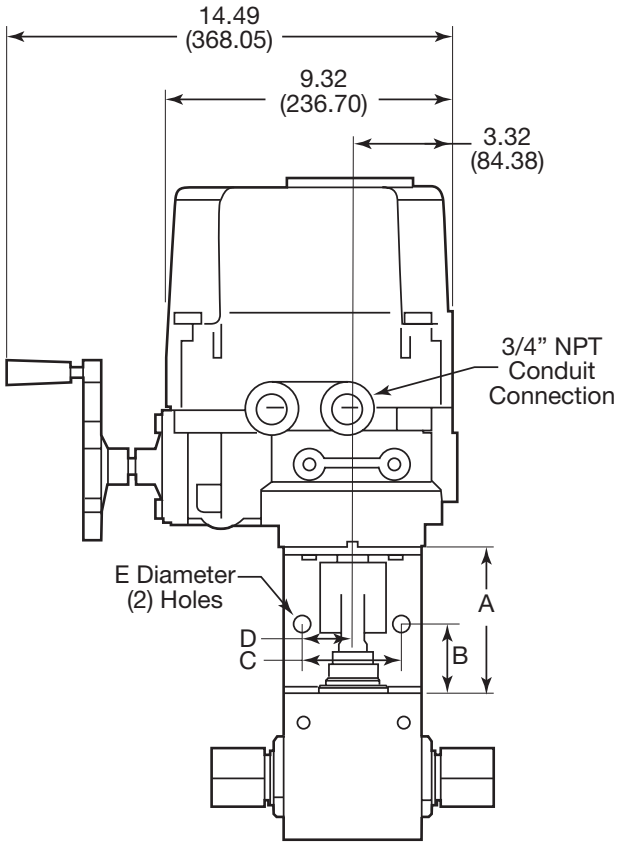

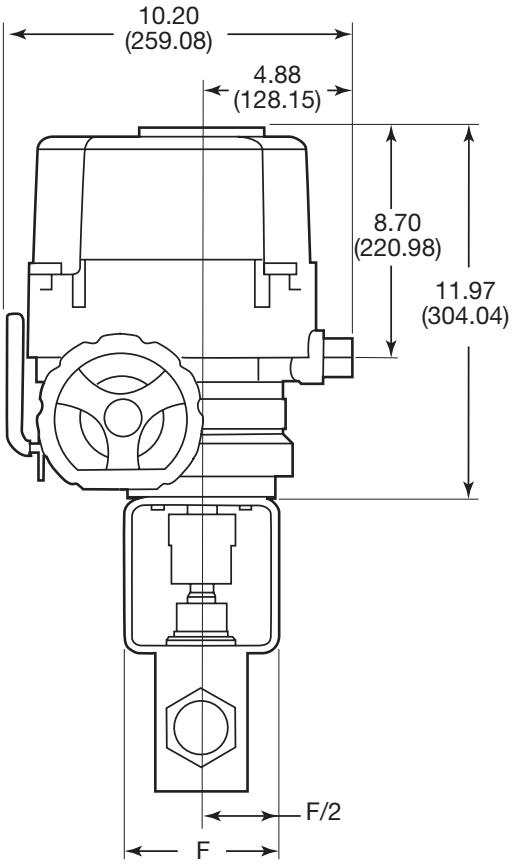

MPI™ MADBB Double Block & Bleed Ball Valves

3/8" & 5/8" Bore to 15,000 psi (or to 20,000 psi in 2507 Super Duplex only)

Parker MPI™ MADBB Double Block & Bleed valve is a two-stem ball valve with needle style vent valve providing economical and reliable isolation in critical areas superior in comparison to a standard, single valve. Designed for use where critical isolation is needed to ensure that leakage does not occur.

The MADBB6 3/8" bore and MADBB10 5/8" bore valve is designed as standard for 15,000 psi but is also available for pressures to 20,000 (**-IX** option) psi using 2507 Super Duplex material only. These ball valves can also be modified to incorporate the use of special materials, optional seals with and capability for temperature ranges from -50˚F(-46˚C) to 500˚F (260˚C).

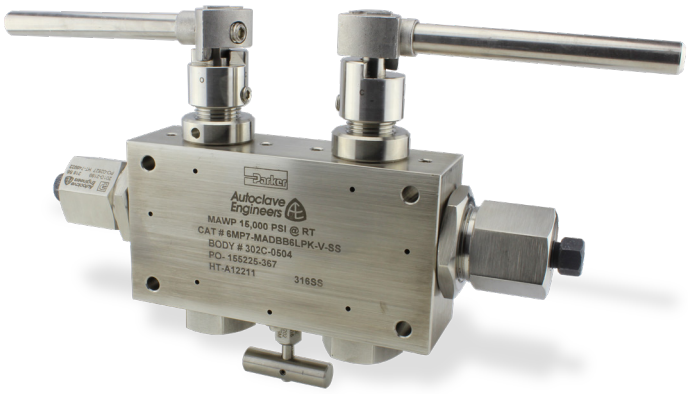

Double Block & Bleed Ball Valve Features

- One-piece, trunnion mounted style, stem design eliminates shear failure and reduces the effects of side loading found in two piece designs
- Re-torqueable seat glands for longer seat life
- Carbon filled PEEK seats offer excellent resistance to chemicals, heat, and wear/abrasion
- Vee-Stem Needle Vent Valve with PTFE Packing
- Full-port flow path minimizes pressure drop
- Manufactured using UNS S31600 316 cold worked Stainless Steel
- Low friction pressure assisted graphite filled PTFE stem seal increases cycle life and reduces operating torque
- FKM o-rings for operation from 0˚ to 400˚F (-18 to 204˚C) are standard

MADBB Double Block and Bleed Ball Valves

Orifice Size	Part Number	Max Pressure PSIG	Connection	Inches Minimum Valve Orifice	C_V
3/8"	4MP7-MADBB6LPK-V-SS	15K/20 ksi*	1/4" MPI™	0.125	.34
	6MP7-MADBB6LPK-V-SS	15K/20 ksi*	3/8" MPI™	0.250	1.8
	8MP7-MADBB6LPK-V-SS	15K/20 ksi*	1/2" MPI™	0.312	2.1
	9MP7-MADBB6LPK-V-SS	15K/20 ksi*	9/16" MPI™	0.375	2.4
5/8"	12MP7-MADBB10LPK-V-SS	15K/20 ksi*	3/4" MPI™	0.531	6.4
	16MP7-MADBB10LPK-V-SS	15K/20 ksi*	1" MPI™	0.625	8.1

For 2507 Super Duplex option, replace **-SS** with **-2507**

9/16" MPI™ size not available in 2507 Super Duplex (1/2" MPI™ size only). **Note:** MADBB Valves cannot be repaired in field and as such, no repair kits are identified

All vent connections are sized at 1/4" FNPT. Other vent connections are available upon request.

-XF extra strong ferrule option required for sizes 12 & 16 for pressures over 10,000 psi and for use with all 2507 Super Duplex Tubing

-IX 20,000 psi option is only available using 2507 Super Duplex Material. O-ring options are same as with 2-Way and 3-Way ball valves - see page 80 for detail

Material of Construction

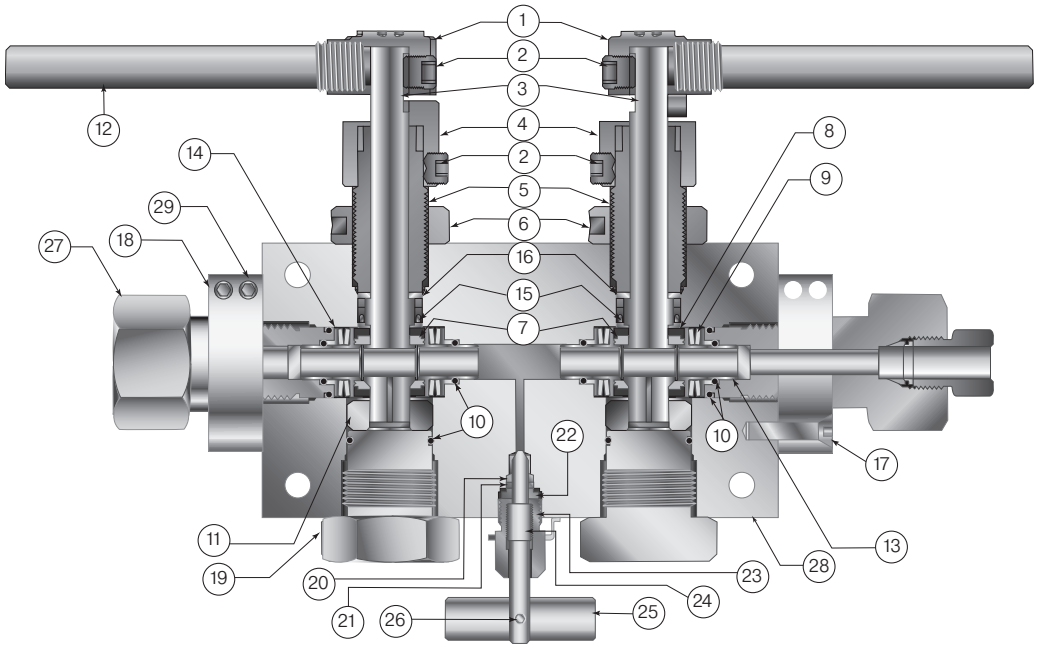

Item#	Description	Material
1	Handle Hub	316 SS
2	Set Screw	Stainless
3	One piece Ball and Stem	316 CW SS
4	Stopping Device	316 SS
5	Packing Gland	316 CW SS
6	Locking Piece	316 SS
7	Seat	Carbon Filled Peek
8	Seat Retainer	15-5 PH SS
9	Belleville Washer	17-7 PH
10	O-Ring	Viton
11	Bottom Bearing	Peek
12	Handle	304 SS
13	Stress Riser Backup	15-5 PH SS
14	Belleville Washer Backup	316 CW SS
15	Spring Energized Seal	Graphite/Carbon PTFE

Item#	Description	Material
16	Thrust Washer	Ampco 45
17	Screw	316 SS
18	Locking Device	316 SS
19	Bottom Gland	316 CW SS
20	Bottom Washer	316 SS
21	Packing	PTFE
22	Packing Washer	Ampco 45
23	Packing Gland	316 SS
24	Stem	316 SS
25	Handle	316 SS
26	Spring Pin	18-8 SS
27	Seat Gland	316 CW SS
28	Body	316 SS
29	Screw	316 SS

Note: MADBB Valves cannot be repaired in field and as such, no repair kits are identified

Dimensions

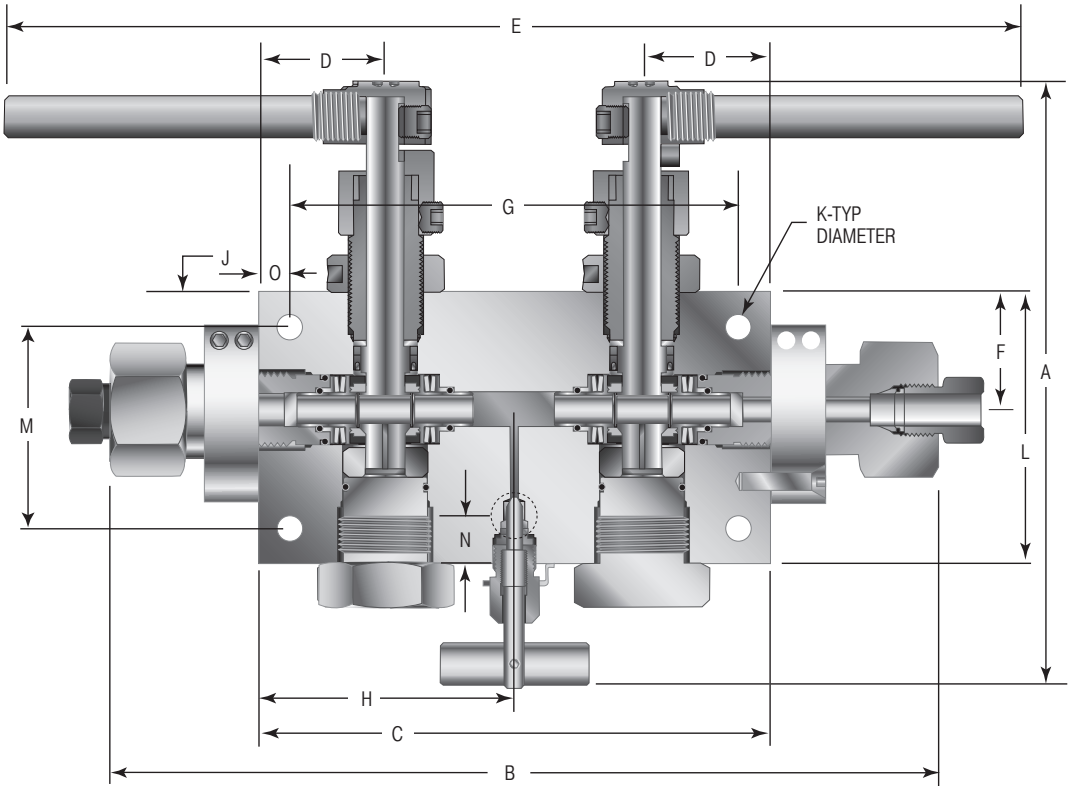

Orifice Size	Inches (mm)														
	A	B	C	D	E	F	G	H	J	K	L	M	N Vent Connection	O	Block Th'k
3/8"	7.14 (181.35)	11.17 (283.83)	6.00 (152.44)	1.50 (38.10)	12.98 (329.69)	1.38 (35.11)	5.00 (127.00)	3.00 (76.20)	0.41 (10.41)	0.28 (7.11)	3.19 (81.15)	2.38 (60.55)	0.65 (16.54)	0.50 (12.83)	1.75 (44.45)
3/8" (2507-IX)	7.14 (181.35)	11.17 (283.83)	6.00 (152.44)	1.50 (38.10)	12.98 (329.69)	1.38 (35.11)	5.00 (127.00)	3.00 (76.20)	0.41 (10.41)	0.28 (7.11)	3.19 (81.15)	2.38 (60.55)	0.65 (16.54)	0.50 (12.83)	2.25 (57.15)
5/8"	13.02 (330.71)	15.40 (391.16)	10.50 (266.70)	2.66 (67.67)	27.45 (697.23)	2.53 (64.36)	8.69 (220.73)	5.25 (133.35)	0.83 (18.32)	0.41 (10.41)	5.25 (133.35)	3.81 (96.93)	1.75 (44.45)	0.91 (23.11)	3.00 (76.20)
5/8" (2507-IX)	13.02 (330.71)	15.40 (391.16)	10.50 (266.70)	2.66 (67.67)	27.45 (697.23)	2.53 (64.36)	8.69 (220.73)	5.25 (133.35)	0.72 (18.30)	0.41 (10.41)	5.25 (133.35)	3.81 (96.93)	1.75 (44.45)	0.91 (23.11)	3.50 (89.0)

Panel Hole Sizes

DBB6 Panel Hole Size

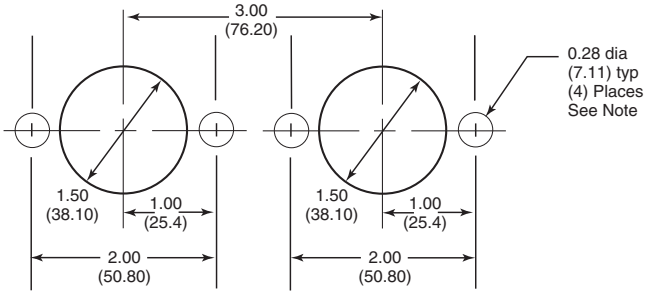

All dimensions are for reference only and are subject to change without notice.

Note: Body Top Mount 1/4-20 Thread

DBB10 Panel Hole Size

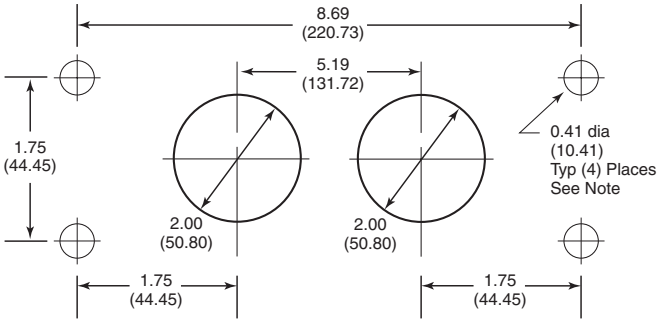

All dimensions are for reference only and are subject to change without notice.

Note: Body Top Mount 3/8-16 Thread

How to Order MADBB Series Ball Valves

The correct part number is easily derived from the following example and ordering chart. The nine product characteristics required are coded as shown in the chart.

Typical part number example: **4MP7-MADBB6LPK-V-SS-LD** (part number is created based on customer selection of product parameters, see below for example)

4	MP7	-	MADBB	6	L	PK	-	V	-	SS	-	LD
Inlet/Outlet Connection Size	Connection Type		Valve Series	Orifice Size	Valve Type	Seat Material		Seal Material		Body Material		Options
4 1/4" **6** 3/8" **8** 1/2" **9** 9/16" **12** 3/4" **16** 1"	**MP7** Parker MPI™		**MADBB**	**6** 3/8" **10** 5/8"	**L** 2-Way	**PK** PEEK		**V***** Fluorocarbon Rubber **KZ** FFKM Highly Fluorinated Fluorocarbon Rubber **BN** Nitrile Rubber **EPR** Ethylene Propylene Rubber		**SS** Stainless Steel ***2507** Super Duplex *9/16" MPI™ size not available in 2507 Super Duplex (1/2" MPI™ size only)		**LD** Lock Out Device **HYG** Required for Hydrogen or Helium Service **XF** High Strength Ferrules **NC** NACE Certified **IX** Required for max pressure of 20 ksi (2507 Super Duplex ONLY)

*** Standard o-ring material

-XF ferrules required for sizes 12 & 16 for pressures over 10,000 psi or for all 2507 Super Duplex Tubing
-IX 20,000 psi option only available made with 2507 Super Duplex material

Options

Standard valve has Fluorocarbon Rubber O-rings (**-V**) [0° to 400°F (-18° to 204°C)]

KZ - Standard valve with FFKM Highly Fluorinated Fluorocarbon Rubber o-rings [30°F to 500°F (0° to 260°C).

BN - Standard valve with Buna-N (Nitrile) Rubber o-rings [-40° to 225°F (-40° to 121°C)].

EPR - Standard valve with Ethylene Propylene Rubber o-rings [-50° to 250°F (-46° to 121°C). (use with **-HYG** option)

LD - Standard valve with factory-installed lock out device.

NC - NACE/ISO 15156 materials and hardness verification - Certificate generated.

HYG - High Cycle Gaseous Hydrogen/Helium modification - Required for use with this media.

MAF Series Dual Disc Line Filter

Parker's MAF Series Dual-Disc Line Filters are utilized in numerous industrial, chemical processing, aerospace, nuclear and other applications. With the dual-disc design, large contaminant particles are trapped by the upstream filter element before they can reach and clog the smaller micron-size downstream element. Filter elements can be easily replaced.

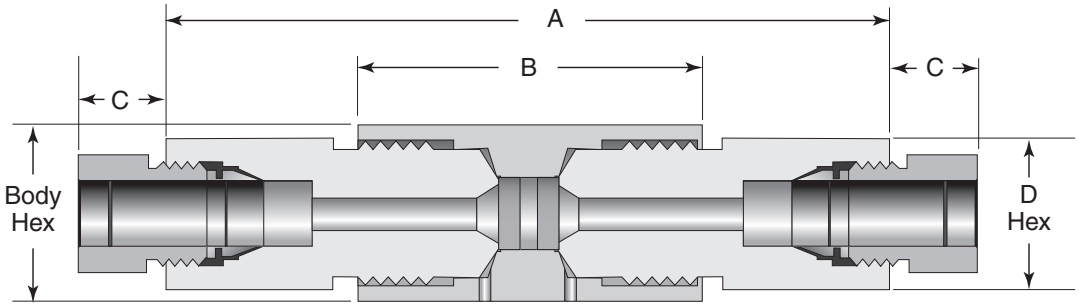

Tubing	Parker Part No.**	Pressure psi	Orifice inch (mm)	Micron Size	Replacement Filter P/N	Dimensions - inches (mm) A	B	C	D	Hex	Cover Gland Torque
1/2" O.D.	8MP7-MAFL-35/65-SS	15,000 psi or 20,000 psi w/-**IX** option	0.250 (6.35)	35/65	P-0794/P-0764	5.99 (152.15)	2.69 (68.33)	.69 (17.53)	1.19 (30.23)	1.38 (35.05)	140 Ft-lbs
	8MP7-MAFL-5/10-SS			5/10	P-1783/P-1784						
	8MP7-MAFL-10/35-SS			10/35	P-1784/P-0794						
9/16" O.D.	9MP7-MAFL-35/65-SS		0.250 (6.35)	35/65	P-0794/P-0764	5.99 (152.15)	2.69 (68.33)	.75 (19.05)	1.19 (30.23)	1.38 (35.05)	140 Ft-lbs
	9MP7-MAFL-5/10-SS			5/10	P-1783/P-1784						
	9MP7-MAFL-10/35-SS			10/35	P-1784/P-0794						

** Filter elements downstream/upstream micron size 35/65 is standard.

For 2507 Super Duplex option, replace **-SS** with **-2507** (does not change filter screen material which is 316 SS)

9/16" MPI™ size not available in 2507 Super Duplex (1/2" MPI™ size only)\

-IX suffix is required to change rated working pressure to 20 ksi MAWP (per ASME 31.3 Chapter IX)

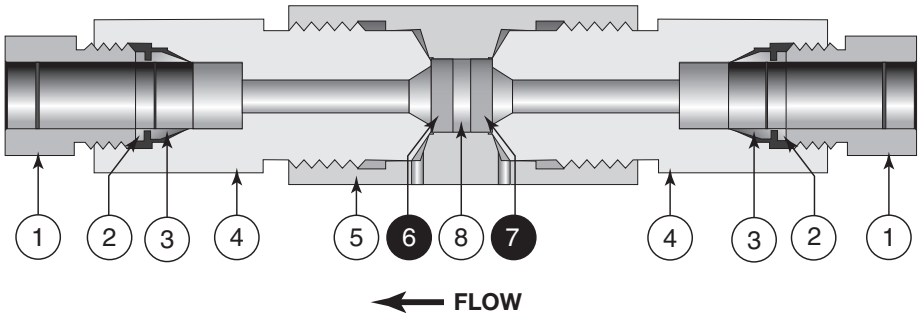

Material of Construction

Item#	Part	Material
1	Nut	316 SS
2	Back Ferrule	316 SS
3	Front Ferrule	316 SS
4	Gland Nut	316 SS
5	Body	316 SS
❻	Dual Disc Line Filter 35 Microns*	316 L
❼	Dual Disc Line Filter 65 Microns*	316 L
8	Filter Gasket	316 SS

NOTES:

(1) All filters furnished complete with connection components unless otherwise specified. All dimensions for reference only and subject to change.

(2) Parker Autoclave Engineers disc filters are designed to filter small amounts of process particles. It is recommended that all fluids are thoroughly cleaned prior to entering the higher pressure system.

(3) 2507 Super Duplex filters may be supplied with four flats in place of standard hex. Filter media is 316 SS.

(4) Pressure differential not to exceed 1,000 psi (69 bar) in a flowing condition.

(5) Larger micron size filter element is installed on the upstream (inlet) side.

* Per Model Number

❶ Typical spare parts found in Repair Kit (part number found in Replacement Filter chart above).

MAFC Series Cup Line Filter

Parker's MAFC Series high flow Cup Line Filters are recommended in high pressure systems requiring both high flow rates and maximum filter surface area. Widely used in the industrial and chemical processing fields, the cup design offers as much as six times the effective filter area as compared to disc-type units. In addition, the filter elements can be quickly and easily replaced.

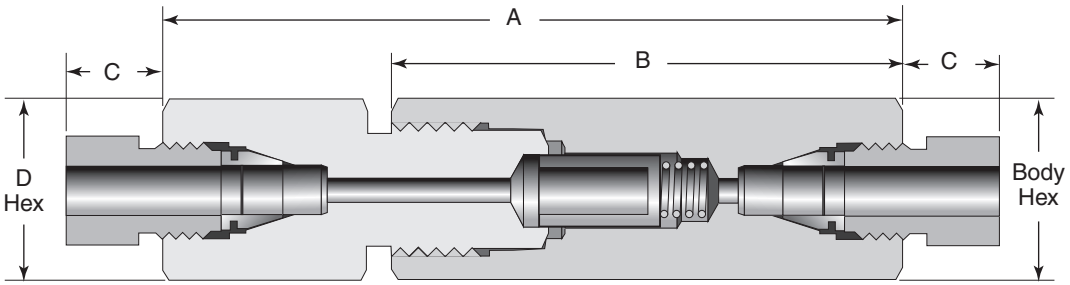

Tubing	Parker Part No.**	Pressure psi	Orifice inch (mm)	Micron Size	Cup Filter P/N	Connect.	Dimensions - inches (mm) A	B	C	D	Hex	Cover Gland Torque
1/4" O.D	4MP7-MAFCL-5-SS	15,000 psi or 20,000 psi w/-IX option	0.125 (3.18)	5	201A-2916	1/4" MPI™	3.80 (96.52)	2.63 (66.80)	.50 (12.70)	0.81 (20.57)	0.81 (20.57)	40 Ft-lbs
	4MP7-MAFCL-35-SS			35	203A-2916							
	4MP7-MAFCL-65-SS			65	204A-2916							
3/8" O.D	6MP7-MAFCL-5-SS		0.219 (5.56)	5	201A-2916	3/8" MPI™	4.40 (111.76)	3.06 (77.83)	.63 (16.00)	0.94 (23.88)	1.00 (25.40)	65 Ft-lbs
	6MP7-MAFCL-35-SS			35	203A-2916							
	6MP7-MAFCL-65-SS			65	204A-2916							
1/2" O.D	8MP7-MAFCL-5-SS		0.359 (9.12)	5	205A-2916	1/2" MPI™	5.56 (141.48)	3.94 (100.08)	.69 (17.53)	1.19 (30.23)	1.38 (35.05)	100 Ft-lbs
	8MP7-MAFCL-35-SS			35	207A-2916							
	8MP7-MAFCL-65-SS			65	208A-2916							
9/16" O.D	9MP7-MAFCL-5-SS		0.359 (9.12)	5	205A-2916	9/16" MPI™	5.56 (141.48)	3.94 (100.08)	.75 (19.05)	1.19 (30.23)	1.38 (35.05)	100 Ft-lbs
	9MP7-MAFCL-35-SS			35	207A-2916							
	9MP7-MAFCL-65-SS			65	208A-2916							
3/4" O.D	12MP7-MAFCL-5-SS		0.516 (13.11)	5	248A-2916	3/4" MPI™	7.71 (195.83)	5.76 (146.30)	.88 (22.35)	1.88 (47.75)	Ø 2.12 (53.85)	500 Ft-lbs (Min.)
	12MP7-MAFCL-35-SS			35	249A-2916							
	12MP7-MAFCL-65-SS			65	250A-2916							
1" O.D	16MP7-MAFCL-5-SS		0.688 (17.48)	5	248A-2916	1" MPI™	8.71 (221.23)	6.25 (158.75)	1.13 (28.70)	1.88 (47.75)	Ø 2.12 (53.85)	700 Ft-lbs (Max.)
	16MP7-MAFCL-35-SS			35	249A-2916							
	16MP7-MAFCL-65-SS			65	250A-2916							

** Other micron sizes are available on special order
For 2507 Super Duplex option, replace **-SS** with **-2507** (does not change filter screen material which is 316 L).
-XF Ferrules are required for sizes 12 & 16 for pressures over 10,000 psi or any 2507 Super Duplex Tubing.

-IX suffix is required to change rated working pressure to 20 ksi MAWP (per ASME 31.3 Chapter IX)
9/16" MPI™ size not available in 2507 Super Duplex (1/2" MPI™ size only)

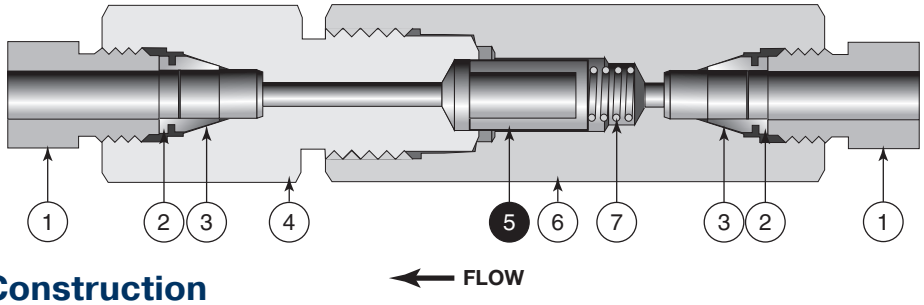

Material of Construction

Item#	Part	Material
1	Nut	316 SS
2	Back Ferrule	316 SS
3	Front Ferrule	316 SS
4	Gland Nut	316 SS
❺	Cup Filter	316 L
6	Body	316 SS
7	Spring	302 SS

NOTES:

(1) All filters furnished complete with connection components unless otherwise specified. All dimensions for reference only and subject to change.

(2) Parker Autoclave Engineers cup type filters are designed to filter small amounts of process particles. It is recommended that all fluids are thoroughly cleaned prior to entering the higher pressure system.

(3) 2507 Super Duplex filters may be supplied with four flats in place of standard hex and filter media will be made of 316 SS.

(4) Pressure differential not to exceed 1,000 psi (69 bar) in a flowing condition.

❶ Typical spare parts found in Repair Kit (Part number listed in chart above).

MAC and MACB Check Valves

Parker's MACB series (Ball Check Valve) prevent reverse flow where leak-tight shut-off is not mandatory. When differential drops below cracking pressure, valve closes. With all-metal components, valve can be used up to 1000°F (538°C). Ball and poppet are an integral design to assure positive, in-line seating without "chatter". Poppet is designed essentially for axial flow with minimum pressure drop.

Parker's MAC series (O-Ring Check Valve) provides unidirectional flow and tight shut-off for liquids and gases with high reliability. When differential drops below cracking pressure*, valve shuts off. (Not for use as a Relief Valve)

*Cracking pressure: 20 psi (1.4 bar) +/-30%. For higher cracking pressures (up to 100 psi (6.7 bar) available with special order for O-ring style check valves only.

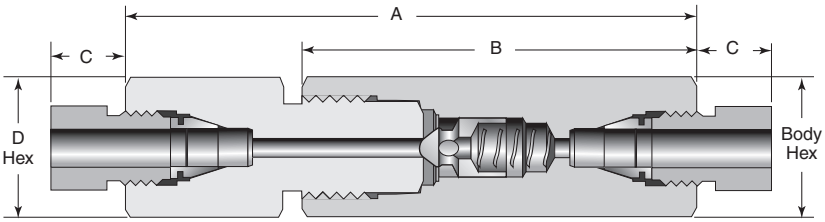

Tubing O.D.	Parker Ball Check Part No.	Parker O-Ring Check Part No.	Pressure psi (bar)	Connection	Orifice inch (mm)	Rated C_V	Dimensions - inches (mm) A	B	C	D	Hex	Repair Kits
1/4"	4MP7-MACBL-20-SS	4MP7-MACL-20-V-SS	15Ksi/20 ksi*	1/4" MPI™	0.125 (3.18)	0.28	3.80 (96.52)	2.63 (66.80)	0.50 (12.70)	0.81 (20.57)	0.81 (20.57)	R4MAC R4MACB
3/8"	6MP7-MACBL-20-SS	6MP7-MACL-20-V-SS	15Ksi/20 ksi*	3/8" MPI™	0.219 (5.56)	0.84	4.40 (111.76)	3.06 (77.83)	0.63 (16.00)	0.94 (23.88)	1.00 (25.40)	R6MAC R6MACB
1/2"	8MP7-MACBL-20-SS	8MP7-MACL-20-V-SS	15Ksi/20 ksi*	1/2" MPI™	0.359 (9.12)	2.30	5.56 (141.22)	3.94 (100.08)	0.69 (17.53)	1.19 (30.23)	1.38 (35.05)	R8MAC R8MACB
9/16"	9MP7-MACBL-20-SS	9MP7-MACL-20-V-SS	15Ksi/20 ksi*	9/16" MPI™	0.359 (9.12)	2.30	5.56 (141.22)	3.94 (100.08)	0.75 (19.05)	1.19 (30.23)	1.38 (35.05)	R9MAC R9MACB
3/4"	12MP7-MACBL-20-SS	12MP7-MACL-20-V-SS	15Ksi/20 ksi*	3/4" MPI™	0.516 (13.11)	4.70	7.05 (179.07)	5.13 (130.30)	0.88 (22.35)	1.38 (35.05)	1.75 (44.45)	R12MAC R12MACB
1"	16MP7-MACBL-20-SS	16MP7-MACL-20-V-SS	15Ksi/20 ksi*	1" MPI™	0.688 (17.48)	7.40	8.71 (221.23)	6.25 (158.75)	1.13 (28.70)	1.88 (47.75)	Ø 2.12 (53.85)	R16MAC R16MACB

Minimum operating temperature for standard BALL check valves -110°F (-79°C). For low temperature option to -423°F (-252°C) add suffix **-LT** (Low temperature spring).
Temperature range for standard Fluorocarbon Rubber O-Ring check valves is 0°F to 400°F (-18°C to 204°C). For temperatures under 0°F to -423°F use PTFE o-ring (**-TO**). If under -110°F (-79°C) Low Temperature Spring must be used (**-LT** option). See *options below for additional o-ring material options. For 2507 Super Duplex option, replace **-SS** with **-2507**. For 2507 Repair kits, include **-2507** as suffix. **-XF** Ferrules are required for 3/4" and 1" SS for pressures over 10,000 psi or 2507 Super Duplex Tubing.
* **-IX** option required for pressures to 20,000 psi (per ASME B31.3 Chapter IX)
9/16" MPI™ size not available in 2507 Super Duplex (1/2" MPI™ size only)

Ball Check Valves

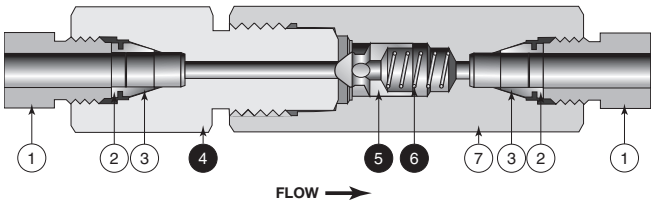

O-Ring Check Valves

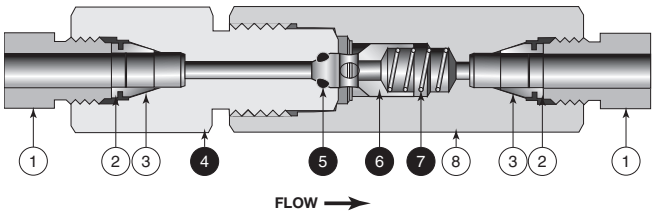

Material of Construction

Item#	Part	Material
1	Nut	316 SS
2	Back Ferrule	316 SS
3	Front Ferrule	316 SS
❹	Gland Nut	316 SS
❺	Poppet	316 SS
❻	Spring	302 SS
7	Body	316 SS

Item#	Part	Material
1	Nut	316 SS
2	Back Ferrule	316 SS
3	Front Ferrule	316 SS
❹	Gland Nut	316 SS
❺	O-Ring	Fluorocarbon Rubber*
❻	Poppet	316 SS
❼	Spring	302 SS
8	Body	316 SS
KZ*	FFKM Highly Fluorinated Fluorocarbon Rubber (30° to 500°F)	
BN*	Nitrile Rubber O-ring (-20° to 250°F)	
EPR*	Ethylene Propylene Rubber O-ring (-20° to 250°F)	
TO*	PTFE O-ring (-423° to 400°F)	

❶ Typical spare parts found in Repair Kit (add optional suffix codes as needed)

MARA Series Metal Seat Relief Valve *(Factory Set)*

Parker's MARA series (Metal Seat) relief valves provide reliable venting of gases or liquids for set pressures from 3,000 psi (206.8 bar) minimum to 20,000 psi (w/**-IX** option) (1380 bar). The standard temperature range for all models is -423°F to 400°F (-252°C to 204°C). A high temperature option to 750°F (400°C) is also available. These precision valves are designed for pressure gas systems, cryogenic systems, petrochemical applications and other special systems.

Capable of handling air, gases, steam, vapor and liquids, they are however, not recommended for steam boiler applications nor are they ASME code stampable. Relief valves are designed to open proportionally to increasing pressure. Therefore, they are not recommended for applications requiring immediate full valve flow at set pressure (such as decompositions, polymerizations, etc.). Full flow of relief valve is defined at 10% over set pressure. Relief valve accuracy = +/-3% of setpoint.

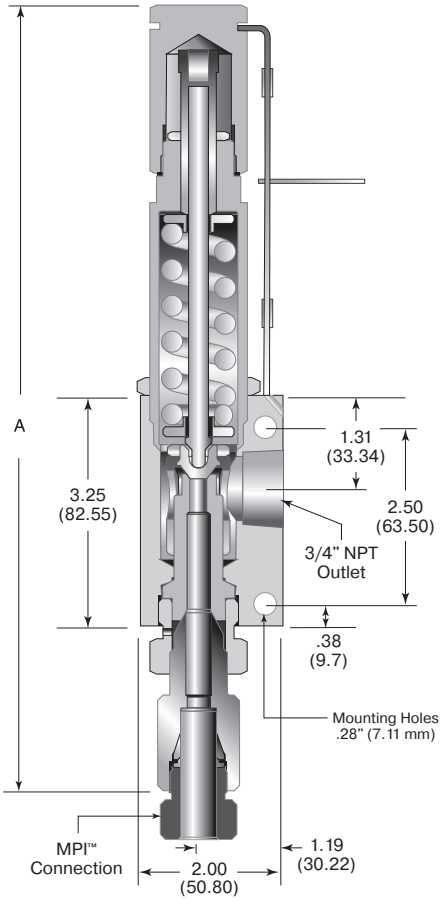

Hard Seat Part No.	Connection Size & Type		Orifice Diameter inches (mm)	Pressure Rating psi (bar) @ 100°F (38°C)			Dimension inches (mm)	Repair Kit
	Inlet Connection	Outlet Connection		Minimum Setting	Maximum Setting	Maximum Back Press.	A	
8MP712F-MARA-5-SS	1/2" MPI™	3/4" FNPT	0.188 (4.78)	3,000 (207)	5,000 (345)	500 (34)	10.84 (275)	R8MARA-5K
8MP712F-MARA-10-SS				5,000 (345)	10,000 (689)			R8MARA-10K
8MP712F-MARA-15-SS				10,000 (690)	15,000 (1034)			R8MARA-15K
8MP712F-MARA-20-SS-IX				15,000 (1035)	20,000 (1380)			R8MARA-20K
9MP712F-MARA-5-SS	9/16" MPI™	3/4" FNPT	0.188 (4.78)	3,000 (207)	5,000 (345)	500 (34)	10.84 (275)	R9MARA-5K
9MP712F-MARA-10-SS				5,000 (345)	10,000 (689)			R9MARA-10K
9MP712F-MARA-15-SS				10,000 (690)	15,000 (1035			R9MARA-15K
9MP712F-MARA-20-SS-IX				15,000 (1035)	20,000 (1380)			R9MARA-20K

For 2507 Super Duplex option, replace **-SS** with **-2507**. For 2507 Repair kits, include **-2507** as suffix.
9/16" MPI™ size not available in 2507 Super Duplex (1/2" MP™ size only)
-XF Ferrules are required for 3/4" and 1" 316 SS or 2507 Super Duplex Tubing.
-IX option required for pressures to 20,000 psi (per ASME B31.3 Chapter IX)
Relief Valves are factory set - Supply Set Pressure at time of order

MARA Series Metal Seat Relief Valve *(Factory Set)*

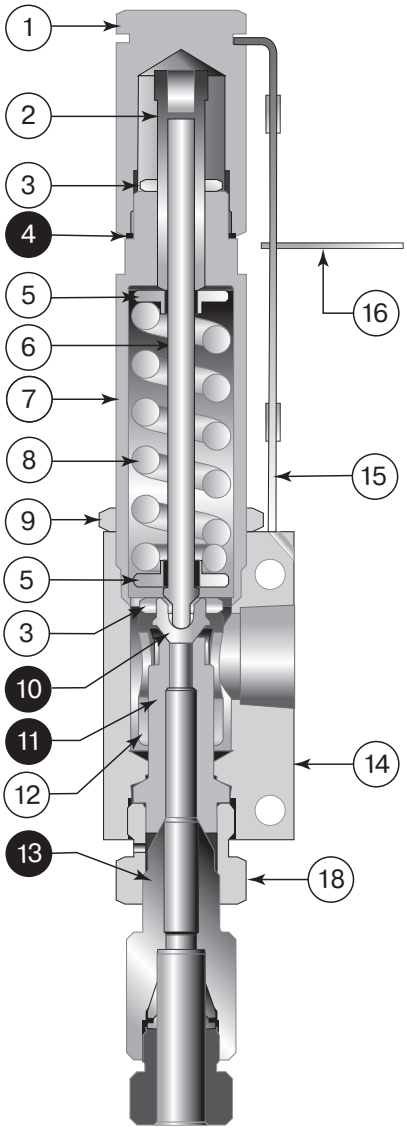

Material of Construction

Item#	Part	Material
1	Cap	316 SS
2	Adjusting Bolt	Nitronic 60
3	Locknut	316 SS
❹	Gasket	304 SS Annealed
5	Spring Washer	316 SS
6	Spindle	316 SS
7	Spring Cylinder	316 SS
8	Spring	316 SS
9	Locknut	316 SS
❿	Plug	316 SS
⓫	Seat	316 SS
12	Plug Guide	Nitronic 60
⓭	One Piece Adapter	316 SS
14	Body	316 SS
15	Cable	316 SS
16	Nameplate	304 SS
17	Splicing Sleeve (Not Shown)	316 SS
18	Seat Gland	316 SS

❹ Typical spare parts found in Repair Kit

Caution:

1. Parker Relief Valves are preset and factory sealed. Warranty is voided if seal is broken by customer.
2. Maximum system operating pressure should not exceed 90% of relief valve set pressure. Pressures in excess of this value may cause weepage resulting in damage to plug and seat.
3. Care should be taken when locating a relief valve within a piping system to keep the relief valve as far from the pump as possible. Certain pumps create an end-of-stroke spike in pressure that is not detectable by common instrumentation. These spikes could cause premature failure of the relief valve.

Gas Flow Curves (SCFM of Nitrogen)

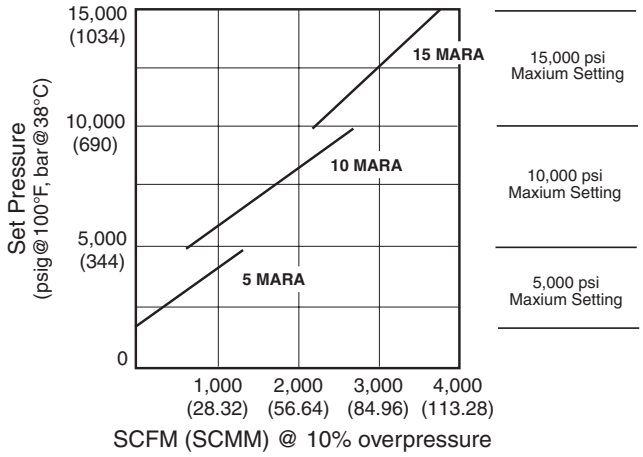

Liquid Flow Curves (Water)

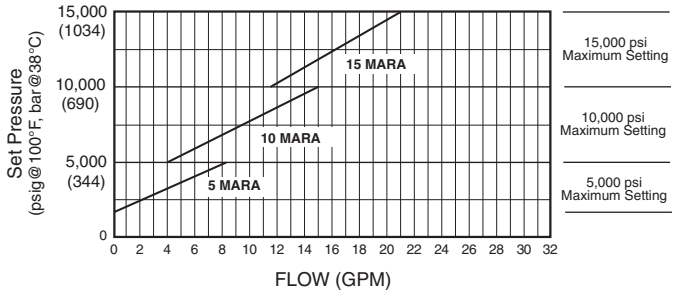

(Flow Curves shown are all that are available at this time.)

MARSA Soft Seat Relief Valve *(Factory Set)*

Parker's MARSA series (Soft Seat) relief valves utilize a soft seat design for reliable venting of gases at set pressures from 1,500 psi (103 bar) to 20,000 psi (w/**-IX** option) (1380 bar). The operating temperature range is -50°F (-46°C) to 400°F (204°F). The soft seat design provides bubble tight sealing, repeatable pop-off, and reseat. Additionally, soft seat valves provide a higher cycle life than metal seat relief valves.

These precision valves are designed for pressure gas systems, where zero leakage is critical. They are not recommended for liquid nitrogen or liquid carbon dioxide, which produce gas at cryogenic temperatures upon relief. Relief valves are designed to open proportionally to increasing pressure. Therefore, they are not recommended for applications requiring immediate full valve flow at set pressure (such as decompositions, polymerizations, etc.). Full flow of relief valve is defined at 10% over set pressure.
Relief Valve Accuracy = +/-3% of Setpoint.

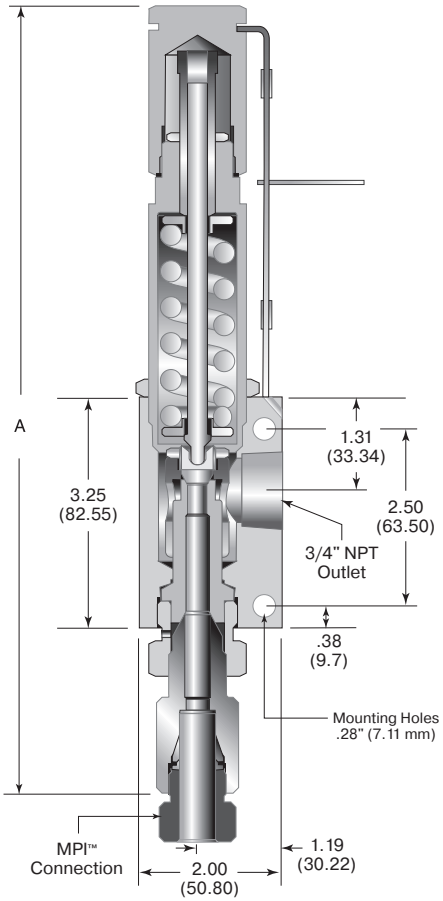

Soft Seat Part No.	Connection Size & Type		Orifice Diameter inches (mm)	Pressure Rating psi (bar) @ 100°F (38°C)			Dimension inches (mm)	Repair Kit
	Inlet Connection	Outlet Connection		Minimum Setting	Maximum Setting	Maximum Back Press.	A	
8MP712F-MARSA-5-SS	1/2" MPI™	3/4" FNPT	0.156 (3.96)	1,500 (1032)	5,000 (345)	500 (34)	10.84 (275)	R8MARSA-5K
8MP712F-MARSA-10-SS				5,000 (345)	10,000 (689)			R8MARSA-10K
8MP712F-MARSA-20-SS-IX				10,000 (6896)	20,000 (1380)			R8MARSA-20K
9MP712F-MARSA-5-SS	9/16" MPI™	3/4" FNPT	0.156 (3.96)	1,500 (103)	5,000 (345)	500 (34)	10.84 (275)	R9MARSA-5K
9MP712F-MARSA-10-SS				5,000 (345)	10,000 (689)			R9MARSA-10K
9MP712F-MARSA-20-SS-IX				10,000 (689)	20,000 (1380)			R9MARSA-20K

For 2507 Super Duplex option, replace **-SS** with **-2507**. For 2507 Repair kits, include **-2507** as suffix.
9/16" MPI™ size not available in 2507 Super Duplex (1/2" MP™ size only)
-XF Ferrules are required for 3/4" and 1" 316 SS or 2507 Super Duplex Tubing.
-IX option required for pressures to 20,000 psi (per ASME B31.3 Chapter IX).
Relief Valves are factory set - Supply Set Pressure at time of order

MARSA Soft Seat Relief Valve *(Factory Set)*

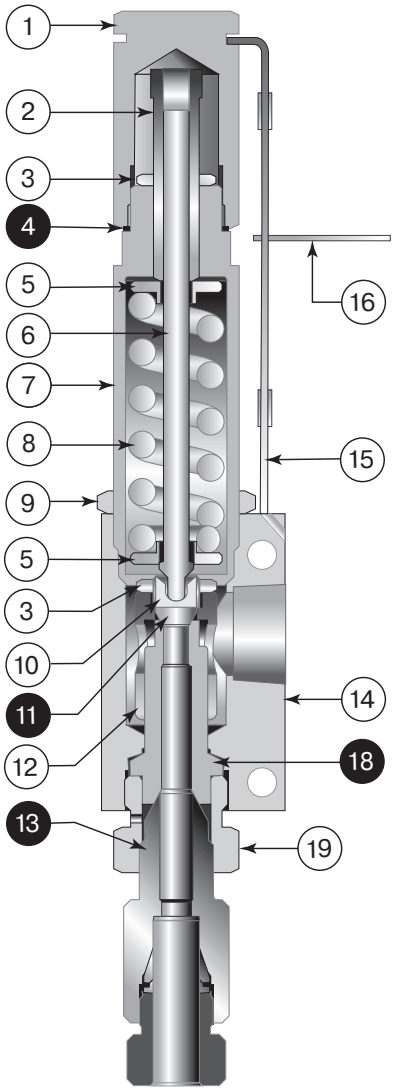

Material of Construction

Item#	Part	Material
1	Cap	316 SS
2	Adjusting Bolt	Nitronic 60
3	Locknut	316 SS
❹	Gasket	304 SS Annealed
5	Spring Washer	316 SS
6	Spindle	316 SS
7	Spring Cylinder	316 SS
8	Spring	316 SS
9	Locknut	316 SS
10	Plug Gland	316 SS
⓫	Soft Seal	Carbon-Filled Peek
12	Plug Guide	Nitronic 60
⓭	One Piece Adapter	316 SS
14	Body	316 SS
15	Cable	316 SS
16	Nameplate	304 SS
17	Splicing Sleeve (Not Shown)	316 SS
⓲	Seat	316 SS
19	Seat Gland	316 SS

❹ Typical spare parts found in Repair Kit

Caution:

1. Parker Relief Valves are preset and factory sealed. Warranty is voided if seal is broken by customer.
2. Maximum system operating pressure should not exceed 90% of relief valve set pressure. Pressures in excess of this value may cause weepage resulting in damage to plug and seat.
3. Care should be taken when locating a relief valve within a piping system to keep the relief valve as far from the pump as possible. Certain pumps create an end-of-stroke spike in pressure that is not detectable by common instrumenta tion. These spikes could cause premature failure of the relief valve.

NOTE: The MARA (or MARSA) Relief valve is shown without included MPI Nut and Ferrules.

Gas Flow Curves (SCFM of Nitrogen)

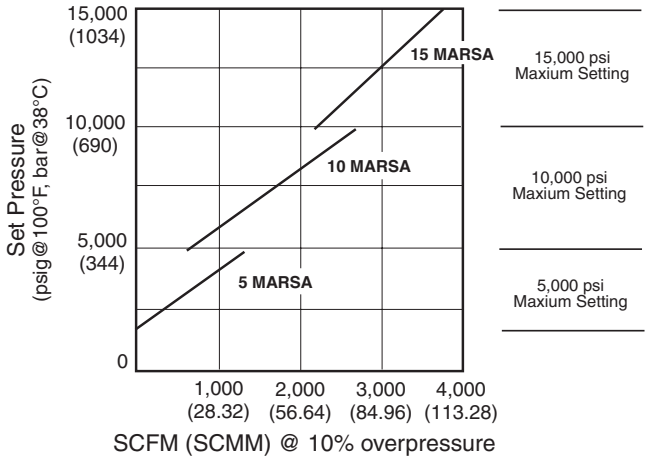

Liquid Flow Curves (Water)

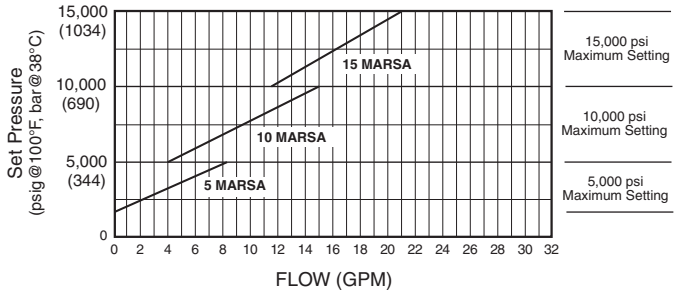

(Flow Curves shown are all that are available at this time.)

Technical Information

Tools and Installation Instruction

This section contains all instructions and tooling needed to install Parker MPI™ Fittings and Valves.

MPI™ Fittings are assembled with standard hand tools up to 9/16" size. 1-1/2 turns past finger tight is all that is needed, 3/4 and 1 inch Stainless Steel tubing, all Autoclave Cone & Thread tubing, and all 2507 Super Duplex tubing must have ferrules hydraulically preset.

Note: All sizes can be hydraulically preset using the Parker Preset Tooling shown on page 90.

Refer to the ***MPI™ Preset Instructional Manual, Catalog 4234-B1***, for proper use of the MPI™ tooling.

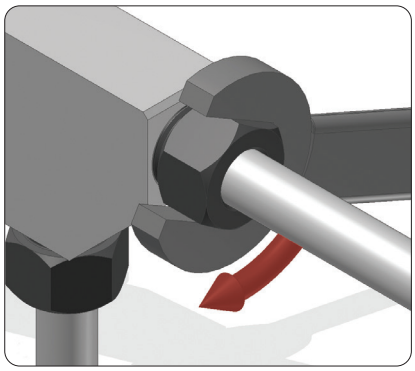

Overview:

- Assembly
- Gaugeability
- Remake
- Gap Gauge
- Hydraulic Preset Tools

Parker Part No.
MPI GAP GAGE

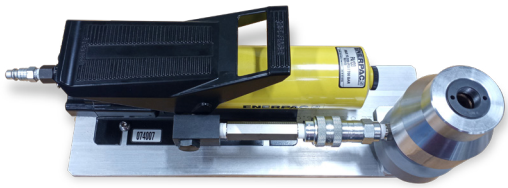

Parker Part No.
MPI AIR PUMP KIT

Parker Part No.
MPI HAND PUMP KIT

These instructions apply to medium-pressure tube fitting sizes from 1/4" to 1". Hydraulic presetting is strongly recommended for 3/4" and 1" MPI™ tube fittings and valves (**-XF** Ferrules are required for 316/317SS sizes 12 & 16 for pressures over 10,000 psi or all 2507 Super Duplex Tubing) Parker multihead hydraulic preset units (MPI™ SMALL and MPI™ LARGE) are needed to preset ferrules, see page 90 for set pressure instructions. Please note, kits do **NOT** include dies.

Assembly

1. Square cut the end of the tube and remove burrs from tube outside and inside diameter.

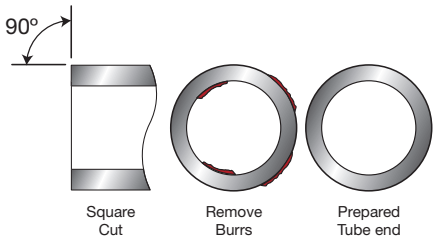

2. Parker MPI™ Fittings are sold completely assembled and ready for immediate use. Simply insert the tube as illustrated until it bottoms in the fitting body.

   Make sure that the tube rests firmly on the shoulder of the fitting body.

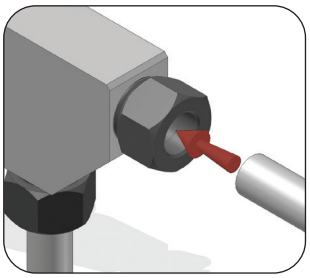

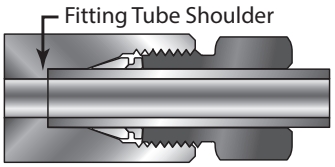

3. Turn the nut to the "finger tight" position. Hold the fitting body with a second wrench to prevent the body from turning as you tighten the nut. For hand assembly, tighten the nut 1-1/2 turns. For 3/4" and 1" sizes and all Autoclave Cone & Thread tubing and all 2507 Super Duplex tubing, hydraulically preset the nut and ferrules and then tighten the nut 1/2 turn only. See page 92 & 93 for more information on preset connections. Parker recommends that you mark the nut (using a scribe or ink) to help you count the turns.

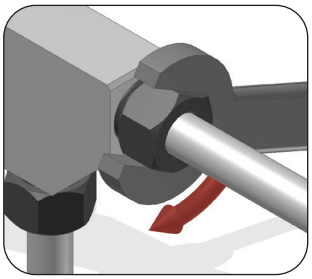

Gaugeability

Check the gap between the nut and the body hex with the end of the gauge by inserting the gauge (as shown) into the beveled gap between the nut and body hex. Gently turn the gauge (that is, it "twists out"). However, if the gauge slides into the beveled gap, (does not "twist out") the fitting is not properly made up and you must check the entire assembly procedure.

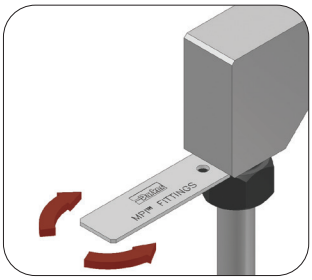

Remake

For maximum number of remakes, mark the fitting and nut before disassembly. Before retightening, make sure the assembly has been inserted into the fitting until the ferrule seats in the fitting. Retighten the nut by hand. Rotate the nut with a wrench to the original position as indicated by the previous marks lining up. (A noticeable increase in mechanical resistance will be felt indicating the ferrule is being re-sprung into sealing position.)

Gap Gauge

This one handy gauge works for all MPI™ sizes.
The end of the gauge checks the fitting gap after make-up.

Parker Part Number: **MPI GAP GAUGE**

Gap Gauge

MPI™ Hydraulic Preset Tools (316 Tubing)

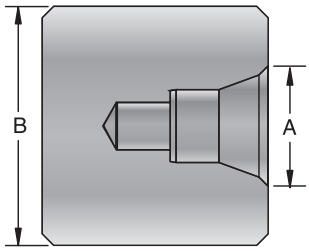

MPI™ Body Die

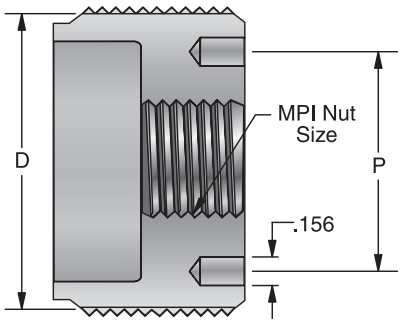

MPI™ Nut Die

316 Tubing Preset Pressures

Body Dies and Nut Dies Used with the MPI™ Small Preset Assembly

MPI Small Preset Assembly		Inches					
Body Die Part No.	Nut Die Part No.	A	B	D	P	MPI™ Nut Size	Preset Pressure PSIG
4 MPI Body Die	4 MPI Nut Die	.50	1.25	1.62	1.20	4	3,200
6 MPI Body Die	6 MPI Nut Die	.63	1.25	1.62	1.20	6	4,000
8 MPI Body Die	8 MPI Nut Die	.82	1.25	1.62	1.20	8	6,800
9 MPI Body Die	9 MPI Nut Die	.88	.88	1.62	1.20	9	8,500

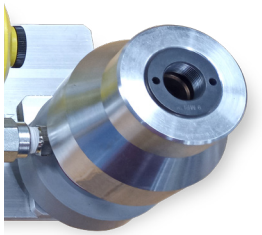

Parker Part No.
MPI SMALL Preset Assembly

Body Dies and Nut Dies Used with the MPI™ Large Preset Assembly

MPI Large Preset Assembly		Inches					Preset Pressure PSIG	-XF Preset Pressure (psi)
Body Die Part No.	Nut Die Part No.	A	B	D	P	MPI™ Nut Size		
*9 MPI Body Die	9 MPI Large Nut Die	.88	1.25	2.00	1.67	9	3,600	-
12 MPI Body Die	12 MPI Nut Die	1.13	1.75	2.00	1.67	12	5,200	6,000
16 MPI Body Die	16 MPI Nut Die	1.44	1.75	2.00	1.67	16	8,000	8,000

* Requires a 9 MPI Body Die Adapter

Parker Part No.
MPI LARGE Preset Assembly

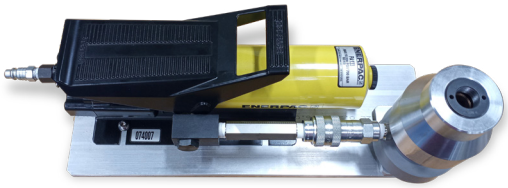

Parker Part No.
MPI AIR PUMP KIT
(Operating Instructions: See page 92)

Parker Part No.
MPI HAND PUMP KIT
(Operating Instructions: See page 93)

NOTE: One Pump Kit, Preset Assembly, Body Die and Nut Die are required for presetting. Pump Kits and Preset Assemblies can be interchanged but Body Dies and Nut Dies are for a specific Preset Assembly. Detailed operating instructions are included with each kit. The MPI™ Preset Instruction Manual, Bulletin 4234-B1, may be downloaded from Parker.com.

MPI™ Hydraulic Preset Tools (2507 Tubing)

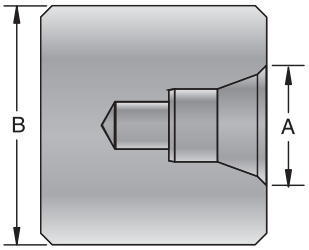

MPI™ Body Die

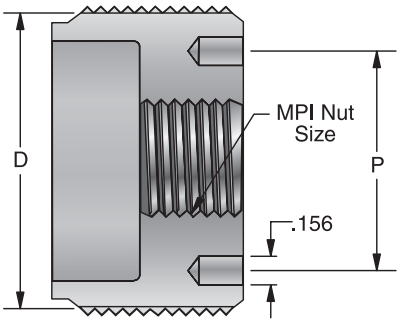

MPI™ Nut Die

2507 Tubing Preset Pressures

Body Dies and Nut Dies Used with the MPI™ Small Preset Assembly

MPI Small Preset Assembly		Inches					
Body Die Part No.	**Nut Die Part No.**	**A**	**B**	**D**	**P**	**MPI™ Nut Size**	**Preset Pressure PSIG**
4 MPI Body Die	4 MPI Nut Die	.50	1.25	1.62	1.20	4	4,000
6 MPI Body Die	6 MPI Nut Die	.63	1.25	1.62	1.20	6	4,400
8 MPI Body Die	8 MPI Nut Die	.82	1.25	1.62	1.20	8	8,000

9/16" MPI™ size not available in 2507 Super Duplex (1/2" MPI™ size only)

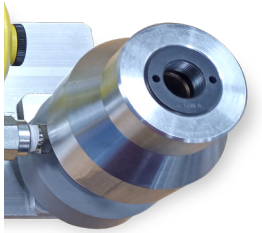

Parker Part No.
MPI SMALL Preset Assembly

Body Dies and Nut Dies Used with the MPI™ Large Preset Assembly

MPI Large Preset Assembly		Inches						
Body Die Part No.	**Nut Die Part No.**	**A**	**B**	**D**	**P**	**MPI™ Nut Size**	**Preset Pressure PSIG**	**-XF Preset Pressure (psi)**
10 MPI Body Die	10 MPI Large Nut Die						4,400	-
12 MPI Body Die*	12 MPI Nut Die	1.13	1.75	2.00	1.67	12	5,600	6,000
16 MPI Body Die	16 MPI Nut Die	1.44	1.75	2.00	1.67	16	8,800	8,000

* Requires a 9 MPI Body Die Adapter

Parker Part No.
MPI LARGE Preset Assembly

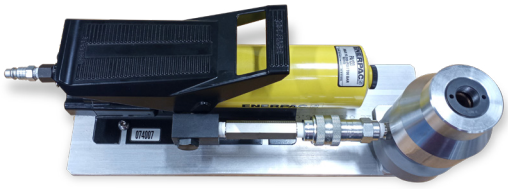

Parker Part No.
MPI AIR PUMP KIT
(Operating Instructions: See page 92)

Parker Part No.
MPI HAND PUMP KIT
(Operating Instructions: See page 93)

NOTE: One Pump Kit, Preset Assembly, Body Die and Nut Die are required for presetting. Pump Kits and Preset Assemblies can be interchanged but Body Dies and Nut Dies are for a specific Preset Assembly. Detailed operating instructions are included with each kit. Copies may also be obtained by contacting the Division.

MPI™ Hydraulic Presetting:
Air Pump Kit Instructions

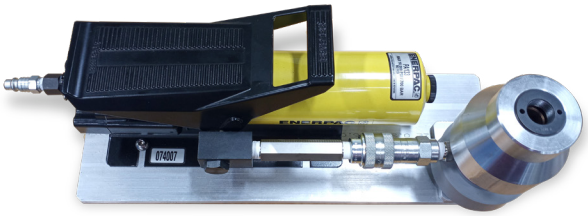

MPI™ Air Pump Kit Setup

1. Attach the Air Pump to a clean air supply of 60-120 psi and 9 scfm.

2. Attach pressure gauge to air pump by pushing quick coupling on to the nipple and tightening the collar gently until it stops.

3. Set pump preset pressure as follows. Identify the preset pressure for the preset head size and MPI™ fitting size. Remove the small black plastic cap on the swivel ping and adjust the pump relief valve screw by inserting the Tee handle Allen wrench. Rotate the screw until the gauge reads the desired preset pressure with the pump activated.

4. Relieve pump pressure by pressing the pedal down on the opposite side. Activate the pump again to check the preset pressure and then relieve the pressure again. After the gauge reads 0, unscrew the collar and remove the gauge by pulling straight out.

5. Attach the preset head to the Air Pump by pushing quick coupling on to the nipple and tightening the collar gently until it stops.

6. *(Optional)* Sometimes air can become trapped in the hydraulic system which can cause longer preset times and a jerky preset motion. To bleed the air, rotate the preset head to point down and tilt the pump so the hydraulic line is inclined slightly upward from the head to the pump. Activate the pump briefly (2-3 seconds) and then relieve pressure. Activate and relieve pressure 2-5 times to relieve the air.

7. Rotate the preset head to point left, right or up (depending on the desired angle of use) and the ram should rest flat against the pad.

8. Insert preset body die into the head with the tapered body seat pointing out.

9. Screw the nut die into the preset head until it bottoms firmly against the bottom using the nut die handle. The face of the nut die should be approximately flush with the face to the top of the preset head.

10. The MPI™ Air Pump Kit is now ready for use.

MPI™ Air Pump Kit Presetting

1. Square cut the end of the tube and remove burrs from tube OD and ID.

2. Slide nut and ferrules onto the tube with tapered end of ferrules pointed toward the end of the tube. (proper sequence is nut, small back ferrule and then larger front ferrule)

3. Hold nut and ferrules on the tube while inserting the tube into the head and seat the end of the tube against the tube stop in the body die.

4. Push the ferrules into the head and finger tighten (do not wrench) the nut into the nut die. Rotate the nut until the hex almost bottoms against the top of the nut die. Leaving the nut approximately 1/4 turn from the nut die makes it easier to remove after presetting.

5. Activate the pump by pushing down on the pedal for approximately 5 seconds or until you hear the change in speed as the relief valve activates.

6. Relieve pressure by pushing down on the opposite side of the pedal and remove nut/ferrule assembly from the head by rotating the nut out. This should be easily done by hand without the use of a wrench.

7. Inspect the preset nut/ferrule assembly to insure that the nut rotates easily on the tube, the ferrules are seated firmly on the tube, and the gap between the ferrules is closed (you may see a very slight gap due to ferrule spring).

8. Insert the preset nut/ferrule assembly into the fitting body until the ferrules seat firmly and tighten the nut by hand to the finger tight position. Hold the fitting body with a wrench to prevent rotation as you continue to wrench tighten the nut 1/2 turn. (A sharp increase in resistance will be felt indicating the ferrules are being re-sprung into a sealing position.)

9. *(Optional)* Check the gap between the nut and the body with the end of the gauge. Insert the gauge (as shown) into the beveled gap between the nut hex and the body. Gently turn the gauge and it should “twist out” easily.

   However, if the gauge slides into the gap and does not “twist out”, the fitting is not properly assembled and you must check the entire assembly procedure.

MPI™ Hydraulic Presetting:
Hand Pump Kit Instructions

MPI™ Hand Pump Kit Setup

1. Identify the preset pressure for the preset head size and MPI™ fitting size.

2. Attach the preset head to the Hand Pump by pushing quick coupling on to the nipple and tightening the collar gently until it stops. Rotate the preset head to point left, right or up (depending on the desired angle of use) attaching.

3. Relieve the reservoir pressure on the pump by rotating the cap approximately 1/4 turn counter clockwise to the "vent" position. Remember to close the cap before transporting the pump or hydraulic fluid can leak from the reservoir. Due to the small volume of fluid used in presetting, the pump can be used with the vent cap in the closed position, but it still should be vented and closed occasionally to relieve pressure due to temperature changes, etc.

4. *(Optional)* Sometimes air can become trapped in the hydraulic system which can cause longer preset times and a jerky preset motion. To bleed the air, close the hydraulic valve by rotating handle clockwise until it stops. Pump the handle until light resistance is felt and the gauge starts to move. Tilt the pump so the head is straight down and relieve the pressure by turning the hydraulic valve counter clockwise. A gurgling sound will be heard if trapped air is forced back into the reservoir. Repeat this process 2-3 times to purge the air.

5. Insert preset body die into the head with the tapered body seat pointing out.

6. Screw the nut die into the preset head until it bottoms firmly against the bottom using the nut die handle. The face of the nut die should be approximately flush with the face to the top of the preset head.

7. The MPI™ Hand Pump Kit is now ready for use.

MPI™ Hand Pump Kit Presetting

1. Square cut the end of the tube and remove burrs from tube OD and ID.

2. Slide nut and ferrules onto the tube with tapered end of ferrules pointed toward the end of the tube. (proper sequence is nut, small back ferrule and then larger front ferrule)

3. Hold nut and ferrules on the tube while inserting the tube into the head and seat the end of the tube against the tube stop in the body die.

4. Push the ferrules into the head and finger tighten (do not wrench) the nut into the nut die. Rotate the nut until the hex almost bottoms against the top of the nut die. Leaving the nut approximately 1/4 turn from the nut die makes it easier to remove after presetting.

5. Close the hydraulic valve by turning clockwise to a firm stop. Pump the handle until the preset pressure is indicated on the gauge.

6. Relieve pressure by turning the hydraulic valve handle counter clockwise and remove nut/ferrule assembly from the head by rotating the nut out. This should be easily done by hand without the use of a wrench.

7. Inspect the preset nut/ferrule assembly to ensure that the nut rotates easily on the tube, the ferrules are seated firmly on the tube, and the gap between the ferrules is closed (you may see a very slight gap due to ferrule spring).

8. Insert the preset nut/ferrule assembly into the fitting body until the ferrules seat firmly and tighten the nut by hand to the finger tight position. Hold the fitting body with a wrench to prevent rotation as you continue to wrench tighten the nut 1/2 turn. (A sharp increase in resistance will be felt indicating the ferrules are being re-sprung into a sealing position.)

9. *(Optional)* Check the gap between the nut and the body with the end of the gauge. Insert the gauge (as shown) into the beveled gap between the nut hex and the body. Gently turn the gauge and it should "twist out" easily.

   However, if the gauge slides into the gap and does not "twist out", the fitting is not properly assembled, and you must check the entire assembly procedure.

Part Number Crossover Charts

The valves in this catalog differ from valves sold before July, 2015 and while the new valves meet or exceed the prior valve design capabilities, the dimensions are different and as such, new part numbering was required.

The charts following will indicate where in this catalog or in what additional brochure the replacement information can be found.

Note: Catalogs with a "**PAE…**" (Parker Autoclave Engineers) reference can be viewed by downloading our Autoclave Catalog Hub…**Click here**!

Part Number Crossover Reference Chart

MPI™ Part Numbers Sold Prior to July 2015 (includes Catalog 4234)	New Part Number	Additional Catalog Needed
2F-MAB3XPK-BN-SSP	3B3S15P2-BO	PAE Ball Valve
2F-MAB3XPKD-BN-SSP	3BD3S15P2-BO	PAE Ball Valve
2F-MAB3XPKD-EPR-SSP	3BD3S15P2-EPR	PAE Ball Valve
2F-MAB3XPKD-KZ-SSP	3BD3S15P2-HT	PAE Ball Valve
2F-MAB3XPKD-V-SSP	3BD3S15P2	PAE Ball Valve
2F-MAB3XPK-EPR-SSP	3B3S15P2-EPR	PAE Ball Valve
2F-MAB3XPK-KZ-SSP	3B3S15P2-HT	PAE Ball Valve
2F-MAB3XPK-V-SSP	3B3S15P2	PAE Ball Valve
2F-MAB4LPK-BN-SSP	2B4S15P2-BO	PAE Ball Valve
2F-MAB4LPK-EPR-SSP	2B4S15P2-EPR	PAE Ball Valve
2F-MAB4LPK-KZ-SSP	2B4S15P2-HT	PAE Ball Valve
2F-MAB4LPK-V-SSP	2B4S15P2	PAE Ball Valve
2F-MANAB-T-SS	15P2002	PAE P Series Needle Valve
2F-MANLB-T-SS	15P2001	PAE P Series Needle Valve
2F-MANLR-T-SS	15P2011	PAE P Series Needle Valve
2F-MPBLPK-BN-SSP	2B4S15P2-BO	PAE Ball Valve
2F-MPBLPK-EPR-SSP	2B4S15P2-EPR	PAE Ball Valve
2F-MPBLPK-KZ-SSP	2B4S15P2-HT	PAE Ball Valve
2F-MPBLPK-V-SSP	2B4S15P2	PAE Ball Valve
2F-MPBXPK-BN-SSP	3B3S15P2-BO	PAE Ball Valve
2F-MPBXPKD-BN-SSP	3BD3S15P2-BO	PAE Ball Valve
2F-MPBXPKD-EPR-SSP	3BD3S15P2-EPR	PAE Ball Valve
2F-MPBXPKD-KZ-SSP	3BD3S15P2-HT	PAE Ball Valve
2F-MPBXPKD-V-SSP	3BD3S15P2	PAE Ball Valve
2F-MPBXPK-EPR-SSP	3B3S15P2-EPR	PAE Ball Valve
2F-MPBXPK-KZ-SSP	3B3S15P2-HT	PAE Ball Valve
2F-MPBXPK-V-SSP	3B3S15P2	PAE Ball Valve
2F-MPNAB-T-SS	15P2002	PAE P Series Needle Valve
2F-MPNAR-T-SS	15P2012	PAE P Series Needle Valve
2F-MPNLB-T-SS	15P2001	PAE P Series Needle Valve
2F-MPNLR-T-SS	15P2011	PAE P Series Needle Valve
4F8F-MARA-10000-SS	10PRVP4083	PAE P Series Relief Valve
4F8F-MARA-15000-SS	15PRVP4083	PAE P Series Relief Valve
4F8F-MPRA-10000-SS	10PRVP4083	PAE P Series Relief Valve
4F8F-MPRA-15000-SS	15PRVP4083	PAE P Series Relief Valve
4F-MAB3XPK-BN-SSP	3B3S15P4-BO	PAE Ball Valve NPT Conn.
4F-MAB3XPKD-BN-SSP	3BD3S15P4-BO	PAE Ball Valve NPT Conn.
4F-MAB3XPKD-EPR-SSP	3BD3S15P4-EPR	PAE Ball Valve NPT Conn.
4F-MAB3XPKD-KZ-SSP	3BD3S15P4-HT	PAE Ball Valve NPT Conn.
4F-MAB3XPKD-V-SSP	3BD3S15P4	PAE Ball Valve NPT Conn.
4F-MAB3XPK-EPR-SSP	3B3S15P4-EPR	PAE Ball Valve NPT Conn.
4F-MAB3XPK-KZ-SSP	3B3S15P4-HT	PAE Ball Valve NPT Conn.
4F-MAB3XPK-V-SSP	3B3S15P4	PAE Ball Valve NPT Conn.
4F-MAB4LPK-BN-SSP	2B4S15P4-BO	PAE Ball Valve NPT Conn.
4F-MAB4LPK-EPR-SSP	2B4S15P4-EPR	PAE Ball Valve NPT Conn.
4F-MAB4LPK-KZ-SSP	2B4S15P4-HT	PAE Ball Valve NPT Conn.
4F-MAB4LPK-V-SSP	2B4S15P4	PAE Ball Valve NPT Conn.
4F-MAB6LPK-BN-SSP	2B6S15P4-BO	PAE Ball Valve NPT Conn.
4F-MAB6LPK-EPR-SSP	2B6S15P4-EPR	PAE Ball Valve NPT Conn.
4F-MAB6LPK-KZ-SSP	2B6S15P4-HT	PAE Ball Valve NPT Conn.
4F-MAB6LPK-V-SSP	2B6S15P4	PAE Ball Valve NPT Conn.
4F-MAB6XPK-BN-SSP	3B6S15P4-BO	PAE Ball Valve NPT Conn.
4F-MAB6XPKD-BN-SSP	3BD6S15P4-BO	PAE Ball Valve NPT Conn.
4F-MAB6XPKD-EPR-SSP	3BD6S15P4-EPR	PAE Ball Valve NPT Conn.
4F-MAB6XPKD-KZ-SSP	3BD6S15P4-HT	PAE Ball Valve NPT Conn.
4F-MAB6XPKD-V-SSP	3BD6S15P4	PAE Ball Valve NPT Conn.
4F-MAB6XPK-EPR-SSP	3B6S15P4-EPR	PAE Ball Valve NPT Conn.
4F-MAB6XPK-KZ-SSP	3B6S15P4-HT	PAE Ball Valve NPT Conn.
4F-MAB6XPK-V-SSP	3B6S15P4	PAE Ball Valve NPT Conn.
4F-MACBL-20-SS	CPB4400	PAE P Series Fitting/Tubing
4F-MACL-20-V-SS	CPO4400	PAE P Series Fitting/Tubing
4F-MADBB6LPK-BN-SS	6DB15P4P4-BO	PAE Ball Valve NPT Conn.
4F-MADBB6LPK-EPR-SS	6DB15P4P4-EPR	PAE Ball Valve NPT Conn.
4F-MADBB6LPK-KZ-SS	6DB15P4P4-HT	PAE Ball Valve NPT Conn.
4F-MADBB6LPK-V-SS	6DB15P4P4	PAE Ball Valve NPT Conn.
4F-MANAB-T-SS	15P4083	PAE P Series Needle Valve
4F-MANAB-T-SS-LTB	15P4083-B	PAE P Series Needle Valve
4F-MANAR-T-SS	15P4082	PAE P Series Needle Valve

MPI™ Part Numbers Sold Prior to July 2015 (includes Catalog 4234)	New Part Number	Additional Catalog Needed
4F-MANAR-T-SS-LTB	15P4082-B	PAE P Series Needle Valve
4F-MANLB-T-SS	15P4071	PAE P Series Needle Valve
4F-MANLB-T-SS-LTB	15P4071-B	PAE P Series Needle Valve
4F-MANLR-T-SS	15P4081	PAE P Series Needle Valve
4F-MANLR-T-SS-LTB	15P4081-B	PAE P Series Needle Valve
4F-MANXBD-T-SS	15P4075	PAE P Series Needle Valve
4F-MANXBD-T-SS-LTB	15P4075-B	PAE P Series Needle Valve
4F-MANXBI-T-SS	15P4073	PAE P Series Needle Valve
4F-MANXBI-T-SS-LTB	15P4073-B	PAE P Series Needle Valve
4F-MANXBO-T-SS	15P4074	PAE P Series Needle Valve
4F-MANXBO-T-SS-LTB	15P4074-B	PAE P Series Needle Valve
4F-MANXRD-T-SS	15P4085	PAE P Series Needle Valve
4F-MANXRD-T-SS-LTB	15P4085-B	PAE P Series Needle Valve
4F-MANXRI-T-SS	15P4083	PAE P Series Needle Valve
4F-MANXRI-T-SS-LTB	15P4083-B	PAE P Series Needle Valve
4F-MANXRO-T-SS	15P4084	PAE P Series Needle Valve
4F-MANXRO-T-SS-LTB	15P4084-B	PAE P Series Needle Valve
4F-MPBLPK-BN-SSP	2B4S15P4-BO	PAE Ball Valve NPT Conn.
4F-MPBLPK-EPR-SSP	2B4S15P4-EPR	PAE Ball Valve NPT Conn.
4F-MPBLPKH-BN-SSP	2B6S15P4-BO	PAE Ball Valve NPT Conn.
4F-MPBLPKH-EPR-SSP	2B6S15P4-EPR	PAE Ball Valve NPT Conn.
4F-MPBLPKH-KZ-SSP	2B6S15P4-HT	PAE Ball Valve NPT Conn.
4F-MPBLPKH-V-SSP	2B6S15P4	PAE Ball Valve NPT Conn.
4F-MPBLPK-KZ-SSP	2B4S15P4-HT	PAE Ball Valve NPT Conn.
4F-MPBLPK-V-SSP	2B4S15P4	PAE Ball Valve NPT Conn.
4F-MPBXPK-BN-SSP	3B3S15P4-BO	PAE Ball Valve NPT Conn.
4F-MPBXPKD-BN-SSP	3BD3S15P4-BO	PAE Ball Valve NPT Conn.
4F-MPBXPKD-EPR-SSP	3BD3S15P4-EPR	PAE Ball Valve NPT Conn.
4F-MPBXPKDH-BN-SSP	3BD6S15P4-BO	PAE Ball Valve NPT Conn.
4F-MPBXPKDH-EPR-SSP	3BD6S15P4-EPR	PAE Ball Valve NPT Conn.
4F-MPBXPKDH-KZ-SSP	3BD6S15P4-HT	PAE Ball Valve NPT Conn.
4F-MPBXPKDH-V-SSP	3BD6S15P4	PAE Ball Valve NPT Conn.
4F-MPBXPKD-KZ-SSP	3BD3S15P4-HT	PAE Ball Valve NPT Conn.
4F-MPBXPKD-V-SSP	3BD3S15P4	PAE Ball Valve NPT Conn.
4F-MPBXPK-EPR-SSP	3B3S15P4-EPR	PAE Ball Valve NPT Conn.
4F-MPBXPKH-BN-SSP	3B6S15P4-BO	PAE Ball Valve NPT Conn.
4F-MPBXPKH-EPR-SSP	3B6S15P4-EPR	PAE Ball Valve NPT Conn.
4F-MPBXPKH-KZ-SSP	3B6S15P4-HT	PAE Ball Valve NPT Conn.
4F-MPBXPKH-V-SSP	3B6S15P4	PAE Ball Valve NPT Conn.
4F-MPBXPK-KZ-SSP	3B3S15P4-HT	PAE Ball Valve NPT Conn.
4F-MPBXPK-V-SSP	3B3S15P4	PAE Ball Valve NPT Conn.
4F-MPCBL-5-SS	CPB4400	PAE P Series Fitting/Tubing
4F-MPCL-5-V-SS	CPO4400	PAE P Series Fitting/Tubing
4F-MPNAB-T-SS	15P4083	PAE P Series Needle Valve
4F-MPNAB-T-SS-LTB	15P4083-B	PAE P Series Needle Valve
4F-MPNAR-T-SS	15P4082	PAE P Series Needle Valve
4F-MPNAR-T-SS-LTB	15P4082-B	PAE P Series Needle Valve
4F-MPNLB-T-SS	15P4071	PAE P Series Needle Valve
4F-MPNLB-T-SS-LTB	15P4071-B	PAE P Series Needle Valve
4F-MPNLR-T-SS	15P4081	PAE P Series Needle Valve
4F-MPNLR-T-SS-LTB	15P4081-B	PAE P Series Needle Valve
4F-MPNXBD-T-SS	15P4075	PAE P Series Needle Valve
4F-MPNXBD-T-SS-LTB	15P4075-B	PAE P Series Needle Valve
4F-MPNXBI-T-SS	15P4073	PAE P Series Needle Valve
4F-MPNXBI-T-SS-LTB	15P4073-B	PAE P Series Needle Valve
4F-MPNXBO-T-SS	15P4074	PAE P Series Needle Valve
4F-MPNXBO-T-SS-LTB	15P4074-B	PAE P Series Needle Valve
4F-MPNXRD-T-SS	15P4085	PAE P Series Needle Valve
4F-MPNXRD-T-SS-LTB	15P4085-B	PAE P Series Needle Valve
4F-MPNXRI-T-SS	15P4083	PAE P Series Needle Valve
4F-MPNXRI-T-SS-LTB	15P4083-B	PAE P Series Needle Valve
4F-MPNXRO-T-SS	15P4084	PAE P Series Needle Valve
4F-MPNXRO-T-SS-LTB	15P4084-B	PAE P Series Needle Valve
4MP7-MANLB-G-SS-HT	4MP7-MANLB-GY-SS-HT	Pages 44-56
4MP7-MPBLPK-BN-SSP	4MP7-MAB4LPK-BN-SSP	Pages 63-76
4MP7-MPBLPK-BN-SSP-LD	4MP7-MAB4LPK-BN-SSP-LD	Pages 63-76
4MP7-MPBLPK-EPR-SSP	4MP7-MAB4LPK-EPR-SSP	Pages 63-76
4MP7-MPBLPK-EPR-SSP-LD	4MP7-MAB4LPK-EPR-SSP-LD	Pages 63-76

Note: Catalogs with a "**PAE**" (Parker Autoclave Engineers) reference can be viewed at autoclave.com or by downloading our PAE Catalog Hub...Click here!

MPI™ Part Numbers Sold Prior to July 2015 (includes Catalog 4234)	New Part Number	Additional Catalog Needed
4MP7-MPBLPK-KZ-SSP	4MP7-MAB4LPK-KZ-SSP	Pages 63-76
4MP7-MPBLPK-KZ-SSP-LD	4MP7-MAB4LPK-KZ-SSP-LD	Pages 63-76
4MP7-MPBLPK-V-SSP	4MP7-MAB4LPK-V-SSP	Pages 63-76
4MP7-MPBLPK-V-SSP-LD	4MP7-MAB4LPK-V-SSP-LD	Pages 63-76
4MP7-MPBXPK-BN-SSP	4MP7-MAB3XPK-BN-SSP	Pages 63-76
4MP7-MPBXPKD-BN-SSP	4MP7-MAB3XPKD-BN-SSP	Pages 63-76
4MP7-MPBXPKD-EPR-SSP	4MP7-MAB3XPKD-EPR-SSP	Pages 63-76
4MP7-MPBXPKD-KZ-SSP	4MP7-MAB3XPKD-KZ-SSP	Pages 63-76
4MP7-MPBXPKD-V-SSP	4MP7-MAB3XPKD-V-SSP	Pages 63-76
4MP7-MPBXPK-EPR-SSP	4MP7-MAB3XPK-EPR-SSP	Pages 63-76
4MP7-MPBXPK-KZ-SSP	4MP7-MAB3XPK-KZ-SSP	Pages 63-76
4MP7-MPBXPK-V-SSP	4MP7-MAB3XPK-V-SSP	Pages 63-76
4MP7-MPCBL-5-SS	See 4MP7-MACBL-20-SS	Pages 83
4MP7-MPCL-5-KZ-SS	See 4MP7-MACL-20-KZ-SS	Pages 83
4MP7-MPCL-5-V-SS	See 4MP7-MACL-20-V-SS	Pages 83
4MP7-MPFL-0.5-SS	4MP7-MAFL-0.5-SS	Pages 81-82
4MP7-MPFL-100-SS	4MP7-MAFCL-100-SS	Pages 81-82
4MP7-MPFL-10-SS	4MP7-MAFCL-10-SS	Pages 81-82
4MP7-MPFL-2-SS	4MP7-MAFCL-2-SS	Pages 81-82
4MP7-MPFL-35-SS	4MP7-MAFCL-35-SS	Pages 81-82
4MP7-MPFL-5-SS	4MP7-MAFCL-5-SS	Pages 81-82
4MP7-MPFL-65-SS	4MP7-MAFCL-65-SS	Pages 81-82
4MP7-MPNAB-G-SS-HT	4MP7-MANAB-GY-SS-HT	Pages 44-56
4MP7-MPNABR-G-SS-HT	4MP7-MANABR-GY-SS-HT	Pages 44-56
4MP7-MPNABR-T-SS	4MP7-MANABR-T-SS	Pages 44-56
4MP7-MPNAB-T-SS	4MP7-MANAB-T-SS	Pages 44-56
4MP7-MPNAR-G-SS-HT	4MP7-MANAR-GY-SS-HT	Pages 44-56
4MP7-MPNARR-G-SS-HT	4MP7-MANARR-GY-SS-HT	Pages 44-56
4MP7-MPNARR-T-SS	4MP7-MANARR-T-SS	Pages 44-56
4MP7-MPNAR-T-SS	4MP7-MANAR-T-SS	Pages 44-56
4MP7-MPNLB-G-SS-HT	4MP7-MANLB-GY-SS-HT	Pages 44-56
4MP7-MPNLB-T-SS	4MP7-MANLB-T-SS	Pages 44-56
4MP7-MPNLB-T-SS-HYD	4MP7-MANLB-T-SS	Pages 44-56
4MP7-MPNLR-G-SS-HT	4MP7-MANLR-GY-SS-HT	Pages 44-56
4MP7-MPNLR-T-SS	4MP7-MANLR-T-SS	Pages 44-56
4MP7-MPNXBD-G-SS-HT	4MP7-MANXBD-GY-SS-HT	Pages 44-56
4MP7-MPNXBD-T-SS	4MP7-MANXBD-T-SS	Pages 44-56
4MP7-MPNXBI-G-SS-HT	4MP7-MANXBI-GY-SS-HT	Pages 44-56
4MP7-MPNXBI-T-SS	4MP7-MANXBI-T-SS	Pages 44-56
4MP7-MPNXBO-G-SS-HT	4MP7-MANXBO-GY-SS-HT	Pages 44-56
4MP7-MPNXBO-T-SS	4MP7-MANXBO-T-SS	Pages 44-56
4MP7-MPNXRD-G-SS-HT	4MP7-MANXRD-GY-SS-HT	Pages 44-56
4MP7-MPNXRD-T-SS	4MP7-MANXRD-T-SS	Pages 44-56
4MP7-MPNXRI-G-SS-HT	4MP7-MANXRI-GY-SS-HT	Pages 44-56
4MP7-MPNXRI-T-SS	4MP7-MANXRI-T-SS	Pages 44-56
4MP7-MPNXRO-G-SS-HT	4MP7-MANXRO-GY-SS-HT	Pages 44-56
4MP7-MPNXRO-T-SS	4MP7-MANXRO-T-SS	Pages 44-56
6F-MAB3XPK-BN-SSP	3B3S15P6-BO	PAE Ball Valve NPT Conn.
6F-MAB3XPKD-BN-SSP	3BD3S15P6-BO	PAE Ball Valve NPT Conn.
6F-MAB3XPKD-EPR-SSP	3BD3S15P6-EPR	PAE Ball Valve NPT Conn.
6F-MAB3XPKD-KZ-SSP	3BD3S15P6-HT	PAE Ball Valve NPT Conn.
6F-MAB3XPKD-V-SSP	3BD3S15P6	PAE Ball Valve NPT Conn.
6F-MAB3XPK-EPR-SSP	3B3S15P6-EPR	PAE Ball Valve NPT Conn.
6F-MAB3XPK-KZ-SSP	3B3S15P6-HT	PAE Ball Valve NPT Conn.
6F-MAB3XPK-V-SSP	3B3S15P6	PAE Ball Valve NPT Conn.
6F-MAB4LPK-BN-SSP	2B4S15P6-BO	PAE Ball Valve NPT Conn.
6F-MAB4LPK-EPR-SSP	2B4S15P6-EPR	PAE Ball Valve NPT Conn.
6F-MAB4LPK-KZ-SSP	2B4S15P6-HT	PAE Ball Valve NPT Conn.
6F-MAB4LPK-V-SSP	2B4S15P6	PAE Ball Valve NPT Conn.
6F-MAB6LPK-BN-SSP	2B6S15P6-BO	PAE Ball Valve NPT Conn.
6F-MAB6LPK-EPR-SSP	2B6S15P6-EPR	PAE Ball Valve NPT Conn.
6F-MAB6LPK-KZ-SSP	2B6S15P6-HT	PAE Ball Valve NPT Conn.
6F-MAB6LPK-V-SSP	2B6S15P6	PAE Ball Valve NPT Conn.
6F-MAB6XPK-BN-SSP	3B6S15P6-BO	PAE Ball Valve NPT Conn.
6F-MAB6XPKD-BN-SSP	3BD6S15P6-BO	PAE Ball Valve NPT Conn.
6F-MAB6XPKD-EPR-SSP	3BD6S15P6-EPR	PAE Ball Valve NPT Conn.
6F-MAB6XPKD-KZ-SSP	3BD6S15P6-HT	PAE Ball Valve NPT Conn.
6F-MAB6XPKD-V-SSP	3BD6S15P6	PAE Ball Valve NPT Conn.
6F-MAB6XPK-EPR-SSP	3B6S15P6-EPR	PAE Ball Valve NPT Conn.
6F-MAB6XPK-KZ-SSP	3B6S15P6-HT	PAE Ball Valve NPT Conn.
6F-MAB6XPK-V-SSP	3B6S15P6	PAE Ball Valve NPT Conn.
6F-MACBL-20-SS	CPB6600	PAE P Series Fitting/Tubing

MPI™ Part Numbers Sold Prior to July 2015 (includes Catalog 4234)	New Part Number	Additional Catalog Needed
6F-MACL-20-V-SS	CPO6600	PAE P Series Fitting/Tubing
6F-MADBB6LPK-BN-SS	6DB15P6P4-BO	PAE Ball Valve NPT Conn.
6F-MADBB6LPK-EPR-SS	6DB15P6P4-EPR	PAE Ball Valve NPT Conn.
6F-MADBB6LPK-KZ-SS	6DB15P6P4-HT	PAE Ball Valve NPT Conn.
6F-MADBB6LPK-V-SS	6DB15P6P4	PAE Ball Valve NPT Conn.
6F-MANAB-T-SS	15P6083	PAE P Series Needle Valve
6F-MANAR-T-SS	15P6082	PAE P Series Needle Valve
6F-MANLB-T-SS	15P6071	PAE P Series Needle Valve
6F-MANLR-T-SS	15P6081	PAE P Series Needle Valve
6F-MANXBD-T-SS	15P6075	PAE P Series Needle Valve
6F-MANXBI-T-SS	15P6073	PAE P Series Needle Valve
6F-MANXBO-T-SS	15P6074	PAE P Series Needle Valve
6F-MANXRD-T-SS	15P6085	PAE P Series Needle Valve
6F-MANXRI-T-SS	15P6083	PAE P Series Needle Valve
6F-MANXRO-T-SS	15P6084	PAE P Series Needle Valve
6F-MPBLPK-BN-SSP	2B4S15P6-BO	PAE Ball Valve NPT Conn.
6F-MPBLPK-EPR-SSP	2B4S15P6-EPR	PAE Ball Valve NPT Conn.
6F-MPBLPKH-BN-SSP	2B6S15P6-BO	PAE Ball Valve NPT Conn.
6F-MPBLPKH-EPR-SSP	2B6S15P6-EPR	PAE Ball Valve NPT Conn.
6F-MPBLPKH-KZ-SSP	2B6S15P6-HT	PAE Ball Valve NPT Conn.
6F-MPBLPKH-V-SSP	2B6S15P6	PAE Ball Valve NPT Conn.
6F-MPBLPK-KZ-SSP	2B4S15P6-HT	PAE Ball Valve NPT Conn.
6F-MPBLPK-V-SSP	2B4S15P6	PAE Ball Valve NPT Conn.
6F-MPBXPK-BN-SSP	3B3S15P6-BO	PAE Ball Valve NPT Conn.
6F-MPBXPKD-BN-SSP	3BD3S15P6-BO	PAE Ball Valve NPT Conn.
6F-MPBXPKD-EPR-SSP	3BD3S15P6-EPR	PAE Ball Valve NPT Conn.
6F-MPBXPKDH-BN-SSP	3BD6S15P6-BO	PAE Ball Valve NPT Conn.
6F-MPBXPKDH-EPR-SSP	3BD6S15P6-EPR	PAE Ball Valve NPT Conn.
6F-MPBXPKDH-KZ-SSP	3BD6S15P6-HT	PAE Ball Valve NPT Conn.
6F-MPBXPKDH-V-SSP	3BD6S15P6	PAE Ball Valve NPT Conn.
6F-MPBXPKD-KZ-SSP	3BD3S15P6-HT	PAE Ball Valve NPT Conn.
6F-MPBXPKD-V-SSP	3BD3S15P6	PAE Ball Valve NPT Conn.
6F-MPBXPK-EPR-SSP	3B3S15P6-EPR	PAE Ball Valve NPT Conn.
6F-MPBXPKH-BN-SSP	3B6S15P6-BO	PAE Ball Valve NPT Conn.
6F-MPBXPKH-EPR-SSP	3B6S15P6-EPR	PAE Ball Valve NPT Conn.
6F-MPBXPKH-KZ-SSP	3B6S15P6-HT	PAE Ball Valve NPT Conn.
6F-MPBXPKH-V-SSP	3B6S15P6	PAE Ball Valve NPT Conn.
6F-MPBXPK-KZ-SSP	3B3S15P6-HT	PAE Ball Valve NPT Conn.
6F-MPBXPK-V-SSP	3B3S15P6	PAE Ball Valve NPT Conn.
6F-MPCBL-5-SS	CPB6600	PAE P Series Fitting/Tubing
6F-MPCL-5-V-SS	CPO6600	PAE P Series Fitting/Tubing
6F-MPNAB-T-SS	15P6083	PAE P Series Needle Valve
6F-MPNAR-T-SS	15P6082	PAE P Series Needle Valve
6F-MPNLB-T-SS	15P6071	PAE P Series Needle Valve
6F-MPNLR-T-SS	15P6081	PAE P Series Needle Valve
6F-MPNXBD-T-SS	15P6075	PAE P Series Needle Valve
6F-MPNXBI-T-SS	15P6073	PAE P Series Needle Valve
6F-MPNXBO-T-SS	15P6074	PAE P Series Needle Valve
6F-MPNXRD-T-SS	15P6085	PAE P Series Needle Valve
6F-MPNXRI-T-SS	15P6083	PAE P Series Needle Valve
6F-MPNXRO-T-SS	15P6084	PAE P Series Needle Valve
6MP7-MPBLPK-BN-SSP	6MP7-MAB4LPK-BN-SSP	Pages 60-76
6MP7-MPBLPK-BN-SSP-LD	6MP7-MAB4LPK-BN-SSP-LD	Pages 60-76
6MP7-MPBLPK-EPR-SSP	6MP7-MAB4LPK-EPR-SSP	Pages 60-76
6MP7-MPBLPK-EPR-SSP-LD	6MP7-MAB4LPK-EPR-SSP-LD	Pages 60-76
6MP7-MPBLPKH-V-SSP	6MP7-MAB6LPK-V-SSP	Pages 60-76
6MP7-MPBLPK-KZ-SSP	6MP7-MAB4LPK-KZ-SSP	Pages 60-76
6MP7-MPBLPK-KZ-SSP-LD	6MP7-MAB4LPK-KZ-SSP-LD	Pages 60-76
6MP7-MPBLPK-V-SSP	6MP7-MAB4LPK-V-SSP	Pages 60-76
6MP7-MPBLPK-V-SSP-HYD	6MP7-MAB4LPK-V-SSP	Pages 60-76
6MP7-MPBLPK-V-SSP-LD	6MP7-MAB4LPK-V-SSP-LD	Pages 60-76
6MP7-MPBXPK-BN-SSP	6MP7-MAB3XPK-BN-SSP	Pages 60-76
6MP7-MPBXPK-BN-SSP-LD	6MP7-MAB3XPK-BN-SSP-LD	Pages 60-76
6MP7-MPBXPKD-BN-SSP	6MP7-MAB3XPKD-BN-SSP	Pages 60-76
6MP7-MPBXPKD-EPR-SSP	6MP7-MAB3XPKD-EPR-SSP	Pages 60-76
6MP7-MPBXPKDH-BN-SSP	6MP7-MAB6XPKD-BN-SSP	Pages 60-76
6MP7-MPBXPKDH-EPR-SSP	6MP7-MAB6XPKD-EPR-SSP	Pages 52-69
6MP7-MPBXPKDH-KZ-SSP	6MP7-MAB6XPKD-KZ-SSP	Pages 60-76
6MP7-MPBXPKDH-V-SSP	6MP7-MAB6XPKD-V-SSP	Pages 60-76
6MP7-MPBXPKD-KZ-SSP	6MP7-MAB3XPKD-KZ-SSP	Pages 60-76
6MP7-MPBXPKD-V-SSP	6MP7-MAB3XPKD-V-SSP	Pages 60-76
6MP7-MPBXPK-EPR-SSP	6MP7-MAB3XPK-EPR-SSP	Pages 60-76

Note: Catalogs with a "**PAE**" (Parker Autoclave Engineers) reference can be viewed at **autoclave.com** or by downloading our PAE Catalog Hub…**Click here**!

MPI™ Part Numbers Sold Prior to July 2015 (includes Catalog 4234)	New Part Number	Additional Catalog Needed
4MP7-MPBLPK-KZ-SSP	4MP7-MAB4LPK-KZ-SSP	Pages 60-76
4MP7-MPBLPK-KZ-SSP-LD	4MP7-MAB4LPK-KZ-SSP-LD	Pages 60-76
4MP7-MPBLPK-V-SSP	4MP7-MAB4LPK-V-SSP	Pages 60-76
4MP7-MPBLPK-V-SSP-LD	4MP7-MAB4LPK-V-SSP-LD	Pages 60-76
4MP7-MPBXPK-BN-SSP	4MP7-MAB3XPK-BN-SSP	Pages 60-76
4MP7-MPBXPKD-BN-SSP	4MP7-MAB3XPKD-BN-SSP	Pages 60-76
4MP7-MPBXPKD-EPR-SSP	4MP7-MAB3XPKD-EPR-SSP	Pages 60-76
4MP7-MPBXPKD-KZ-SSP	4MP7-MAB3XPKD-KZ-SSP	Pages 60-76
4MP7-MPBXPKD-V-SSP	4MP7-MAB3XPKD-V-SSP	Pages 60-76
4MP7-MPBXPK-EPR-SSP	4MP7-MAB3XPK-EPR-SSP	Pages 60-76
4MP7-MPBXPK-KZ-SSP	4MP7-MAB3XPK-KZ-SSP	Pages 60-76
4MP7-MPBXPK-V-SSP	4MP7-MAB3XPK-V-SSP	Pages 60-76
4MP7-MPCBL-5-SS	See 4MP7-MACBL-20-SS	Pages 83
4MP7-MPCL-5-KZ-SS	See 4MP7-MACL-20-KZ-SS	Pages 83
4MP7-MPCL-5-V-SS	See 4MP7-MACL-20-V-SS	Pages 83
4MP7-MPFL-0.5-SS	4MP7-MAFL-0.5-SS	Pages 81-82
4MP7-MPFL-100-SS	4MP7-MAFCL-100-SS	Pages 81-82
4MP7-MPFL-10-SS	4MP7-MAFCL-10-SS	Pages 81-82
4MP7-MPFL-2-SS	4MP7-MAFCL-2-SS	Pages 81-82
4MP7-MPFL-35-SS	4MP7-MAFCL-35-SS	Pages 81-82
4MP7-MPFL-5-SS	4MP7-MAFCL-5-SS	Pages 81-82
4MP7-MPFL-65-SS	4MP7-MAFCL-65-SS	Pages 81-82
4MP7-MPNAB-G-SS-HT	4MP7-MANAB-GY-SS-HT	Pages 44-56
4MP7-MPNABR-G-SS-HT	4MP7-MANABR-GY-SS-HT	Pages 44-56
4MP7-MPNABR-T-SS	4MP7-MANABR-T-SS	Pages 44-56
4MP7-MPNAB-T-SS	4MP7-MANAB-T-SS	Pages 44-56
4MP7-MPNAR-G-SS-HT	4MP7-MANAR-GY-SS-HT	Pages 44-56
4MP7-MPNARR-G-SS-HT	4MP7-MANARR-GY-SS-HT	Pages 44-56
4MP7-MPNARR-T-SS	4MP7-MANARR-T-SS	Pages 44-56
4MP7-MPNAR-T-SS	4MP7-MANAR-T-SS	Pages 44-56
4MP7-MPNLB-G-SS-HT	4MP7-MANLB-GY-SS-HT	Pages 44-56
4MP7-MPNLB-T-SS	4MP7-MANLB-T-SS	Pages 44-56
4MP7-MPNLB-T-SS-HYD	4MP7-MANLB-T-SS	Pages 44-56
4MP7-MPNLR-G-SS-HT	4MP7-MANLR-GY-SS-HT	Pages 44-56
4MP7-MPNLR-T-SS	4MP7-MANLR-T-SS	Pages 44-56
4MP7-MPNXBD-G-SS-HT	4MP7-MANXBD-GY-SS-HT	Pages 44-56
4MP7-MPNXBD-T-SS	4MP7-MANXBD-T-SS	Pages 44-56
4MP7-MPNXBI-G-SS-HT	4MP7-MANXBI-GY-SS-HT	Pages 44-56
4MP7-MPNXBI-T-SS	4MP7-MANXBI-T-SS	Pages 44-56
4MP7-MPNXBO-G-SS-HT	4MP7-MANXBO-GY-SS-HT	Pages 44-56
4MP7-MPNXBO-T-SS	4MP7-MANXBO-T-SS	Pages 44-56
4MP7-MPNXRD-G-SS-HT	4MP7-MANXRD-GY-SS-HT	Pages 44-56
4MP7-MPNXRD-T-SS	4MP7-MANXRD-T-SS	Pages 44-56
4MP7-MPNXRI-G-SS-HT	4MP7-MANXRI-GY-SS-HT	Pages 44-56
4MP7-MPNXRI-T-SS	4MP7-MANXRI-T-SS	Pages 44-56
4MP7-MPNXRO-G-SS-HT	4MP7-MANXRO-GY-SS-HT	Pages 44-56
4MP7-MPNXRO-T-SS	4MP7-MANXRO-T-SS	Pages 44-56
6F-MAB3XPK-BN-SSP	3B3S15P6-BO	PAE Ball Valve NPT Conn.
6F-MAB3XPKD-BN-SSP	3BD3S15P6-BO	PAE Ball Valve NPT Conn.
6F-MAB3XPKD-EPR-SSP	3BD3S15P6-EPR	PAE Ball Valve NPT Conn.
6F-MAB3XPKD-KZ-SSP	3BD3S15P6-HT	PAE Ball Valve NPT Conn.
6F-MAB3XPKD-V-SSP	3BD3S15P6	PAE Ball Valve NPT Conn.
6F-MAB3XPK-EPR-SSP	3B3S15P6-EPR	PAE Ball Valve NPT Conn.
6F-MAB3XPK-KZ-SSP	3B3S15P6-HT	PAE Ball Valve NPT Conn.
6F-MAB3XPK-V-SSP	3B3S15P6	PAE Ball Valve NPT Conn.
6F-MAB4LPK-BN-SSP	2B4S15P6-BO	PAE Ball Valve NPT Conn.
6F-MAB4LPK-EPR-SSP	2B4S15P6-EPR	PAE Ball Valve NPT Conn.
6F-MAB4LPK-KZ-SSP	2B4S15P6-HT	PAE Ball Valve NPT Conn.
6F-MAB4LPK-V-SSP	2B4S15P6	PAE Ball Valve NPT Conn.
6F-MAB6LPK-BN-SSP	2B6S15P6-BO	PAE Ball Valve NPT Conn.
6F-MAB6LPK-EPR-SSP	2B6S15P6-EPR	PAE Ball Valve NPT Conn.
6F-MAB6LPK-KZ-SSP	2B6S15P6-HT	PAE Ball Valve NPT Conn.
6F-MAB6LPK-V-SSP	2B6S15P6	PAE Ball Valve NPT Conn.
6F-MAB6XPK-BN-SSP	3B6S15P6-BO	PAE Ball Valve NPT Conn.
6F-MAB6XPKD-BN-SSP	3BD6S15P6-BO	PAE Ball Valve NPT Conn.
6F-MAB6XPKD-EPR-SSP	3BD6S15P6-EPR	PAE Ball Valve NPT Conn.
6F-MAB6XPKD-KZ-SSP	3BD6S15P6-HT	PAE Ball Valve NPT Conn.
6F-MAB6XPKD-V-SSP	3BD6S15P6	PAE Ball Valve NPT Conn.
6F-MAB6XPK-EPR-SSP	3B6S15P6-EPR	PAE Ball Valve NPT Conn.
6F-MAB6XPK-KZ-SSP	3B6S15P6-HT	PAE Ball Valve NPT Conn.
6F-MAB6XPK-V-SSP	3B6S15P6	PAE Ball Valve NPT Conn.
6F-MACBL-20-SS	CPB6600	PAE P Series Fitting/Tubing

MPI™ Part Numbers Sold Prior to July 2015 (includes Catalog 4234)	New Part Number	Additional Catalog Needed
6F-MACL-20-V-SS	CPO6600	PAE P Series Fitting/Tubing
6F-MADBB6LPK-BN-SS	6DB15P6P4-BO	PAE Ball Valve NPT Conn.
6F-MADBB6LPK-EPR-SS	6DB15P6P4-EPR	PAE Ball Valve NPT Conn.
6F-MADBB6LPK-KZ-SS	6DB15P6P4-HT	PAE Ball Valve NPT Conn.
6F-MADBB6LPK-V-SS	6DB15P6P4	PAE Ball Valve NPT Conn.
6F-MANAB-T-SS	15P6083	PAE P Series Needle Valve
6F-MANAR-T-SS	15P6082	PAE P Series Needle Valve
6F-MANLB-T-SS	15P6071	PAE P Series Needle Valve
6F-MANLR-T-SS	15P6081	PAE P Series Needle Valve
6F-MANXBD-T-SS	15P6075	PAE P Series Needle Valve
6F-MANXBI-T-SS	15P6073	PAE P Series Needle Valve
6F-MANXBO-T-SS	15P6074	PAE P Series Needle Valve
6F-MANXRD-T-SS	15P6085	PAE P Series Needle Valve
6F-MANXRI-T-SS	15P6083	PAE P Series Needle Valve
6F-MANXRO-T-SS	15P6084	PAE P Series Needle Valve
6F-MPBLPK-BN-SSP	2B4S15P6-BO	PAE Ball Valve NPT Conn.
6F-MPBLPK-EPR-SSP	2B4S15P6-EPR	PAE Ball Valve NPT Conn.
6F-MPBLPKH-BN-SSP	2B6S15P6-BO	PAE Ball Valve NPT Conn.
6F-MPBLPKH-EPR-SSP	2B6S15P6-EPR	PAE Ball Valve NPT Conn.
6F-MPBLPKH-KZ-SSP	2B6S15P6-HT	PAE Ball Valve NPT Conn.
6F-MPBLPKH-V-SSP	2B6S15P6	PAE Ball Valve NPT Conn.
6F-MPBLPK-KZ-SSP	2B4S15P6-HT	PAE Ball Valve NPT Conn.
6F-MPBLPK-V-SSP	2B4S15P6	PAE Ball Valve NPT Conn.
6F-MPBXPK-BN-SSP	3B3S15P6-BO	PAE Ball Valve NPT Conn.
6F-MPBXPKD-BN-SSP	3BD3S15P6-BO	PAE Ball Valve NPT Conn.
6F-MPBXPKD-EPR-SSP	3BD3S15P6-EPR	PAE Ball Valve NPT Conn.
6F-MPBXPKDH-BN-SSP	3BD6S15P6-BO	PAE Ball Valve NPT Conn.
6F-MPBXPKDH-EPR-SSP	3BD6S15P6-EPR	PAE Ball Valve NPT Conn.
6F-MPBXPKDH-KZ-SSP	3BD6S15P6-HT	PAE Ball Valve NPT Conn.
6F-MPBXPKDH-V-SSP	3BD6S15P6	PAE Ball Valve NPT Conn.
6F-MPBXPKD-KZ-SSP	3BD3S15P6-HT	PAE Ball Valve NPT Conn.
6F-MPBXPKD-V-SSP	3BD3S15P6	PAE Ball Valve NPT Conn.
6F-MPBXPK-EPR-SSP	3B3S15P6-EPR	PAE Ball Valve NPT Conn.
6F-MPBXPKH-BN-SSP	3B6S15P6-BO	PAE Ball Valve NPT Conn.
6F-MPBXPKH-EPR-SSP	3B6S15P6-EPR	PAE Ball Valve NPT Conn.
6F-MPBXPKH-KZ-SSP	3B6S15P6-HT	PAE Ball Valve NPT Conn.
6F-MPBXPKH-V-SSP	3B6S15P6	PAE Ball Valve NPT Conn.
6F-MPBXPK-KZ-SSP	3B3S15P6-HT	PAE Ball Valve NPT Conn.
6F-MPBXPK-V-SSP	3B3S15P6	PAE Ball Valve NPT Conn.
6F-MPCBL-5-SS	CPB6600	PAE P Series Fitting/Tubing
6F-MPCL-5-V-SS	CPO6600	PAE P Series Fitting/Tubing
6F-MPNAB-T-SS	15P6083	PAE P Series Needle Valve
6F-MPNAR-T-SS	15P6082	PAE P Series Needle Valve
6F-MPNLB-T-SS	15P6071	PAE P Series Needle Valve
6F-MPNLR-T-SS	15P6081	PAE P Series Needle Valve
6F-MPNXBD-T-SS	15P6075	PAE P Series Needle Valve
6F-MPNXBI-T-SS	15P6073	PAE P Series Needle Valve
6F-MPNXBO-T-SS	15P6074	PAE P Series Needle Valve
6F-MPNXRD-T-SS	15P6085	PAE P Series Needle Valve
6F-MPNXRI-T-SS	15P6083	PAE P Series Needle Valve
6F-MPNXRO-T-SS	15P6084	PAE P Series Needle Valve
6MP7-MPBLPK-BN-SSP	6MP7-MAB4LPK-BN-SSP	Pages 60-76
6MP7-MPBLPK-BN-SSP-LD	6MP7-MAB4LPK-BN-SSP-LD	Pages 60-76
6MP7-MPBLPK-EPR-SSP	6MP7-MAB4LPK-EPR-SSP	Pages 60-76
6MP7-MPBLPK-EPR-SSP-LD	6MP7-MAB4LPK-EPR-SSP-LD	Pages 60-76
6MP7-MPBLPKH-V-SSP	6MP7-MAB6LPK-V-SSP	Pages 60-76
6MP7-MPBLPK-KZ-SSP	6MP7-MAB4LPK-KZ-SSP	Pages 60-76
6MP7-MPBLPK-KZ-SSP-LD	6MP7-MAB4LPK-KZ-SSP-LD	Pages 60-76
6MP7-MPBLPK-V-SSP	6MP7-MAB4LPK-V-SSP	Pages 60-76
6MP7-MPBLPK-V-SSP-HYD	6MP7-MAB4LPK-V-SSP	Pages 60-76
6MP7-MPBLPK-V-SSP-LD	6MP7-MAB4LPK-V-SSP-LD	Pages 60-76
6MP7-MPBXPK-BN-SSP	6MP7-MAB3XPK-BN-SSP	Pages 60-76
6MP7-MPBXPK-BN-SSP-LD	6MP7-MAB3XPK-BN-SSP-LD	Pages 60-76
6MP7-MPBXPKD-BN-SSP	6MP7-MAB3XPKD-BN-SSP	Pages 60-76
6MP7-MPBXPKD-EPR-SSP	6MP7-MAB3XPKD-EPR-SSP	Pages 60-76
6MP7-MPBXPKDH-BN-SSP	6MP7-MAB6XPKD-BN-SSP	Pages 60-76
6MP7-MPBXPKDH-EPR-SSP	6MP7-MAB6XPKD-EPR-SSP	Pages 60-76
6MP7-MPBXPKDH-KZ-SSP	6MP7-MAB6XPKD-KZ-SSP	Pages 60-76
6MP7-MPBXPKDH-V-SSP	6MP7-MAB6XPKD-V-SSP	Pages 60-76
6MP7-MPBXPKD-KZ-SSP	6MP7-MAB3XPKD-KZ-SSP	Pages 60-76
6MP7-MPBXPKD-V-SSP	6MP7-MAB3XPKD-V-SSP	Pages 60-76
6MP7-MPBXPK-EPR-SSP	6MP7-MAB3XPK-EPR-SSP	Pages 60-76

Note: Catalogs with a "**PAE**" (Parker Autoclave Engineers) reference can be viewed at **autoclave.com** or by downloading our PAE Catalog Hub…**Click here**!

MPI™ Part Numbers Sold Prior to July 2015 (includes Catalog 4234)	New Part Number	Additional Catalog Needed
6MP7-MPBXPKH-BN-SSP	6MP7-MAB6XPK-BN-SSP	Pages 60-76
6MP7-MPBXPKH-BN-SSP-LD	6MP7-MAB6XPK-BN-SSP-LD	Pages 60-76
6MP7-MPBXPKH-EPR-SSP	6MP7-MAB6XPK-EPR-SSP	Pages 60-76
6MP7-MPBXPKH-EPR-SSP-LD	6MP7-MAB6XPK-EPR-SSP-LD	Pages 60-76
6MP7-MPBXPKH-KZ-SSP	6MP7-MAB6XPK-KZ-SSP	Pages 60-76
6MP7-MPBXPKH-KZ-SSP-LD	6MP7-MAB6XPK-KZ-SSP-LD	Pages 60-76
6MP7-MPBXPKH-V-SSP	6MP7-MAB6XPK-V-SSP	Pages 60-76
6MP7-MPBXPKH-V-SSP-LD	6MP7-MAB6XPK-V-SSP-LD	Pages 60-76
6MP7-MPBXPK-KZ-SSP	6MP7-MAB3XPK-KZ-SSP	Pages 60-76
6MP7-MPBXPK-KZ-SSP-LD	6MP7-MAB3XPK-KZ-SSP-LD	Pages 60-76
6MP7-MPBXPK-V-SSP	6MP7-MAB3XPK-V-SSP	Pages 60-76
6MP7-MPCBL-5-SS	See 6MP7-MACBL-20-SS	Page 83
6MP7-MPCL-5-BN-SS	See 6MP7-MACL-20-BN-SS	Page 83
6MP7-MPCL-5-V-SS	See 6MP7-MACL-20-V-SS	Page 83
6MP7-MPFL-100-SS	6MP7-MAFCL-100-SS	Pages 81-82
6MP7-MPFL-35-SS	6MP7-MAFCL-35-SS	Pages 81-82
6MP7-MPFL-40-SS	See 6MP7-MAFCL-35-SS	Pages 81-82
6MP7-MPFL-5-SS	6MP7-MAFCL-5-SS	Pages 81-82
6MP7-MPFL-65-SS	6MP7-MAFCL-65-SS	Pages 81-82
6MP7-MPGV-V-SS	6MP7-MAGV-T-SS	Page 59
6MP7-MPNAB-G-SS-HT	6MP7-MANAB-GY-SS-HT	Pages 44-56
6MP7-MPNABR-G-SS-HT	6MP7-MANABR-GY-SS-HT	Pages 44-56
6MP7-MPNABR-T-SS	6MP7-MANABR-T-SS	Pages 44-56
6MP7-MPNAB-T-SS	6MP7-MANAB-T-SS	Pages 44-56
6MP7-MPNAR-G-SS-HT	6MP7-MANAR-GY-SS-HT	Pages 44-56
6MP7-MPNARR-G-SS-HT	6MP7-MANARR-GY-SS-HT	Pages 44-56
6MP7-MPNARR-T-SS	6MP7-MANARR-T-SS	Pages 44-56
6MP7-MPNAR-T-SS	6MP7-MANAR-T-SS	Pages 44-56
6MP7-MPNLB-G-SS-HT	6MP7-MANLB-GY-SS-HT	Pages 44-56
6MP7-MPNLB-T-SS	6MP7-MANLB-T-SS	Pages 44-56
6MP7-MPNLR-G-SS-HT	6MP7-MANLR-GY-SS-HT	Pages 44-56
6MP7-MPNLR-T-SS	6MP7-MANLR-T-SS	Pages 44-56
6MP7-MPNXBD-G-SS-HT	6MP7-MANXBD-GY-SS-HT	Pages 44-56
6MP7-MPNXBD-T-SS	6MP7-MANXBD-T-SS	Pages 44-56
6MP7-MPNXBI-G-SS-HT	6MP7-MANXBI-GY-SS-HT	Pages 44-56
6MP7-MPNXBI-T-SS	6MP7-MANXBI-T-SS	Pages 44-56
6MP7-MPNXBO-G-SS-HT	6MP7-MANXBO-GY-SS-HT	Pages 44-56
6MP7-MPNXBO-T-SS	6MP7-MANXBO-T-SS	Pages 44-56
6MP7-MPNXRD-G-SS-HT	6MP7-MANXRD-GY-SS-HT	Pages 44-56
6MP7-MPNXRD-T-SS	6MP7-MANXRD-T-SS	Pages 44-56
6MP7-MPNXRI-G-SS-HT	6MP7-MANXRI-GY-SS-HT	Pages 44-56
6MP7-MPNXRI-T-SS	6MP7-MANXRI-T-SS	Pages 44-56
6MP7-MPNXRO-G-SS-HT	6MP7-MANXRO-GY-SS-HT	Pages 44-56
6MP7-MPNXRO-T-SS	6MP7-MANXRO-T-SS	Pages 44-56
6T7-MPBV-V-SS	6T7-MABV-V-SS	Page 60
8F-MAB12LPK-BN-SSP	2B12S15P8-BO	PAE Ball Valve NPT Conn.
8F-MAB12LPK-EPR-SSP	2B12S15P8-EPR	PAE Ball Valve NPT Conn.
8F-MAB12LPK-KZ-SSP	2B12S15P8-C	PAE Ball Valve NPT Conn.
8F-MAB12LPK-V-SSP	2B12S15P8	PAE Ball Valve NPT Conn.
8F-MAB3XPK-BN-SSP	3B3S15P8-BO	PAE Ball Valve NPT Conn.
8F-MAB3XPKD-BN-SSP	3BD3S15P8-BO	PAE Ball Valve NPT Conn.
8F-MAB3XPKD-EPR-SSP	3BD3S15P8-EPR	PAE Ball Valve NPT Conn.
8F-MAB3XPKD-KZ-SSP	3BD3S15P8-HT	PAE Ball Valve NPT Conn.
8F-MAB3XPKD-V-SSP	3BD3S15P8	PAE Ball Valve NPT Conn.
8F-MAB3XPK-EPR-SSP	3B3S15P8-EPR	PAE Ball Valve NPT Conn.
8F-MAB3XPK-KZ-SSP	3B3S15P8-HT	PAE Ball Valve NPT Conn.
8F-MAB3XPK-V-SSP	3B3S15P8	PAE Ball Valve NPT Conn.
8F-MAB4LPK-BN-SSP	2B4S15P8-BO	PAE Ball Valve NPT Conn.
8F-MAB4LPK-EPR-SSP	2B4S15P8-EPR	PAE Ball Valve NPT Conn.
8F-MAB4LPK-KZ-SSP	2B4S15P8-HT	PAE Ball Valve NPT Conn.
8F-MAB4LPK-V-SSP	2B4S15P8	PAE Ball Valve NPT Conn.
8F-MAB6LPK-BN-SSP	2B6S15P8-BO	PAE Ball Valve NPT Conn.
8F-MAB6LPK-EPR-SSP	2B6S15P8-EPR	PAE Ball Valve NPT Conn.
8F-MAB6LPK-KZ-SSP	2B6S15P8-HT	PAE Ball Valve NPT Conn.
8F-MAB6LPK-V-SSP	2B6S15P8	PAE Ball Valve NPT Conn.
8F-MAB6XPK-BN-SSP	3B6S15P8-BO	PAE Ball Valve NPT Conn.
8F-MAB6XPKD-BN-SSP	3BD6S15P8-BO	PAE Ball Valve NPT Conn.
8F-MAB6XPKD-EPR-SSP	3BD6S15P8-EPR	PAE Ball Valve NPT Conn.
8F-MAB6XPKD-KZ-SSP	3BD6S15P8-HT	PAE Ball Valve NPT Conn.
8F-MAB6XPKD-V-SSP	3BD6S15P8	PAE Ball Valve NPT Conn.
8F-MAB6XPK-EPR-SSP	3B6S15P8-EPR	PAE Ball Valve NPT Conn.
8F-MAB6XPK-KZ-SSP	3B6S15P8-HT	PAE Ball Valve NPT Conn.

MPI™ Part Numbers Sold Prior to July 2015 (includes Catalog 4234)	New Part Number	Additional Catalog Needed
8F-MAB6XPK-V-SSP	3B6S15P8	PAE Ball Valve NPT Conn.
8F-MAB8LPK-BN-SSP	2B8S15P8-BO	PAE Ball Valve NPT Conn.
8F-MAB8LPK-EPR-SSP	2B8S15P8-EPR	PAE Ball Valve NPT Conn.
8F-MAB8LPK-KZ-SSP	2B8S15P8-HT	PAE Ball Valve NPT Conn.
8F-MAB8LPK-V-SSP	2B8S15P8	PAE Ball Valve NPT Conn.
8F-MACBL-20-SS	CPB8800	PAE P Series Fitting/Tubing
8F-MACL-20-V-SS	CPO8800	PAE P Series Fitting/ Tubing
8F-MADBB6LPK-BN-SS	6DB15P8P4-BO	PAE Ball Valve NPT Conn.
8F-MADBB6LPK-EPR-SS	6DB15P8P4-EPR	PAE Ball Valve NPT Conn.
8F-MADBB6LPK-KZ-SS	6DB15P8P4-HT	PAE Ball Valve NPT Conn.
8F-MADBB6LPK-V-SS	6DB15P8P4	PAE Ball Valve NPT Conn.
8F-MANAB-T-SS	15P8083	PAE P Series Needle Valve
8F-MANAR-T-SS	15P8082	PAE P Series Needle Valve
8F-MANLB-T-SS	15P8071	PAE P Series Needle Valve
8F-MANLR-T-SS	15P8081	PAE P Series Needle Valve
8F-MANXBD-T-SS	15P8075	PAE P Series Needle Valve
8F-MANXBI-T-SS	15P8073	PAE P Series Needle Valve
8F-MANXBO-T-SS	15P8074	PAE P Series Needle Valve
8F-MANXRD-T-SS	15P8085	PAE P Series Needle Valve
8F-MANXRI-T-SS	15P8083	PAE P Series Needle Valve
8F-MANXRO-T-SS	15P8084	PAE P Series Needle Valve
8F-MPBLPK-BN-SSP	2B4S15P8-BO	PAE Ball Valve NPT Conn.
8F-MPBLPK-EPR-SSP	2B4S15P8-EPR	PAE Ball Valve NPT Conn.
8F-MPBLPKH-BN-SSP	2B6S15P8-BO	PAE Ball Valve NPT Conn.
8F-MPBLPKH-EPR-SSP	2B6S15P8-EPR	PAE Ball Valve NPT Conn.
8F-MPBLPKH-KZ-SSP	2B6S15P8-HT	PAE Ball Valve NPT Conn.
8F-MPBLPKH-V-SSP	2B6S15P8	PAE Ball Valve NPT Conn.
8F-MPBLPK-KZ-SSP	2B4S15P8-HT	PAE Ball Valve NPT Conn.
8F-MPBLPKUH-BN-SSP	2B8S15P8-BO	PAE Ball Valve NPT Conn.
8F-MPBLPKUH-EPR-SSP	2B8S15P8-EPR	PAE Ball Valve NPT Conn.
8F-MPBLPKUH-KZ-SSP	2B8S15P8-HT	PAE Ball Valve NPT Conn.
8F-MPBLPKUH-V-SSP	2B8S15P8	PAE Ball Valve NPT Conn.
8F-MPBLPK-V-SSP	2B4S15P8	PAE Ball Valve NPT Conn.
8F-MPBXPK-BN-SSP	3B3S15P8-BO	PAE Ball Valve NPT Conn.
8F-MPBXPKD-BN-SSP	3BD3S15P8-BO	PAE Ball Valve NPT Conn.
8F-MPBXPKD-EPR-SSP	3BD3S15P8-EPR	PAE Ball Valve NPT Conn.
8F-MPBXPKDH-BN-SSP	3BD6S15P8-BO	PAE Ball Valve NPT Conn.
8F-MPBXPKDH-EPR-SSP	3BD6S15P8-EPR	PAE Ball Valve NPT Conn.
8F-MPBXPKDH-KZ-SSP	3BD6S15P8-HT	PAE Ball Valve NPT Conn.
8F-MPBXPKDH-V-SSP	3BD6S15P8	PAE Ball Valve NPT Conn.
8F-MPBXPKD-KZ-SSP	3BD3S15P8-HT	PAE Ball Valve NPT Conn.
8F-MPBXPKD-V-SSP	3BD3S15P8	PAE Ball Valve NPT Conn.
8F-MPBXPK-EPR-SSP	3B3S15P8-EPR	PAE Ball Valve NPT Conn.
8F-MPBXPKH-BN-SSP	3B6S15P8-BO	PAE Ball Valve NPT Conn.
8F-MPBXPKH-EPR-SSP	3B6S15P8-EPR	PAE Ball Valve NPT Conn.
8F-MPBXPKH-KZ-SSP	3B6S15P8-HT	PAE Ball Valve NPT Conn.
8F-MPBXPKH-V-SSP	3B6S15P8	PAE Ball Valve NPT Conn.
8F-MPBXPK-KZ-SSP	3B3S15P8-HT	PAE Ball Valve NPT Conn.
8F-MPBXPK-V-SSP	3B3S15P8	PAE Ball Valve NPT Conn.
8F-MPCBL-5-SS	CPB8800	PAE P Series Fitting/Tubing
8F-MPCL-5-V-SS	CPO8800	PAE P Series Fitting/Tubing
8F-MPNAB-T-SS	15P8083	PAE P Series Needle Valve
8F-MPNAR-T-SS	15P8082	PAE P Series Needle Valve
8F-MPNLB-T-SS	15P8071	PAE P Series Needle Valve
8F-MPNLR-T-SS	15P8081	PAE P Series Needle Valve
8F-MPNXBD-T-SS	15P8075	PAE P Series Needle Valve
8F-MPNXBI-T-SS	15P8073	PAE P Series Needle Valve
8F-MPNXBO-T-SS	15P8074	PAE P Series Needle Valve
8F-MPNXRD-T-SS	15P8085	PAE P Series Needle Valve
8F-MPNXRI-T-SS	15P8083	PAE P Series Needle Valve
8F-MPNXRO-T-SS	15P8084	PAE P Series Needle Valve
8M8F-MARA-****-SS	5PRVP8083 W/ ADAPTER	PAE P Series Relief Valve
8M8F-MARA-****-SS	10PRVP8083 W/ ADAPTER	PAE P Series Relief Valve
8M8F-MARA-****-SS	15PRVP8083 W/ ADAPTER	PAE P Series Relief Valve
8M8F-MARSA-****-SS	5PRVS8083 W/ ADAPTER	PAE P Series Relief Valve
8M8F-MARSA-****-SS	10PRVS8083 W/ ADAPTER	PAE P Series Relief Valve
8M8F-MARSA-****-SS	15PRVS8083 W/ ADAPTER	PAE P Series Relief Valve
8M8F-MPRA-****-SS	5PRVP8083 W/ ADAPTER	PAE P Series Relief Valve
8M8F-MPRA-****-SS	10PRVP8083 W/ ADAPTER	PAE P Series Relief Valve
8M8F-MPRA-****-SS	15PRVP8083 W/ ADAPTER	PAE P Series Relief Valve
8MP78F-MARA-****-SS	8MP712F-MARA-****-SS	Pages 84-85
8MP78F-MARSA-****-SS	8MP712F-MARSA-****-SS	Pages 86-87

Note: Catalogs with a "**PAE**" (Parker Autoclave Engineers) reference can be viewed at **autoclave.com** or by downloading our PAE Catalog Hub…**Click here**!

MPI™ Part Numbers Sold Prior to July 2015 (includes Catalog 4234)	New Part Number	Additional Catalog Needed
6MP7-MPBXPKH-BN-SSP	6MP7-MAB6XPK-BN-SSP	Pages 60-76
6MP7-MPBXPKH-BN-SSP-LD	6MP7-MAB6XPK-BN-SSP-LD	Pages 60-76
6MP7-MPBXPKH-EPR-SSP	6MP7-MAB6XPK-EPR-SSP	Pages 60-76
6MP7-MPBXPKH-EPR-SSP-LD	6MP7-MAB6XPK-EPR-SSP-LD	Pages 60-76
6MP7-MPBXPKH-KZ-SSP	6MP7-MAB6XPK-KZ-SSP	Pages 60-76
6MP7-MPBXPKH-KZ-SSP-LD	6MP7-MAB6XPK-KZ-SSP-LD	Pages 60-76
6MP7-MPBXPKH-V-SSP	6MP7-MAB6XPK-V-SSP	Pages 60-76
6MP7-MPBXPKH-V-SSP-LD	6MP7-MAB6XPK-V-SSP-LD	Pages 60-76
6MP7-MPBXPK-KZ-SSP	6MP7-MAB3XPK-KZ-SSP	Pages 60-76
6MP7-MPBXPK-KZ-SSP-LD	6MP7-MAB3XPK-KZ-SSP-LD	Pages 60-76
6MP7-MPBXPK-V-SSP	6MP7-MAB3XPK-V-SSP	Pages 60-76
6MP7-MPCBL-5-SS	See 6MP7-MACBL-20-SS	Page 83
6MP7-MPCL-5-BN-SS	See 6MP7-MACL-20-BN-SS	Page 83
6MP7-MPCL-5-V-SS	See 6MP7-MACL-20-V-SS	Page 83
6MP7-MPFL-100-SS	6MP7-MAFCL-100-SS	Pages 81-82
6MP7-MPFL-35-SS	6MP7-MAFCL-35-SS	Pages 81-82
6MP7-MPFL-40-SS	See 6MP7-MAFCL-35-SS	Pages 81-82
6MP7-MPFL-5-SS	6MP7-MAFCL-5-SS	Pages 81-82
6MP7-MPFL-65-SS	6MP7-MAFCL-65-SS	Pages 81-82
6MP7-MPGV-V-SS	6MP7-MAGV-T-SS	Page 59
6MP7-MPNAB-G-SS-HT	6MP7-MANAB-GY-SS-HT	Pages 44-56
6MP7-MPNABR-G-SS-HT	6MP7-MANABR-GY-SS-HT	Pages 44-56
6MP7-MPNABR-T-SS	6MP7-MANABR-T-SS	Pages 44-56
6MP7-MPNAB-T-SS	6MP7-MANAB-T-SS	Pages 44-56
6MP7-MPNAR-G-SS-HT	6MP7-MANAR-GY-SS-HT	Pages 44-56
6MP7-MPNARR-G-SS-HT	6MP7-MANARR-GY-SS-HT	Pages 44-56
6MP7-MPNARR-T-SS	6MP7-MANARR-T-SS	Pages 44-56
6MP7-MPNAR-T-SS	6MP7-MANAR-T-SS	Pages 44-56
6MP7-MPNLB-G-SS-HT	6MP7-MANLB-GY-SS-HT	Pages 44-56
6MP7-MPNLB-T-SS	6MP7-MANLB-T-SS	Pages 44-56
6MP7-MPNLR-G-SS-HT	6MP7-MANLR-GY-SS-HT	Pages 44-56
6MP7-MPNLR-T-SS	6MP7-MANLR-T-SS	Pages 44-56
6MP7-MPNXBD-G-SS-HT	6MP7-MANXBD-GY-SS-HT	Pages 44-56
6MP7-MPNXBD-T-SS	6MP7-MANXBD-T-SS	Pages 44-56
6MP7-MPNXBI-G-SS-HT	6MP7-MANXBI-GY-SS-HT	Pages 44-56
6MP7-MPNXBI-T-SS	6MP7-MANXBI-T-SS	Pages 44-56
6MP7-MPNXBO-G-SS-HT	6MP7-MANXBO-GY-SS-HT	Pages 44-56
6MP7-MPNXBO-T-SS	6MP7-MANXBO-T-SS	Pages 44-56
6MP7-MPNXRD-G-SS-HT	6MP7-MANXRD-GY-SS-HT	Pages 44-56
6MP7-MPNXRD-T-SS	6MP7-MANXRD-T-SS	Pages 44-56
6MP7-MPNXRI-G-SS-HT	6MP7-MANXRI-GY-SS-HT	Pages 44-56
6MP7-MPNXRI-T-SS	6MP7-MANXRI-T-SS	Pages 44-56
6MP7-MPNXRO-G-SS-HT	6MP7-MANXRO-GY-SS-HT	Pages 44-56
6MP7-MPNXRO-T-SS	6MP7-MANXRO-T-SS	Pages 44-56
6T7-MPBV-V-SS	6T7-MABV-V-SS	Page 60
8F-MAB12LPK-BN-SSP	2B12S15P8-BO	PAE Ball Valve NPT Conn.
8F-MAB12LPK-EPR-SSP	2B12S15P8-EPR	PAE Ball Valve NPT Conn.
8F-MAB12LPK-KZ-SSP	2B12S15P8-C	PAE Ball Valve NPT Conn.
8F-MAB12LPK-V-SSP	2B12S15P8	PAE Ball Valve NPT Conn.
8F-MAB3XPK-BN-SSP	3B3S15P8-BO	PAE Ball Valve NPT Conn.
8F-MAB3XPKD-BN-SSP	3BD3S15P8-BO	PAE Ball Valve NPT Conn.
8F-MAB3XPKD-EPR-SSP	3BD3S15P8-EPR	PAE Ball Valve NPT Conn.
8F-MAB3XPKD-KZ-SSP	3BD3S15P8-HT	PAE Ball Valve NPT Conn.
8F-MAB3XPKD-V-SSP	3BD3S15P8	PAE Ball Valve NPT Conn.
8F-MAB3XPK-EPR-SSP	3B3S15P8-EPR	PAE Ball Valve NPT Conn.
8F-MAB3XPK-KZ-SSP	3B3S15P8-HT	PAE Ball Valve NPT Conn.
8F-MAB3XPK-V-SSP	3B3S15P8	PAE Ball Valve NPT Conn.
8F-MAB4LPK-BN-SSP	2B4S15P8-BO	PAE Ball Valve NPT Conn.
8F-MAB4LPK-EPR-SSP	2B4S15P8-EPR	PAE Ball Valve NPT Conn.
8F-MAB4LPK-KZ-SSP	2B4S15P8-HT	PAE Ball Valve NPT Conn.
8F-MAB4LPK-V-SSP	2B4S15P8	PAE Ball Valve NPT Conn.
8F-MAB6LPK-BN-SSP	2B6S15P8-BO	PAE Ball Valve NPT Conn.
8F-MAB6LPK-EPR-SSP	2B6S15P8-EPR	PAE Ball Valve NPT Conn.
8F-MAB6LPK-KZ-SSP	2B6S15P8-HT	PAE Ball Valve NPT Conn.
8F-MAB6LPK-V-SSP	2B6S15P8	PAE Ball Valve NPT Conn.
8F-MAB6XPK-BN-SSP	3B6S15P8-BO	PAE Ball Valve NPT Conn.
8F-MAB6XPKD-BN-SSP	3BD6S15P8-BO	PAE Ball Valve NPT Conn.
8F-MAB6XPKD-EPR-SSP	3BD6S15P8-EPR	PAE Ball Valve NPT Conn.
8F-MAB6XPKD-KZ-SSP	3BD6S15P8-HT	PAE Ball Valve NPT Conn.
8F-MAB6XPKD-V-SSP	3BD6S15P8	PAE Ball Valve NPT Conn.
8F-MAB6XPK-EPR-SSP	3B6S15P8-EPR	PAE Ball Valve NPT Conn.
8F-MAB6XPK-KZ-SSP	3B6S15P8-HT	PAE Ball Valve NPT Conn.

MPI™ Part Numbers Sold Prior to July 2015 (includes Catalog 4234)	New Part Number	Additional Catalog Needed
8F-MAB6XPK-V-SSP	3B6S15P8	PAE Ball Valve NPT Conn.
8F-MAB8LPK-BN-SSP	2B8S15P8-BO	PAE Ball Valve NPT Conn.
8F-MAB8LPK-EPR-SSP	2B8S15P8-EPR	PAE Ball Valve NPT Conn.
8F-MAB8LPK-KZ-SSP	2B8S15P8-HT	PAE Ball Valve NPT Conn.
8F-MAB8LPK-V-SSP	2B8S15P8	PAE Ball Valve NPT Conn.
8F-MACBL-20-SS	CPB8800	PAE P Series Fitting/Tubing
8F-MACL-20-V-SS	CPO8800	PAE P Series Fitting/ Tubing
8F-MADBB6LPK-BN-SS	6DB15P8P4-BO	PAE Ball Valve NPT Conn.
8F-MADBB6LPK-EPR-SS	6DB15P8P4-EPR	PAE Ball Valve NPT Conn.
8F-MADBB6LPK-KZ-SS	6DB15P8P4-HT	PAE Ball Valve NPT Conn.
8F-MADBB6LPK-V-SS	6DB15P8P4	PAE Ball Valve NPT Conn.
8F-MANAB-T-SS	15P8083	PAE P Series Needle Valve
8F-MANAR-T-SS	15P8082	PAE P Series Needle Valve
8F-MANLB-T-SS	15P8071	PAE P Series Needle Valve
8F-MANLR-T-SS	15P8081	PAE P Series Needle Valve
8F-MANXBD-T-SS	15P8075	PAE P Series Needle Valve
8F-MANXBI-T-SS	15P8073	PAE P Series Needle Valve
8F-MANXBO-T-SS	15P8074	PAE P Series Needle Valve
8F-MANXRD-T-SS	15P8085	PAE P Series Needle Valve
8F-MANXRI-T-SS	15P8083	PAE P Series Needle Valve
8F-MANXRO-T-SS	15P8084	PAE P Series Needle Valve
8F-MPBLPK-BN-SSP	2B4S15P8-BO	PAE Ball Valve NPT Conn.
8F-MPBLPK-EPR-SSP	2B4S15P8-EPR	PAE Ball Valve NPT Conn.
8F-MPBLPKH-BN-SSP	2B6S15P8-BO	PAE Ball Valve NPT Conn.
8F-MPBLPKH-EPR-SSP	2B6S15P8-EPR	PAE Ball Valve NPT Conn.
8F-MPBLPKH-KZ-SSP	2B6S15P8-HT	PAE Ball Valve NPT Conn.
8F-MPBLPKH-V-SSP	2B6S15P8	PAE Ball Valve NPT Conn.
8F-MPBLPK-KZ-SSP	2B4S15P8-HT	PAE Ball Valve NPT Conn.
8F-MPBLPKUH-BN-SSP	2B8S15P8-BO	PAE Ball Valve NPT Conn.
8F-MPBLPKUH-EPR-SSP	2B8S15P8-EPR	PAE Ball Valve NPT Conn.
8F-MPBLPKUH-KZ-SSP	2B8S15P8-HT	PAE Ball Valve NPT Conn.
8F-MPBLPKUH-V-SSP	2B8S15P8	PAE Ball Valve NPT Conn.
8F-MPBLPK-V-SSP	2B4S15P8	PAE Ball Valve NPT Conn.
8F-MPBXPK-BN-SSP	3B3S15P8-BO	PAE Ball Valve NPT Conn.
8F-MPBXPKD-BN-SSP	3BD3S15P8-BO	PAE Ball Valve NPT Conn.
8F-MPBXPKD-EPR-SSP	3BD3S15P8-EPR	PAE Ball Valve NPT Conn.
8F-MPBXPKDH-BN-SSP	3BD6S15P8-BO	PAE Ball Valve NPT Conn.
8F-MPBXPKDH-EPR-SSP	3BD6S15P8-EPR	PAE Ball Valve NPT Conn.
8F-MPBXPKDH-KZ-SSP	3BD6S15P8-HT	PAE Ball Valve NPT Conn.
8F-MPBXPKDH-V-SSP	3BD6S15P8	PAE Ball Valve NPT Conn.
8F-MPBXPKD-KZ-SSP	3BD3S15P8-HT	PAE Ball Valve NPT Conn.
8F-MPBXPKD-V-SSP	3BD3S15P8	PAE Ball Valve NPT Conn.
8F-MPBXPK-EPR-SSP	3B3S15P8-EPR	PAE Ball Valve NPT Conn.
8F-MPBXPKH-BN-SSP	3B6S15P8-BO	PAE Ball Valve NPT Conn.
8F-MPBXPKH-EPR-SSP	3B6S15P8-EPR	PAE Ball Valve NPT Conn.
8F-MPBXPKH-KZ-SSP	3B6S15P8-HT	PAE Ball Valve NPT Conn.
8F-MPBXPKH-V-SSP	3B6S15P8	PAE Ball Valve NPT Conn.
8F-MPBXPK-KZ-SSP	3B3S15P8-HT	PAE Ball Valve NPT Conn.
8F-MPBXPK-V-SSP	3B3S15P8	PAE Ball Valve NPT Conn.
8F-MPCBL-5-SS	CPB8800	PAE P Series Fitting/Tubing
8F-MPCL-5-V-SS	CPO8800	PAE P Series Fitting/Tubing
8F-MPNAB-T-SS	15P8083	PAE P Series Needle Valve
8F-MPNAR-T-SS	15P8082	PAE P Series Needle Valve
8F-MPNLB-T-SS	15P8071	PAE P Series Needle Valve
8F-MPNLR-T-SS	15P8081	PAE P Series Needle Valve
8F-MPNXBD-T-SS	15P8075	PAE P Series Needle Valve
8F-MPNXBI-T-SS	15P8073	PAE P Series Needle Valve
8F-MPNXBO-T-SS	15P8074	PAE P Series Needle Valve
8F-MPNXRD-T-SS	15P8085	PAE P Series Needle Valve
8F-MPNXRI-T-SS	15P8083	PAE P Series Needle Valve
8F-MPNXRO-T-SS	15P8084	PAE P Series Needle Valve
8M8F-MARA-****-SS	5PRVP8083 W/ ADAPTER	PAE P Series Relief Valve
8M8F-MARA-****-SS	10PRVP8083 W/ ADAPTER	PAE P Series Relief Valve
8M8F-MARA-****-SS	15PRVP8083 W/ ADAPTER	PAE P Series Relief Valve
8M8F-MARSA-****-SS	5PRVS8083 W/ ADAPTER	PAE P Series Relief Valve
8M8F-MARSA-****-SS	10PRVS8083 W/ ADAPTER	PAE P Series Relief Valve
8M8F-MARSA-****-SS	15PRVS8083 W/ ADAPTER	PAE P Series Relief Valve
8M8F-MPRA-****-SS	5PRVP8083 W/ ADAPTER	PAE P Series Relief Valve
8M8F-MPRA-****-SS	10PRVP8083 W/ ADAPTER	PAE P Series Relief Valve
8M8F-MPRA-****-SS	15PRVP8083 W/ ADAPTER	PAE P Series Relief Valve
8MP78F-MARA-****-SS	8MP712F-MARA-****-SS	Pages 84-85
8MP78F-MARSA-****-SS	8MP712F-MARSA-****-SS	Pages 86-87

Note: Catalogs with a "**PAE**" (Parker Autoclave Engineers) reference can be viewed at **autoclave.com** or by downloading our PAE Catalog Hub…**Click here**!

MPI™ Part Numbers Sold Prior to July 2015 (includes Catalog 4234)	New Part Number	Additional Catalog Needed
8MP78F-MPRA-****-SS	8MP712F-MARA-****-SS	Pages 84-85
8MP7-MPBLPK-BN-SSP	8MP7-MAB4LPK-BN-SSP	Pages 60-76
8MP7-MPBLPK-BN-SSP-LD	8MP7-MAB4LPK-BN-SSP-LD	Pages 60-76
8MP7-MPBLPK-EPR-SSP	8MP7-MAB4LPK-EPR-SSP	Pages 60-76
8MP7-MPBLPK-EPR-SSP-LD	8MP7-MAB4LPK-EPR-SSP-LD	Pages 60-76
8MP7-MPBLPKH-BN-SSP	8MP7-MAB6LPK-BN-SSP	Pages 60-76
8MP7-MPBLPKH-BN-SSP-LD	8MP7-MAB6LPK-BN-SSP-LD	Pages 60-76
8MP7-MPBLPKH-EPR-SSP	8MP7-MAB6LPK-EPR-SSP	Pages 60-76
8MP7-MPBLPKH-EPR-SSP-LD	8MP7-MAB6LPK-EPR-SSP-LD	Pages 60-76
8MP7-MPBLPKH-KZ-SSP	8MP7-MAB6LPK-KZ-SSP	Pages 60-76
8MP7-MPBLPKH-KZ-SSP-LD	8MP7-MAB6LPK-KZ-SSP-LD	Pages 60-76
8MP7-MPBLPKH-V-SSP	8MP7-MAB6LPK-V-SSP	Pages 60-76
8MP7-MPBLPKH-V-SSP-HYD	8MP7-MAB6LPK-V-SSP	Pages 60-76
8MP7-MPBLPKH-V-SSP-LD	8MP7-MAB6LPK-V-SSP-LD	Pages 60-76
8MP7-MPBLPK-KZ-SSP	8MP7-MAB4LPK-KZ-SSP	Pages 60-76
8MP7-MPBLPK-KZ-SSP-LD	8MP7-MAB4LPK-KZ-SSP-LD	Pages 60-76
8MP7-MPBLPK-V-SSP	8MP7-MAB4LPK-V-SSP	Pages 60-76
8MP7-MPBLPK-V-SSP-LD	8MP7-MAB4LPK-V-SSP-LD	Pages 60-76
8MP7-MPBXPK-BN-SSP	8MP7-MAB3XPK-BN-SSP	Pages 60-76
8MP7-MPBXPKD-BN-SSP	8MP7-MAB3XPKD-BN-SSP	Pages 60-76
8MP7-MPBXPKD-EPR-SSP	8MP7-MAB3XPKD-EPR-SSP	Pages 60-76
8MP7-MPBXPKDH-BN-SSP	8MP7-MAB6XPKD-BN-SSP	Pages 60-76
8MP7-MPBXPKDH-EPR-SSP	8MP7-MAB6XPKD-EPR-SSP	Pages 60-76
8MP7-MPBXPKDH-KZ-SSP	8MP7-MAB6XPKD-KZ-SSP	Pages 60-76
8MP7-MPBXPKDH-V-SSP	8MP7-MAB6XPKD-V-SSP	Pages 60-76
8MP7-MPBXPKD-KZ-SSP	8MP7-MAB3XPKD-KZ-SSP	Pages 60-76
8MP7-MPBXPKD-V-SSP	8MP7-MAB3XPKD-V-SSP	Pages 60-76
8MP7-MPBXPK-EPR-SSP	8MP7-MAB3XPK-EPR-SSP	Pages 60-76
8MP7-MPBXPKH-BN-SSP	8MP7-MAB6XPK-BN-SSP	Pages 60-76
8MP7-MPBXPKH-BN-SSP-LD	8MP7-MAB6XPK-BN-SSP-LD	Pages 60-76
8MP7-MPBXPKH-EPR-SSP	8MP7-MAB6XPK-EPR-SSP	Pages 60-76
8MP7-MPBXPKH-EPR-SSP-LD	8MP7-MAB6XPK-EPR-SSP-LD	Pages 60-76
8MP7-MPBXPKH-KZ-SSP	8MP7-MAB6XPK-KZ-SSP	Pages 60-76
8MP7-MPBXPKH-KZ-SSP-LD	8MP7-MAB6XPK-KZ-SSP-LD	Pages 60-76
8MP7-MPBXPKH-V-SSP	8MP7-MAB6XPK-V-SSP	Pages 60-76
8MP7-MPBXPKH-V-SSP-LD	8MP7-MAB6XPK-V-SSP-LD	Pages 60-76
8MP7-MPBXPK-KZ-SSP	8MP7-MAB3XPK-KZ-SSP	Pages 60-76
8MP7-MPBXPK-V-SSP	8MP7-MAB3XPK-V-SSP	Pages 60-76
8MP7-MPCBL-25-SS	See 8MP7-MACBL-20-SS	Page 83
8MP7-MPCBL-5-SS	See 8MP7-MACBL-20-SS	Page 83
8MP7-MPCBL-80-SS	8MP7-MACBL-80-SS	Page 83
8MP7-MPCL-5-BN-SS	See 8MP7-MACL-20-BN-SS	Page 83
8MP7-MPCL-5-T-SS	See 8MP7-MACL-20-TO-SS	Page 83
8MP7-MPCL-5-V-SS	See 8MP7-MACL-20-V-SS	Page 83
8MP7-MPFL-100-SS	8MP7-MAFCL-100-SS	Page 81-82
8MP7-MPFL-10-SS	8MP7-MAFCL-10-SS	Pages 81-82
8MP7-MPFL-35-SS	8MP7-MAFCL-35-SS	Pages 81-82
8MP7-MPFL-40-SS	See 8MP7-MAFCL-35-SS	Pages 81-82
8MP7-MPFL-5-SS	8MP7-MAFCL-5-SS	Pages 81-82
8MP7-MPFL-65-SS	8MP7-MAFCL-65-SS	Pages 81-82
8MP7-MPGV-V-SS	8MP7-MAGV-T-SS	Pages 59
8MP7-MPNAB-G-SS-HT	8MP7-MANAB-GY-SS-HT	Pages 44-56
8MP7-MPNABR-G-SS-HT	8MP7-MANABR-GY-SS-HT	Pages 44-56
8MP7-MPNABR-T-SS	8MP7-MANABR-T-SS	Pages 44-56
8MP7-MPNAB-T-SS	8MP7-MANAB-T-SS	Pages 44-56
8MP7-MPNAR-G-SS-HT	8MP7-MANAR-GY-SS-HT	Pages 44-56
8MP7-MPNARR-G-SS-HT	8MP7-MANARR-GY-SS-HT	Pages 44-56
8MP7-MPNARR-T-SS	8MP7-MANARR-T-SS	Pages 44-56
8MP7-MPNAR-T-SS	8MP7-MANAR-T-SS	Pages 44-56
8MP7-MPNLB-G-SS-HT	8MP7-MANLB-GY-SS-HT	Pages 44-56
8MP7-MPNLB-T-SS	8MP7-MANLB-T-SS	Pages 44-56
8MP7-MPNLR-G-SS-HT	8MP7-MANLR-GY-SS-HT	Pages 44-56
8MP7-MPNLR-T-SS	8MP7-MANLR-T-SS	Pages 44-56
8MP7-MPNLR-T-SS-HYD	8MP7-MANLR-T-SS	Pages 44-56
8MP7-MPNXBD-G-SS-HT	8MP7-MANXBD-GY-SS-HT	Pages 44-56
8MP7-MPNXBD-T-SS	8MP7-MANXBD-T-SS	Pages 44-56
8MP7-MPNXBI-G-SS-HT	8MP7-MANXBI-GY-SS-HT	Pages 44-56
8MP7-MPNXBI-T-SS	8MP7-MANXBI-T-SS	Pages 44-56
8MP7-MPNXBO-EPR-SS	Not Available	Pages 44-56
8MP7-MPNXBO-G-SS-HT	8MP7-MANXBO-GY-SS-HT	Pages 44-56
8MP7-MPNXBO-T-SS	8MP7-MANXBO-T-SS	Pages 44-56
8MP7-MPNXRD-G-SS-HT	8MP7-MANXRD-GY-SS-HT	Pages 44-56

MPI™ Part Numbers Sold Prior to July 2015 (includes Catalog 4234)	New Part Number	Additional Catalog Needed
8MP7-MPNXRD-T-SS	8MP7-MANXRD-T-SS	Pages 44-56
8MP7-MPNXRI-G-SS-HT	8MP7-MANXRI-GY-SS-HT	Pages 44-56
8MP7-MPNXRI-T-SS	8MP7-MANXRI-T-SS	Pages 44-56
8MP7-MPNXRO-G-SS-HT	8MP7-MANXRO-GY-SS-HT	Pages 44-56
8MP7-MPNXRO-T-SS	8MP7-MANXRO-T-SS	Pages 44-56
8T7-MPBV-V-SS	8T7-MABV-V-SS	Page 51
9HF8F-MARA-****-SS	15RVP9083 W/ ADAPTER	PAE Relief Valve
9HF8F-MARA-****-SS	20RVP9083 W/ ADAPTER	PAE Relief Valve
9HF8F-MARSA-****-SS	20RVS9083 W/ ADAPTER	PAE Relief Valve
9HF8F-MPRA-****-SS	15RVP9083 W/ ADAPTER	PAE Relief Valve
9HF8F-MPRA-****-SS	20RVP9083 W/ ADAPTER	PAE Relief Valve
9HF-MPGV-V-SS	30GV9078	PAE Block and Bleed Valve
9HM-MPBV-V-SS	30BV9002	PAE Block and Bleed Valve
9MP78F-MARA-****-SS	9MP712F-MARA-****-SS	Pages 73-76
9MP78F-MARSA-****-SS	9MP712F-MARSA-****-SS	Pages 73-76
9MP78F-MPRA-****-SS	9MP712F-MARA-****-SS	Pages 73-76
9MP7-MANABH-T-SS	9MP7-MANAB-T-SS	Pages 44-56
9MP7-MANABH-T-SS-LTB	9MP7-MANAB-T-SS-LTB	Pages 44-56
9MP7-MANABRH-T-SS	9MP7-MANABR-T-SS	Pages 44-56
9MP7-MANABRH-T-SS-LTB	9MP7-MANABR-T-SS-LTB	Pages 44-56
9MP7-MANARH-T-SS	9MP7-MANAR-T-SS	Pages 44-56
9MP7-MANARH-T-SS-LTB	9MP7-MANAR-T-SS-LTB	Pages 44-56
9MP7-MANARRH-T-SS	9MP7-MANARR-T-SS	Pages 44-56
9MP7-MANARRH-T-SS-LTB	9MP7-MANARR-T-SS-LTB	Pages 44-56
9MP7-MANLBH-T-SS	9MP7-MANLB-T-SS	Pages 44-56
9MP7-MANLBH-T-SS-LTB	9MP7-MANLB-T-SS-LTB	Pages 44-56
9MP7-MANLRH-T-SS	9MP7-MANLR-T-SS	Pages 44-56
9MP7-MANLRH-T-SS-LTB	9MP7-MANLR-T-SS-LTB	Pages 44-56
9MP7-MANXBDH-T-SS	9MP7-MANXBD-T-SS	Pages 44-56
9MP7-MANXBDH-T-SS-LTB	9MP7-MANXBD-T-SS-LTB	Pages 44-56
9MP7-MANXBIH-T-SS	9MP7-MANXBI-T-SS	Pages 44-56
9MP7-MANXBIH-T-SS-LTB	9MP7-MANXBI-T-SS-LTB	Pages 44-56
9MP7-MANXBOH-T-SS	9MP7-MANXBO-T-SS	Pages 44-56
9MP7-MANXBOH-T-SS-LTB	9MP7-MANXBO-T-SS-LTB	Pages 44-56
9MP7-MANXRDH-T-SS	9MP7-MANXRD-T-SS	Pages 44-56
9MP7-MANXRDH-T-SS-LTB	9MP7-MANXRD-T-SS-LTB	Pages 44-56
9MP7-MANXRIH-T-SS	9MP7-MANXRI-T-SS	Pages 44-56
9MP7-MANXRIH-T-SS-LTB	9MP7-MANXRI-T-SS-LTB	Pages 44-56
9MP7-MANXROH-T-SS	9MP7-MANXRO-T-SS	Pages 44-56
9MP7-MANXROH-T-SS-LTB	9MP7-MANXRO-T-SS-LTB	Pages 44-56
9MP7-MPBLPK-BN-SSP	9MP7-MAB4LPK-BN-SSP	Pages 60-76
9MP7-MPBLPK-BN-SSP-LD	9MP7-MAB4LPK-BN-SSP-LD	Pages 60-76
9MP7-MPBLPK-EPR-SSP	9MP7-MAB4LPK-EPR-SSP	Pages 60-76
9MP7-MPBLPK-EPR-SSP-LD	9MP7-MAB4LPK-EPR-SSP-LD	Pages 60-76
9MP7-MPBLPKH-BN-SSP	9MP7-MAB6LPK-BN-SSP	Pages 60-76
9MP7-MPBLPKH-BN-SSP-LD	9MP7-MAB6LPK-BN-SSP-LD	Pages 60-76
9MP7-MPBLPKH-EPR-SSP	9MP7-MAB6LPK-EPR-SSP	Pages 60-76
9MP7-MPBLPKH-EPR-SSP-LD	9MP7-MAB6LPK-EPR-SSP-LD	Pages 60-76
9MP7-MPBLPKH-KZ-SSP	9MP7-MAB6LPK-KZ-SSP	Pages 60-76
9MP7-MPBLPKH-KZ-SSP-LD	9MP7-MAB6LPK-KZ-SSP-LD	Pages 60-76
9MP7-MPBLPKH-V-SSP	9MP7-MAB6LPK-V-SSP	Pages 60-76
9MP7-MPBLPKH-V-SSP-LD	9MP7-MAB6LPK-V-SSP-LD	Pages 60-76
9MP7-MPBLPK-KZ-SSP	9MP7-MAB4LPK-KZ-SSP	Pages 60-76
9MP7-MPBLPK-KZ-SSP-LD	9MP7-MAB4LPK-KZ-SSP-LD	Pages 60-76
9MP7-MPBLPK-V-SSP	9MP7-MAB4LPK-V-SSP	Pages 60-76
9MP7-MPBLPK-V-SSP-LD	9MP7-MAB4LPK-V-SSP-LD	Pages 60-76
9MP7-MPBXPK-BN-SSP	9MP7-MAB3XPK-BN-SSP	Pages 60-76
9MP7-MPBXPKD-BN-SSP	9MP7-MAB3XPKD-BN-SSP	Pages 60-76
9MP7-MPBXPKD-EPR-SSP	9MP7-MAB3XPKD-EPR-SSP	Pages 60-76
9MP7-MPBXPKDH-BN-SSP	9MP7-MAB6XPKD-BN-SSP	Pages 60-76
9MP7-MPBXPKDH-EPR-SSP	9MP7-MAB6XPKD-EPR-SSP	Pages 60-76
9MP7-MPBXPKDH-KZ-SSP	9MP7-MAB6XPKD-KZ-SSP	Pages 60-76
9MP7-MPBXPKDH-V-SSP	9MP7-MAB6XPKD-V-SSP	Pages 60-76
9MP7-MPBXPKDH-V-SSP-LD	9MP7-MAB6XPKD-V-SSP-LD	Pages 60-76
9MP7-MPBXPKD-KZ-SSP	9MP7-MAB3XPKD-KZ-SSP	Pages 60-76
9MP7-MPBXPKD-V-SSP	9MP7-MAB3XPKD-V-SSP	Pages 60-76
9MP7-MPBXPK-EPR-SSP	9MP7-MAB3XPK-EPR-SSP	Pages 60-76
9MP7-MPBXPKH-BN-SSP	9MP7-MAB6XPK-BN-SSP	Pages 60-76
9MP7-MPBXPKH-BN-SSP-LD	9MP7-MAB6XPK-BN-SSP-LD	Pages 60-76
9MP7-MPBXPKH-EPR-SSP	9MP7-MAB6XPK-EPR-SSP	Pages 60-76
9MP7-MPBXPKH-EPR-SSP-LD	9MP7-MAB6XPK-EPR-SSP-LD	Pages 60-76
9MP7-MPBXPKH-KZ-SSP	9MP7-MAB6XPK-KZ-SSP	Pages 60-76

Note: Catalogs with a "**PAE**" (Parker Autoclave Engineers) reference can be viewed at **autoclave.com** or by downloading our PAE Catalog Hub…**Click here**!

MPI™ Part Numbers Sold Prior to July 2015 (includes Catalog 4234)	New Part Number	Additional Catalog Needed
8MP78F-MPRA-****-SS	8MP712F-MARA-****-SS	Pages 84-85
8MP7-MPBLPK-BN-SSP	8MP7-MAB4LPK-BN-SSP	Pages 60-76
8MP7-MPBLPK-BN-SSP-LD	8MP7-MAB4LPK-BN-SSP-LD	Pages 60-76
8MP7-MPBLPK-EPR-SSP	8MP7-MAB4LPK-EPR-SSP	Pages 60-76
8MP7-MPBLPK-EPR-SSP-LD	8MP7-MAB4LPK-EPR-SSP-LD	Pages 60-76
8MP7-MPBLPKH-BN-SSP	8MP7-MAB6LPK-BN-SSP	Pages 60-76
8MP7-MPBLPKH-BN-SSP-LD	8MP7-MAB6LPK-BN-SSP-LD	Pages 60-76
8MP7-MPBLPKH-EPR-SSP	8MP7-MAB6LPK-EPR-SSP	Pages 60-76
8MP7-MPBLPKH-EPR-SSP-LD	8MP7-MAB6LPK-EPR-SSP-LD	Pages 60-76
8MP7-MPBLPKH-KZ-SSP	8MP7-MAB6LPK-KZ-SSP	Pages 60-76
8MP7-MPBLPKH-KZ-SSP-LD	8MP7-MAB6LPK-KZ-SSP-LD	Pages 60-76
8MP7-MPBLPKH-V-SSP	8MP7-MAB6LPK-V-SSP	Pages 60-76
8MP7-MPBLPKH-V-SSP-HYD	8MP7-MAB6LPK-V-SSP	Pages 60-76
8MP7-MPBLPKH-V-SSP-LD	8MP7-MAB6LPK-V-SSP-LD	Pages 60-76
8MP7-MPBLPK-KZ-SSP	8MP7-MAB4LPK-KZ-SSP	Pages 60-76
8MP7-MPBLPK-KZ-SSP-LD	8MP7-MAB4LPK-KZ-SSP-LD	Pages 60-76
8MP7-MPBLPK-V-SSP	8MP7-MAB4LPK-V-SSP	Pages 60-76
8MP7-MPBLPK-V-SSP-LD	8MP7-MAB4LPK-V-SSP-LD	Pages 60-76
8MP7-MPBXPK-BN-SSP	8MP7-MAB3XPK-BN-SSP	Pages 60-76
8MP7-MPBXPKD-BN-SSP	8MP7-MAB3XPKD-BN-SSP	Pages 60-76
8MP7-MPBXPKD-EPR-SSP	8MP7-MAB3XPKD-EPR-SSP	Pages 60-76
8MP7-MPBXPKDH-BN-SSP	8MP7-MAB6XPKD-BN-SSP	Pages 60-76
8MP7-MPBXPKDH-EPR-SSP	8MP7-MAB6XPKD-EPR-SSP	Pages 60-76
8MP7-MPBXPKDH-KZ-SSP	8MP7-MAB6XPKD-KZ-SSP	Pages 60-76
8MP7-MPBXPKDH-V-SSP	8MP7-MAB6XPKD-V-SSP	Pages 60-76
8MP7-MPBXPKD-KZ-SSP	8MP7-MAB3XPKD-KZ-SSP	Pages 60-76
8MP7-MPBXPKD-V-SSP	8MP7-MAB3XPKD-V-SSP	Pages 60-76
8MP7-MPBXPK-EPR-SSP	8MP7-MAB3XPK-EPR-SSP	Pages 60-76
8MP7-MPBXPKH-BN-SSP	8MP7-MAB6XPK-BN-SSP	Pages 60-76
8MP7-MPBXPKH-BN-SSP-LD	8MP7-MAB6XPK-BN-SSP-LD	Pages 60-76
8MP7-MPBXPKH-EPR-SSP	8MP7-MAB6XPK-EPR-SSP	Pages 60-76
8MP7-MPBXPKH-EPR-SSP-LD	8MP7-MAB6XPK-EPR-SSP-LD	Pages 60-76
8MP7-MPBXPKH-KZ-SSP	8MP7-MAB6XPK-KZ-SSP	Pages 60-76
8MP7-MPBXPKH-KZ-SSP-LD	8MP7-MAB6XPK-KZ-SSP-LD	Pages 60-76
8MP7-MPBXPKH-V-SSP	8MP7-MAB6XPK-V-SSP	Pages 60-76
8MP7-MPBXPKH-V-SSP-LD	8MP7-MAB6XPK-V-SSP-LD	Pages 60-76
8MP7-MPBXPK-KZ-SSP	8MP7-MAB3XPK-KZ-SSP	Pages 60-76
8MP7-MPBXPK-V-SSP	8MP7-MAB3XPK-V-SSP	Pages 60-76
8MP7-MPCBL-25-SS	See 8MP7-MACBL-20-SS	Page 83
8MP7-MPCBL-5-SS	See 8MP7-MACBL-20-SS	Page 83
8MP7-MPCBL-80-SS	8MP7-MACBL-80-SS	Page 83
8MP7-MPCL-5-BN-SS	See 8MP7-MACL-20-BN-SS	Page 83
8MP7-MPCL-5-T-SS	See 8MP7-MACL-20-TO-SS	Page 83
8MP7-MPCL-5-V-SS	See 8MP7-MACL-20-V-SS	Page 83
8MP7-MPFL-100-SS	8MP7-MAFCL-100-SS	Page 81-82
8MP7-MPFL-10-SS	8MP7-MAFCL-10-SS	Pages 81-82
8MP7-MPFL-35-SS	8MP7-MAFCL-35-SS	Pages 81-82
8MP7-MPFL-40-SS	See 8MP7-MAFCL-35-SS	Pages 81-82
8MP7-MPFL-5-SS	8MP7-MAFCL-5-SS	Pages 81-82
8MP7-MPFL-65-SS	8MP7-MAFCL-65-SS	Pages 81-82
8MP7-MPGV-V-SS	8MP7-MAGV-T-SS	Pages 59
8MP7-MPNAB-G-SS-HT	8MP7-MANAB-GY-SS-HT	Pages 44-56
8MP7-MPNABR-G-SS-HT	8MP7-MANABR-GY-SS-HT	Pages 44-56
8MP7-MPNABR-T-SS	8MP7-MANABR-T-SS	Pages 44-56
8MP7-MPNAB-T-SS	8MP7-MANAB-T-SS	Pages 44-56
8MP7-MPNAR-G-SS-HT	8MP7-MANAR-GY-SS-HT	Pages 44-56
8MP7-MPNARR-G-SS-HT	8MP7-MANARR-GY-SS-HT	Pages 44-56
8MP7-MPNARR-T-SS	8MP7-MANARR-T-SS	Pages 44-56
8MP7-MPNAR-T-SS	8MP7-MANAR-T-SS	Pages 44-56
8MP7-MPNLB-G-SS-HT	8MP7-MANLB-GY-SS-HT	Pages 44-56
8MP7-MPNLB-T-SS	8MP7-MANLB-T-SS	Pages 44-56
8MP7-MPNLR-G-SS-HT	8MP7-MANLR-GY-SS-HT	Pages 44-56
8MP7-MPNLR-T-SS	8MP7-MANLR-T-SS	Pages 44-56
8MP7-MPNLR-T-SS-HYD	8MP7-MANLR-T-SS	Pages 44-56
8MP7-MPNXBD-G-SS-HT	8MP7-MANXBD-GY-SS-HT	Pages 44-56
8MP7-MPNXBD-T-SS	8MP7-MANXBD-T-SS	Pages 44-56
8MP7-MPNXBI-G-SS-HT	8MP7-MANXBI-GY-SS-HT	Pages 44-56
8MP7-MPNXBI-T-SS	8MP7-MANXBI-T-SS	Pages 44-56
8MP7-MPNXBO-EPR-SS	Not Available	Pages 44-56
8MP7-MPNXBO-G-SS-HT	8MP7-MANXBO-GY-SS-HT	Pages 44-56
8MP7-MPNXBO-T-SS	8MP7-MANXBO-T-SS	Pages 44-56
8MP7-MPNXRD-G-SS-HT	8MP7-MANXRD-GY-SS-HT	Pages 44-56

MPI™ Part Numbers Sold Prior to July 2015 (includes Catalog 4234)	New Part Number	Additional Catalog Needed
8MP7-MPNXRD-T-SS	8MP7-MANXRD-T-SS	Pages 44-56
8MP7-MPNXRI-G-SS-HT	8MP7-MANXRI-GY-SS-HT	Pages 44-56
8MP7-MPNXRI-T-SS	8MP7-MANXRI-T-SS	Pages 44-56
8MP7-MPNXRO-G-SS-HT	8MP7-MANXRO-GY-SS-HT	Pages 44-56
8MP7-MPNXRO-T-SS	8MP7-MANXRO-T-SS	Pages 44-56
8T7-MPBV-V-SS	8T7-MABV-V-SS	Page 60
9HF8F-MARA-****-SS	15RVP9083 W/ ADAPTER	PAE Relief Valve
9HF8F-MARA-****-SS	20RVP9083 W/ ADAPTER	PAE Relief Valve
9HF8F-MARSA-****-SS	20RVS9083 W/ ADAPTER	PAE Relief Valve
9HF8F-MPRA-****-SS	15RVP9083 W/ ADAPTER	PAE Relief Valve
9HF8F-MPRA-****-SS	20RVP9083 W/ ADAPTER	PAE Relief Valve
9HF-MPGV-V-SS	30GV9078	PAE Block and Bleed Valve
9HM-MPBV-V-SS	30BV9002	PAE Block and Bleed Valve
9MP78F-MARA-****-SS	9MP712F-MARA-****-SS	Pages 84-85
9MP78F-MARSA-****-SS	9MP712F-MARSA-****-SS	Pages 86-87
9MP78F-MPRA-****-SS	9MP712F-MARA-****-SS	Pages 84-85
9MP7-MANABH-T-SS	9MP7-MANAB-T-SS	Pages 44-56
9MP7-MANABH-T-SS-LTB	9MP7-MANAB-T-SS-LTB	Pages 44-56
9MP7-MANABRH-T-SS	9MP7-MANABR-T-SS	Pages 44-56
9MP7-MANABRH-T-SS-LTB	9MP7-MANABR-T-SS-LTB	Pages 44-56
9MP7-MANARH-T-SS	9MP7-MANAR-T-SS	Pages 44-56
9MP7-MANARH-T-SS-LTB	9MP7-MANAR-T-SS-LTB	Pages 44-56
9MP7-MANARRH-T-SS	9MP7-MANARR-T-SS	Pages 44-56
9MP7-MANARRH-T-SS-LTB	9MP7-MANARR-T-SS-LTB	Pages 44-56
9MP7-MANLBH-T-SS	9MP7-MANLB-T-SS	Pages 44-56
9MP7-MANLBH-T-SS-LTB	9MP7-MANLB-T-SS-LTB	Pages 44-56
9MP7-MANLRH-T-SS	9MP7-MANLR-T-SS	Pages 44-56
9MP7-MANLRH-T-SS-LTB	9MP7-MANLR-T-SS-LTB	Pages 44-56
9MP7-MANXBDH-T-SS	9MP7-MANXBD-T-SS	Pages 44-56
9MP7-MANXBDH-T-SS-LTB	9MP7-MANXBD-T-SS-LTB	Pages 44-56
9MP7-MANXBIH-T-SS	9MP7-MANXBI-T-SS	Pages 44-56
9MP7-MANXBIH-T-SS-LTB	9MP7-MANXBI-T-SS-LTB	Pages 44-56
9MP7-MANXBOH-T-SS	9MP7-MANXBO-T-SS	Pages 44-56
9MP7-MANXBOH-T-SS-LTB	9MP7-MANXBO-T-SS-LTB	Pages 44-56
9MP7-MANXRDH-T-SS	9MP7-MANXRD-T-SS	Pages 44-56
9MP7-MANXRDH-T-SS-LTB	9MP7-MANXRD-T-SS-LTB	Pages 44-56
9MP7-MANXRIH-T-SS	9MP7-MANXRI-T-SS	Pages 44-56
9MP7-MANXRIH-T-SS-LTB	9MP7-MANXRI-T-SS-LTB	Pages 44-56
9MP7-MANXROH-T-SS	9MP7-MANXRO-T-SS	Pages 44-56
9MP7-MANXROH-T-SS-LTB	9MP7-MANXRO-T-SS-LTB	Pages 44-56
9MP7-MPBLPK-BN-SSP	9MP7-MAB4LPK-BN-SSP	Pages 60-76
9MP7-MPBLPK-BN-SSP-LD	9MP7-MAB4LPK-BN-SSP-LD	Pages 60-76
9MP7-MPBLPK-EPR-SSP	9MP7-MAB4LPK-EPR-SSP	Pages 60-76
9MP7-MPBLPK-EPR-SSP-LD	9MP7-MAB4LPK-EPR-SSP-LD	Pages 60-76
9MP7-MPBLPKH-BN-SSP	9MP7-MAB6LPK-BN-SSP	Pages 60-76
9MP7-MPBLPKH-BN-SSP-LD	9MP7-MAB6LPK-BN-SSP-LD	Pages 60-76
9MP7-MPBLPKH-EPR-SSP	9MP7-MAB6LPK-EPR-SSP	Pages 60-76
9MP7-MPBLPKH-EPR-SSP-LD	9MP7-MAB6LPK-EPR-SSP-LD	Pages 60-76
9MP7-MPBLPKH-KZ-SSP	9MP7-MAB6LPK-KZ-SSP	Pages 60-76
9MP7-MPBLPKH-KZ-SSP-LD	9MP7-MAB6LPK-KZ-SSP-LD	Pages 60-76
9MP7-MPBLPKH-V-SSP	9MP7-MAB6LPK-V-SSP	Pages 60-76
9MP7-MPBLPKH-V-SSP-LD	9MP7-MAB6LPK-V-SSP-LD	Pages 60-76
9MP7-MPBLPK-KZ-SSP	9MP7-MAB4LPK-KZ-SSP	Pages 60-76
9MP7-MPBLPK-KZ-SSP-LD	9MP7-MAB4LPK-KZ-SSP-LD	Pages 60-76
9MP7-MPBLPK-V-SSP	9MP7-MAB4LPK-V-SSP	Pages 60-76
9MP7-MPBLPK-V-SSP-LD	9MP7-MAB4LPK-V-SSP-LD	Pages 60-76
9MP7-MPBXPK-BN-SSP	9MP7-MAB3XPK-BN-SSP	Pages 60-76
9MP7-MPBXPKD-BN-SSP	9MP7-MAB3XPKD-BN-SSP	Pages 60-76
9MP7-MPBXPKD-EPR-SSP	9MP7-MAB3XPKD-EPR-SSP	Pages 60-76
9MP7-MPBXPKDH-BN-SSP	9MP7-MAB6XPKD-BN-SSP	Pages 60-76
9MP7-MPBXPKDH-EPR-SSP	9MP7-MAB6XPKD-EPR-SSP	Pages 60-76
9MP7-MPBXPKDH-KZ-SSP	9MP7-MAB6XPKD-KZ-SSP	Pages 60-76
9MP7-MPBXPKDH-V-SSP	9MP7-MAB6XPKD-V-SSP	Pages 60-76
9MP7-MPBXPKDH-V-SSP-LD	9MP7-MAB6XPKD-V-SSP-LD	Pages 60-76
9MP7-MPBXPKD-KZ-SSP	9MP7-MAB3XPKD-KZ-SSP	Pages 60-76
9MP7-MPBXPKD-V-SSP	9MP7-MAB3XPKD-V-SSP	Pages 60-76
9MP7-MPBXPK-EPR-SSP	9MP7-MAB3XPK-EPR-SSP	Pages 60-76
9MP7-MPBXPKH-BN-SSP	9MP7-MAB6XPK-BN-SSP	Pages 60-76
9MP7-MPBXPKH-BN-SSP-LD	9MP7-MAB6XPK-BN-SSP-LD	Pages 60-76
9MP7-MPBXPKH-EPR-SSP	9MP7-MAB6XPK-EPR-SSP	Pages 60-76
9MP7-MPBXPKH-EPR-SSP-LD	9MP7-MAB6XPK-EPR-SSP-LD	Pages 60-76
9MP7-MPBXPKH-KZ-SSP	9MP7-MAB6XPK-KZ-SSP	Pages 60-76

Note: Catalogs with a "**PAE**" (Parker Autoclave Engineers) reference can be viewed at **autoclave.com** or by downloading our PAE Catalog Hub…**Click here**!

MPI™ Part Numbers Sold Prior to July 2015 (includes Catalog 4234)	New Part Number	Additional Catalog Needed
9MP7-MPBXPKH-KZ-SSP-LD	9MP7-MAB6XPK-KZ-SSP-LD	Pages 60-76
9MP7-MPBXPKH-V-SSP	9MP7-MAB6XPK-V-SSP	Pages 60-76
9MP7-MPBXPKH-V-SSP-LD	9MP7-MAB6XPK-V-SSP-LD	Pages 60-76
9MP7-MPBXPK-KZ-SSP	9MP7-MAB3XPK-KZ-SSP	Pages 60-76
9MP7-MPBXPK-V-SSP	9MP7-MAB3XPK-V-SSP	Pages 60-76
9MP7-MPCBL-5-SS	See 9MP7-MACBL-20-SS	Page 83
9MP7-MPCL-5-BN-SS	See 9MP7-MACBL-20-SS	Page 83
9MP7-MPCL-5-V-SS	See 9MP7-MACL-20-BN-SS	Page 83
9MP7-MPFL-0.5-SS	9MP7-MAFCL-0.5-SS	Page 81-82
9MP7-MPFL-100-SS	9MP7-MAFCL-100-SS	Page 81-82
9MP7-MPFL-10-SS	9MP7-MAFCL-10-SS	Page 81-82
9MP7-MPFL-35-SS	9MP7-MAFCL-35-SS	Page 81-82
9MP7-MPFL-40-SS	See 9MP7-MAFCL-35-SS	Page 81-82
9MP7-MPFL-5-SS	9MP7-MAFCL-5-SS	Page 81-82
9MP7-MPFL-65-SS	9MP7-MAFCL-65-SS	Page 81-82
9MP7-MPGV-V-SS	9MP7-MAGV-T-SS	Page 59
9MP7-MPNAB-G-SS-HT	9MP7-MANAB-GY-SS-HT	Pages 44-56
9MP7-MPNABH-T-SS	9MP7-MANAB-T-SS	Pages 44-56
9MP7-MPNABH-T-SS-LTB	9MP7-MANAB-T-SS-LTB	Pages 44-56
9MP7-MPNABR-G-SS-HT	9MP7-MANABR-GY-SS-HT	Pages 44-56
9MP7-MPNABRH-T-SS	9MP7-MANABR-T-SS	Pages 44-56
9MP7-MPNABRH-T-SS-LTB	9MP7-MANABR-T-SS-LTB	Pages 44-56
9MP7-MPNABR-T-SS	9MP7-MANABR-T-SS	Pages 44-56
9MP7-MPNABR-T-SS-LTB	9MP7-MANABR-T-SS-LTB	Pages 44-56
9MP7-MPNAB-T-SS	9MP7-MANAB-T-SS	Pages 44-56
9MP7-MPNAB-T-SS-LTB	9MP7-MANAB-T-SS-LTB	Pages 44-56
9MP7-MPNAR-G-SS-HT	9MP7-MANAR-GY-SS-HT	Pages 44-56
9MP7-MPNARH-T-SS	9MP7-MANAR-T-SS	Pages 44-56
9MP7-MPNARH-T-SS-LTB	9MP7-MANAR-T-SS-LTB	Pages 44-56
9MP7-MPNARR-G-SS-HT	9MP7-MANARR-GY-SS-HT	Pages 44-56
9MP7-MPNARRH-T-SS	9MP7-MANARR-T-SS	Pages 44-56
9MP7-MPNARRH-T-SS-LTB	9MP7-MANARR-T-SS-LTB	Pages 44-56
9MP7-MPNARR-T-SS	9MP7-MANARR-T-SS	Pages 44-56
9MP7-MPNARR-T-SS-LTB	9MP7-MANARR-T-SS-LTB	Pages 44-56
9MP7-MPNAR-T-SS	9MP7-MANAR-T-SS	Pages 44-56
9MP7-MPNAR-T-SS-LTB	9MP7-MANAR-T-SS-LTB	Pages 44-56
9MP7-MPNLB-G-SS-HT	9MP7-MANLB-GY-SS-HT	Pages 44-56
9MP7-MPNLBH-T-SS	9MP7-MANLB-T-SS	Pages 44-56
9MP7-MPNLBH-T-SS-LTB	9MP7-MANLB-T-SS-LTB	Pages 44-56
9MP7-MPNLB-T-SS	9MP7-MANLB-T-SS	Pages 44-56
9MP7-MPNLB-T-SS-LTB	9MP7-MANLB-T-SS-LTB	Pages 44-56
9MP7-MPNLR-G-SS-HT	9MP7-MANLR-GY-SS-HT	Pages 44-56
9MP7-MPNLRH-T-SS	9MP7-MANLR-T-SS	Pages 44-56
9MP7-MPNLRH-T-SS-LTB	9MP7-MANLR-T-SS-LTB	Pages 44-56
9MP7-MPNLR-T-SS	9MP7-MANLR-T-SS	Pages 44-56
9MP7-MPNLR-T-SS-LTB	9MP7-MANLR-T-SS-LTB	Pages 44-56
9MP7-MPNXBD-G-SS-HT	9MP7-MANXBD-GY-SS-HT	Pages 44-56
9MP7-MPNXBDH-T-SS	9MP7-MANXBD-T-SS	Pages 44-56
9MP7-MPNXBDH-T-SS-LTB	9MP7-MANXBD-T-SS-LTB	Pages 44-56
9MP7-MPNXBD-T-SS	9MP7-MANXBD-T-SS	Pages 44-56
9MP7-MPNXBD-T-SS-LTB	9MP7-MANXBD-T-SS-LTB	Pages 44-56
9MP7-MPNXBI-G-SS-HT	9MP7-MANXBI-GY-SS-HT	Pages 44-56
9MP7-MPNXBIH-T-SS	9MP7-MANXBI-T-SS	Pages 44-56
9MP7-MPNXBIH-T-SS-LTB	9MP7-MANXBI-T-SS-LTB	Pages 44-56
9MP7-MPNXBI-T-SS	9MP7-MANXBI-T-SS	Pages 44-56
9MP7-MPNXBI-T-SS-LTB	9MP7-MANXBI-T-SS-LTB	Pages 44-56
9MP7-MPNXBO-G-SS-HT	9MP7-MANXBO-GY-SS-HT	Pages 44-56
9MP7-MPNXBOH-T-SS	9MP7-MANXBO-T-SS	Pages 44-56
9MP7-MPNXBOH-T-SS-LTB	9MP7-MANXBO-T-SS-LTB	Pages 44-56
9MP7-MPNXBO-T-SS	9MP7-MANXBO-T-SS	Pages 44-56
9MP7-MPNXBO-T-SS-LTB	9MP7-MANXBO-T-SS-LTB	Pages 44-56
9MP7-MPNXRD-G-SS-HT	9MP7-MANXRD-GY-SS-HT	Pages 44-56
9MP7-MPNXRDH-T-SS	9MP7-MANXRD-T-SS	Pages 44-56
9MP7-MPNXRDH-T-SS-LTB	9MP7-MANXRD-T-SS-LTB	Pages 44-56
9MP7-MPNXRD-T-SS	9MP7-MANXRD-T-SS	Pages 44-56
9MP7-MPNXRD-T-SS-LTB	9MP7-MANXRD-T-SS-LTB	Pages 44-56
9MP7-MPNXRI-G-SS-HT	9MP7-MANXRI-GY-SS-HT	Pages 44-56
9MP7-MPNXRIH-T-SS	9MP7-MANXRI-T-SS	Pages 44-56
9MP7-MPNXRIH-T-SS-LTB	9MP7-MANXRI-T-SS-LTB	Pages 44-56
9MP7-MPNXRI-T-SS	9MP7-MANXRI-T-SS	Pages 44-56
9MP7-MPNXRI-T-SS-LTB	9MP7-MANXRI-T-SS-LTB	Pages 44-56
9MP7-MPNXRO-G-SS-HT	9MP7-MANXRO-GY-SS-HT	Pages 44-56
9MP7-MPNXROH-T-SS	9MP7-MANXRO-T-SS	Pages 44-56

MPI™ Part Numbers Sold Prior to July 2015 (includes Catalog 4234)	New Part Number	Additional Catalog Needed
9MP7-MPNXROH-T-SS-LTB	9MP7-MANXRO-T-SS-LTB	Pages 44-56
9MP7-MPNXRO-T-SS	9MP7-MANXRO-T-SS	Pages 44-56
9MP7-MPNXRO-T-SS-LTB	9MP7-MANXRO-T-SS-LTB	Pages 44-56
9T7-MPBV-V-SS	9T7-MABV-V-SS	Page 60
12F-MAB12LPK-BN-SSP	2B12S10P12-BO	PAE Ball Valve
12F-MAB12LPK-EPR-SSP	2B12S10P12-EPR	PAE Ball Valve
12F-MAB12LPK-KZ-SSP	2B12S10P12-C	PAE Ball Valve
12F-MAB12LPK-V-SSP	2B12S10P12	PAE Ball Valve
12F-MAB6LPK-BN-SSP	2B6S10P12-BO	PAE Ball Valve
12F-MAB6LPK-EPR-SSP	2B6S10P12-EPR	PAE Ball Valve
12F-MAB6LPK-KZ-SSP	2B6S10P12-HT	PAE Ball Valve
12F-MAB6LPK-V-SSP	2B6S10P12	PAE Ball Valve
12F-MAB8LPK-BN-SSP	2B8S10P12-BO	PAE Ball Valve
12F-MAB8LPK-EPR-SSP	2B8S10P12-EPR	PAE Ball Valve
12F-MAB8LPK-KZ-SSP	2B8S10P12-HT	PAE Ball Valve
12F-MAB8LPK-V-SSP	2B8S10P12	PAE Ball Valve
12F-MAB8XPK-BN-SSP	3B8S10P12-BO	PAE Ball Valve
12F-MAB8XPKD-BN-SSP	3BD8S10P12-BO	PAE Ball Valve
12F-MAB8XPKD-EPR-SSP	3BD8S10P12-EPR	PAE Ball Valve
12F-MAB8XPKD-KZ-SSP	3BD8S10P12-C	PAE Ball Valve
12F-MAB8XPKD-V-SSP	3BD8S10P12	PAE Ball Valve
12F-MAB8XPK-EPR-SSP	3B8S10P12-EPR	PAE Ball Valve
12F-MAB8XPK-KZ-SSP	3B8S10P12-C	PAE Ball Valve
12F-MAB8XPK-V-SSP	3B8S10P12	PAE Ball Valve
12F-MACBL-20-SS	CPB12	PAE P Series Fitting/Tubing
12F-MACL-20-V-SS	CPO12	PAE P Series Fitting/Tubing
12F-MADBB10LPK-BN-SS	10DB10P12P4-BO	PAE Ball Valve
12F-MADBB10LPK-C-SS	10DB10P12P4-C	PAE Ball Valve
12F-MADBB10LPK-EPR-SS	10DB10P12P4-EPR	PAE Ball Valve
12F-MADBB10LPK-V-SS	10DB10P12P4	PAE Ball Valve
12F-MADBB6LPK-BN-SS	6DB10P12P4-BO	PAE Ball Valve
12F-MADBB6LPK-EPR-SS	6DB10P12P4-EPR	PAE Ball Valve
12F-MADBB6LPK-KZ-SS	6DB10P12P4-HT	PAE Ball Valve
12F-MADBB6LPK-V-SS	6DB10P12P4	PAE Ball Valve
12F-MANAB-T-SS	10P12083	PAE P Series Needle Valve
12F-MANAR-T-SS	10P12082	PAE P Series Needle Valve
12F-MANLB-T-SS	10P12071	PAE P Series Needle Valve
12F-MANLR-T-SS	10P12081	PAE P Series Needle Valve
12F-MANXBD-T-SS	10P12075	PAE P Series Needle Valve
12F-MANXBI-T-SS	10P12073	PAE P Series Needle Valve
12F-MANXBO-T-SS	10P12074	PAE P Series Needle Valve
12F-MANXRD-T-SS	10P12085	PAE P Series Needle Valve
12F-MANXRI-T-SS	10P12083	PAE P Series Needle Valve
12F-MANXRO-T-SS	10P12084	PAE P Series Needle Valve
12F-MPBLPKH-BN-SSP	2B6S10P12-BO	PAE Ball Valve
12F-MPBLPKH-EPR-SSP	2B6S10P12-EPR	PAE Ball Valve
12F-MPBLPKH-KZ-SSP	2B6S10P12-HT	PAE Ball Valve
12F-MPBLPKH-V-SSP	2B6S10P12	PAE Ball Valve
12F-MPBLPKUH-BN-SSP	2B8S10P12-BO	PAE Ball Valve
12F-MPBLPKUH-EPR-SSP	2B8S10P12-EPR	PAE Ball Valve
12F-MPBLPKUH-KZ-SSP	2B8S10P12-HT	PAE Ball Valve
12F-MPBLPKUH-V-SSP	2B8S10P12	PAE Ball Valve
12F-MPBXPKDUH-BN-SSP	3BD8S10P12-BO	PAE Ball Valve
12F-MPBXPKDUH-EPR-SSP	3BD8S10P12-EPR	PAE Ball Valve
12F-MPBXPKDUH-KZ-SSP	3BD8S10P12-C	PAE Ball Valve
12F-MPBXPKDUH-V-SSP	3BD8S10P12	PAE Ball Valve
12F-MPBXPKUH-BN-SSP	3B8S10P12-BO	PAE Ball Valve
12F-MPBXPKUH-EPR-SSP	3B8S10P12-EPR	PAE Ball Valve
12F-MPBXPKUH-KZ-SSP	3B8S10P12-C	PAE Ball Valve
12F-MPBXPKUH-V-SSP	3B8S10P12	PAE Ball Valve
12F-MPCBL-5-SS	CPB12	PAE P Series Fitting/ Tubing
12F-MPCL-5-V-SS	CPO12	PAE P Series Fitting/Tubing
12F-MPNAB-T-SS	10P12083	PAE P Series Needle Valve
12F-MPNAR-T-SS	10P12082	PAE P Series Needle Valve
12F-MPNLB-T-SS	10P12071	PAE P Series Needle Valve
12F-MPNLR-T-SS	10P12081	PAE P Series Needle Valve
12F-MPNXBD-T-SS	10P12075	PAE P Series Needle Valve
12F-MPNXBI-T-SS	10P12073	PAE P Series Needle Valve
12F-MPNXBO-T-SS	10P12074	PAE P Series Needle Valve
12F-MPNXRD-T-SS	10P12085	PAE P Series Needle Valve
12F-MPNXRI-T-SS	10P12083	PAE P Series Needle Valve
12F-MPNXRO-T-SS	10P12084	PAE P Series Needle Valve
12MP7-MABLPKPUH-BN-SSP	12MP7-MAB8LPK-BN-SSP	Pages 63-67

Note: Catalogs with a "**PAE**" (Parker Autoclave Engineers) reference can be viewed at **autoclave.com** or by downloading our PAE Catalog Hub…**Click here**!

MPI™ Part Numbers Sold Prior to July 2015 (includes Catalog 4234)	New Part Number	Additional Catalog Needed
12MP7-MABLPKPUH-BN-SSP-LD	12MP7-MAB8LPK-BN-SSP-LD	Pages 63-67
12MP7-MABLPKPUH-KZ-SSP	12MP7-MAB8LPK-KZ-SSP	Pages 63-67
12MP7-MANABH-T-SS	12MP7-MANAB-T-SS	Pages 44-56
12MP7-MANABH-T-SS-XF	12MP7-MANAB-T-SS-XF	Pages 44-56
12MP7-MANABRH-T-SS	12MP7-MANABR-T-SS	Pages 44-56
12MP7-MANABRH-T-SS-XF	12MP7-MANABR-T-SS-XF	Pages 44-56
12MP7-MANARH-T-SS	12MP7-MANAR-T-SS	Pages 44-56
12MP7-MANARH-T-SS-XF	12MP7-MANAR-T-SS-XF	Pages 44-56
12MP7-MANARRH-T-SS	12MP7-MANARR-T-SS	Pages 44-56
12MP7-MANARRH-T-SS-XF	12MP7-MANARR-T-SS-XF	Pages 44-56
12MP7-MANLBH-T-SS	12MP7-MANLB-T-SS	Pages 44-56
12MP7-MANLBH-T-SS	12MP7-MANLB-T-SS	Pages 44-56
12MP7-MANLBH-T-SS-XF	12MP7-MANLB-T-SS-XF	Pages 44-56
12MP7-MANLRH-T-SS	12MP7-MANLR-T-SS	Pages 44-56
12MP7-MANLRH-T-SS-XF	12MP7-MANLR-T-SS-XF	Pages 44-56
12MP7-MANXBDH-T-SS	12MP7-MANXBD-T-SS	Pages 44-56
12MP7-MANXBDH-T-SS-XF	12MP7-MANXBD-T-SS-XF	Pages 44-56
12MP7-MANXBIH-T-SS	12MP7-MANXBI-T-SS	Pages 44-56
12MP7-MANXBIH-T-SS-XF	12MP7-MANXBI-T-SS-XF	Pages 44-56
12MP7-MANXBOH-T-SS	12MP7-MANXBO-T-SS	Pages 44-56
12MP7-MANXBOH-T-SS-XF	12MP7-MANXBO-T-SS-XF	Pages 44-56
12MP7-MANXRDH-T-SS	12MP7-MANXRD-T-SS	Pages 44-56
12MP7-MANXRDH-T-SS-XF	12MP7-MANXRD-T-SS-XF	Pages 44-56
12MP7-MANXRIH-T-SS	12MP7-MANXRI-T-SS	Pages 44-56
12MP7-MANXRIH-T-SS-XF	12MP7-MANXRI-T-SS-XF	Pages 44-56
12MP7-MANXROH-T-SS	12MP7-MANXRO-T-SS	Pages 44-56
12MP7-MANXROH-T-SS-XF	12MP7-MANXRO-T-SS-XF	Pages 44-56
12MP7-MPBLPKH-BN-SSP	12MP7-MAB6LPK-BN-SSP	Pages 60-76
12MP7-MPBLPKH-BN-SSP-LD	12MP7-MAB6LPK-BN-SSP-LD	Pages 60-76
12MP7-MPBLPKH-EPR-SSP	12MP7-MAB6LPK-EPR-SSP	Pages 60-76
12MP7-MPBLPKH-EPR-SSP-LD	12MP7-MAB6LPK-EPR-SSP-LD	Pages 60-76
12MP7-MPBLPKH-KZ-SSP	12MP7-MAB6LPK-KZ-SSP	Pages 60-76
12MP7-MPBLPKH-KZ-SSP-LD	12MP7-MAB6LPK-KZ-SSP-LD	Pages 60-76
12MP7-MPBLPKH-V-SSP	12MP7-MAB6LPK-V-SSP	Pages 60-76
12MP7-MPBLPKH-V-SSP-LD	12MP7-MAB6LPK-V-SSP-LD	Pages 60-76
12MP7-MPBLPKUH-BN-SSP	12MP7-MAB8LPK-BN-SSP	Pages 60-76
12MP7-MPBLPKUH-BN-SSP-LD	12MP7-MAB8LPK-BN-SSP-LD	Pages 60-76
12MP7-MPBLPKUH-EPR-SSP	12MP7-MAB8LPK-EPR-SSP	Pages 60-76
12MP7-MPBLPKUH-EPR-SSP-LD	12MP7-MAB8LPK-EPR-SSP-LD	Pages 60-76
12MP7-MPBLPKUH-KZ-SSP	12MP7-MAB8LPK-KZ-SSP	Pages 60-76
12MP7-MPBLPKUH-KZ-SSP-LD	12MP7-MAB8LPK-KZ-SSP-LD	Pages 60-76
12MP7-MPBLPKUH-V-SSP	12MP7-MAB8LPK-V-SSP	Pages 60-76
12MP7-MPBLPKUH-V-SSP-LD	12MP7-MAB8LPK-V-SSP-LD	Pages 60-76
12MP7-MPBXPKDH-BN-SSP	12MP7-MAB6XPKD-BN-SSP	Pages 60-76
12MP7-MPBXPKDH-BN-SSP-LD	12MP7-MAB6XPKD-BN-SSP-LD	Pages 60-76
12MP7-MPBXPKDH-EPR-SSP	12MP7-MAB8XPKD-EPR-SSP	Pages 60-76
12MP7-MPBXPKDH-EPR-SSP-LD	12MP7-MAB8XPKD-EPR-SSP-LD	Pages 60-76
12MP7-MPBXPKDH-KZ-SSP	12MP7-MAB8XPKD-KZ-SSP	Pages 60-76
12MP7-MPBXPKDH-KZ-SSP-LD	12MP7-MAB8XPKD-KZ-SSP-LD	Pages 60-76
12MP7-MPBXPKDH-V-SSP	12MP7-MAB6XPKD-V-SSP	Pages 60-76
12MP7-MPBXPKDH-V-SSP-LD	12MP7-MAB6XPKD-V-SSP-LD	Pages 60-76
12MP7-MPBXPKDUH-BN-SSP	12MP7-MAB8XPKD-BN-SSP	Pages 60-76
12MP7-MPBXPKDUH-EPR-SSP	12MP7-MAB8XPKD-EPR-SSP	Pages 60-76
12MP7-MPBXPKDUH-KZ-SSP	12MP7-MAB8XPKD-C-SSP	Pages 60-76
12MP7-MPBXPKDUH-V-SSP	12MP7-MAB8XPKD-V-SSP	Pages 60-76
12MP7-MPBXPKH-BN-SSP	12MP7-MAB6XPKD-BN-SSP	Pages 60-76
12MP7-MPBXPKH-EPR-SSP	12MP7-MAB6XPKD-EPR-SSP	Pages 60-76
12MP7-MPBXPKH-KZ-SSP	12MP7-MAB6XPKD-HT-SSP	Pages 60-76
12MP7-MPBXPKH-V-SSP	12MP7-MAB6XPKD-V-SSP	Pages 60-76
12MP7-MPBXPKUH-BN-SSP	12MP7-MAB8XPK-BN-SSP	Pages 60-76
12MP7-MPBXPKUH-EPR-SSP	12MP7-MAB8XPK-EPR-SSP	Pages 60-76
12MP7-MPBXPKUH-KZ-SSP	12MP7-MAB8XPK-KZ-SSP	Pages 60-76
12MP7-MPBXPKUH-V-SSP	12MP7-MAB8XPK-V-SSP	Pages 60-76
12MP7-MPCBL-5-SS	See 12MP7-MACBL-20-SS	Page 83
12MP7-MPCBL-80-SS	12MP7-MACBL-80-SS	Page 83
12MP7-MPCL-5-BN-SS	See 12MP7-MACL-20-BN-SS	Page 83
12MP7-MPCL-5-EPR-SS	See 12MP7-MACL-20-EPR-SS	Page 83
12MP7-MPCL-5-KZ-SS	See 12MP7-MACL-20-KZ-SS	Page 83
12MP7-MPCL-5-T-SS	See 12MP7-MACL-20-TO-SS	Page 83
12MP7-MPCL-5-V-SS	See 12MP7-MACL-20-V-SS	Page 83
12MP7-MPCL-80-KZ-SS	12MP7-MACL-80-KZ-SS	Page 83
12MP7-MPCL-80-T-SS	12MP7-MACL-80-TO-SS	Page 83
12MP7-MPCL-80-V-SS	12MP7-MACL-80-V-SS	Page 83

MPI™ Part Numbers Sold Prior to July 2015 (includes Catalog 4234)	New Part Number	Additional Catalog Needed
12MP7-MPFL-35-SS	12MP7-MAFCL-35-SS	Pages 81-82
12MP7-MPFL-5-SS	12MP7-MAFCL-5-SS	Pages 81-82
12MP7-MPFL-65-SS	12MP7-MAFCL-65-SS	Pages 81-82
12MP7-MPNAB-G-SS-HT	12MP7-MANAB-GY-SS-HT	Pages 44-56
12MP7-MPNABH-T-SS	12MP7-MANAB-T-SS	Pages 44-56
12MP7-MPNABH-T-SS-XF	12MP7-MANAB-T-SS-XF	Pages 44-56
12MP7-MPNABR-G-SS-HT	12MP7-MANABR-GY-SS-HT	Pages 44-56
12MP7-MPNABRH-T-SS	12MP7-MANABR-T-SS	Pages 44-56
12MP7-MPNABRH-T-SS-XF	12MP7-MANABR-T-SS-XF	Pages 44-56
12MP7-MPNABR-T-SS	12MP7-MANABR-T-SS	Pages 44-56
12MP7-MPNABR-T-SS-XF	12MP7-MANABR-T-SS-XF	Pages 44-56
12MP7-MPNAB-T-SS	12MP7-MANAB-T-SS	Pages 44-56
12MP7-MPNAB-T-SS-XF	12MP7-MANAB-T-SS-XF	Pages 44-56
12MP7-MPNAR-G-SS-HT	12MP7-MANAR-GY-SS-HT	Pages 44-56
12MP7-MPNARH-T-SS	12MP7-MANAR-T-SS	Pages 44-56
12MP7-MPNARH-T-SS-XF	12MP7-MANAR-T-SS-XF	Pages 44-56
12MP7-MPNARR-G-SS-HT	12MP7-MANARR-GY-SS-HT	Pages 44-56
12MP7-MPNARRH-T-SS	12MP7-MANARR-T-SS	Pages 44-56
12MP7-MPNARRH-T-SS-XF	12MP7-MANARR-T-SS-XF	Pages 44-56
12MP7-MPNARR-T-SS	12MP7-MANARR-T-SS	Pages 44-56
12MP7-MPNARR-T-SS-XF	12MP7-MANARR-T-SS-XF	Pages 44-56
12MP7-MPNAR-T-SS	12MP7-MANAR-T-SS	Pages 44-56
12MP7-MPNAR-T-SS-XF	12MP7-MANAR-T-SS-XF	Pages 44-56
12MP7-MPNLB-G-SS-HT	12MP7-MANLB-GY-SS-HT	Pages 44-56
12MP7-MPNLBH-T-SS	12MP7-MANLB-T-SS	Pages 44-56
12MP7-MPNLBH-T-SS-XF	12MP7-MANLB-T-SS-XF	Pages 44-56
12MP7-MPNLB-T-SS	12MP7-MANLB-T-SS	Pages 44-56
12MP7-MPNLB-T-SS-LT	12MP7-MANLB-T-SS-LTB	Pages 44-56
12MP7-MPNLB-T-SS-XF	12MP7-MANLB-T-SS-XF	Pages 44-56
12MP7-MPNLR-G-SS-HT	12MP7-MANLR-GY-SS-HT	Pages 44-56
12MP7-MPNLRH-T-SS	12MP7-MANLR-T-SS	Pages 44-56
12MP7-MPNLRH-T-SS-XF	12MP7-MANLR-T-SS-XF	Pages 44-56
12MP7-MPNLR-T-SS	12MP7-MANLR-T-SS	Pages 44-56
12MP7-MPNLR-T-SS-XF	12MP7-MANLR-T-SS-XF	Pages 44-56
12MP7-MPNXBD-G-SS-HT	12MP7-MANXBD-GY-SS-HT	Pages 44-56
12MP7-MPNXBDH-T-SS	12MP7-MANXBD-T-SS	Pages 44-56
12MP7-MPNXBDH-T-SS-XF	12MP7-MANXBD-T-SS-XF	Pages 44-56
12MP7-MPNXBD-T-SS	12MP7-MANXBD-T-SS	Pages 44-56
12MP7-MPNXBD-T-SS-XF	12MP7-MANXBD-T-SS-XF	Pages 44-56
12MP7-MPNXBI-G-SS-HT	12MP7-MANXBI-GY-SS-HT	Pages 44-56
12MP7-MPNXBIH-T-SS	12MP7-MANXBI-T-SS	Pages 44-56
12MP7-MPNXBIH-T-SS-XF	12MP7-MANXBI-T-SS-XF	Pages 44-56
12MP7-MPNXBI-T-SS	12MP7-MANXBI-T-SS	Pages 44-56
12MP7-MPNXBI-T-SS-XF	12MP7-MANXBI-T-SS-XF	Pages 44-56
12MP7-MPNXBO-G-SS-HT	12MP7-MANXBO-GY-SS-HT	Pages 44-56
12MP7-MPNXBOH-T-SS	12MP7-MANXBO-T-SS	Pages 44-56
12MP7-MPNXBOH-T-SS-XF	12MP7-MANXBO-T-SS-XF	Pages 44-56
12MP7-MPNXBO-T-SS	12MP7-MANXBO-T-SS	Pages 44-56
12MP7-MPNXBO-T-SS-XF	12MP7-MANXBO-T-SS-XF	Pages 44-56
12MP7-MPNXRD-G-SS-HT	12MP7-MANXRD-GY-SS-HT	Pages 44-56
12MP7-MPNXRDH-T-SS	12MP7-MANXRD-T-SS	Pages 44-56
12MP7-MPNXRDH-T-SS-XF	12MP7-MANXRD-T-SS-XF	Pages 44-56
12MP7-MPNXRD-T-SS	12MP7-MANXRD-T-SS	Pages 44-56
12MP7-MPNXRD-T-SS-XF	12MP7-MANXRD-T-SS-XF	Pages 44-56
12MP7-MPNXRI-G-SS-HT	12MP7-MANXRI-GY-SS-HT	Pages 44-56
12MP7-MPNXRIH-T-SS	12MP7-MANXRI-T-SS	Pages 44-56
12MP7-MPNXRIH-T-SS-XF	12MP7-MANXRI-T-SS-XF	Pages 44-56
12MP7-MPNXRI-T-SS	12MP7-MANXRI-T-SS	Pages 44-56
12MP7-MPNXRI-T-SS-XF	12MP7-MANXRI-T-SS-XF	Pages 44-56
12MP7-MPNXRO-G-SS-HT	12MP7-MANXRO-GY-SS-HT	Pages 44-56
12MP7-MPNXROH-T-SS	12MP7-MANXRO-T-SS	Pages 44-56
12MP7-MPNXROH-T-SS-XF	12MP7-MANXRO-T-SS-XF	Pages 44-56
12MP7-MPNXRO-T-SS	12MP7-MANXRO-T-SS	Pages 44-56
12MP7-MPNXRO-T-SS-XF	12MP7-MANXRO-T-SS-XF	Pages 44-56
16F-MAB12LPK-BN-SSP	2B12S10P16-BO	PAE Ball Valve
16F-MAB12LPK-EPR-SSP	2B12S10P16-EPR	PAE Ball Valve
16F-MAB12LPK-KZ-SSP	2B12S10P16-C	PAE Ball Valve
16F-MAB12LPK-V-SSP	2B12S10P16	PAE Ball Valve
16F-MAB8LPK-BN-SSP	2B8S10P16-BO	PAE Ball Valve
16F-MAB8LPK-EPR-SSP	2B8S10P16-EPR	PAE Ball Valve
16F-MAB8LPK-KZ-SSP	2B8S10P16-HT	PAE Ball Valve
16F-MAB8LPK-V-SSP	2B8S10P16	PAE Ball Valve
16F-MAB8XPK-BN-SSP	3B8S10P16-BO	PAE Ball Valve

Note: Catalogs with a "**PAE**" (Parker Autoclave Engineers) reference can be viewed at **autoclave.com** or by downloading our PAE Catalog Hub...**Click here**!

MPI™ Part Numbers Sold Prior to July 2015 (includes Catalog 4234)	New Part Number	Additional Catalog Needed
16F-MAB8XPKD-BN-SSP	3BD8S10P16-BO	PAE Ball Valve
16F-MAB8XPKD-EPR-SSP	3BD8S10P16-EPR	PAE Ball Valve
16F-MAB8XPKD-KZ-SSP	3BD8S10P16-C	PAE Ball Valve
16F-MAB8XPKD-V-SSP	3BD8S10P16	PAE Ball Valve
16F-MAB8XPK-EPR-SSP	3B8S10P16-EPR	PAE Ball Valve
16F-MAB8XPK-KZ-SSP	3B8S10P16-C	PAE Ball Valve
16F-MAB8XPK-V-SSP	3B8S10P16	PAE Ball Valve
16F-MACBL-20-SS	CPB16	PAE P Series Fitting/Tubing
16F-MACL-20-V-SS	CPO16	PAE P Series Fitting/Tubing
16F-MADBB10LPK-BN-SS	10DB10P16P4-BO	PAE Ball Valve
16F-MADBB10LPK-C-SS	10DB10P16P4-C	PAE Ball Valve
16F-MADBB10LPK-EPR-SS	10DB10P16P4-EPR	PAE Ball Valve
16F-MADBB10LPK-V-SS	10DB10P16P4	PAE Ball Valve
16F-MADBB6LPK-BN-SS	6DB10P16P4-BO	PAE Ball Valve
16F-MADBB6LPK-EPR-SS	6DB10P16P4-EPR	PAE Ball Valve
16F-MADBB6LPK-KZ-SS	6DB10P16P4-HT	PAE Ball Valve
16F-MADBB6LPK-V-SS	6DB10P16P4	PAE Ball Valve
16F-MANAB-T-SS	10P16083	PAE P Series Needle Valve
16F-MANAR-T-SS	10P16082	PAE P Series Needle Valve
16F-MANLB-T-SS	10P16071	PAE P Series Needle Valve
16F-MANLR-T-SS	10P16081	PAE P Series Needle Valve
16F-MANXBD-T-SS	10P16075	PAE P Series Needle Valve
16F-MANXBI-T-SS	10P16073	PAE P Series Needle Valve
16F-MANXBO-T-SS	10P16074	PAE P Series Needle Valve
16F-MANXRD-T-SS	10P16085	PAE P Series Needle Valve
16F-MANXRI-T-SS	10P16083	PAE P Series Needle Valve
16F-MANXRO-T-SS	10P16084	PAE P Series Needle Valve
16F-MPBLPKUH-BN-SSP	2B8S10P16-BO	PAE Ball Valve
16F-MPBLPKUH-EPR-SSP	2B8S10P16-EPR	PAE Ball Valve
16F-MPBLPKUH-KZ-SSP	2B8S10P16-HT	PAE Ball Valve
16F-MPBLPKUH-V-SSP	2B8S10P16	PAE Ball Valve
16F-MPBXPKDUH-BN-SSP	3BD8S10P16-BO	PAE Ball Valve
16F-MPBXPKDUH-EPR-SSP	3BD8S10P16-EPR	PAE Ball Valve
16F-MPBXPKDUH-KZ-SSP	3BD8S10P16-C	PAE Ball Valve
16F-MPBXPKDUH-V-SSP	3BD8S10P16	PAE Ball Valve
16F-MPBXPKUH-BN-SSP	3B8S10P16-BO	PAE Ball Valve
16F-MPBXPKUH-EPR-SSP	3B8S10P16-EPR	PAE Ball Valve
16F-MPBXPKUH-KZ-SSP	3B8S10P16-C	PAE Ball Valve
16F-MPBXPKUH-V-SSP	3B8S10P16	PAE Ball Valve
16F-MPCBL-5-SS	CPB16	PAE P Series Fitting/Tubing
16F-MPCL-5-V-SS	CPO16	PAE P Series Fitting/Tubing
16F-MPNAB-T-SS	10P16083	PAE P Series Needle Valve
16F-MPNAR-T-SS	10P16082	PAE P Series Needle Valve
16F-MPNLB-T-SS	10P16071	PAE P Series Needle Valve
16F-MPNLR-T-SS	10P16081	PAE P Series Needle Valve
16F-MPNXBD-T-SS	10P16075	PAE P Series Needle Valve
16F-MPNXBI-T-SS	10P16073	PAE P Series Needle Valve
16F-MPNXBO-T-SS	10P16074	PAE P Series Needle Valve
16F-MPNXRD-T-SS	10P16085	PAE P Series Needle Valve
16F-MPNXRI-T-SS	10P16083	PAE P Series Needle Valve
16F-MPNXRO-T-SS	10P16084	PAE P Series Needle Valve
16MP7-MABLPKPUH-BN-SSP	16MP7-MAB8LPK-BN-SSP	Pages 60-76
16MP7-MABLPKPUH-KZ-SSP	16MP7-MAB8LPK-KZ-SSP	Pages 60-76
16MP7-MANABH-T-SS	16MP7-MANAB-T-SS	Pages 44-56
16MP7-MANABRH-T-SS	16MP7-MANABR-T-SS	Pages 44-56
16MP7-MANARH-T-SS	16MP7-MANAR-T-SS	Pages 44-56
16MP7-MANARRH-T-SS	16MP7-MANARR-T-SS	Pages 44-56
16MP7-MANLBH-T-SS	16MP7-MANLB-T-SS	Pages 44-56
16MP7-MANLRH-T-SS	16MP7-MANLR-T-SS	Pages 44-56
16MP7-MANXBDH-T-SS	16MP7-MANXBD-T-SS	Pages 44-56
16MP7-MANXBIH-T-SS	16MP7-MANXBI-T-SS	Pages 44-56
16MP7-MANXBOH-T-SS	16MP7-MANXBO-T-SS	Pages 44-56
16MP7-MANXRDH-T-SS	16MP7-MANXRD-T-SS	Pages 44-56
16MP7-MANXRIH-T-SS	16MP7-MANXRI-T-SS	Pages 44-56
16MP7-MANXROH-T-SS	16MP7-MANXRO-T-SS	Pages 44-56
16MP7-MPBLPKH-BN-SSP	USE 16MP7-MAB8LPK-BN-SSP	Pages 60-76
16MP7-MPBLPKH-EPR-SSP	USE 16MP7-MAB8LPK-EPR-SSP	Pages 60-76
16MP7-MPBLPKH-KZ-SSP	USE 16MP7-MAB8LPK-KZ-SSP	Pages 60-76
16MP7-MPBLPKH-V-SSP	USE 16MP7-MAB8LPK-V-SSP	Pages 60-76
16MP7-MPBLPKH-V-SSP-LD	USE 16MP7-MAB8LPK-BN-SSP-LD	Pages 60-76

MPI™ Part Numbers Sold Prior to July 2015 (includes Catalog 4234)	New Part Number	Additional Catalog Needed
16MP7-MPBLPKUH-BN-SSP	16MP7-MAB8LPK-BN-SSP	Pages 60-76
16MP7-MPBLPKUH-BN-SSP-LD	16MP7-MAB8LPK-BN-SSP-LD	Pages 60-76
16MP7-MPBLPKUH-EPR-SSP	16MP7-MAB8LPK-EPR-SSP	Pages 60-76
16MP7-MPBLPKUH-EPR-SSP-LD	16MP7-MAB8LPK-EPR-SSP-LD	Pages 60-76
16MP7-MPBLPKUH-KZ-SSP	16MP7-MAB8LPK-KZ-SSP	Pages 60-76
16MP7-MPBLPKUH-KZ-SSP-LD	16MP7-MAB8LPK-KZ-SSP-LD	Pages 60-76
16MP7-MPBLPKUH-V-SSP	16MP7-MAB8LPK-V-SSP	Pages 60-76
16MP7-MPBLPKUH-V-SSP-LD	16MP7-MAB8LPK-V-SSP-LD	Pages 60-76
16MP7-MPBXPKDH-BN-SSP	USE 16MP7-MAB8XPKD-BN-SSP	Pages 60-76
16MP7-MPBXPKDH-EPR-SSP	USE 16MP7-MAB8XPKD-EPR-SSP	Pages 60-76
16MP7-MPBXPKDH-KZ-SSP	USE 16MP7-MAB8XPKD-KZ-SSP	Pages 60-76
16MP7-MPBXPKDH-V-SSP	USE 16MP7-MAB8XPKD-V-SSP	Pages 60-76
16MP7-MPBXPKDUH-BN-SSP	16MP7-MAB8XPKD-BN-SSP	Pages 60-76
16MP7-MPBXPKDUH-EPR-SSP	16MP7-MAB8XPKD-EPR-SSP	Pages 60-76
16MP7-MPBXPKDUH-KZ-SSP	16MP7-MAB8XPKD-C-SSP	Pages 60-76
16MP7-MPBXPKDUH-V-SSP	16MP7-MAB8XPKD-V-SSP	Pages 60-76
16MP7-MPBXPKH-BN-SSP	USE 16MP7-MAB8XPK-BN-SSP	Pages 60-76
16MP7-MPBXPKH-EPR-SSP	USE 16MP7-MAB8XPK-EPR-SSP	Pages 60-76
16MP7-MPBXPKH-KZ-SSP	USE 16MP7-MAB8XPK-KZ-SSP	Pages 60-76
16MP7-MPBXPKH-V-SSP	USE 16MP7-MAB8XPK-V-SSP	Pages 60-76
16MP7-MPBXPKH-V-SSP-LD	USE 16MP7-MAB8XPK-V-SSP-LD	Pages 60-76
16MP7-MPBXPKUH-BN-SSP	16MP7-MAB8XPK-BN-SSP	Pages 60-76
16MP7-MPBXPKUH-EPR-SSP	16MP7-MAB8XPK-EPR-SSP	Pages 60-76
16MP7-MPBXPKUH-KZ-SSP	16MP7-MAB8XPK-C-SSP	Pages 60-76
16MP7-MPBXPKUH-V-SSP	16MP7-MAB8XPK-V-SSP	Pages 60-76
16MP7-MPCBL-5-SS	See 16MP7-MACBL-20-SS	Page 83
16MP7-MPCBL-80-SS	16MP7-MACBL-80-SS	Page 83
16MP7-MPCL-5-BN-SS	See 16MP7-MACL-20-BN-SS	Page 83
16MP7-MPCL-5-KZ-SS	See 16MP7-MACL-20-KZ-SS	Page 83
16MP7-MPCL-5-V-SS	See 16MP7-MACL-20-V-SS	Page 83
16MP7-MPCL-80-KZ-SS	16MP7-MACL-80-KZ-SS	Page 83
16MP7-MPFL-35-SS	16MP7-MAFCL-35-SS	Pages 81-82
16MP7-MPFL-5-SS	16MP7-MAFCL-5-SS	Pages 81-82
16MP7-MPFL-65-SS	16MP7-MAFCL-65-SS	Pages 81-82
16MP7-MPNAB-G-SS-HT	16MP7-MANAB-GY-SS-HT	Pages 44-56
16MP7-MPNABH-T-SS	16MP7-MANAB-T-SS	Pages 44-56
16MP7-MPNABR-G-SS-HT	16MP7-MANABR-GY-SS-HT	Pages 44-56
16MP7-MPNABRH-T-SS	16MP7-MANABR-T-SS	Pages 44-56
16MP7-MPNABR-T-SS	16MP7-MANABR-T-SS	Pages 44-56
16MP7-MPNAB-T-SS	16MP7-MANAB-T-SS	Pages 44-56
16MP7-MPNAR-G-SS-HT	16MP7-MANAR-GY-SS-HT	Pages 44-56
16MP7-MPNARH-T-SS	16MP7-MANAR-T-SS	Pages 44-56
16MP7-MPNARR-G-SS-HT	16MP7-MANARR-GY-SS-HT	Pages 44-56
16MP7-MPNARRH-T-SS	16MP7-MANARR-T-SS	Pages 44-56
16MP7-MPNARR-T-SS	16MP7-MANARR-T-SS	Pages 44-56
16MP7-MPNAR-T-SS	16MP7-MANAR-T-SS	Pages 44-56
16MP7-MPNLB-G-SS-HT	16MP7-MANLB-GY-SS-HT	Pages 44-56
16MP7-MPNLBH-T-SS	16MP7-MANLB-T-SS	Pages 44-56
16MP7-MPNLB-T-SS	16MP7-MANLB-T-SS	Pages 44-56
16MP7-MPNLR-G-SS-HT	16MP7-MANLR-GY-SS-HT	Pages 44-56
16MP7-MPNLRH-T-SS	16MP7-MANLR-T-SS	Pages 44-56
16MP7-MPNLR-T-SS	16MP7-MANLR-T-SS	Pages 44-56
16MP7-MPNXBD-G-SS-HT	16MP7-MANXBD-GY-SS-HT	Pages 44-56
16MP7-MPNXBDH-T-SS	16MP7-MANXBD-T-SS	Pages 44-56
16MP7-MPNXBD-T-SS	16MP7-MANXBD-T-SS	Pages 44-56
16MP7-MPNXBI-G-SS-HT	16MP7-MANXBI-GY-SS-HT	Pages 44-56
16MP7-MPNXBIH-T-SS	16MP7-MANXBI-T-SS	Pages 44-56
16MP7-MPNXBI-T-SS	16MP7-MANXBI-T-SS	Pages 44-56
16MP7-MPNXBO-G-SS-HT	16MP7-MANXBO-GY-SS-HT	Pages 44-56
16MP7-MPNXBOH-T-SS	16MP7-MANXBO-T-SS	Pages 44-56
16MP7-MPNXBO-T-SS	16MP7-MANXBO-T-SS	Pages 44-56
16MP7-MPNXRD-G-SS-HT	16MP7-MANXRD-GY-SS-HT	Pages 44-56
16MP7-MPNXRDH-T-SS	16MP7-MANXRD-T-SS	Pages 44-56
16MP7-MPNXRD-T-SS	16MP7-MANXRD-T-SS	Pages 44-56
16MP7-MPNXRI-G-SS-HT	16MP7-MANXRI-GY-SS-HT	Pages 44-56
16MP7-MPNXRIH-T-SS	16MP7-MANXRI-T-SS	Pages 44-56
16MP7-MPNXRI-T-SS	16MP7-MANXRI-T-SS	Pages 44-56
16MP7-MPNXRO-G-SS-HT	16MP7-MANXRO-GY-SS-HT	Pages 44-56
16MP7-MPNXROH-T-SS	16MP7-MANXRO-T-SS	Pages 44-56
16MP7-MPNXRO-T-SS	16MP7-MANXRO-T-SS	Pages 44-56

Note: Catalogs with a "**PAE**" (Parker Autoclave Engineers) reference can be viewed at **autoclave.com** or by downloading our PAE Catalog Hub…**Click here**!

PARKER-HANNIFIN CORPORATION
OFFER OF SALE

1. Definitions. As used herein, the following terms have the meanings indicated."Buyer" means any customer receiving a Quote for Products."Buyer's Property" means any tools, patterns, plans, drawings, designs, specifications materials, equipment, or information furnished by Buyer, or which are or become Buyer's property. "Confidential Information" means any technical, commercial, or other proprietary information of Seller, including, without limitation, pricing, technical drawings or prints and/or part lists, which has been or will be disclosed, delivered, or made available, whether directly or indirectly, to Buyer. "Goods" means any tangible part, system or component to be supplied by Seller. "Intellectual Property Rights" means any patents, trademarks, copyrights, trade dress, trade secrets or similar rights. "Products" means the Goods, Services and/or Software as described in a Quote. "Quote" means the offer or proposal made by Seller to Buyer for the supply of Products. "Seller" means Parker-Hannifin Corporation, including all divisions, subsidiaries and businesses selling Products under these Terms. "Seller's IP" means patents, trademarks, copyrights, or other intellectual property rights relating to the Products, including without limitation, names, designs, images, drawings, models, software, templates, information, any improvements or creations or other intellectual property developed prior to or during the relationship contemplated herein. "Services" means any services to be provided by Seller."Software" means any software related to the Goods, whether embedded or separately downloaded."Special Tooling" means equipment acquired by Seller or otherwise owned by Seller necessary to manufacture Goods, including but not limited to tools, jigs, and fixtures. "Terms" means the terms and conditions of this Offer of Sale.

2. Terms. All sales of Products by Seller will be governed by, and are expressly conditioned upon Buyer's assent to, these Terms. These Terms are incorporated into any Quote provided by Seller to Buyer. Buyer's order for any Products whether communicated to Seller verbally, in writing, by electronic data interface or other electronic commerce, shall constitute acceptance of these Terms. Seller objects to any contrary or additional terms or conditions of Buyer. Reference in Seller's order acknowledgement to Buyer's purchase order or purchase order number shall in no way constitute an acceptance of any of Buyer's terms or conditions of purchase. Any Quote made by Seller to Buyer shall be considered a firm and definite offer and shall notbe deemed to be otherwise despite any language on the face of the Quote. Seller reserves all rights to accept or reject any purported acceptance by Buyer to Seller's Quote if such purported acceptance attempts to vary the terms of the Quote. If Seller ships Products after Buyer issues an acceptance to the Quote, any additional or different terms proposed by Buyer will not become part of the parties' business relationship unless agreed to in a writing that is signed by an authorized representative of Seller, excluding email correspondence. If the transaction proceeds without such agreement on the part of Seller, the business relationship will be governed solely by these Terms and the specific terms in Seller's Quote.

3. Price; Payment. The Products set forth in the Quote are offered for sale at the prices indicated in the Quote. Unless otherwise specifically stated in theQuote, prices are valid for thirty (30) days and do not include any sales, use, or other taxes or duties. Seller reserves the right to modify prices for any reason and at any time by giving ten (10) days prior written notice.Unless otherwise specified by Seller, all prices are F.C.A. Seller's facility (INCOTERMS 2020). All sales are contingent upon credit approval and full payment for all purchases is due thirty (30) days from the date of invoice (or such date as may be specified in the Quote). Under any circumstances, Buyer as a deduction, set-off or recoupment of any amount, claim or dispute with Seller. Unpaid invoices beyond the specified payment date incur interest at the rate of 1.5% per month or the maximum allowable rate under applicable law. Seller reserves the right to require advance payment or provision of securities for first and subsequent deliveries if there is any doubt, in Seller's sole determination, regarding the Buyer's creditworthiness or for other business reasons. If the requested advance payment or securities are not provided to Seller's satisfaction, Seller reserves the right to suspend performance or reject the purchase order, in whole or in part, without prejudice to Seller's other rights or remedies, including the right to full compensation. Seller may revoke or shorten any payment periods previously granted in Seller's sole determination. The rights and remedies herein reserved to Seller are cumulative and in addition to any other or further rights and remedies available at law or in equity. No waiver by Seller of any breach by Buyer of any provision of these terms will constitute a waiver by Seller of any other breach of such provision.

4. Shipment; Delivery; Title and Risk of Loss. All delivery dates are approximate, and Seller is not responsible for damages or additional costs resulting from any delay. All deliveries are subject to our ability to procure materials from our suppliers. Regardless of the manner of shipment, delivery occurs and title and risk of loss or damage pass to Buyer, upon placement of the Products with the carrier at Seller's facility. Unless otherwise agreed prior to shipment and for domestic delivery locations only, Seller will select and arrange, at Buyer's sole expense, the carrier and means of delivery. When Seller selects and arranges the carrier and means of delivery, freight and insurance costs for shipment to the designated delivery location will be prepaid by Seller and added as a separate line item to the invoice. Buyer shall be responsible for any additional shipping charges incurred by Seller due to Buyer's acts or omissions. Buyer shall not return or repackage any Products without the prior written authorization from Seller, and any return shall be at the sole cost and expense of Buyer.

5. Warranty. The warranty for the Products is as follows: (i) Goods are warranted against defects in material or workmanship for a period of twelve (12) months from the date of delivery or 2,000 hours of use, whichever occurs first; (ii) Services shall be performed in accordance with generally accepted practices and using the degree of care and skill that is ordinarily exercised and customary in the field to which the Services pertain and are warranted for a period of six (6) months from the date of completion of the Services; and (iii) Software is only warranted to perform in accordance with applicable specifications provided by Seller to Buyer for ninety (90) days from the date of delivery or, when downloaded by a Buyer or end-user, from the date of the initial download. All prices are based upon the exclusive limited warranty stated above, and upon the following disclaimer:
EXEMPTION CLAUSE; DISCLAIMER OF WARRANTY, CONDITIONS, REPRESENTATIONS: THIS WARRANTY IS THE SOLE AND ENTIRE WARRANTY, CONDITION, AND REPRESENTATION, PERTAINING TO PRODUCTS. SELLER DISCLAIMS ALL OTHER WARRANTIES, CONDITIONS, AND REPRESENTATIONS, WHETHER STATUTORY, EXPRESS OR IMPLIED, INCLUDING BUT NOT LIMITED TO THOSE RELATING TO DESIGN, NONINFRINGEMENT, MERCHANTABILITY, AND FITNESS FOR A PARTICULAR PURPOSE. SELLER DOES NOT WARRANT THAT THE SOFTWARE IS ERROR-FREE OR FAULTTOLERANT, OR THAT BUYER'S USE THEREOF WILL BE SECURE OR UNINTERRUPTED, UNLESS OTHERWISE AUTHORIZED IN WRITING BY SELLER, THE SOFTWARE SHALL NOT BE USED IN CONNECTION WITH HAZARDOUS OR HIGH-RISK ACTIVITIES OR ENVIRONMENTS. EXCEPT AS EXPRESSLY STATED HEREIN, ALL PRODUCTS ARE PROVIDED "AS IS".

6. Claims; Commencement of Actions. Buyer shall promptly inspect all Products upon receipt. No claims for shortages will be allowed unless reportedto Seller within ten (10) days of delivery. Buyer shall notify Seller of any alleged breach of warrantywithin thirty (30) days after the date the nonconformance is or should have been discovered by Buyer. Any claim or action against Seller based upon breach of contract or any other theory, including tort, negligence, or otherwise must be commenced within twelve (12) months from the date of the alleged breach or other alleged event, without regard to the date of discovery.

7. LIMITATION OF LIABILITY. IN THE EVENT OF A BREACH OF WARRANTY, SELLER WILL, AT ITS OPTION, REPAIR OR REPLACE THE NON-CONFORMING PRODUCTS, RE-PERFORM THE SERVICES, OR REFUND THE PURCHASE PRICE PAID WITHIN A REASONABLE PERIOD OF TIME. IN NO EVENT IS SELLER LIABLE FOR ANY SPECIAL, INDIRECT, INCIDENTAL OR CONSEQUENTIAL DAMAGES INCLUDING ANY LOSS OF REVENUE OR PROFITS, WHETHER BASED IN CONTRACT, TORT OR OTHER LEGAL THEORY. IN NO EVENT SHALL SELLER'S LIABILITY UNDER ANY CLAIM MADE BY BUYER EXCEED THE PURCHASE PRICE PAID FOR THE PRODUCTS.

8. Confidential Information. Buyer acknowledges and agrees that Confidential Information has been and will be received in confidence and will remain the property of Seller. Buyer further agrees that it will not use Seller's Confidential Information for any purpose other than for the benefit of Seller and shall return all such Confidential Information to Seller within thirty (30) days upon request.

9. Loss to Buyer's Property. Buyer's Property will be considered obsolete and may be destroyed by Seller after two (2) consecutive years have elapsed without Buyer ordering the Products manufactured using Buyer's Property. Also, Seller shall not be responsible for any loss or damage to Buyer's Property while it is in Seller's possession or control. 10. Special Tooling. Seller may impose a tooling charge for any Special Tooling. Special Tooling shall be and remain Seller's property. In no event will Buyer acquire any interest in the Special Tooling, even if such Special Toolinghas been specially converted or adapted for manufacture of Goods for Buyer and notwithstanding any charges paid by Buyer. Unless otherwise agreed, Seller has the right to alter, discard or otherwise dispose of any Special Tooling or other property owned by Seller in its sole determination at any time.

11. Security Interest. To secure payment of all sums due from Buyer, Seller retains a security interest in all Products delivered to Buyer and, Buyer's acceptance of these Terms is deemed to be a Security Agreement under the Uniform Commercial Code. Buyer authorizes Seller as its attorney to execute and file on Buyer's behalf all documents Seller deems necessary to perfect Seller's security interest.

12. User Responsibility. Buyer, through its own analysis and testing, is solely responsible for making the final selection of the Products and assuring that all performance, endurance, maintenance, safety and warning requirements of the application of the Products are met. Buyer must analyze all aspects of the application and follow applicable industry standards, specifications, and any technical information provided with the Quote or the Products, such as Seller's instructions, guides and specifications. If Seller provides options of or for Products based upon data or specifications provided by Buyer, Buyer is responsible for determining that such data and specifications are suitable and sufficient for all applications and reasonably foreseeable uses of the Products. In the event Buyer is not the end-user of the Products, Buyer will ensure such end-user complies with this paragraph.

13. Use of Products, Indemnity by Buyer. Buyer shall comply with all instructions, guides and specifications provided by Seller with the Quote or the Products. If Buyer uses or resells the Products in any way prohibited bySeller's instructions, guides or specifications, or Buyer otherwise fails to comply with Seller's instructions, guides and specifications, Buyer acknowledges that any such use, resale, or non-compliance is at Buyer's sole risk. Further, Buyer shall indemnify, defend, and hold Seller harmless from anylosses, claims, liabilities, damages, lawsuits, judgments and costs (including attorney fees and defense costs), whether for personal injury, property damage, intellectual property infringement or any other claim, arising out of or in connection with: (a) improper selection, design, specification, application, or any misuse of Products; (b) any act or omission, negligent or otherwise, ofBuyer; (c) Seller's use of Buyer's Property; (d) damage to the Products from an external cause, repair or attempted repair by anyone other than Seller, failure to follow instructions, guides and specifications provided by Seller, use with goods not provided by Seller, or opening, modifying, deconstructing, tampering with or repackaging the Products; or (e) Buyer's failure to comply with these Terms, including any legal or administrative proceedings, collection efforts, or other actions arising from or relating to such failure to comply. Seller shall not indemnify Buyer under any circumstance except as otherwise provided in these Terms.

14. Cancellations and Changes. Buyer may not cancel or modify, including but not limited to movement of delivery dates for the Products, any order for any reason except with Seller's written consent and upon terms that will indemnify, defend and hold Seller harmless against all direct, incidental and consequential loss or damage and any additional expense. Seller, at any time, may change features, specifications, designs and availability of Products.

15. Assignment. Buyer may not assign its rights or obligations without the prior written consent of Seller.

16. Force Majeure. Seller is not liable for delay or failure to perform any of its obligations by reason of any events or circumstances beyond its reasonable control. Such circumstances include without limitation: accidents, labor disputes or stoppages, government acts or orders, acts of nature, pandemics, epidemics, other widespread illness, or public health emergency, cyber related disruptions, cyber-attacks, ransomware sabotage, delays or failures in delivery from carriers or suppliers, shortages of materials, sudden increases in the price of raw material or components, shutdowns or slowdowns affecting the supply of raw materials or components, or the transportation thereof, oil shortages or oil price increases, energy crisis, energy or fuel interruption, war (whether declared or not) or the serious threat of same, riots, rebellions, acts of terrorism, embargoes, fire or any reason whether similar to the foregoing or otherwise. Seller will resume performance as soon as practicable after the event of force majeure has been removed. All delivery dates affected by an event of force majeure shall be tolled for the duration of such event of force majeure and rescheduled for mutually agreed dates as soon as practicable after the event of force majeure ceases to exist. The right to allocate capacity is in the Seller's sole discretion. An event of force majeure shall not include financial distress, insolvency, bankruptcy, or other similar conditions affecting one of the parties, affiliates and/or subcontractors. An event of force majeure in the meaning of these Terms means any circumstances beyond Seller'scontrol that permanently or temporarily hinders performance, even where that circumstance was already foreseen. Buyer shall not be entitled to cancel any orders following its claim of an event of force majeure.

17. Waiver and Severability. Failure to enforce any provision of these Terms will not invalidate that provision; nor will any such failure prejudice either party's right to enforce that provision in the future. Invalidation of any provision of these Terms shall not invalidate any other provision herein and, the remaining provisions will remain in full force and effect.

18. Duration. Unless otherwise stated in the Quote, any agreement governed by or arising from these Terms shall: (a) be for an initial duration of one (1) year; and (b) shall automatically renew for successive one-year terms unless terminated by Buyer with at least 180-days written notice to Seller or if Seller terminates the agreement pursuant to Section 19 of these Terms.

19. Termination. Seller may, without liability to Buyer, terminate any agreement governed by or arising from these Terms for any reason and at anytime by giving Buyer thirty (30) days prior written notice. Seller may immediately terminate, in writing, if Buyer: (a) breaches any provision of these Terms, (b) becomes or is deemed insolvent, (c) appoints or has appointed a trustee, receiver or custodian for all or any part of Buyer's property,(d) files a petition for relief in bankruptcy on its own behalf, or one is filed againstBuyer by a third party, (e) makes an assignment for the benefit of creditors; or (f) dissolves its business or liquidates all or a majority of its assets.

20. Ownership of Rights. Buyer agrees that (a) Seller (and/or its affiliates) owns or is the valid licensee of Seller's IP and (b) the furnishing of information, related documents or other materials by Seller to Buyer does not grant or transfer any ownership interest or license in or to Seller's IP to Buyer, unless expressly agreed in writing. Without limiting the foregoing, Seller retains ownership of all Software supplied to Buyer. In no event shall Buyer obtain any greater right in and to the Software than a right in a license limited to the use thereof and subject to compliance with any other terms provided with the Software. Buyer further agrees that it will not, directly or through intermediaries, reverse engineer, decompile, or disassemble any Software (including firmware) comprising or contained within a Product, except and only to the extent that such activity may be expressly permitted, either by applicable law or, in the case of open source software, the applicable open source license.

21. Indemnity for Infringement of Intellectual Property Rights. Seller is not liable for infringement of any Intellectual Property Rights except as provided in this Section. Seller will defend at its expense and will pay the cost of any settlement or damages awarded in an action brought against Buyer based on a third-party claim that one or more of the Products infringes the Intellectual Property Rights of a third party in the country of delivery of the Products by Seller to Buyer. Seller's obligation to defend and indemnify Buyer is contingent on Buyer notifying Seller within ten (10) days after Buyer becomes aware of any such claim, and Seller having sole control over the defense of the claim including all negotiations for settlement or compromise. If one or more Products is subject to such a claim, Seller may, at its sole expense and option, procure for Buyer the right to continue using the Products, replace or modify the Products to render them non-infringing, or offer to accept return of the Products and refund the purchase price less a reasonable allowance for depreciation. Seller has no obligation or liability for any claim of infringement: (i) arising from information provided by Buyer (including Seller's use of Buyer's Property); or (ii) directed to any Products for which the designs are specified in whole or part by Buyer; or (iii) resulting from the modification, combination or use in a system of any Products. The foregoing provisions of this Section constitute Seller's sole and exclusive liability and Buyer's sole and exclusive remedy for claims of infringement of Intellectual Property Rights.

22. Governing Law. These Terms, the terms of any Quote, and the sale and delivery of all Products are deemed to have taken place in, and shall be governed and construed in accordance with, the laws of the State of Ohio, as applicable to contracts executed and wholly performed therein and without regard to conflicts of laws principles. Buyer irrevocably agrees and consents to the exclusive jurisdiction and venue of the courts of Cuyahoga County, Ohio with respect to any dispute, controversy or claim arising out of or relating to the sale and delivery of the Products.

23. Entire Agreement. These Terms, along with the terms set forth in the Quote, forms the entire agreement between the Buyer and Seller and constitutes the final, complete and exclusive expression of the terms of sale and purchase. In the event of a conflict between any term set forth in the Quote and these Terms, the terms set forth in the Quote shall prevail. All prior or contemporaneous written or oral agreements or negotiations with respect to the subject matter shall have no effect. No modification to these Terms will be binding on Seller unless agreed to in a writing that is signed by an authorized representative of Seller, excluding email correspondence, 'clickwrap' or other purported electronic assent to different or additional terms. Sections 2-25 of these Terms shall survive termination or cancellation of any agreement governed by or arising from these Terms.

24. No 'Wrap' Agreements/No Authority to Bind. Seller's clicking any buttons or any similar action, such as clicking "I Agree" or "Confirm," to utilize Buyer's software or webpage for the placement of orders, is NOT an agreement to Buyer's Terms and Conditions. NO EMPLOYEE, AGENT OR REPRESENTATIVE OF SELLER HAS THE AUTHORITY TO BIND SELLER BY THE ACT OF CLICKING ANY BUTTON OR SIMILAR ACTION ON BUYER'S WEBSITE OR PORTAL.

25. Compliance with Laws. Buyer agrees to comply with all applicable laws, regulations, and industry and professional standards, including those of the United States of America, and the country or countries in which Buyer may operate, including without limitation the U.S. Foreign Corrupt Practices Act ("FCPA"), the U.S. Anti-Kickback Act ("Anti-Kickback Act"), U.S. and E.U. export control and sanctions laws ("Export Laws"), the U.S. Food Drug and Cosmetic Act ("FDCA"), and the rules and regulations promulgated by the U.S. Food and Drug Administration ("FDA"), each as currently amended. Buyeragrees to indemnify, defend, and hold harmless Seller from the consequences of any violation of such laws, regulations and standards by Buyer, its employees or agents. Buyer represents that it is familiar with all applicableprovisions of the FCPA, the Anti-Kickback Act, Export Laws, the FDCA and the FDA and certifies that Buyer will adhere to the requirements thereof and not take any action that would make Seller violate such requirements. Buyer represents and agrees that Buyer will not make any payment or give anything of value, directly or indirectly, to any governmental official, foreign political party or official thereof, candidate for foreign political office, or commercial entity or person, for any improper purpose, including the purpose of influencing such person to purchase Products or otherwise benefit the business of Seller. Buyer further represents and agrees that it will not receive, use, service, transfer or ship any Products from Seller in a manner or for a purpose that violates Export Laws or would cause Seller to be in violation of Export Laws. Buyer agrees to promptly and reliably provide Seller all requested information or documents, including end-user statements and other written assurances, concerning Buyer's ongoing compliance with Export Law.

09/2022

NOTES:

NOTES:

NOTES:

Authorized Distributor
MONILEK OILFIELD

E: sales@monilek.com
W: www.monilekgroup.com

If you have questions about the products contained in this catalog, or their applications, please contact:

Instrumentation Products Division
1005 A Cleaner Way
Huntsville, AL 35805
Ph: **+1 (256) 881-2040**
parker.com/ipd
autoclave.com

Extra care is taken in the preparation of this literature, but Parker is not responsible for any inadvertent typographical errors or omissions. Information in this catalog is only accurate as of the date of publication. All dimensions for reference only and subject to change. For the most current version, please consult the division web site at parker.com/ipd.

WARNING

The products described in this catalog can expose you to chemicals, including Lead, which is known to the State of California to cause cancer and birth defects or other reproductive harm. For more information go to www.p65warnings.ca.gov.

MPI™ Series: Medium Pressure Compression
Catalog 4234-MA

MPI™ Series: Preset Instructional Manual
Go to **Instructional Manual 4234-B1**

Parker Instrumentation Products Division
Download **Product Literature Hub**

Affiliated Resources: CAD, Literature, Videos and more
Go to Resources

Authorized Distributor
MONILEK OILFIELD

MONILEK OILFIELD

E: sales@monilek.com
W: www.monilekgroup.com

Parker Hannifin Corporation
Instrumentation Products Division
1005 A Cleaner Way
Huntsville, AL 35805 USA
phone 256 881 2040
fax 256 881 5083

parker.com/ipd

MPI™ Series Medium Pressure Compression
Catalog 4234-MA November 2025

© 2025 Parker Hannifin Corporation