Authorized Distributor
MONILEK OILFIELD

E: sales@monilek.com
W: www.monilekgroup.com

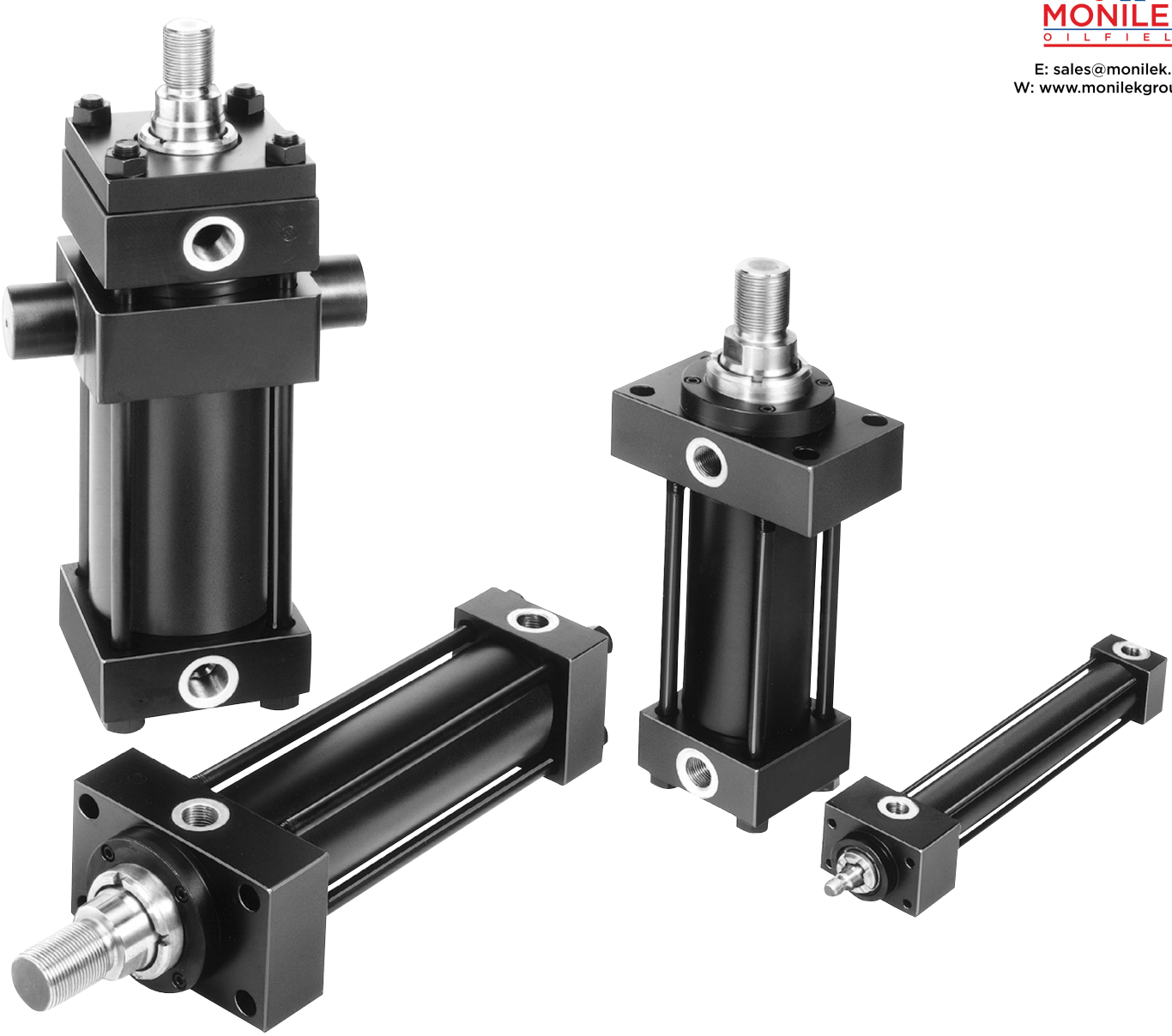

Metric Hydraulic Cylinders

Series HMI

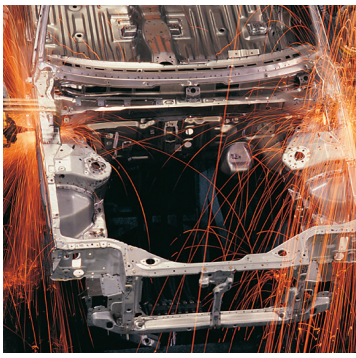

Parker

Schrader Bellows®

ENGINEERING YOUR SUCCESS.

Series HMI Metric Hydraulic Cylinders

As the world leader in the design and manufacture of tie-rod cylinders, Hydraulic Actuator Division introduces the Series HMI metric hydraulic cylinder. HMI Series cylinders are designed to meet the requirements of ISO 6020/2 (1991), for working pressures up to 210 Bar.

HMI Series cylinders are the true world standard, available all over the globe from worldwide manufacturing facilities. Whether you or your machine are in Europe, Asia, South America, Canada, Mexico, or the United States, you can rely on the engineering expertise, manufacturing experience, and commitment to quality that you've come to expect from the Hydraulic Actuator Division.

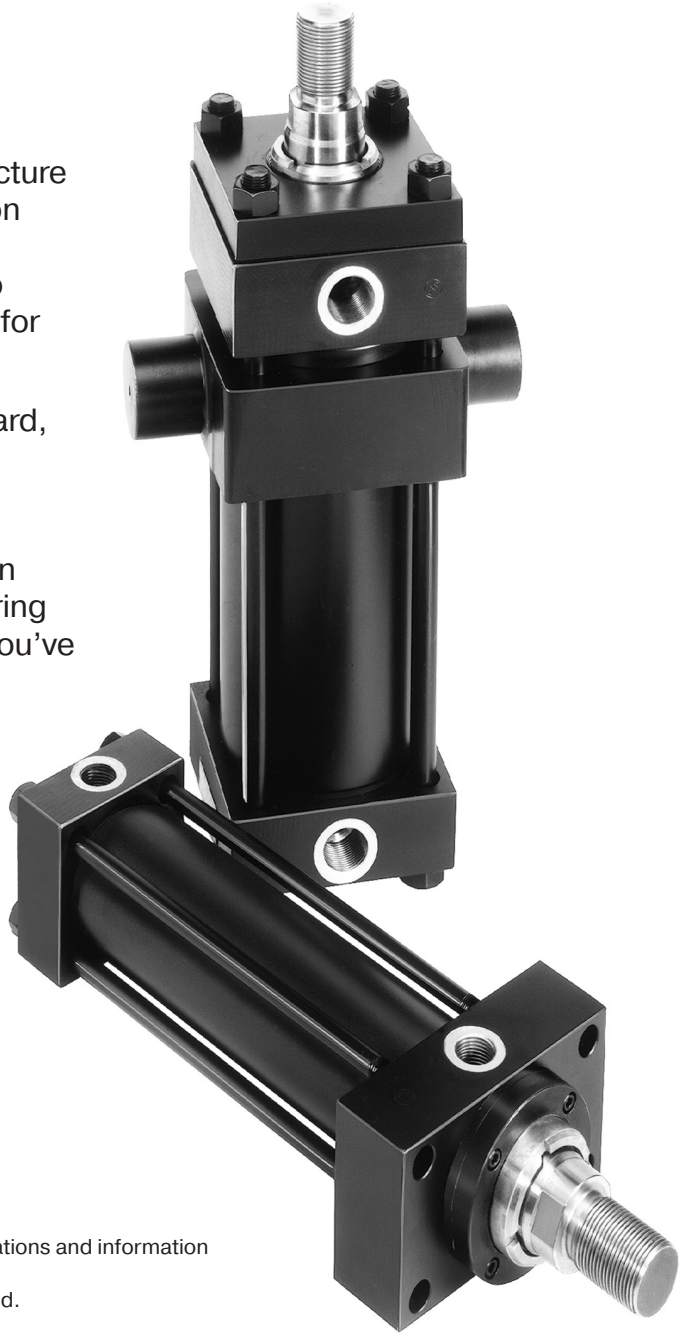

In line with our policy of continuing product improvement, specifications and information contained in this catalog are subject to change.

Copyright ©2026 by Parker Hannifin Corporation. All rights reserved.

PRINTED IN THE U.S.A.

⚠ WARNING

FAILURE OR IMPROPER SELECTION OR IMPROPER USE OF THE PRODUCTS AND/OR SYSTEMS DESCRIBED HEREIN OR RELATED ITEMS CAN CAUSE DEATH, PERSONAL INJURY AND PROPERTY DAMAGE.

This document and other information from the Parker Hannifin Corporation, its subsidiaries and authorized distributors provide product and/or system options for further investigation by users having expertise. It is important that you analyze all aspects of your application, including consequences of any failure and review the information concerning the product or system in the current product catalog. Due to the variety of operating conditions and applications for these products or systems, the user, through its own analysis and testing, is solely responsible for making the final selection of the products and systems and assuring that all performance, safety and warning requirements of the application are met.

The products described herein, including without limitation, product features, specifications, designs, availability and pricing, are subject to change by Parker Hannifin Corporation and its subsidiaries at any time without notice.

Offer of Sale

The items described in this document are hereby offered for sale by Parker Hannifin Corporation, its subsidiaries or its authorized distributors. This offer and its acceptance are governed by provisions stated on a separate page of the document entitled 'Offer of Sale'.

⚠ PROP 65 WARNING **WARNING:** This product can expose you to chemicals including Lead and Lead Compounds which are known to the State of California to cause cancer and birth defects or other reproductive harm. For more information go to www.P65Warnings.ca.gov

Table of Contents

Features, Specifications and Mountings 1
Design Features and Benefits 2-3
Mounting Styles and Applications 4
Piston Rod End Data and Threads 5
Dimensional Data 6-9
Double Rod Cylinders 10
Accessories 11-13
Model Numbers 14-16
Parts Identification 17
Seal Kits and Replacement Parts 18
Mounting Information 19-20
Theoretical Push and Pull Forces 21
Piston Rod Sizes & Stop Tubes 22
Stroke Factors 23
Cushioning 24-26
Pressure Limitations 26
Ports, Locations and Piston Speeds 27
Ports / Weights 28
Seals and Fluids 29
Optional Features 29-30
Cylinder Safety Guide 31-32
Offer of Sale 33

Series HMI Standard Features and Specifications

- ISO 6020/2 mounting interchangeable
- 12 standard mounting styles
- Up to 3 rod sizes per bore
- Wide range of mounting accessories
- Up to 3 male and 3 female rod end threads per bore
- Bore sizes – 25mm to 200mm
- Strokes – available in any practical stroke length
- Working pressure up to 210 bar
- Piston rods – 12mm to 140mm
- Single and Double rod designs
- Cushions available at either end
- Temperature Range – -20°C to 150°C depending on seal type
- Seal types to suit a wide variety of operating environments

In line with our policy of continuing product improvement, specifications in this catalog are subject to change.

Available Mountings and Where To Find Them

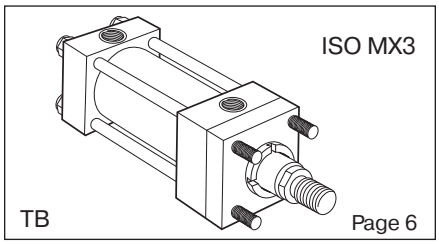

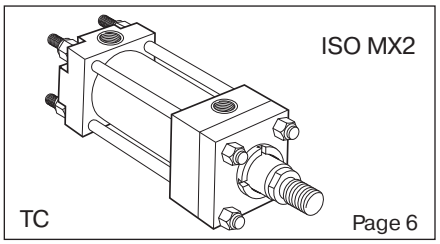

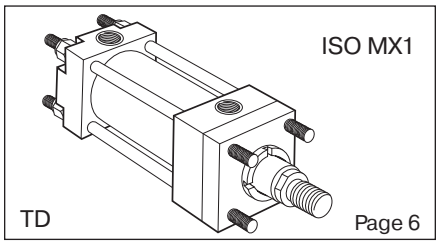

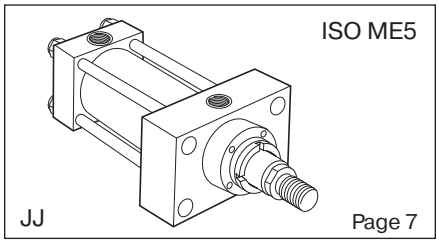

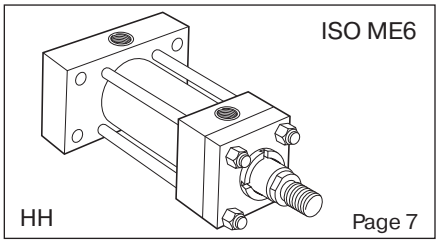

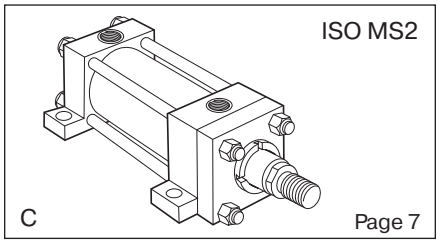

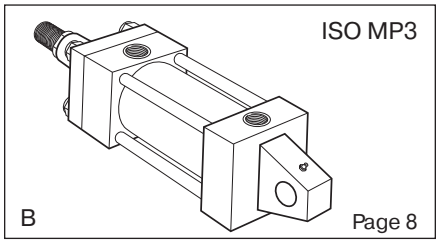

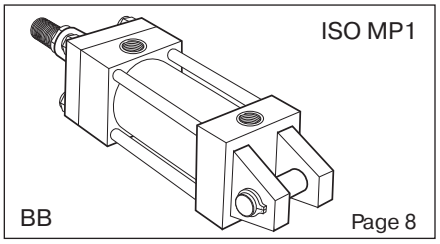

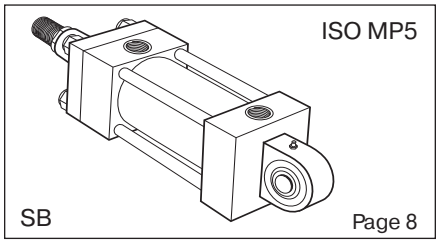

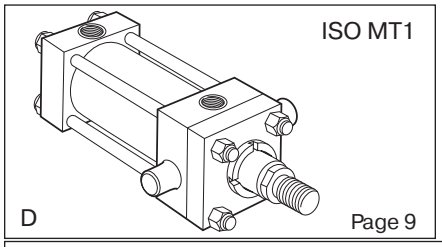

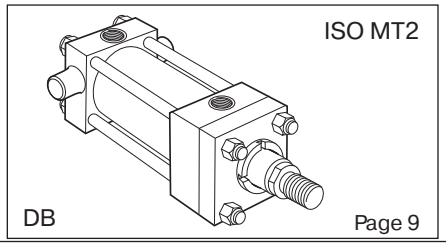

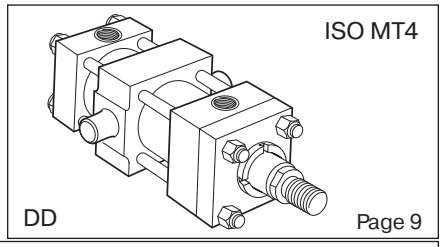

⚠ PROP 65 WARNING **WARNING:** This product can expose you to chemicals including Lead and Lead Compounds which are known to the State of California to cause cancer and birth defects or other reproductive harm. For more information go to www.P65Warnings.ca.gov

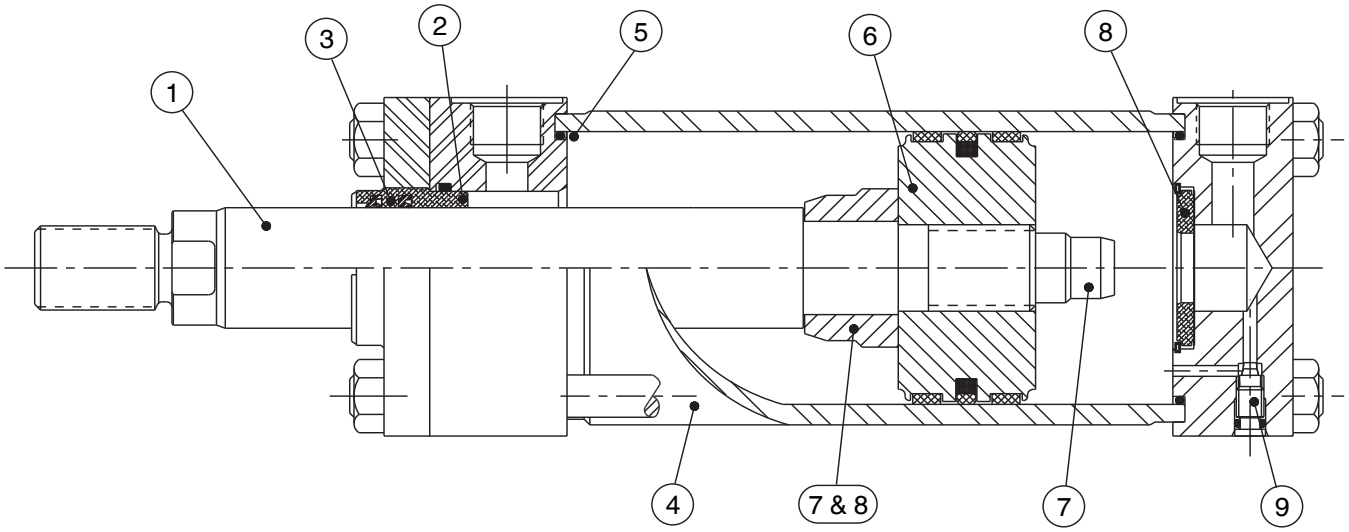

1 Piston Rod

Gland seal life is maximized by manufacturing piston rods from precision ground, high tensile carbon alloy steel, hard chrome plated and polished to 0.2µm max.

2 'Jewel' Gland

Continuous lubrication, and therefore longer gland life, are provided by the long bearing surface inboard of the primary seal. The Jewel gland, complete with rod seals, can easily

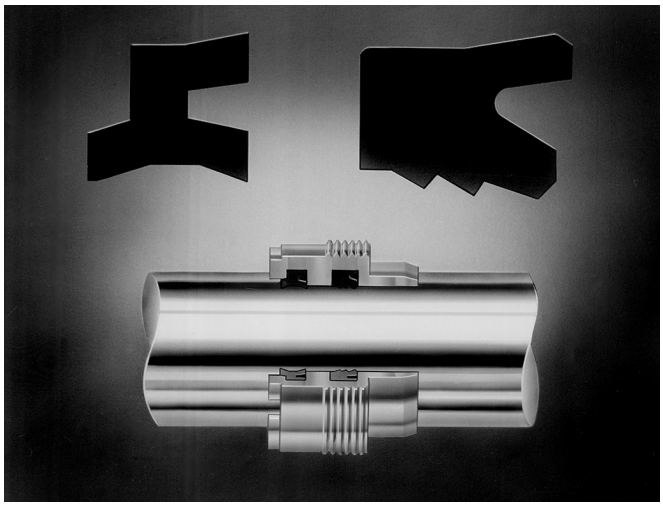

be removed without dismantling the cylinder, so servicing is quicker – and therefore more economical.

3 Rod Seals

The TS-2000 primary seal has a series of sealing edges which take over successively as pressure increases, providing efficient sealing under all operating conditions. On the return stroke the serrations act as a check valve, allowing the oil adhering to the rod to pass back into the cylinder.

The double lip wiperseal acts as a secondary seal, trapping excess lubricating film in the chamber between the wiper and lip seals. Its outer lip prevents the ingress of dirt into the cylinder, extending the life of gland and seals.

The TS-2000 is manufactured from an enhanced polyurethane, giving efficient retention of pressurized fluid and long service life.

4 Cylinder Body

Strict quality control standards and precision manufacture ensure that all tubes meet rigid standards of straightness, roundness and surface finish. The steel tubing is surface finished to minimize internal friction and prolong seal life.

5 Cylinder Body Seals

To make sure that the cylinder body remains leaktight, even under pressure shock conditions,Hydraulic Actuator Division utilizes pressure-energized body seals.

6 One-Piece Piston

Side loading is resisted by the wide bearing surfaces of the pistons. A long thread engagement secures the piston to the piston rod and, as an added safety feature, pistons are secured by an anaerobic adhesive.

7 Cushioning

Progressive deceleration is available by using profiled cushions at the head and cap – see pages 23-25 for details. The head end cushion is self aligning, while the polished cap end spear is an integral part of the piston rod.

8 Floating Cushion Bushings and Sleeves

Closer tolerances – and therefore more effective cushioning – are permitted by the use of a floating cushion sleeve at the head end of the cylinder, and a floating cushion bushing at the cap end. A slotted cushion sleeve at the head end and the floating bronze cushion bushing in the cap, provide minimum fluid restriction at the start of the return stroke. This allows full pressure to be applied over the entire area of the piston, providing full power and fast cycle times.

⚠ **PROP 65 WARNING** **WARNING:** This product can expose you to chemicals including Lead and Lead Compounds which are known to the State of California to cause cancer and birth defects or other reproductive harm. For more information go to www.P65Warnings.ca.gov

9 Cushion Adjustment

Needle valves are provided at both ends of the cylinder for precise cushion adjustment. 63 mm bores and smaller contain cartridge cushion assembly shown below.

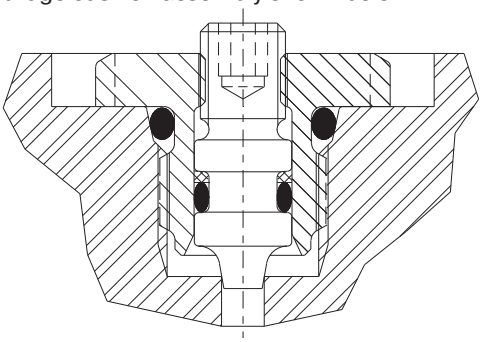

Air Bleeds

Available as an option at both ends, the air bleeds are recessed into the head and cap.

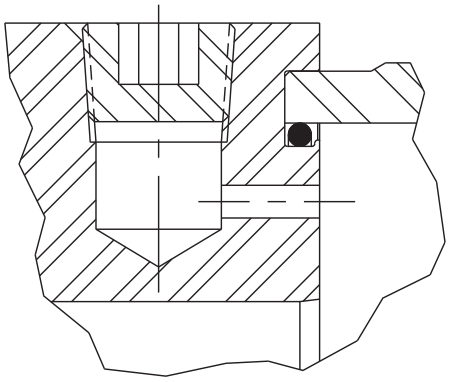

Gland Drains

The accumulation of fluid behind the gland wiperseal of long stroke cylinders, or cylinders with constant back pressure, can be relieved by specifying the option of a gland drain. A port between the wiperseal and primary seal allows fluid to be piped back to a reservoir. By fitting a transparent tube between the port and the reservoir, fluid loss from concealed or inaccessible cylinders can be monitored to provide an early indication of the need for gland servicing. Gland drains are described in greater detail on page 29.

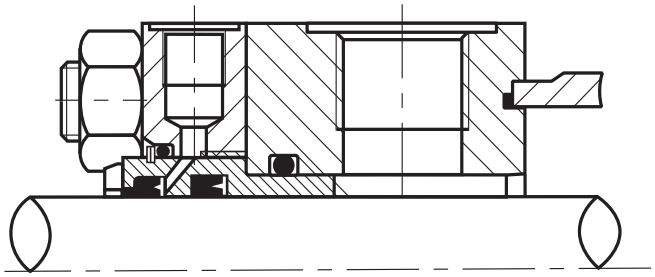

Piston Seals

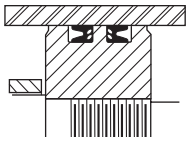

Standard on 25mm, 32mm and 40mm bore sizes, Lipseal™ Piston provides zero leakage under static conditions for hydraulic pressures up to 3000 psi. Seals are self-compensating to conform to variations in pressure, mechanical deflection, and wear. Back-up washers prevent extrusion.

Standard on 50mm bore sizes and larger, B style piston is a single seal design which incorporates two wear strips. This design provides smooth operation, long bearing life, and high load carrying capacity.

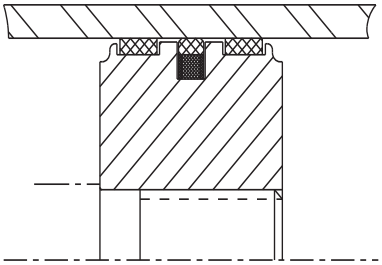

Mixed Media Piston Seals

For applications requiring different media on either side of the piston specify Mixed Media Piston Seals with a W piston code. This option is ideal when hydraulic oil is on one side of the piston and air on the opposite side; and it can be equally effective when dissimilar fluids are on either side of the piston. Superior low-friction bi-directional sealing is accomplished by combining an energized filled PTFE seal with a redundant elastomer seal.

Servo Cylinders

Servo cylinders permit fine control of acceleration, velocity and position in applications where very low friction and an absence of stick-slip are required. They may be used in conjunction with integral or external transducers. Servo cylinders combine low friction piston and gland seals with specially selected tubes and rods. For low-friction applications – consult factory.

Seal Classes

To accommodate the many types of fluids and the varying temperature ranges used in industry, Cylinder Divison offers a range of rod gland, piston and body seals. These are described in detail on page 28.

⚠ **PROP 65 WARNING** **WARNING:** This product can expose you to chemicals including Lead and Lead Compounds which are known to the State of California to cause cancer and birth defects or other reproductive harm. For more information go to www.P65Warnings.ca.gov

ISO Cylinder Mounting Styles

The standard range of Series HMI cylinders comprises 12 ISO mounting styles, to suit the majority of applications. General guidance for the selection of ISO cylinders is given below, with dimensional information about each mounting style shown on the following pages. Application-specific mounting information is shown in the mounting information section on page 18.

Extended Tie Rods

Cylinders with TB, TC and TD mountings are suitable for straight line force transfer applications, and are particularly useful where space is limited. For compression (push) applications, cap end tie rod mountings are most appropriate; where the major load places the piston rod in tension (pull applications), head end mounting styles should be specified. Cylinders with tie rods extended at both ends may be attached to the machine member from either end, allowing the free end of the cylinder to support a bracket or switch.

Flange Mounted Cylinders

These cylinders are also suitable for use on straight line force transfer applications. Two flange mounting styles are available, offering either a head flange (JJ) or a cap flange (HH). Selection of the correct flange mounting style depends on whether the major force applied to the load will result in compression (push) or tension (pull) stresses on the piston rod. For compression-type applications, the cap mounting style is most appropriate; where the major load places the piston rod in
tension, a head mounting should be specified.

Foot Mounted Cylinders

Style C, foot mounted cylinders do not absorb forces on their centerline. As a result, the application of force by the cylinder produces a moment which attempts to rotate the cylinder about its mounting bolts. It is important, therefore, that the cylinder should be firmly secured to the mounting surface and that the load should be effectively guided to avoid side loads being applied to rod gland and piston bearings. A thrust key modification may be specified to provide positive cylinder location.

Pivot Mountings

Cylinders with pivot mountings, which absorb forces on their centerlines, should be used where the machine member to be moved travels in a curved path. Pivot mountings may be used for tension (pull) or compression (push) applications. Cylinders using a fixed clevis, styles BB and B, may be used if the curved path of the piston rod travel is in a single plane; for applications where the piston rod will travel in a path on either side of the true plane of motion, a spherical bearing mounting SB is recommended.

Trunnion Mounted Cylinders

These cylinders, styles D, DB and DD, are designed to absorb force on their centerlines. They are suitable for tension (pull) or compression (push) applications, and may be used where the machine member to be moved travels in a curved path in a single plane. Trunnion pins are designed for shear loads only and should be subjected to minimum bending stresses.

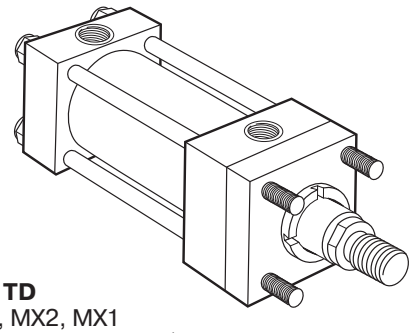

Styles TB, TC, TD
ISO Styles MX3, MX2, MX1 **TB**

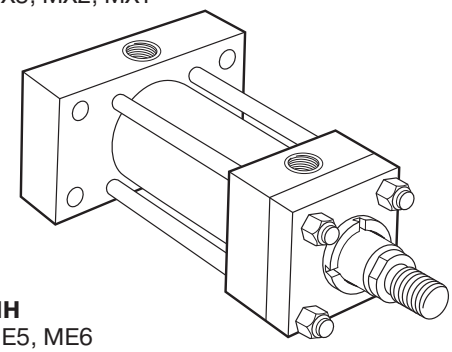

Styles JJ, HH
ISO Styles ME5, ME6 **HH**

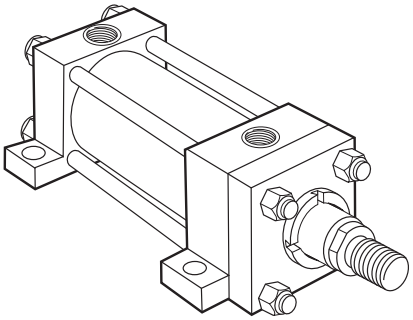

Style C
ISO Style MS2 **C**

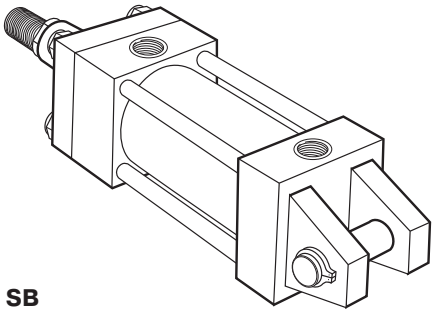

Styles B, BB, SB
ISO Styles MP3, MP1, MP5 **BB**

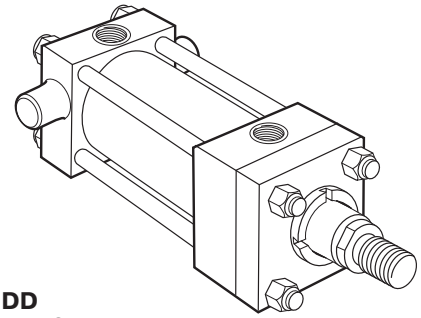

Styles D, DB, DD
ISO Styles MT1, MT2, MT4 **DB**

⚠ PROP 65 WARNING **WARNING:** This product can expose you to chemicals including Lead and Lead Compounds which are known to the State of California to cause cancer and birth defects or other reproductive harm. For more information go to www.P65Warnings.ca.gov

Piston Rod End Data and Threads

Series HMI

Thread Styles 4 & 7 – All Except JJ Mount

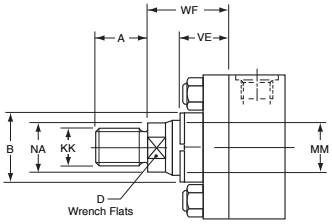

Thread Styles 4 & 7 – JJ Mount

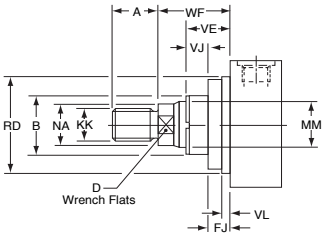

Thread Style 9 – All Except JJ Mount

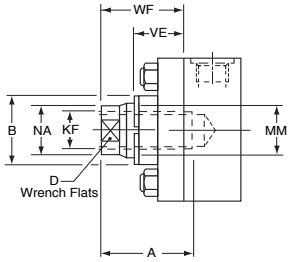

Thread Style 9 – JJ Mount

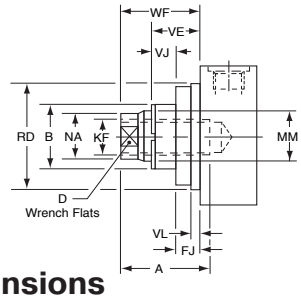

Thread Styles 4 & 7

The smallest diameter rod end thread for each bore size is designated Style 4 when supplied with a No.1 rod. When the same rod end thread is supplied with a No. 2 or No. 3 rod, it is designated Style 7.

Thread Style 9 – Short Stroke Cylinders

Style 9 (female) rod ends should not be used on 160mm or 200mm bore cylinders with a stroke of 50mm or less. Please consult the factory, with details of the application.

Thread Style 3

Non-standard piston rod ends aredesignated 'Style 3'. A dimensional sketch or description should accompany the order. Please specify dimensions KK or KF, A, rod stand out WF and thread type.

25 & 32mm Bore Cylinders

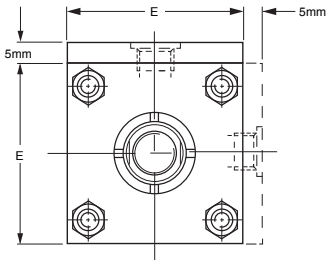

5mm extra height applies to port face at head end only.

Gland Retainer – 160 and 200mm Bore

On all 160mm and 200mm bore ISO mounting styles except TB and TD, the gland retainer is separately bolted to the head, as shown.

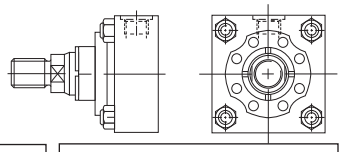

Piston Rod End Dimensions

Bore Ø	Rod No.	MM Rod Ø	Style 4 KK	Style 4 A	Style 7 KK	Style 7 A	Style 9 KF	Style 9 A	B f9	D	NA	VE	WF	JJ Mount Only VL min	JJ Mount Only RD f8	JJ Mount Only VJ	JJ Mount Only FJ
25	1	12	M10x1.25	14	-	-	M8x1	14	24	10	11	16	25	3	38	6	10
	2	18	M14x1.5	18	M10x1.25	14	M12x1.25	18	30	15	17	16					
32	1	14	M12x1.25	16	-	-	M10x1.25	16	26	12	13	22	35	3	42	12	10
	2	22	M16x1.5	22	M12x1.25	16	M16x1.5	22	34	18	21	22					
40	1	18	M14x1.5	18	-	-	M12x1.25	18	30	15	17	16	35	3	62	6	10
	2	28	M20x1.5	28	M14x1.5	18	M20x1.5	28	42	22	26	22				12	
50	1	22	M16x1.5	22	-	-	M16x1.5	22	34	18	21	22	41	4	74	6	16
	2	36	M27x2	36	M16x1.5	22	M27x2	36	50	30	34	25				9	
	3	28	M20x1.5	28	M16x1.5	22	M20x1.5	28	42	22	26	22				6	
63	1	28	M20x1.5	28	-	-	M20x1.5	28	42	22	26	22	48	4	75	6	16
	2	45	M33x2	45	M20x1.5	28	M33x2	45	60	39	43	29			88	13	
	3	36	M27x2	36	M20x1.5	28	M27x2	36	50	30	34	25				9	
80	1	36	M27x2	36	-	-	M27x2	36	50	30	34	25	51	4	82	5	20
	2	56	M42x2	56	M27x2	36	M42x2	56	72	48	54	29			105	9	
	3	45	M33x2	45	M27x2	36	M33x2	45	60	39	43	29					
100	1	45	M33x2	45	-	-	M33x2	45	60	39	43	29	57[1]	5	92	7	22
	2	70	M48x2	63	M33x2	45	M48x2	63	88	62	68	32			125	10	
	3	56	M42x2	56	M33x2	45	M42x2	56	72	48	54	29				7	
125	1	56	M42x2	56	-	-	M42x2	56	72	48	54	29	57[1]	5	105	9	20
	2	90	M64x3	85	M42x2	56	M64x3	85	108	80	88	32			150	10	22
	3	70	M48x2	63	M42x2	56	M48x2	63	88	62	68	32					
160	1	70	M48x2	63	-	-	M48x2	63	88	62	68	32	57[1]	5	125	10	22
	2	110	M80x3	95	M48x2	63	M80x3	95	133	100	108	32			170	7	25
	3	90	M64x3	85	M48x2	63	M64x3	85	108	80	88	32					
200	1	90	M64x3	85	-	-	M64x3	85	108	80	88	32	57[1]	5	150	10	22
	2	140	M100x3	112	M64x3	85	M100x3	112	163	128	138	32			210	7	25
	3	110	M80x3	95	M64x3	85	M80x3	95	133	100	108	32					

All dimensions are in millimeters unless otherwise stated.

[1] Use WD dimension for mounting Style D in 100mm - 200mm bore. See Style D page for details.

⚠ PROP 65 WARNING **WARNING:** This product can expose you to chemicals including Lead and Lead Compounds which are known to the State of California to cause cancer and birth defects or other reproductive harm. For more information go to www.P65Warnings.ca.gov

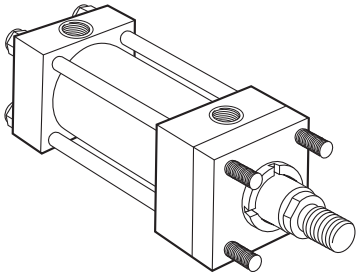

Style TB
Tie Rods Extended Head End
(ISO Style MX3)

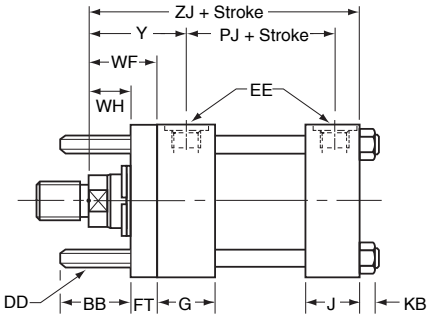

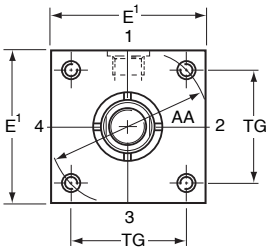

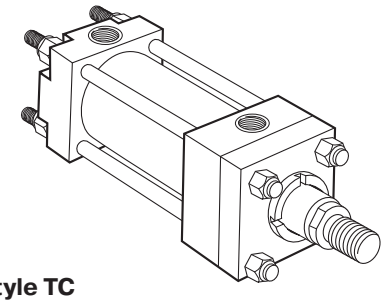

Style TC
Tie Rods Extended Cap End
(ISO Style MX2)

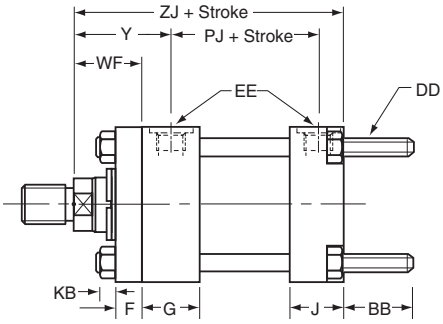

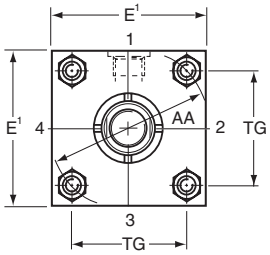

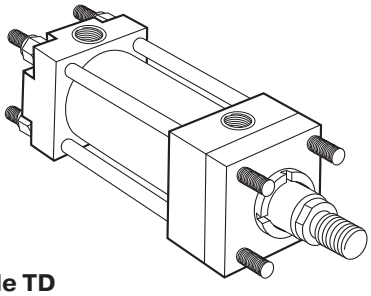

Style TD
Tie Rods Extended Both Ends
(ISO Style MX1)

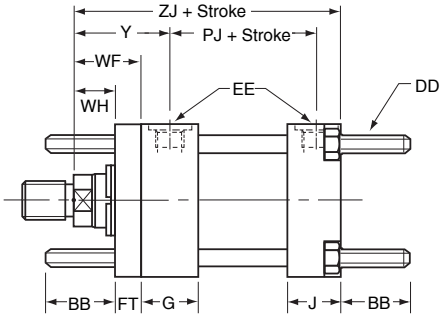

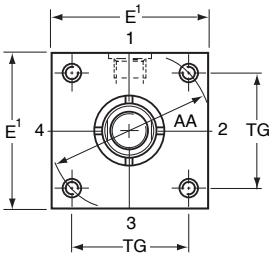

[1]Head depth increased by 5mm to accommodate port on 25mm and 32mm bore cylinders – see page 5

Dimensions – TB, TC & TD

See also Rod End Dimensions, page 5

Bore Ø	AA	BB	DD	E	EE BSP/G inches	F	FT	G	J	KB	TG	WF	WH	Y	+ Stroke PJ	+ Stroke ZJ
25	40	19	M5x0.8	40[1]	1/4	10	10	40	25	4	28.3	25	15	50	53	114
32	47	24	M6x1	45[1]	1/4	10	10	40	25	5	33.2	35	25	60	56	128
40	59	35	M8x1	63	3/8	10	10	45	38	6.5	41.7	35	25	62	73	153
50	74	46	M12x1.25	75	1/2	16	16	45	38	10	52.3	41	25	67	74	159
63	91	46	M12x1.25	90	1/2	16	16	45	38	10	64.3	48	32	71	80	168
80	117	59	M16x1.5	115	3/4	20	20	50	45	13	82.7	51	31	77	93	190
100	137	59	M16x1.5	130	3/4	22	22	50	45	13	96.9	57	35	82	101	203
125	178	81	M22x1.5	165	1	22	22	58	58	18	125.9	57	35	86	117	232
160	219	92	M27x2	205	1	25	25	58	58	22	154.9	57	32	86	130	245
200	269	115	M30x2	245	1-1/4	25	25	76	76	24	190.2	57	32	98	165	299

All dimensions are in millimeters unless otherwise stated.

⚠ PROP 65 WARNING **WARNING:** This product can expose you to chemicals including Lead and Lead Compounds which are known to the State of California to cause cancer and birth defects or other reproductive harm. For more information go to www.P65Warnings.ca.gov

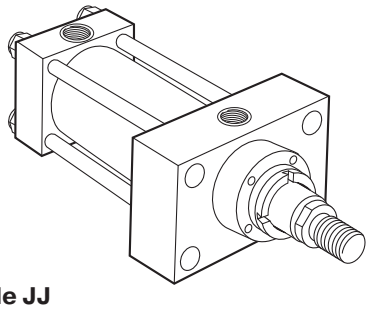

Style JJ
Head Rectangular Flange
(ISO Style ME5)

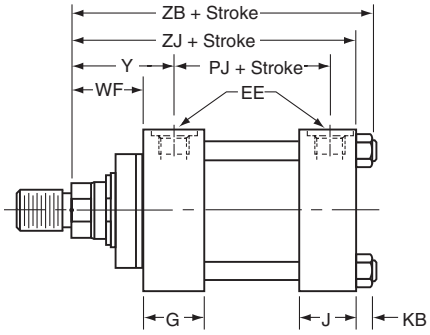

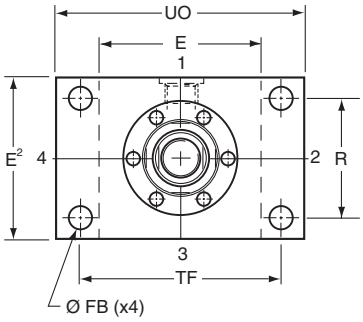

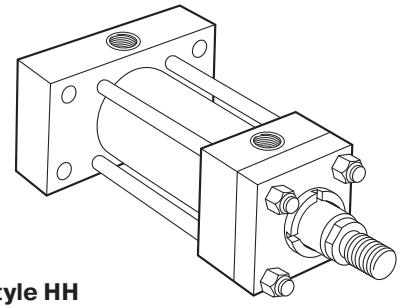

Style HH
Cap Rectangular Flange
(ISO Style ME6)

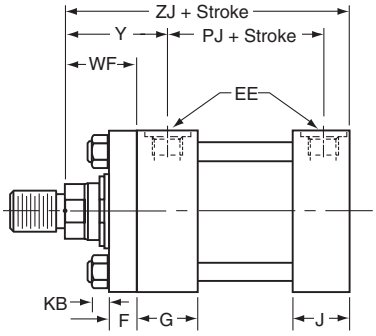

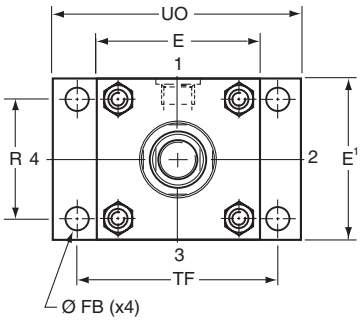

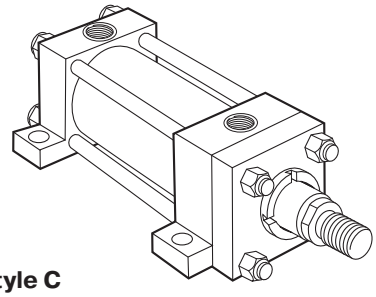

Style C
Side Lugs
(ISO Style MS2)

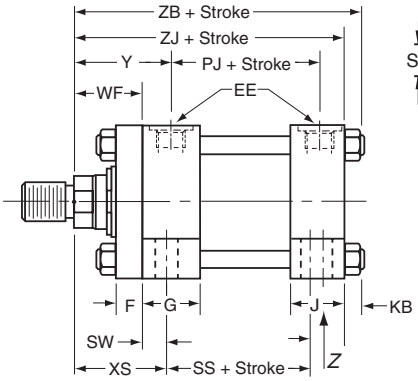

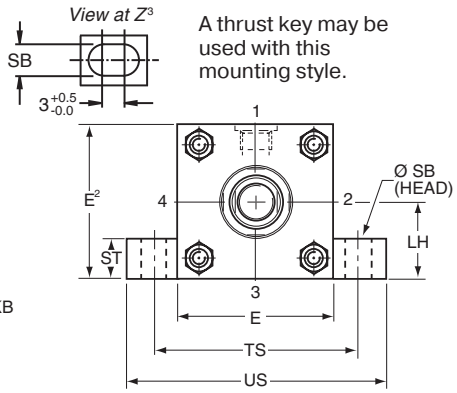

A thrust key may be used with this mounting style.

[1]Head depth increased by 5mm to accommodate port on 25mm and 32mm bore cylinders – see page 5
[2]On 25mm and 32mm bore C mount and JJ mount cylinders with port in position 2 or 4, head depth E is increased by 5mm in position 1.
[3]On 25mm and 32mm bore C mount cylinders both head and cap mounting holes are slotted (also both heads of double rod styles).

Dimensions – JJ, HH & C

See also Rod End Dimensions, page 5

Bore Ø	E	EE BSP/G inches	F	FB	G	J	KB	LH h10	R	SB	ST	SW	TF	TS	UO	US	WF	XS	Y	+ Stroke PJ	+ Stroke SS	+ Stroke ZB	+ Stroke ZJ
25	40[1]	1/4	10	5.5	40	25	4	19	27	6.6	8.5	8	51	54	65	72	25	33	50	53	72	121	114
32	45[1]	1/4	10	6.6	40	25	5	22	33	9	12.5	10	58	63	70	84	35	45	60	56	72	137	128
40	63	3/8	10	11	45	38	6.5	31	41	11	12.5	10	87	83	110	103	35	45	62	73	97	166	153
50	75	1/2	16	14	45	38	10	37	52	14	19	13	105	102	130	127	41	54	67	74	91	176	159
63	90	1/2	16	14	45	38	10	44	65	18	26	17	117	124	145	161	48	65	71	80	85	185	168
80	115	3/4	20	18	50	45	13	57	83	18	26	17	149	149	180	186	51	68	77	93	104	212	190
100	130	3/4	22	18	50	45	13	63	97	26	32	22	162	172	200	216	57	79	82	101	101	225	203
125	165	1	22	22	58	58	18	82	126	26	32	22	208	210	250	254	57	79	86	117	130	260	232
160	205	1	25	26	58	58	22	101	155	33	38	29	253	260	300	318	57	86	86	130	129	279	245
200	245	1-1/4	25	33	76	76	24	122	190	39	44	35	300	311	360	381	57	92	98	165	171	336	299

All dimensions are in millimeters unless otherwise stated.

⚠ PROP 65 WARNING **WARNING:** This product can expose you to chemicals including Lead and Lead Compounds which are known to the State of California to cause cancer and birth defects or other reproductive harm. For more information go to www.P65Warnings.ca.gov

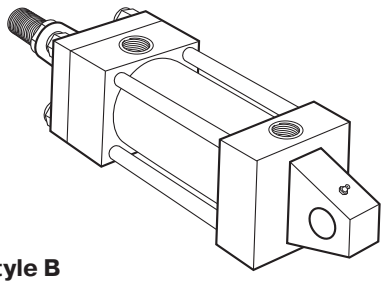

Style B
Cap Fixed Eye
(ISO Style MP3)

Pivot pin not supplied

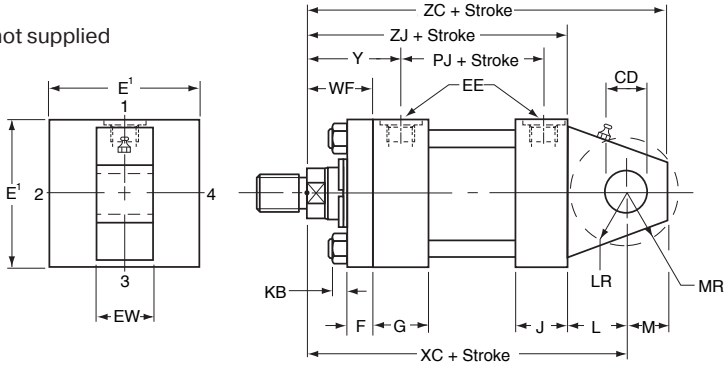

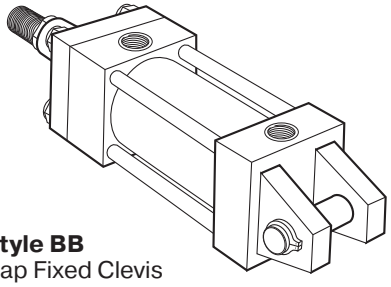

Style BB
Cap Fixed Clevis
(ISO Style MP1)

Supplied complete with pivot pin

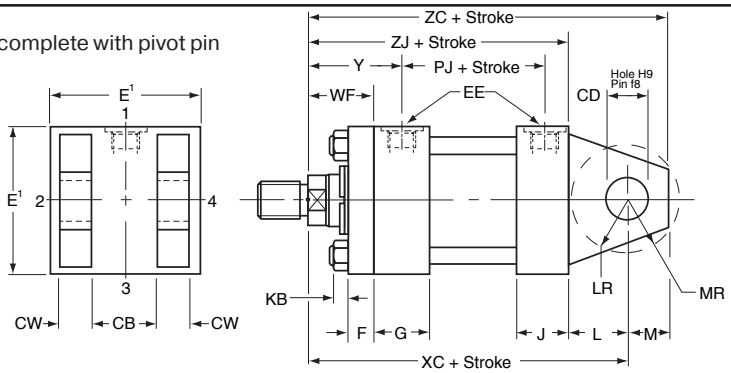

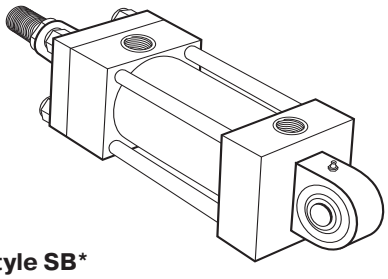

Style SB*
Cap Fixed Eye
(ISO Style MP5)

Pivot pin not supplied. Grease fitting not supplied on bore sizes 25-40mm.

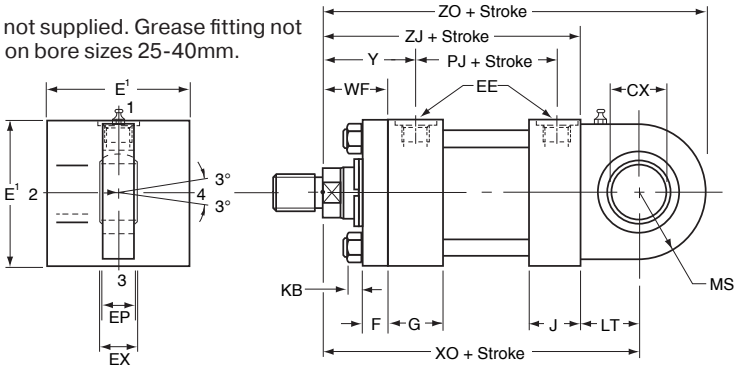

[1]Head depth increased by 5mm to accommodate port on 25mm and 32mm bore cylinders – see page 5
*Style SB is also known as Style SBd under Hydraulic Actuator Division European model code system

Dimensions – B, BB & SB

See also Rod End Dimensions, page 5

Bore Ø	CB A16	CD H9	CW	CX	E	EE BSP/G inches	EP	EW h14	EX	F	G	J	KB	L	LR	LT	M	MR	MS max	WF	Y	+ Stroke PJ	XC	XO	ZC	ZJ	ZO
25	12	10	6	12-0.008	40[1]	1/4	8	12	10	10	40	25	4	13	12	16	10	12	20	25	50	53	127	130	137	114	150
32	16	12	8	16-0.008	45[1]	1/4	11	16	14	10	40	25	5	19	17	20	12	15	22.5	35	60	56	147	148	159	128	170.5
40	20	14	10	20-0.012	63	3/8	13	20	16	10	45	38	6.5	19	17	25	14	16	29	35	62	73	172	178	186	153	207
50	30	20	15	25-0.012	76	1/2	17	30	20	16	45	38	10	32	29	31	20	25	33	41	67	74	191	190	211	159	223
63	30	20	15	30-0.012	90	1/2	19	30	22	16	45	38	10	32	29	38	20	25	40	48	71	80	200	206	220	168	246
80	40	28	20	40-0.012	115	3/4	23	40	28	20	50	45	13	39	34	48	28	34	50	51	77	93	229	238	257	190	288
100	50	36	25	50-0.012	130	3/4	30	50	35	22	50	45	13	54	50	58	36	44	62	57	82	101	257	261	293	203	323
125	60	45	30	60-0.015	165	1	38	60	44	22	58	58	18	57	53	72	45	53	80	57	86	117	289	304	334	232	384
160	70	56	35	80-0.015	205	1	47	70	55	25	58	58	22	63	59	92	59	59	100	57	86	130	308	337	367	245	437
200	80	70	40	100-0.020	245	1-1/4	57	80	70	25	76	76	24	82	78	116	70	76	120	57	98	165	381	415	451	299	535

All dimensions are in millimeters unless otherwise stated.

⚠ PROP 65 WARNING **WARNING:** This product can expose you to chemicals including Lead and Lead Compounds which are known to the State of California to cause cancer and birth defects or other reproductive harm. For more information go to www.P65Warnings.ca.gov

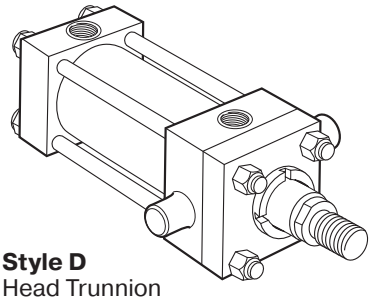

Style D
Head Trunnion
(ISO Style MT1)

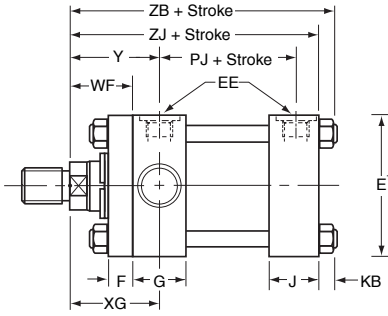

25mm - 80mm Bore
Head / Retainer
Construction and Rod Extension

Notes:
A one-piece head and retainer is used on 100mm-200mm bore sizes – G1 dimension. On 160 and 200mm bores, the bolted gland is recessed, with tie rods screwed into the head.

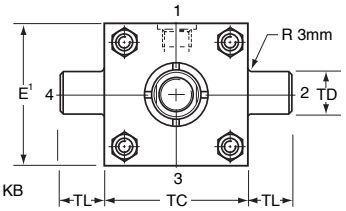

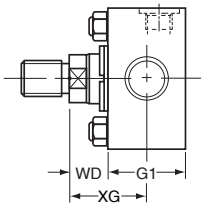

100mm - 200mm Bore
Head Construction
and Rod Extension

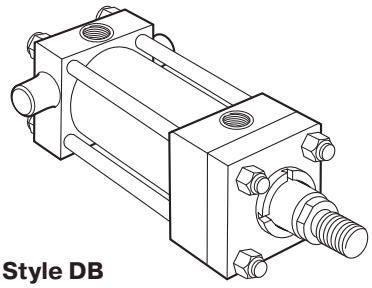

Style DB
Cap Trunnion
(ISO Style MT2)

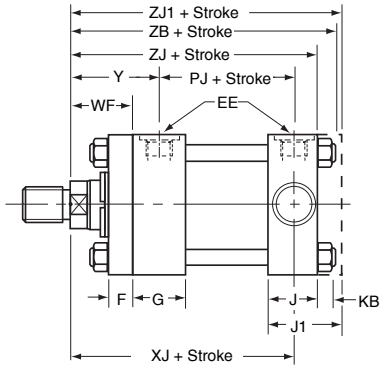

Note:
On 80 – 200mm bore cylinders, dimension J becomes J1. On 80 – 200mm bore cylinders, dimension ZJ1 replaces ZB. Tie rods are screwed directly into the cap on 100 – 200mm bore cylinders.

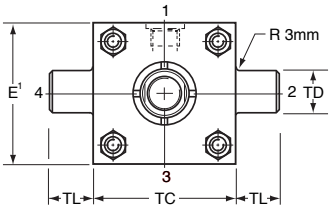

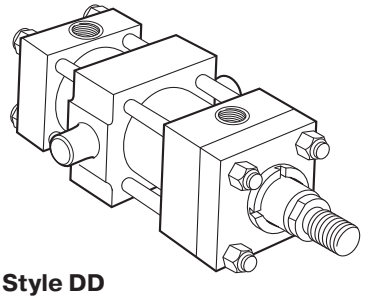

Style DD
Intermediate Fixed Trunnion
(ISO Style MT4)

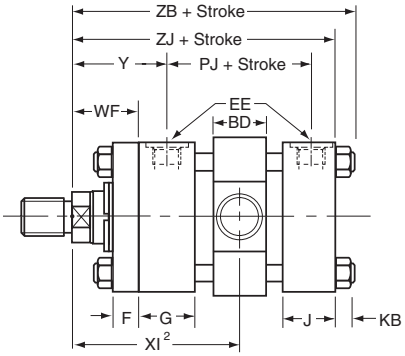

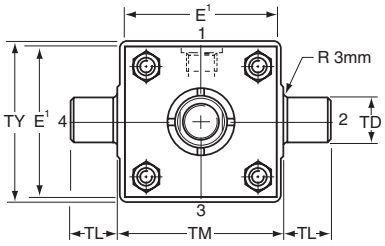

[1]Head depth increased by 5mm to accommodate port on 25mm and 32mm bore cylinders – see page 5
[2]Dimensions to be specified by customer

Dimensions – D, DB & DD

See also Rod End Dimensions, page 5

Bore Ø	BD	E	EE BSP/G inches	F	G	G1	J	J1	KB	TC	TD f8	TL	TM	TY	WD	WF	XG	Y	+ Stroke PJ	+ Stroke XJ	+ Stroke ZJ	+ Stroke ZJ1	+ Stroke ZB	Style DD min stroke	Min XI dim'n
25	20	40[1]	1/4	10	40	-	25	-	4	38	12	10	48	45	-	25	44	50	53	101	114	-	121	10	78
32	25	45[1]	1/4	10	40	-	25	-	5	44	16	12	55	54	-	35	54	60	56	115	128	-	137	10	90
40	30	63	3/8	10	45	-	38	-	6.5	63	20	16	76	76	-	35	57	62	73	134	153	-	166	15	97
50	40	76	1/2	16	45	-	38	-	10	76	25	20	89	89	-	41	64	67	74	140	159	-	176	15	107
63	40	90	1/2	16	45	-	38	-	10	89	32	25	100	95	-	48	70	71	80	149	168	-	185	15	114
80	50	115	3/4	20	50	-	45	50	13	114	40	32	127	127	-	51	76	77	93	168	190	194	212	20	127
100	60	130	3/4	22	50	72	45	58	13	127	50	40	140	140	35	57	71	82	101	187	203	216	225	20	138
125	73	165	1	22	58	80	58	71	18	165	63	50	178	178	35	57	75	86	117	209	232	245	260	25	153
160	90	205	1	25	58	88	58	88	22	203	80	63	215	216	32	57	75	86	130	230	245	275	279	30	161
200	110	245	1-1/4	25	76	108	76	108	24	241	100	80	279	280	32	57	85	98	165	276	299	330	336	30	190

All dimensions are in millimeters unless otherwise stated.

⚠ PROP 65 WARNING **WARNING:** This product can expose you to chemicals including Lead and Lead Compounds which are known to the State of California to cause cancer and birth defects or other reproductive harm. For more information go to www.P65Warnings.ca.gov

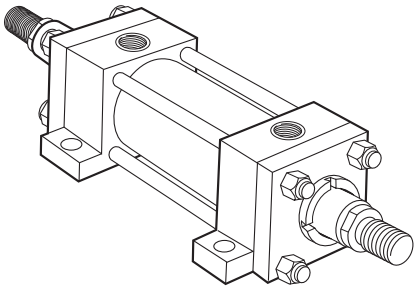

Double Rod Cylinder
Available with Styles TB, TD, JJ, C, D, DD (Style C illustrated)

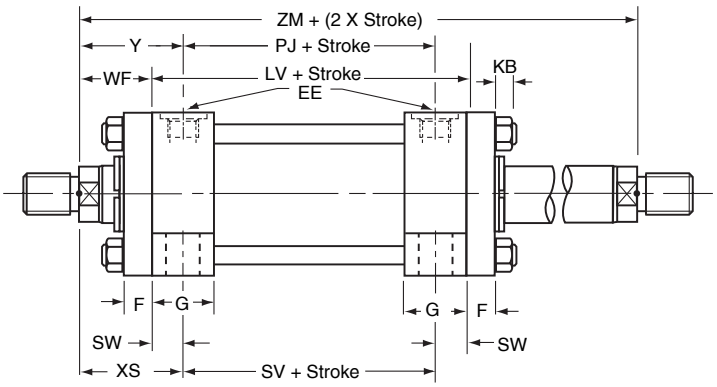

Mounting Styles and Codes

Double rod cylinders are denoted by a 'K' in the ISO cylinder model code.

Dimensions

To obtain dimensional information for double rod cylinders, first select the desired mounting style by referring to the corresponding single rod model. Dimensions for the appropriate single rod model should be supplemented by those from the table opposite to provide a full set of dimensions.

Minimum Stroke Length – Style 9 Rod End

Where a style 9 (female) piston rod end is required on a double rod cylinder with a stroke of 80mm or less, and a bore of 80mm or above, please consult the factory.

Bore	Rod		Add Stroke			Add 2x Stroke
Ø	No.	MM Ø	LV	PJ	SV	ZM
25	1	12	104	53	88	154
	2	18				
32	1	14	108	56	88	178
	2	22				
40	1	18	125	73	105	195
	2	28				
50	1	22	125	74	99	207
	2	36				
	3	28				
63	1	28	127	80	93	223
	2	45				
	3	36				
80	1	36	144	93	110	246
	2	56				
	3	45				
100	1	45	151	101	107	265
	2	70				
	3	56				
125	1	56	175	117	131	289
	2	90				
	3	70				
160	1	70	188	130	130	302
	2	110				
	3	90				
200	1	90	242	160	172	356
	2	140				
	3	110				

Double Rod Cylinders

For double rod cylinders, specify rod number and rod end symbols for both piston rods. A typical model number for a double rod cylinder would be:

100	K	JJ	HMI	R	E	1	4	M	1	4	M	125	M	11	44

All dimensions are in millimeters unless otherwise stated.

⚠ PROP 65 WARNING **WARNING:** This product can expose you to chemicals including Lead and Lead Compounds which are known to the State of California to cause cancer and birth defects or other reproductive harm. For more information go to www.P65Warnings.ca.gov

Accessory Selection

Accessories for the rod end of a cylinder are selected by reference to the rod end thread, while the same accessories, when used at the cap end, are selected by cylinder bore size. See tables of part numbers below, and on the following pages.

The rod clevises, plain rod eyes and spherical bearings fitted as accessories to the rod end have the same pin diameters as those used at the cylinder cap ends of the corresponding mounting styles – B, BB and SB – when fitted with the No. 1 rod, or the No. 2 or No. 3 rods with Style 7 rod end.

Rod and Cap End Accessories

Accessories for the HMI ISO cylinder include:

Rod End – rod clevis, eye bracket and pivot pin
– plain rod eye, clevis bracket and pivot pin
– rod eye with spherical bearing

Cap End – eye bracket for style BB mounting
– clevis bracket for style B mounting
– pivot pin for eye bracket and clevis bracket

Rod Clevis, Eye Bracket and Pivot Pin

KK Thread	Rod Clevis	Eye Bracket	Pivot Pin	Nominal Force kN	Weight kg
M10x1.25	1434470000	1448080000	1434770000	8	0.3
M12x1.25	1434480000	1448090000	1434780000	12.5	0.6
M14x1.5	1434490000	1448100000	1434790000	20	0.8
M16x1.5	1434500000	1448110000	1434800000	32	2.2
M20x1.5	1434510000	1448120000	1434800000	50	2.7
M27x2	1434520000	1448130000	1434810000	80	5.9
M33x2	1434530000	1448140000	1434820000	125	9.4
M42x2	1434540000	1448150000	1434830000	200	17.8
M48x2	1434550000	1448160000	1434840000	320	26.8
M64x3	1434560000	1448170000	1434850000	500	39.0

Rod Clevis Dimensions

Part No.	AV	CE	CK Ø H9	CL	CM A16	CR	ER	KK Thread	LE	Weight kg
1434470000	17	32	10	25	12	20	12	M10x1.25	14	0.08
1434480000	16	36	12	32	16	32	17	M12x1.25	19	0.25
1434490000	18	38	14	40	20	30	17	M14x1.5	19	0.32
1434500000	22	54	20	60	30	50	29	M16x1.5	32	1.0
1434510000	28	60	20	60	30	50	29	M20x1.5	32	1.1
1434520000	36	75	28	83	40	61	34	M27x2	39	2.3
1434530000	45	99	36	103	50	76	50	M33x2	54	2.6
1434540000	56	113	45	123	60	102	53	M42x2	57	5.5
1434550000	63	126	56	143	70	112	59	M48x2	63	7.6
1434560000	85	168	70	163	80	146	78	M64x3	83	13.0

Rod Clevis

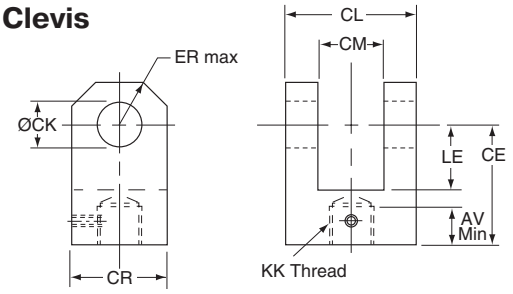

Pivot Pin for Clevis Bracket and Plain Rod Eye – Dimensions

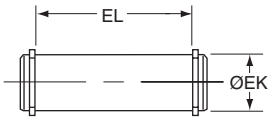

Part No.	EK Ø f8	EL	Weight kg
1434770000	10	29	0.02
1434780000	12	37	0.05
1434790000	14	45	0.08
1434800000	20	66	0.2
1434810000	28	87	0.4
1434820000	36	107	1.0
1434830000	45	129	1.8
1434840000	56	149	4.2
1434850000	70	169	6.0

Eye Bracket – for Cap Clevis Mount

Bore Ø	Eye Bracket	Nominal Force kN	Weight kg
25	1448080000	8	0.2
32	1448090000	12.5	0.3
40	1448100000	20	0.4
50	1448110000	32	1.0
63	1448120000	50	1.4
80	1448130000	80	3.2
100	1448140000	125	5.6
125	1448150000	200	10.5
160	1448160000	320	15.0
200	1448170000	500	20.0

Eye Bracket Dimensions

Part No.	CK Ø H9	EM h13	FL	MR max	LE min	AA Ø	HB Ø	TG	UD
1448080000	10	12	23	12	13	40	5.5	28.3	40
1448090000	12	16	29	17	19	47	6.6	33.2	45
1448100000	14	20	29	17	19	59	9	41.7	65
1448110000	20	30	48	29	32	74	13.5	52.3	75
1448120000	20	30	48	29	32	91	13.5	64.3	90
1448130000	28	40	59	34	39	117	17.5	82.7	115
1448140000	36	50	79	50	54	137	17.5	96.9	130
1448150000	45	60	87	53	57	178	26	125.9	165
1448160000	56	70	103	59	63	219	30	154.9	205
1448170000	70	80	132	78	82	269	33	190.2	240

Eye Bracket

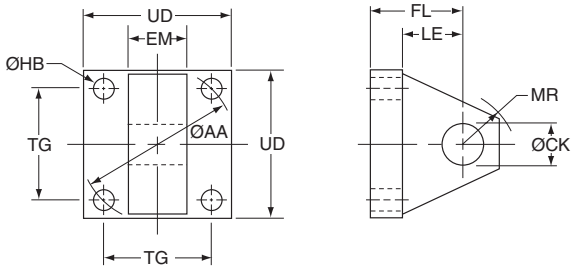

All dimensions are in millimeters unless otherwise stated.

⚠ PROP 65 WARNING **WARNING:** This product can expose you to chemicals including Lead and Lead Compounds which are known to the State of California to cause cancer and birth defects or other reproductive harm. For more information go to www.P65Warnings.ca.gov

Plain Rod Eye, Clevis Bracket and Pivot Pin

KK Thread	Plain Rod Eye	Clevis Bracket	Pivot Pin	Nominal Force kN	Weight kg
M10x1.25	1434570000	1436460000	1434770000	8	0.5
M12x1.25	1434580000	1436470000	1434780000	12.5	1.0
M14x1.5	1434590000	1436480000	1434790000	20	1.3
M16x1.5	1434600000	1436490000	1434800000	32	3.2
M20x1.5	1434610000	1436490000	1434800000	50	3.8
M27x2	1434620000	1436500000	1434810000	80	6.9
M33x2	1434630000	1436510000	1434820000	125	12.5
M42x2	1434640000	1436520000	1434830000	200	26.0
M48x2	1434650000	1436530000	1434840000	320	47.0
M64x3	1434660000	1436540000	1434850000	500	64.0

Plain Rod Eye / Knuckle Dimensions

Part No.	AW	CA	CB	CD	CK Ø H9	EM h13	ER	KK Thread	LE	Weight kg
1434570000	14	32	18	9	10	12	12	M10x1.25	13	0.08
1434580000	16	36	22	11	12	16	17	M12x1.25	19	0.15
1434590000	18	38	20	12.5	14	20	17	M14x1.5	19	0.22
1434600000	22	54	30	17.5	20	30	29	M16x1.5	32	0.5
1434610000	28	60	30	20	20	30	29	M20x1.5	32	1.1
1434620000	36	75	40	25	28	40	34	M27x2	39	1.5
1434630000	45	99	50	35	36	50	50	M33x2	54	2.5
1434640000	56	113	65	50	45	60	53	M42x2	57	4.2
1434650000	63	126	90	56	56	70	59	M48x2	63	11.8
1434660000	85	168	110	70	70	80	78	M64x3	83	17.0

Plain Rod Eye / Knuckle

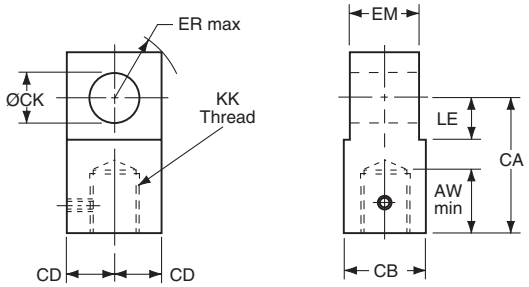

Clevis Bracket Dimensions

Part No.	CK Ø H9	CM A16	CW	FL	MR max	HB	LE min	RC	TB	UR	UH
1436460000	10	12	6	23	12	5.5	13	18	47	35	60
1436470000	12	16	8	29	17	6.6	19	24	57	45	70
1436480000	14	20	10	29	17	9	19	30	68	55	85
1436490000	20	30	15	48	29	13.5	32	45	102	80	125
1436500000	28	40	20	59	34	17.5	39	60	135	100	170
1436510000	36	50	25	79	50	17.5	54	75	167	130	200
1436520000	45	60	30	87	53	26	57	90	183	150	230
1436530000	56	70	35	103	59	30	63	105	242	180	300
1436540000	70	80	40	132	78	33	82	120	300	200	360

Clevis Bracket

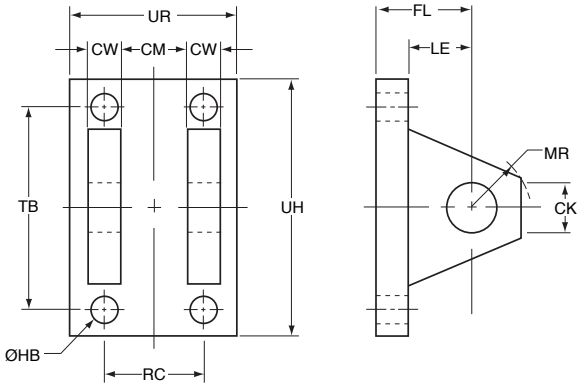

Clevis Bracket – for Cap Eye Mount

Bore Ø	Part No.	Nominal Force kN	Weight kg
25	1436460000	8	0.4
32	1436470000	12.5	0.8
40	1436480000	20	1.0
50	1436490000	32	2.5
63	1436490000	50	2.5
80	1436500000	80	5.0
100	1436510000	125	9.0
125	1436520000	200	20.0
160	1436530000	320	31.0
200	1436540000	500	41.0

Pivot Pin for Clevis Bracket and Plain Rod Eye – Dimensions

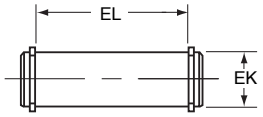

All dimensions are in millimeters unless otherwise stated.

Part No.	EK Ø f8	EL	Weight kg
1434770000	10	29	0.02
1434780000	12	37	0.05
1434790000	14	45	0.08
1434800000	20	66	0.2
1434810000	28	87	0.4
1434820000	36	107	1.0
1434830000	45	129	1.8
1434840000	56	149	4.2
1434850000	70	169	6.0

⚠ PROP 65 WARNING **WARNING:** This product can expose you to chemicals including Lead and Lead Compounds which are known to the State of California to cause cancer and birth defects or other reproductive harm. For more information go to www.P65Warnings.ca.gov

Rod Eye with Spherical Bearing, Mounting Bracket and Pivot Pin

KK Thread	Rod Eye with Spherical Bearing	Mounting Bracket and Pivot Pin	Nominal Force kN	Weight kg
M10x1.25	1452540000	1455300000	8	0.2
M12x1.25	1452550000	1455310000	12.5	0.3
M14x1.5	1452560000	1455320000	20	0.4
M16x1.5	1452570000	1455330000	32	0.7
M20x1.5	1452580000	1455340000	50	1.3
M27x2	1452590000	1455350000	80	2.3
M33x2	1452600000	1455360000	125	4.4
M42x2	1452610000	1455370000	200	8.4
M48x2	1452620000	1455380000	320	15.6
M64x3	1452630000	1455390000	500	28.0

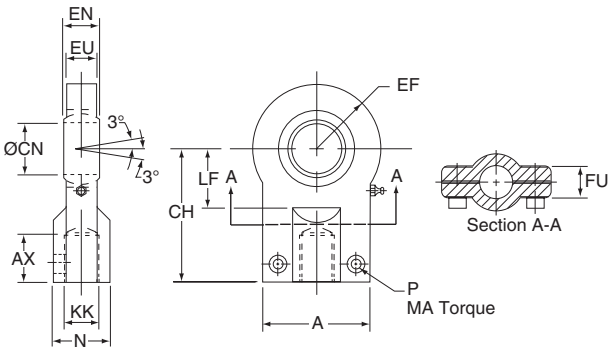

Rod Eye with Spherical Bearing

All spherical bearings should be re-packed with grease when servicing. In unusual or severe working conditions, consult the factory regarding the suitability of the bearing chosen.

Rod Eye with Spherical Bearing Dimensions

Part No.	A max	AX min	EF max	CH	CN Ø	EN	EU	FU	KK Thread	LF min	N max	MA max Nm	P
1452540000	40	15	20	42	12 -0.008	10 -.012	8	13	M10x1.25	16	17	10	M6
1452550000	45	17	22.5	48	16 -0.008	14 -.012	11	13	M12x1.25	20	21	10	M6
1452560000	55	19	27.5	58	20 -0.012	16 -.012	13	17	M14x1.5	25	25	25	M8
1452570000	62	23	32.5	68	25 -0.012	20 -.012	17	17	M16x1.5	30	30	25	M8
1452580000	80	29	40	85	30 -0.012	22 -.012	19	19	M20x1.5	35	36	45	M10
1452590000	90	37	50	105	40 -0.012	28 -.012	23	23	M27x2	45	45	45	M10
1452600000	105	46	62.5	130	50 -0.012	35 -.012	30	30	M33x2	58	55	80	M12
1452610000	134	57	80	150	60 -0.015	44 -.015	38	38	M42x2	68	68	160	M16
1452620000	156	64	102.5	185	80 -0.015	55 -.015	47	47	M48x2	92	90	310	M20
1452630000	190	86	120	240	100 -0.020	70 -.020	57	57	M64x3	116	110	530	M24

Mounting Bracket and Pivot Pin Dimensions

Part No.	CF Ø K7/h6	CG +0.1, +0.3	CO N9	CP	FM js11	FO js14	GL js13	HB Ø	KC 0, +0.30	LG	LJ	LO	RE js13	SR max	TA js13	UJ	UK
1455300000	12	10	10	30	40	16	46	9	3.3	28	29	56	55	12	40	75	60
1455310000	16	14	16	40	50	18	61	11	4.3	37	38	74	70	16	55	95	80
1455320000	20	16	16	50	55	20	64	14	4.3	39	40	80	85	20	58	120	90
1455330000	25	20	25	60	65	22	78	16	5.4	48	49	98	100	25	70	140	110
1455340000	30	22	25	70	85	24	97	18	5.4	62	63	120	115	30	90	160	135
1455350000	40	28	36	80	100	24	123	22	8.4	72	73	148	135	40	120	190	170
1455360000	50	35	36	100	125	35	155	30	8.4	90	92	190	170	50	145	240	215
1455370000	60	44	50	120	150	35	187	39	11.4	108	110	225	200	60	185	270	260
1455380000	80	55	50	160	190	35	255	45	11.4	140	142	295	240	80	260	320	340
1455390000	100	70	63	200	210	35	285	48	12.4	150	152	335	300	100	300	400	400

Cap Mounting Bracket and Pivot Pin

Bore Ø	Mounting Bracket and Pivot Pin	Nominal Force kN	Weight kg
25	1455300000	8	0.6
32	1455310000	12.5	1.3
40	1455320000	20	2.1
50	1455330000	32	3.2
63	1455340000	50	6.5
80	1455350000	80	12.0
100	1455360000	125	23.0
125	1455370000	200	37.0
160	1455380000	320	79.0
200	1455390000	500	140.0

Mounting Bracket and Pivot Pin

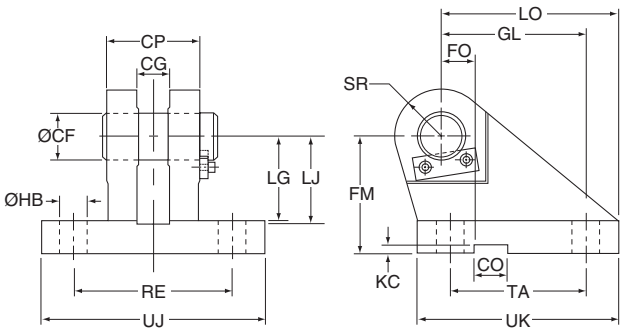

All dimensions are in millimeters unless otherwise stated.

How to Order ISO Cylinders

Data Required On All Cylinder Orders

When ordering Series HMI cylinders, be sure to specify each of the following requirements:

(**NOTE:** – Duplicate cylinders can be ordered by giving the SERIAL NUMBER from the nameplate of the original cylinder. Factory records supply a quick, positive identification.)

a) Bore Size

b) Mounting Style
Specify your choice of mounting style – as shown and dimensioned in this catalog. If double rod is required, specify "with double rod."

c) Series Designation ("HMI")

d) Length of Stroke

e) Piston Rod Diameter
Call out rod diameter or rod code number. In Series HMI cylinders, standard rod diameters (Code No. 1) will be furnished if not otherwise specified, unless length of stroke makes the application questionable.

f) Piston Rod End Thread Style
Call out thread style number or specify dimensions. Thread style number 4 will be furnished if not otherwise specified.

g) Cushions (if required)
Specify "Cushion-head end," "Cushion-cap end" or "Cushion-both ends" as required. If cylinder is to have a double rod and only one cushion is required, be sure to specify clearly which end of the cylinder is to be cushioned.

h) Piston
B style pistons are standard. Fluorocarbon also available.

i) Ports
BSP (ISO 228) are standard.

j) Fluid Medium
Series HMI hydraulic cylinders are equipped with seals for use with hydraulic oil. If other than hydraulic oil will be used, consult factory.

ADDITIONAL DATA is required on orders for cylinders with special modifications.
For further information, consult factory.

Service Policy

On cylinders returned to the factory for repairs, it is standard policy for the Hydraulic Actuator Division to make such part replace-ments as will put the cylinder in as good as new condition. Should the condition of the returned cylinder be such that expenses for repair would exceed the costs of a new one, you will be notified.

Address all correspondence to Service Department at your nearest regional plant listed in the pages of this catalog.

Certified Dimensions

Hydraulic Actuator Division guarantees that all cylinders ordered from this catalog will be built to dimensions shown. All dimensions are certified to be correct, and thus it is not necessary to request certified drawings.

⚠ **PROP 65 WARNING** **WARNING:** This product can expose you to chemicals including Lead and Lead Compounds which are known to the State of California to cause cancer and birth defects or other reproductive harm. For more information go to www.P65Warnings.ca.gov

Series HMI Model Numbers- How to Develop and "Decode" Them

80	C	K	C	K	HMI	R	B	S	1
Bore Dia.	Cushion Head	Double Rod End Cylinder	Mounting Style	Mounting Modification	Series	Ports	Piston	Special Features	Piston Rod Number

Bore Dia.

Specify bore dia. in mm.
- 25
- 32
- 40
- 50
- 63
- 80
- 100
- 125
- 160
- 200

Cushion Head

Use "C" only if head end cushion is required.

Double Rod End Cylinder

Use "K" only if a double rod end cylinder is required.[1]

Mounting Style

Mounting style offering varies by series. See 'Standard Specifications' pages for availability.

TB = Tie Rods Extended Head
TC = Tie Rods Extended Cap
TD = Tie Rods Extended Both Ends
JJ = Head Rectangular
HH = Cap Rectangular
C = Side Lug
B = Cap Fixed Eye
BB = Cap Fixed Clevis
D = Head Trunnion
DB = Cap Trunnion
DD = Intermediate Fixed Trunnion
SB* = Cap Fixed Eye

Mounting Modification

Thrust Key for Style C mounting only
P = 25mm & 32mm Bores
K = 40mm bore and higher

Series

Series name

Ports

R = BSP (ISO 228) standard
B = BSPT (Taper Thread)
M = Metric Thread
Y = Metric Thread per ISO 6149
T = SAE - Straight Thread O-Ring Port
U = NPTF (Dry Seal Pipe Thread)
P = SAE - Flange Ports (3000 PSI)

Piston

Lipseal™ Piston**
(standard 25mm - 40mm bores)
B-Style Bi-Directional Piston Seal
(standard 50mm - 200mm bores)
Mixed Media Low Friction Piston Seal
(optional 25 - 200mm bores)

Special Features

One or more of the following:
- Gland Drain Port
- Oversize Ports
- Rod end Bellows
- Stop Tube
- Stroke Adjuster
- Tie Rod Supports
- Water Service
- Modifications or to detailed descriptions or drawings supplied by customer

Piston Rod Number

Rod No. 1
Rod No. 2
Rod No. 3

*Mounting Style SB is also known as Parker Style SBd in Parker's European model code system.

**Lipseal piston not available 50mm - 200mm bores. Contact factory regarding B-style piston availability in 25mm - 40mm bores.

⚠ **PROP 65 WARNING** **WARNING:** This product can expose you to chemicals including Lead and Lead Compounds which are known to the State of California to cause cancer and birth defects or other reproductive harm. For more information go to www.P65Warnings.ca.gov

Series HMI Model Numbers- How to Develop and "Decode" Them

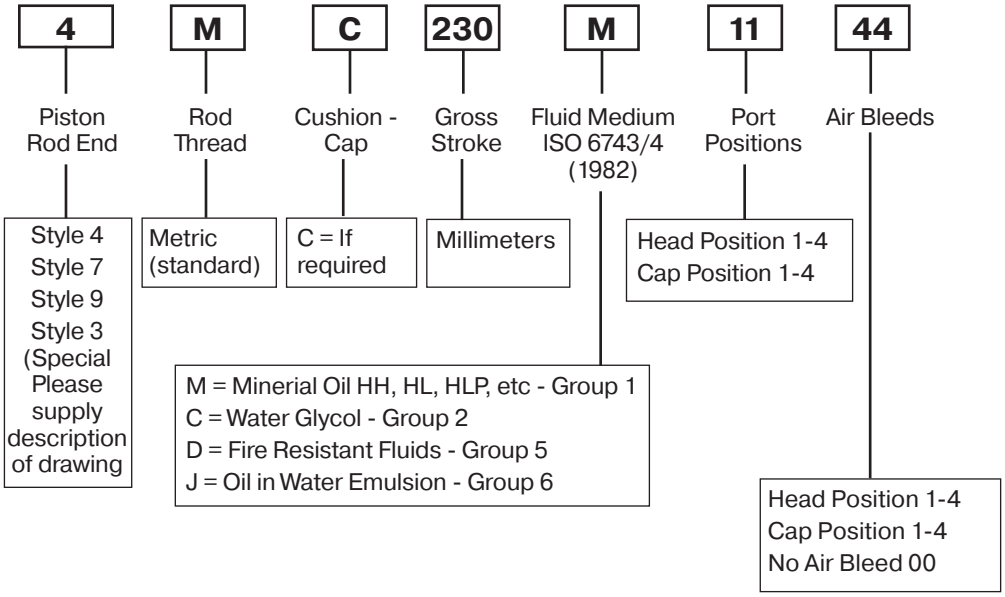

⚠ **PROP 65 WARNING** **WARNING:** This product can expose you to chemicals including Lead and Lead Compounds which are known to the State of California to cause cancer and birth defects or other reproductive harm. For more information go to www.P65Warnings.ca.gov

Service Assemblies and Seal Kits

Service Assembly Kits and Seal Kits for HMI cylinders simplify the ordering and maintenance processes. They contain sub-assemblies which are ready for installation, and are supplied with full instructions. When ordering Service Assemblies and Seal Kits, please refer to the identification plate on the cylinder body, and supply the following information:

Serial Number - Bore - Stroke - Model Number - Fluid Type

Key to Part Numbers

1 Head
7 Cap
14 Gland/Bearing cartridge
15 Cylinder body
17 Piston
18 Cushion sleeve
19 Tie rod
23 Tie rod nut
26 Back-up washer (not 25-50mm bore cylinders)
27 Retainer
34 Piston rod – single rod, no cushion
35 Piston rod – single rod, cushion at head end
36 Piston rod – single rod, cushion at cap end
37 Piston rod – single rod, cushion at both ends
40 Wiperseal – for 14 and 122
41 Lipseal – for 14
42 Lipseal, Piston 25-40mm bores only
43 Back-up washer, bushing lipseal 41 (not Group 1 seals)
44 Back-up washer, piston lipseal
45 O-ring – gland/head
47 O-ring – cylinder body
57[1] Piston rod – double rod, no cushion
58[1] Piston rod – double rod, cushion one end
60[1] Piston rod – double rod, no cushion
61[1] Piston rod – double rod, cushion one end
69 O-ring – needle valve and check valve screws
70[2] Needle valve, cushion adjustment
70a[2] Needle valve, cushion adjustment – cartridge type
70b Cartridge screw
70c O-ring – cartridge screw
70d Needle screw
70e Back-up washer – needle screw
70f O-ring – needle screw
71 Ball – cushion check valve
72 Cushion check valve screw
73 Floating cushion bushing
74 Retaining ring for cushion bushing
125 Standard piston seal
126 Energizing ring for standard seal 125
127 Wear ring for standard piston

[1]Not illustrated
[2]In some cases, the adjusting screw is installed in a cartridge.

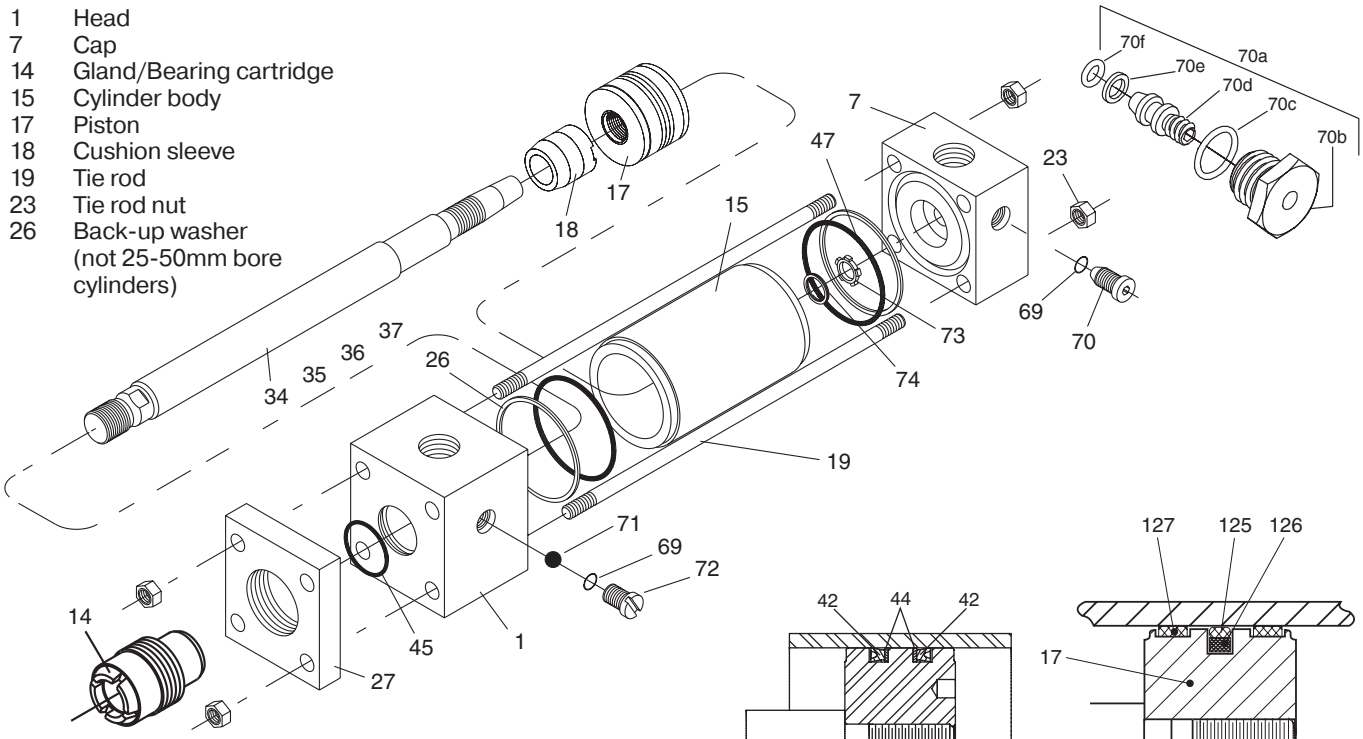

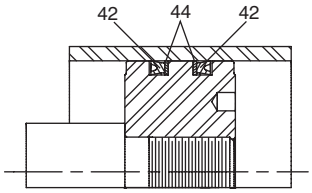

Piston 25mm, 32mm and 40mm bore

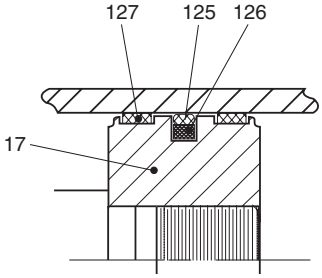

Piston 50mm bore and larger

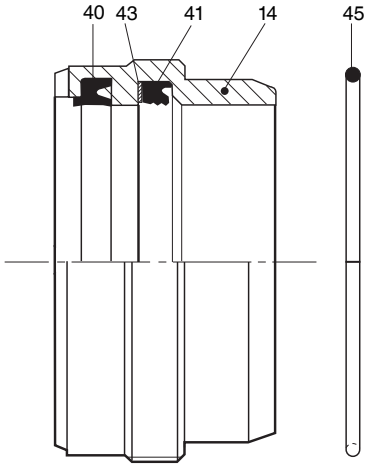

Gland Cartridge and Seals

⚠ **PROP 65 WARNING** **WARNING:** This product can expose you to chemicals including Lead and Lead Compounds which are known to the State of California to cause cancer and birth defects or other reproductive harm. For more information go to www.P65Warnings.ca.gov

Contents and Part Numbers of Seal Kits for Piston and Gland

(See key to part numbers opposite)

RG Kit – Gland Cartridge and Seals* Contain items 14, 40, 41, 43, 45. Where the original gland incorporates a gland drain, please consult the factory.

RK Kit – Gland Cartridge Seals* Contain items 40, 41, 43, 45.

Rod Ø	RG Kit*	PK Kit*
12	RG2HM0121	RK2HM0121
14	RG2HM0141	RK2HM0141
18	RG2HM0181	RK2HM0181
22	RG2HM0221	RK2HM0221
28	RG2HM0281	RK2HM0281
36	RG2HM0361	RK2HM0361
45	RG2HM0451	RK2HM0451
56	RG2HM0561	RK2HM0561
70	RG2HM0701	RK2HM0701
90	RG2HM0901	RK2HM0901
110	RG2HM1101	RK2HM1101
140	RG2HM1401	RK2HM1401

CB Kit – Cylinder Body End Seals* Contain two each of items 47, 26 (not 25-50mm bore).

Piston Kit

B-Style Piston Kit – (includes Cylinder Body End Seals) Contains two each of items 47, 26 (no backup washer in 25mm-50mm bores), two of item 127 and one each of items 125, 126.

Lipseal Piston Kit – (includes Cylinder Body End Seals) Contains two each of items 42, 44 and 47.

Bore Ø	CB Body Seal Kit*	B-Style Piston Seal Kit*	Piston Lipseal™ Kit†
25	CB025HM001	PF025HM001	PL025HM005*
32	CB032HM001	PF032HM001	PF032HM005*
40	CB040HM001	PF040HM001	PF040HM005*
50	CB050HM001	PF050HM001	N/A
63	CB063HM001	PF063HM001	
80	CB080HM001	PF080HM001	
100	CB100HM001	PF100HM001	
125	CB125HM001	PF125HM001	
160	CB160HM001	PF160HM001	
200	CB200HM001	PF200HM001	

† Piston Lipseals were made standard in 25mm - 40mm bores beginning in June 2006. Carefully check the model number for a 'B' - B-Style or 'L' - Lipseal Style piston before specifying a piston seal kit.

*Piston Lipseal Kits contain group 5 seals that are also suitable for group 1 service.

*Seal Groups – Ordering

The part numbers shown in the tables above are for Group 1 seals, denoted by the last character of each part number. For Groups 2, 5 and 6 substitute a 2, 5 or 6 for the '1' at the end of the number sequence.

Piston Lipseal Kits contain Group 5 seals that are also suitable for Group 1 service.

Tie Rod Torques

Bore Ø	Tie Rod Torque Nm
25	4.5-5.0
32	7.6-9.0
40	19.0-20.5
50	68-71
63	68-71
80	160-165
100	160-165
125	450-455
160	815-830
200	1140-1155

Repairs

Although HMI cylinders are designed to make on-site maintenance or repairs as easy as possible, some operations can only be carried out in our factory. It is standard policy to fit a cylinder returned to the factory for repair with those replacement parts which are necessary to return it to 'as good as new' condition. Should the condition of the returned cylinder be such that repair would be uneconomical, you will be notified.

NOTE: For installation instructions for Seal Kits for Series HMI cylinders, see bulletin 0995-M17.

Rod Ø	Gland Cartridge Wrench 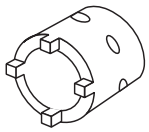	Spanner Wrench 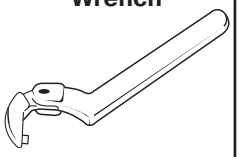
12	0695900000	0116760000
14	0695900000	0116760000
18	0847650000	0116760000
22	0695910000	0116760000
28	0847660000	0117030000
36	0695920000	0117030000
45	0695930000	0116770000
56	0695950000	0116770000
70	0695960000	0116770000
90	0847680000	0116770000
110	–	–
140	–	–

⚠ PROP 65 WARNING **WARNING:** This product can expose you to chemicals including Lead and Lead Compounds which are known to the State of California to cause cancer and birth defects or other reproductive harm. For more information go to www.P65Warnings.ca.gov

Mounting Styles

General guidance for the selection of ISO mounting styles can be found on page 4. The notes which follow provide information for use in specific applications and should be read in conjunction with that information.

Trunnions

Trunnions require lubricated pillow blocks with minimum bearing clearances. Blocks should be aligned and mounted to eliminate bending moments on the trunnion pins. Self-aligning mounts must not be used to support the trunnions as bending forces can develop.

Intermediate trunnions may be positioned at any point on the cylinder body. This position, dimension XI, should be specified at the time of order. Trunnion position is not field adjustable.

Flange Mountings

Front flange-mounted (style JJ) cylinders incorporate a pilot diameter for accurate alignment on the mounting surface – see rod end dimensions for HMI cylinders. The gland retainer is integral with the head on 25, 32 and 40mm bore cylinders, while on 50mm bores and above, the circular retainer is bolted to the head.

Extended Tie Rods

Cylinders may be ordered with extended tie rods in addition to another mounting style. The extended tie rods may then be used for mounting other systems or machine components.

Pivot Mountings

Pivot pins are supplied with style BB cap fixed clevis mounted cylinders. Pivot pins are not supplied with the cap fixed eye mounting, style B, or the cap with spherical bearing, style SB, where pin length will be determined by the customer's equipment.

Spherical Bearings

The service life of a spherical bearing is influenced by such factors as bearing pressure, load direction, sliding velocity and frequency of lubrication. When considering severe or unusual working conditions, please consult the factory.

Foot Mountings and Thrust Keys

The bending moment which results from the application of force by a foot mounted cylinder must be resisted by secure mounting and effective guidance of the load. A thrust key modification is recommended to provide positive cylinder location.

Thrust key mountings eliminate the need for fitted bolts or external keys on Style C side mounted cylinders. The gland retainer plate of 25mm & 32mm bore cylinders is extended below the nominal mounting surface to fit into a keyway milled into the mounting surface of the machine member. To order a key retainer plate in 25mm & 32mm bores, specify P in the Mounting Modification field of the model code.

Bore Ø	Rod Ø	Nominal		FA -0.075	GD	PA -0.2
		F1 Standard	F2 w/ Gland Drain			
25	All	10	10[1]	8	–	5
32	14	10	10[1]	8	–	5
	22	10	16	8	6	5

[1] Gland drain is in the head. See page 29 for additional details about gland drain ports.

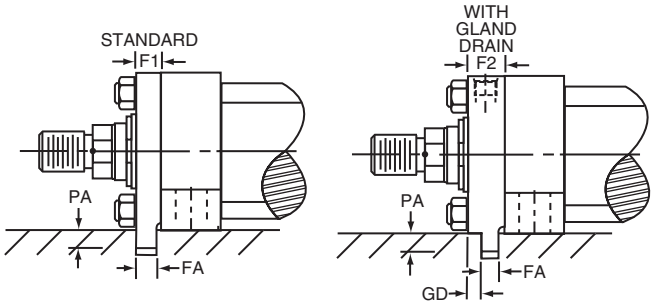

Profile of thrust key extension (with gland drain in retainer) for bore and rod combination 32mm x 22mm.

Integral Key – 25mm & 32mm Bores

All dimensions are in millimeters unless otherwise stated.

Cylinders 40mm to 200mm bore utilize a keyway milled into the Style C head on the mounting lug side. A key (supplied) fits into the cylinder keyway and a corresponding keyway in the mounting surface of the machine member. To order the milled keyway and key in 40mm to 200mm bores, specify K in the Mounting Modification field of the model code.

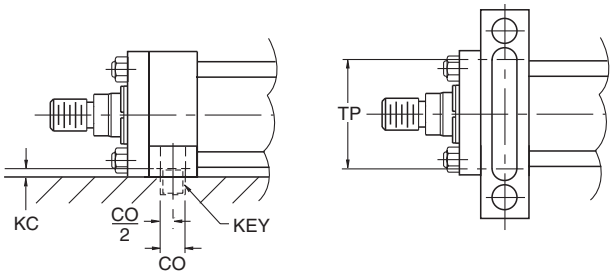

Milled Keyway – 40mm to 200mm Bore

Bore Ø	CO N9	KC +0.5	TP[2] min
40	12	4	55
50	12	4.5	70
63	16	4.5	80
80	16	5	105
100	16	6	120
125	20	6	155
160	32	8	190
200	40	8	220

[2] Suggested Key Length

Key				
Bore Ø	Width	Height	Length	Part No.
40	12	8	55	0941540040
50	12	8	70	0941540050
63	16	10	80	0941540063
80	16	10	105	0941540080
100	16	10	120	0941540100
125	20	12	155	0941540125
160	32[3]	18	190	0941540160
200	40	22	220	0941540200

[3] Not to ISO6020/2.

⚠ PROP 65 WARNING **WARNING:** This product can expose you to chemicals including Lead and Lead Compounds which are known to the State of California to cause cancer and birth defects or other reproductive harm. For more information go to www.P65Warnings.ca.gov

Mounting Bolts and Nuts

Hydraulic Actuator Division recommends that mounting bolts with a minimum strength of ISO 898/1 grade 10.9 should be used for fixing cylinders to the machine or base. This recommendation is of particular importance where bolts are placed in tension or subjected to shear forces. Mounting bolts, with lubricated threads, should be torque loaded to their manufacturer's recommended figures. Tie rod mounting nuts should be to a minimum strength of ISO 898/2 grade 10, torque loaded to the figures shown.

Bore Ø	Tie Rod Torque Nm
25	4.5-5.0
32	7.6-9.0
40	19.0-20.5
50	68-71
63	68-71
80	160-165
100	160-165
125	450-455
160	815-830
200	1140-1155

Intermediate or Additional Mountings

Long cylinders with fixed mountings such as extended tie rods may require additional support to counter sagging or the effects of vibration. This may be provided mid-way along the cylinder body in the form of an intermediate mounting or, with end-mounted cylinders, as an additional mounting supporting the free end of the cylinder. Please contact the factory for further information. The maximum unsupported stroke lengths which Hydraulic Actuator Division recommends for each bore size are shown in the table below.

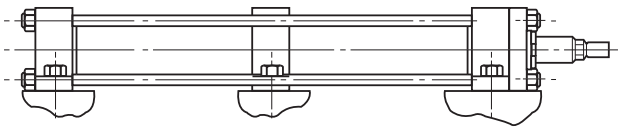

Intermediate Foot Mounting

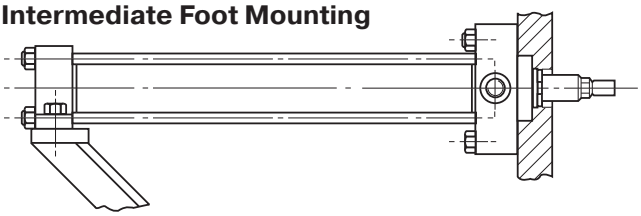

End Support Mounting

Maximum Stroke Lengths of Unsupported Cylinders (in mm)

Bore Ø	Intermediate Mounting	End Support Mounting
25, 32, 40	1500	1000
50, 63, 80	2000	1500
100, 125	3000	2000
160, 200	3500	2500

All dimensions are in millimeters unless otherwise stated.

Tie Rod Supports

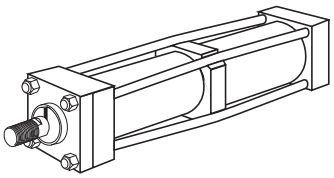

To increase the resistance to buckling of long stroke cylinders, tie rod supports may be fitted. These move the tie rods radially outwards and allow longer than normal strokes to be used without the need for an additional mounting.

Bore Ø	Stroke (meters) 0.9	1.2	1.5	1.8	2.1	2.4	2.7	3.0	3.3	3.6	3.9	4.2	No. of Supports Required
25	1	1	2	Consult Factory									
32	-	1	1	2									
40	-	-	1	1	1	2	2						
50	-	-	-	1	1	1	2	2	2	2	2	3	
63	-	-	-	-	-	1	1	1	1	1	2	2	
80	-	-	-	-	-	-	-	1	1	1	1	1	
100	-	-	-	-	-	-	-	-	-	1	1	1	

Stroke Tolerances

Stroke length tolerances are required due to the build-up of tolerances of piston, head, cap and cylinder body. Standard production stroke tolerances are 0 to +2mm on all bore sizes and stroke lengths. For closer tolerances, please specify the required tolerance plus the operating temperature and pressure. Stroke tolerances of less than 0.4mm are generally impracticable due to the elasticity of cylinders. In these cases, the use of a stroke adjuster should be considered. Tolerances of stroke dependent dimensions for each mounting style are shown in the table below.

Stroke Dependent Tolerances

Mounting Style	Dimensions	Tolerance - for strokes up to 3m
All styles - port dimensions	Y	±2
	PJ	±1.25
JJ (ME5)	ZB	max
HH (ME6)	ZJ	±1
BB (MP1) B(MP3)	XC	±1.25
SB (MP5)	XO	±1.25
C (MS2)	XS ZB SS	±2 max ±1.25
D (MT1)	XG ZB	±2 max
DB (MT2)	XJ ZB	±1.25 max
DD (MT4)	XV ZB	±2 max
TD (MX1) TC (MX2) TB (MX3)	BB	+3 0
TB (MX3)	ZB	max
TD (MX1) TB (MX3)	WH	±2
TD (MX1) TC (MX2) TB (MX3)	ZJ	±1

⚠ **PROP 65 WARNING** **WARNING:** This product can expose you to chemicals including Lead and Lead Compounds which are known to the State of California to cause cancer and birth defects or other reproductive harm. For more information go to www.P65Warnings.ca.gov

Calculation of Cylinder Diameter

General Formula

The cylinder output forces are derived from the formula:

$$F = \frac{P \times A}{10000}$$

Where F = Force in kN.

P = Pressure at the cylinder in bar.

A = Effective area of cylinder piston in square mm.

Prior to selecting the cylinder bore size, properly size the piston rod for tension (pull) or compression (push) loading (see the Piston Rod Selection Chart).

If the piston rod is in compression, use the 'Push Force' table below, as follows:

1. Identify the operating pressure closest to that required.
2. In the same column, identify the force required to move the load (always rounding up).
3. In the same row, look along to the cylinder bore required.

If the cylinder envelope dimensions are too large for the application, increase the operating pressure, if possible, and repeat the exercise.

Push Force

Bore Ø mm	Bore Area sq. mm	Cylinder Push Force in kN						
		10 bar	40 bar	63 bar	100 bar	125 bar	160 bar	210 bar
25	491	0.5	2.0	3.1	4.9	6.1	7.9	10.3
32	804	0.8	3.2	5.1	8.0	10.1	12.9	16.9
40	1257	1.3	5.0	7.9	12.6	15.7	20.1	26.4
50	1964	2.0	7.9	12.4	19.6	24.6	31.4	41.2
63	3118	3.1	12.5	19.6	31.2	39.0	49.9	65.5
80	5027	5.0	20.1	31.7	50.3	62.8	80.4	105.6
100	7855	7.9	31.4	49.5	78.6	98.2	125.7	165.0
125	12272	12.3	49.1	77.3	122.7	153.4	196.4	257.7
160	20106	20.1	80.4	126.7	201.1	251.3	321.7	422.2
200	31416	31.4	125.7	197.9	314.2	392.7	502.7	659.7

If the piston rod is in tension, use the 'Deduction for Pull Force' table. The procedure is the same but, due to the reduced area caused by the piston rod, the force available on the 'pull' stroke will be smaller. To determine the pull force:

1. Follow the procedure for 'push' applications as described above.
2. Using the 'pull' table, identify the force indicated according to the rod and pressure selected.
3. Deduct this from the original 'push' force. The resultant is the net force available to move the load.

If this force is not large enough, repeat the process and increase the system operating pressure or cylinder diameter if possible. For assistance, contact your local authorized distributor.

Deduction for Pull Force

Piston Rod Ø mm	Piston Rod Area sq. mm	Reduction in Force in kN						
		10 bar	40 bar	63 bar	100 bar	125 bar	160 bar	210 bar
12	113	0.1	0.5	0.7	1.1	1.4	1.8	2.4
14	154	0.2	0.6	1.0	1.5	1.9	2.5	3.2
18	255	0.3	1.0	1.6	2.6	3.2	4.1	5.4
22	380	0.4	1.5	2.4	3.8	4.8	6.1	8.0
28	616	0.6	2.5	3.9	6.2	7.7	9.9	12.9
36	1018	1.0	4.1	6.4	10.2	12.7	16.3	21.4
45	1591	1.6	6.4	10.0	15.9	19.9	25.5	33.4
56	2463	2.5	9.9	15.6	24.6	30.8	39.4	51.7
70	3849	3.8	15.4	24.2	38.5	48.1	61.6	80.8
90	6363	6.4	25.5	40.1	63.6	79.6	101.8	133.6
110	9505	9.5	38.0	59.9	95.1	118.8	152.1	199.6
140	15396	15.4	61.6	97.0	154.0	192.5	246.3	323.3

⚠ **PROP 65 WARNING** **WARNING:** This product can expose you to chemicals including Lead and Lead Compounds which are known to the State of California to cause cancer and birth defects or other reproductive harm. For more information go to www.P65Warnings.ca.gov

Piston Rod Size Selection

To select a piston rod for thrust (push) applications, follow these steps:

1. Determine the type of cylinder mounting style and rod end connection to be used. Consult the Stroke Factor table on page 22 and determine which factor corresponds to the application.
2. Using the appropriate stroke factor from page 22, determine the 'basic length' from the equation:

Basic Length = Net Stroke x Stroke Factor

(The graph is prepared for standard rod extensions beyond the face of the gland retainers. For rod extensions greater than standard, add the increases to the net stroke to arrive at the 'basic length.')

3. Calculate the load imposed for the thrust application by multiplying the full bore area of the cylinder by the system pressure, or by referring to the Push and Pull Force charts on previous page.
4. Using the graph below, look along the values of 'basic length' and 'thrust' as found in 2 and 3 above, and note the point of intersection.

The correct piston rod size is read from the diagonally curved line labelled 'Rod Diameter' above the point of intersection.

Stop Tubes

The required length of stop tube, where necessary, is read from the vertical columns on the right of the graph below by following the horizontal band within which the point of intersection, determined in steps 2 and 3 opposite, lies.

Note that stop tube requirements differ for fixed and pivot mounted cylinders.

If the required length of stop tube is in the region labeled 'consult factory,' please submit the following information:

1. Cylinder mounting style.
2. Rod end connection and method of guiding load.
3. Bore required, stroke, length of rod extension (dimensions WF) if greater than standard.
4. Mounting position of cylinder. (Note: if at an angle or vertical, specify the direction of the piston rod.)
5. Operating pressure of cylinder, if limited to less than the standard pressure for the cylinder selected.

When specifying a cylinder with a stop tube, state the **gross** stroke of the cylinder and the length of the stop tube. The gross stroke is equal to the net (working) stroke of the cylinder plus the stop tube length. See the example below:

Ex. 80-JJ-HMI-R-E-S-14-M1375M1100

1) Stop tube = 175
2) Net stroke = 1200

– the cylinder net stroke will be 1200mm with 175mm of stop tube.

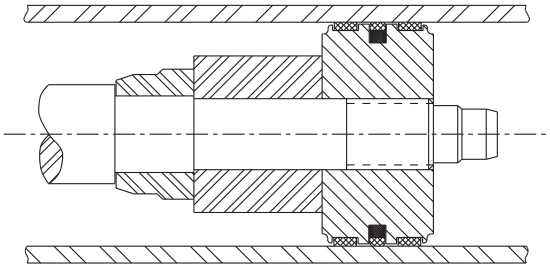

Piston Rod Selection Chart

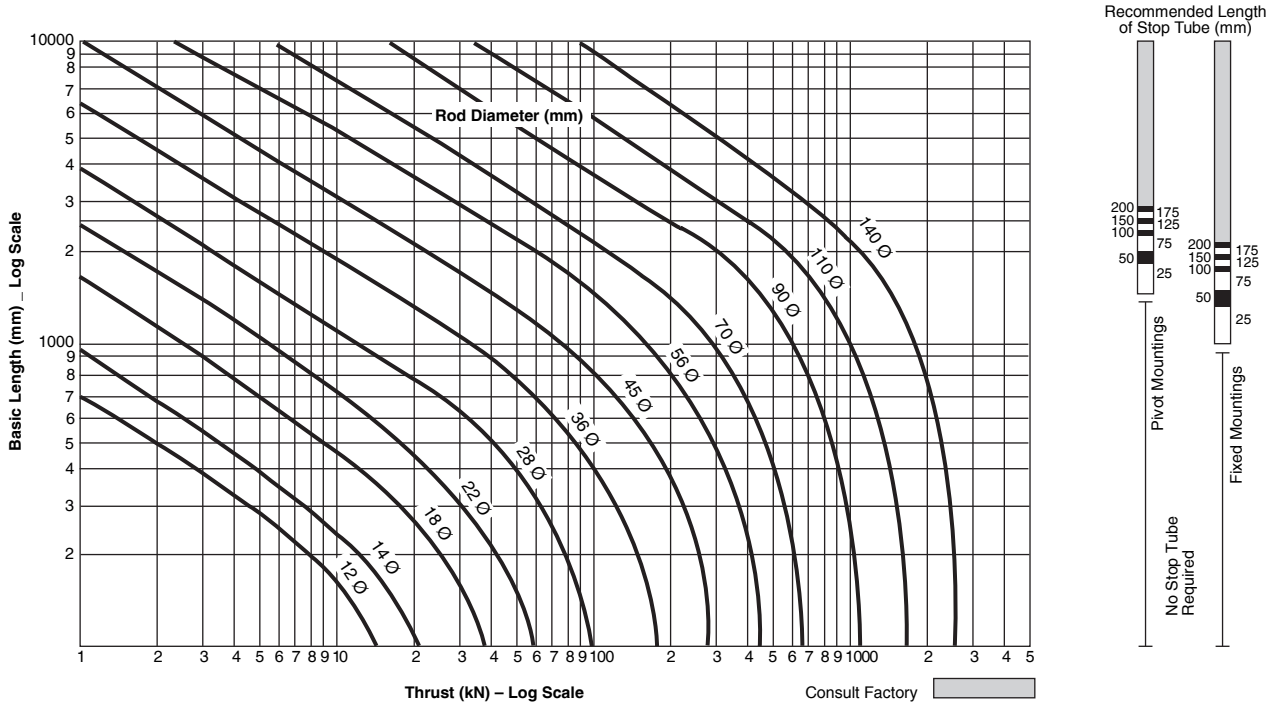

PROP 65 WARNING **WARNING:** This product can expose you to chemicals including Lead and Lead Compounds which are known to the State of California to cause cancer and birth defects or other reproductive harm. For more information go to www.P65Warnings.ca.gov

Stroke Factors

The stroke factors below are used in the calculation of cylinder 'basic length' – see Piston Rod Size Selection.

Rod End Connection	Mounting Style	Type of Mounting	Stroke Factor
Fixed and Rigidly Guided	TB, TD, C, JJ	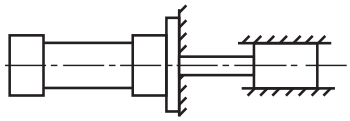	0.5
Pivoted and Rigidly Guided	TB, TD, C, JJ	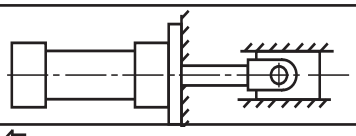	0.7
Fixed and Rigidly Guided	TC, HH	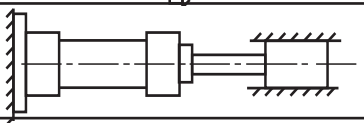	1.0
Pivoted and Rigidly Guided	D	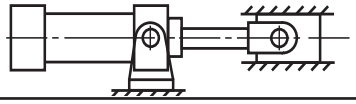	1.0
Pivoted and Rigidly Guided	TC, HH, DD	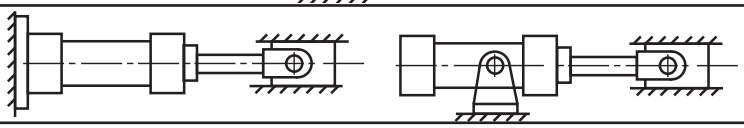	1.5
Supported but not Rigidly Guided	TB, TD, C, JJ	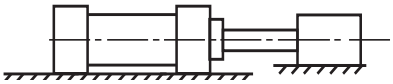	2.0
Pivoted and Rigidly Guided	B, BB, DB, SB	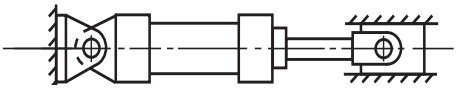	2.0
Pivoted and Supported but not Rigidly Guided	DD	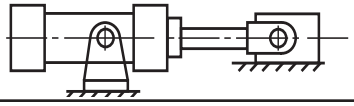	3.0

Long Stroke Cylinders

When considering the use of long stroke cylinders, the piston rod should be of sufficient diameter to provide the necessary column strength.

For tensile (pull) loads, the rod size is selected by specifying standard cylinders with standard rod diameters and using them at or below the rated pressure.

For long stroke cylinders under compressive loads, the use of stop tubes should be considered, to reduce bearing stress. The Piston Rod Selection Chart in this catalog provides guidance where unusually long strokes are required.

⚠ **PROP 65 WARNING** **WARNING:** This product can expose you to chemicals including Lead and Lead Compounds which are known to the State of California to cause cancer and birth defects or other reproductive harm. For more information go to www.P65Warnings.ca.gov

An Introduction to Cushioning

Cushioning is recommended as a means of controlling the deceleration of masses, or for applications where piston speeds are in excess of 0.1m/s and the piston will make a full stroke. Cushioning extends cylinder life and reduces undesirable noise and hydraulic shock.

Built-in "cushions" are optional and can be supplied at the head and cap ends of the cylinder without affecting its envelope or mounting dimensions.

Standard Cushioning

Ideal cushion performance shows an almost uniform absorption of energy along the cushioning length, as shown. Many forms of cushioning exist, and each has its own specific merits and advantages. In order to cover the majority of applications, HMI cylinders are supplied with profiled cushioning as standard. Final speed may be adjusted using the cushion screws. The performance of profiled cushioning is indicated on the diagram, and cushion performance for each of the rod sizes available is illustrated graphically in the charts on the next page.

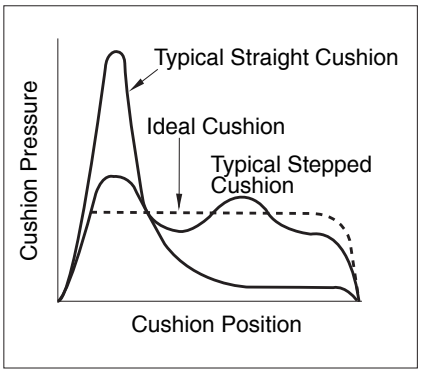

Note: Cushion performance will be affected by the use of water or high water based fluids. Please consult the factory for details.

Cushion Length

Where specified, HMI cylinders incorporate the longest cushion sleeve and spear that can be accommodated within the standard envelope without reducing the rod bearing and piston bearing lengths. See table of cushion lengths on page 25. Cushions are adjustable via recessed needle valves.

Cushion Calculations

The charts on the next page show the energy absorption capacity for each bore/rod combination at the head (annulus) and the cap (full bore) ends of the cylinder. The charts are valid for piston velocities in the range 0.1 to 0.3m/s. For velocities
between 0.3 and 0.5m/s, the energy values derived from the charts should be reduced by 25%. For velocities of less than 0.1m/s where large masses are involved, and for velocities of greater than 0.5m/s, a special cushion profile may be required. Please consult the factory for details.

The cushion capacity of the head end is less than that of the cap, and reduces to zero at high drive pressures due to the pressure intensification effect across the piston.

The energy absorption capacity of the cushion decreases with drive pressure.

Formula

Cushioning calculations are based on the formula $E = {}^1/_2mv^2$ for horizontal applications. For inclined or vertically downward or upward applications, this is modified to:

$E = {}^1/_2mv^2 + mgl \times 10^{-3} \times \sin a$

(for inclined or vertically downward direction of mass)

$E = {}^1/_2mv^2 - mgl \times 10^{-3} \times \sin a$

(for inclined or vertically upward direction of mass)

Where:

E	=	energy absorbed in Joules
g	=	acceleration due to gravity = $9.81 m/s^2$
v	=	velocity in meters/second
l	=	length of cushion in millimeters
m	=	mass of load in kilograms (including piston, rod and rod end accessories)
a	=	angle to the horizontal in degrees
p	=	pressure in bar

Example

The following example shows how to calculate the energy developed by masses moving in a straight line. For non-linear motion, other calculations are required; please consult the factory. The example assumes that the bore and rod diameters are already appropriate for the application. The effects of friction on the cylinder and load have been ignored.

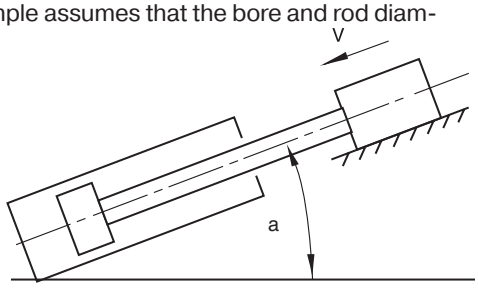

Selected bore/rod 160/70mm (No. 1 rod). Cushioning at the cap end.

Pressure	=	160 bar
Mass	=	10000kg
Velocity	=	0.4m/s
Cushion length	=	41mm
a	=	45°
Sin a	=	0.70

$E = {}^1/_2mv^2 + mgl \times 10^{-3} \times \sin a$

$$= \frac{10000 \times 0.4^2}{2} + 10000 \times 9.81 \times \frac{41}{10^3} \times 0.70$$

$= 800 + 2815 = 3615$ Joules

Note that velocity is greater than 0.3m/s; therefore, a derating factor of 0.75 must be applied before comparison with the curves on the cushioning charts. Applying this factor to the calculated energy figure of 3615 Joules gives a corrected energy figure of:

$$\frac{3615}{0.75} = 4820 \text{ Joules}$$

Comparison with the curve shows that the standard cushion can safely decelerate this load. If the calculated energy exceed that indicated by the curve, select a larger bore cylinder and re-calculate.

⚠ **PROP 65 WARNING** **WARNING:** This product can expose you to chemicals including Lead and Lead Compounds which are known to the State of California to cause cancer and birth defects or other reproductive harm. For more information go to www.P65Warnings.ca.gov

Cushion Energy Absorption Capacity Data

The cushion energy absorption capacity data shown below is based on the maximum fatigue-free pressure developed in the tube. For applications with a life cycle of less than 10^6 cycles, greater energy absorption figures can be applied. Please consult the factory if further information is required.

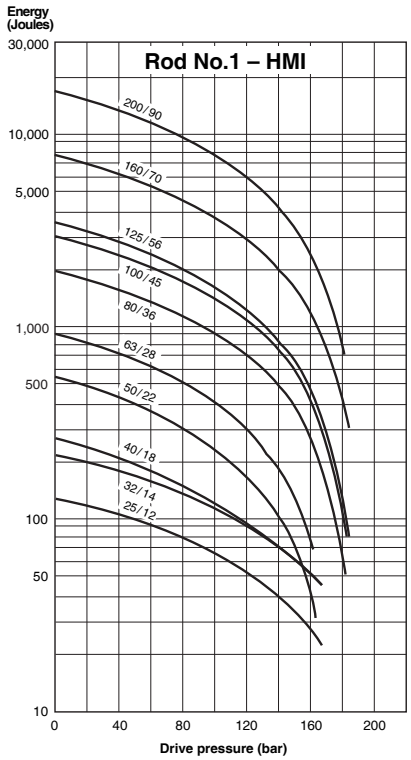

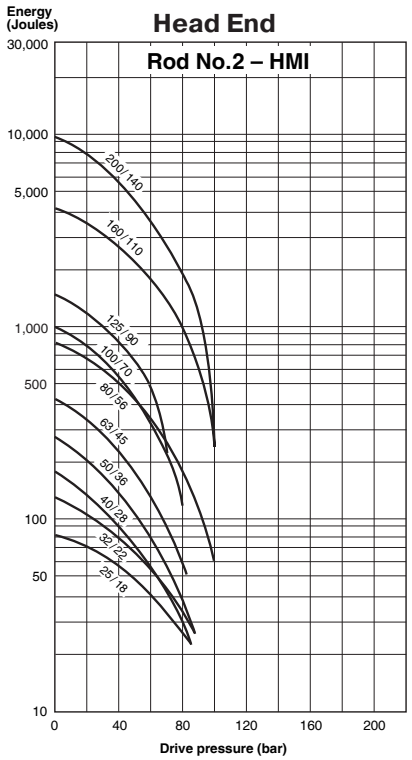

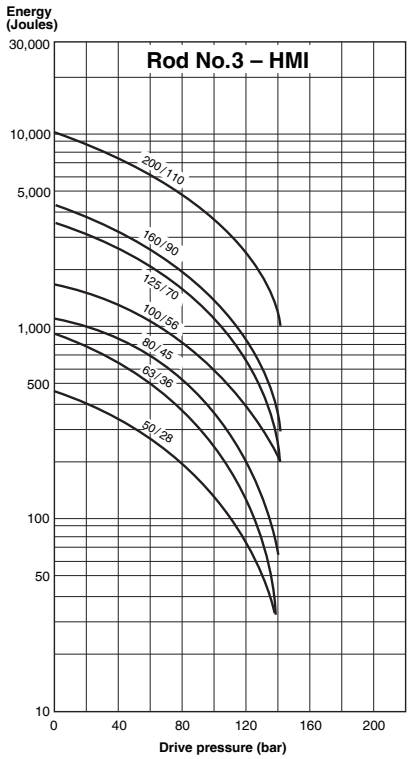

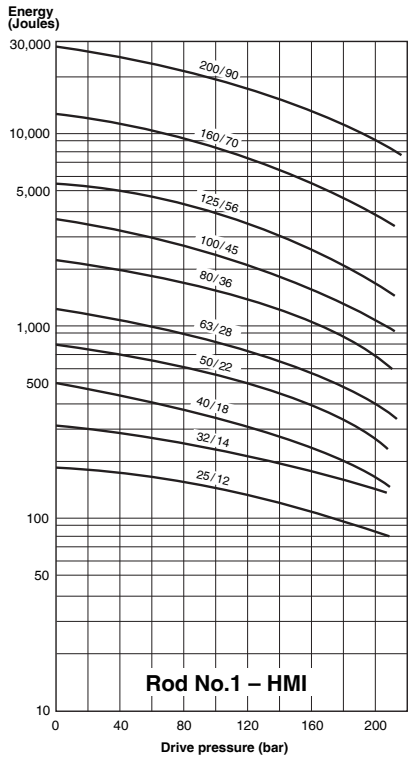

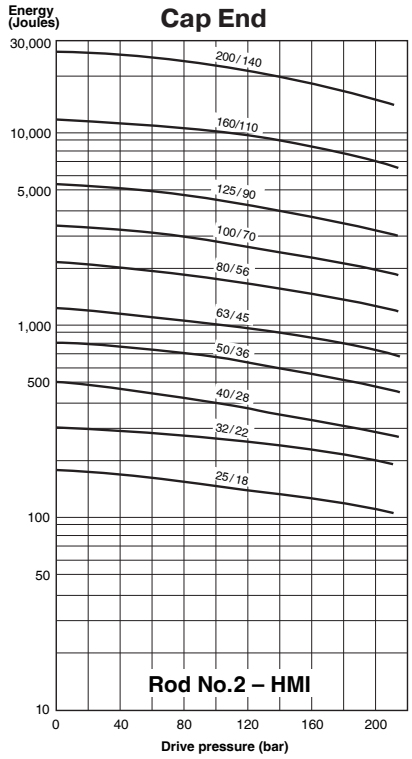

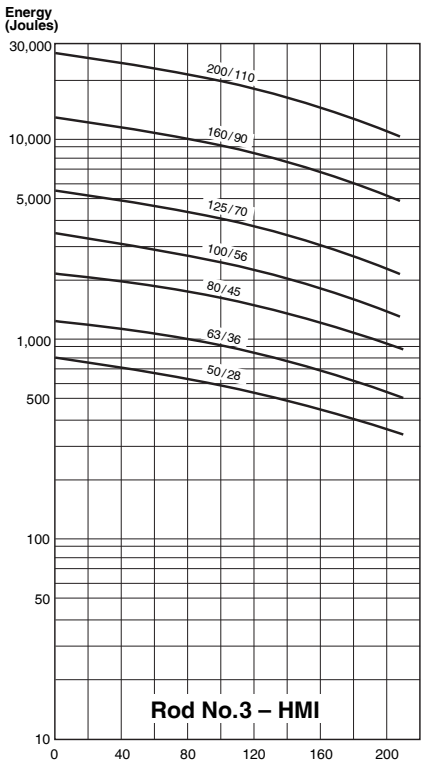

⚠ PROP 65 WARNING **WARNING:** This product can expose you to chemicals including Lead and Lead Compounds which are known to the State of California to cause cancer and birth defects or other reproductive harm. For more information go to www.P65Warnings.ca.gov

Cushion Length, Piston and Rod Mass

Bore Ø	Rod No.	Rod Ø	Cushion Length - ISO				ISO		Piston & Rod Zero Stroke kg	Rod Only per 10mm Stroke kg
			Rod No. 1		Rod No. 2		Rod No. 3			
			Head	Cap	Head	Cap	Head	Cap		
25	1	12	22	20	24	20	–	–	0.12	0.01
	2	18							0.16	0.02
32	1	14	24	20	24	20	–	–	0.23	0.01
	2	22							0.30	0.03
40	1	18	29	29	29	30	–	–	0.44	0.02
	2	28							0.60	0.05
50	1	22	29	29	29	29	29	29	0.70	0.03
	2	36							0.80	0.05
	3	28							0.95	0.08
63	1	28	29	29	29	29	29	29	1.20	0.05
	2	45							1.35	0.08
	3	36							1.60	0.12
80	1	36	35	32	27	32	35	32	2.30	0.08
	2	56							2.50	0.12
	3	45							2.90	0.19
100	1	45	35	32	26	32	29	32	4.00	0.12
	2	70							4.40	0.19
	3	56							5.10	0.30
125	1	56	28	32	27	32	27	32	7.10	0.19
	2	90							8.00	0.30
	3	70							9.40	0.50
160	1	70	34	41	34	41	34	41	13.70	0.30
	2	110							15.30	0.50
	3	90							17.20	0.75
200	1	90	46	56	49	56	50	56	27.00	0.50
	2	140							30.00	0.75
	3	110							34.00	1.23

Pressure Limitations – Introduction

The pressure limitations of a hydraulic cylinder must be reviewed when considering its application. To assist the designer in obtaining the optimum performance from a cylinder, the information which follows highlights the recommended minimum and maximum pressures according to application. If in doubt, please consult the factory.

Minimum Pressure

Due to factors such as seal friction, the minimum operating pressure for HMI cylinders is 5 bar. Below this pressure, low friction seals should be specified. If in doubt, please consult the factory.

Maximum Pressure

HMI cylinders are designed to the mounting dimensions specified in ISO 6020/2 for 160 bar cylinders but, due to the selection of materials, they can be used at higher pressures depending on the application and the choice of rod size and rod end style. As a result, the majority of these cylinders can be operated at 210 bar.

All dimensions are in millimeters unless otherwise state.

Cylinder Body (Pressure Envelope)

In many applications, the pressure developed within a cylinder may be greater than the working pressure, due to pressure intensification across the piston and cushioning. In most cases, this intensification does not affect the cylinder mountings or piston rod threads in the form of increased loading. It may, however, affect the cylinder body and induce fatigue failure or cause premature seal wear. It is important, therefore, that the pressure due to cushioning or intensification does not exceed the 340 bar fatigue limit of the cylinder body. The cushion energy absorption data on the previous page is based on this maximum induced pressure. If in doubt, please consult the factory.

⚠ **PROP 65 WARNING** **WARNING:** This product can expose you to chemicals including Lead and Lead Compounds which are known to the State of California to cause cancer and birth defects or other reproductive harm. For more information go to www.P65Warnings.ca.gov

Standard Ports

Series HMI cylinders are supplied with BSP parallel threaded ports, of a size suitable for normal speed applications – see table opposite. HMI cylinders are also available with a variety of optional ports.

Oversize Ports

For higher speed applications. Series HMI cylinders are available with oversize BSP or metric ports to the sizes shown in the table opposite, or with extra ports in head or cap faces that are not used for mountings or cushion screws. On 25 mm and 32 mm bore cylinders, 20mm high port bosses are necessary to provide the full thread length at the cap end – see rod end dimensions for increased height at the head end. Note that Y and PJ dimensions may vary slightly to accommodate oversize ports – please contact the factory where these dimensions are critical.

Port Size and Piston Speed

One of the factors which influences the speed of a hydraulic cylinder is fluid flow in the connecting lines. Due to piston rod displacement, the flow at the cap end port will be greater than that at the head end, at the same piston speed. Fluid velocity in connecting lines should be limited to 5m/s to minimize fluid turbulence, pressure loss and hydraulic shock. The tables opposite are a guide for use when determining whether cylinder ports are adequate for the application. Data shown gives piston speeds for standard and oversize ports and connecting lines where the velocity of the fluid is 5m/s.

If the desired piston speed results in a fluid flow in excess of 5 m/s in connecting lines, larger lines with two ports per cap should be considered. Hydraulic Actuator Division recommends that a flow rate of 12 m/s in connecting lines should not be exceeded.

Speed Limitations

Where large masses are involved, or piston speeds exceed 0.1m/s and the piston will make a full stroke, cushions are recommended – see cushion information. For cylinders with oversize ports and with a flow exceeding 8m/s into the cap end, a 'non-floating cushion' should be specified. Please consult the factory.

Ports, Air Bleeds and Cushion Adjustment Location

The table below shows standard positions for ports, and cushion adjusting screws where fitted. Air bleeds (see optional features) may be fitted in unoccupied faces of the head or cap, depending on mounting.

Bore Ø	Standard Cylinder Ports				
	Port Size BSP/G Inches	Port Size Metric[1]	Bore of Connecting Lines	Cap End Flow in l/min @ 5m/s	Piston Speed m/s
25	1/4	M14x1.5	7	11.5	0.39
32	1/4	M14x1.5	7	11.5	0.24
40	3/8	M18x1.5	10	23.5	0.31
50	1/2	M22x1.5	13	40	0.34
63	1/2	M22x1.5	13	40	0.21
80	3/4	M27x2	15	53	0.18
100	3/4	M27x2	15	53	0.11
125	1	M33x2	19	85	0.12
160	1	M33x2	19	85	0.07
200	1 1/4	M42x2	24	136	0.07

Bore Ø	Oversize Cylinder Ports (Not to DIN)				
	Port Size BSP/G Inches	Port Size Metric[1]	Bore of Connecting Lines	Cap End Flow in l/min @ 5m/s	Piston Speed m/s
25	3/8[2]	M18x1.5[2,3]	10	23.5	0.80
32	3/8[2]	M18x1.5[2,3]	10	23.5	0.48
40	1/2	M22x1.5[3]	13	40	0.53
50	3/4	M27x2[3]	15	53	0.45
63	3/4	M27x2[3]	15	53	0.28
80[4]	1	M33x2	19	85	0.28
100[4]	1	M33x2	19	85	0.18
125[4]	1 1/4	M42x2	24	136	0.18
160[4]	1 1/4	M42x2	24	136	0.11
200[4]	1 1/2	M48x2	30	212	0.11

[1]Not to DIN 24 554
[2]20mm high port bosses fitted at cap end
[3]ISO 6149 ports are not available on some bore/rod combinations
[4]Consult factory – not normally available on these bore sizes
Not recommended for JJ mountings at pressures above 100 bar

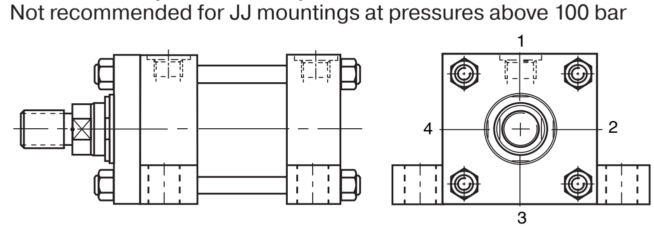

Ports at position 2 or 4 in 25mm to 100mm bore sizes of mounting style C are offset toward position 1 and are not available in the head of 25mm and 32mm bores with number 2 rods. 25mm and 32mm bore heads will not be elongated 5mm toward position 2 or 4 when a port is specified at either of those two locations (the 5mm elongation at position 1 will remain). Contact the factory for the offset dimension.

Positions of Ports and Cushion Screws in Head and Cap		Mounting Styles																																		
		TB, TC and TD				JJ				HH				C[5]			B and BB				SB				D				DB				DD			
Head	Port	1	2	3	4	1	2	3	4	1	2	3	4	1	2	4	1	2	3	4	1	2	3	4	1		3		1	2	3	4	1	2	3	4
	Cushion	2	3	4	1	3	3	1	1	3	4	1	2	2	4	2	2	3	4	1	2	3	4	1	3		1		3	4	1	2	3	4	1	2
Cap	Port	1	2	3	4	1	2	3	4	1	2	3	4	1	2	4	1	2	3	4	1	2	3	4	1	2	3	4	1		3		1	2	3	4
	Cushion	2	3	4	1	3	4	1	2	3	3	1	1	2	4	2	2	3	4	1	2	3	4	1	3	4	1	2	3		1		3	4	1	2

[5]Ports at position 2 or 4 in 25mm to 100mm bores are offset toward position 1.

All dimensions are in millimeters unless otherwise stated.

Cylinder Port Options

Option "T" SAE Straight Thread O-Ring Port. Recommended for most hydraulic applications.

Option "U" Conventional NPTF Ports (Dry-Seal Pipe Threads). Recommended for pneumatic applications only.

Option "R" BSPP Port (British Parallel Thread). ISO 228 port commonly used in Europe. See Figure R-G below.

Option "P" SAE Flange Ports Code 61 (3000 psi). Recommended for hydraulic applications requiring larger port sizes.

Option "B" BSPT (British Tapered Thread).

Option "M" Metric Straight Thread Port similar to Option "R" with metric thread. Popular in some European applications. See Figure R-G below.

Option "Y" ISO-6149-1 Metric Straight Thread Port. Recommended for all hydraulic applications designed per ISO standards. See Figure Y below.

Bore Ø	"T" SAE	"U" NPTF Pipe Thread	"R" BSPP Parallel Thread (Standard)	"P" SAE 4-Bolt Flange Nom. Size	"B" BSPT Taper Thread	"M" Metric Straight Thread	"Y" ISO-6149-1 Metric Straight Thread
25	#6	1/4	1/4	N/A	1/4	M14 x 1.5	M14 x 1.5
32	#6	1/4	1/4	N/A	1/4	M14 x 1.5	M14 x 1.5
40	#6	3/8	3/8	N/A	3/8	M18 x 1.5	M18 x 1.5
50	#10	1/2	1/2	N/A	1/2	M22 x 1.5	M22 x 1.5
63	#10	1/2	1/2	1/2[1, 2]	1/2	M22 x 1.5	M22 x 1.5
80	#12	3/4	3/4	3/4[1]	3/4	M27 x 2	M27 x 2
100	#12	3/4	3/4	3/4	3/4	M27 x 2	M27 x 2
125	#16	1	1	1	1	M33 x 2	M33 x 2
160	#16	1	1	1	1	M33 x 2	M33 x 2
200	#20	1 1/4	1 1/4	1 1/4	1 1/4	M42 x 2	M42 x 2

[1] Due to flange mounting-bolt interference, this port can only be supplied on the cap end of Mounting Styles TC & TD when tie rod nuts are not recessed.
[2] SAE 4-Bolt Flange Port is not available on the head end in 63mm bore with Rod No. 2 (45mm).

BSPP Port for Series HMI

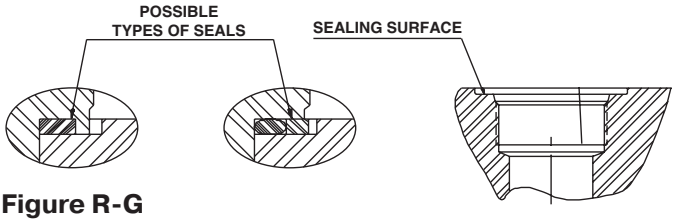

Figure R-G

ISO 6149-1 Port for Series HMI

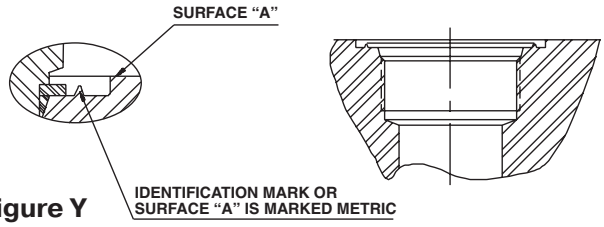

Figure Y

Weights – Series HMI Cylinders

Bore Ø	Rod Ø	Mounting Styles – Weight at Zero Stroke						Weight per 10mm Stroke kg
		TB, TC TD kg	C kg	JJ, HH kg	B,BB, SB kg	D, DB kg	DD kg	
25	12	1.2	1.4	1.5	1.4	1.3	1.5	0.05
	18						1.6	0.06
32	14	1.6	1.9	2.0	1.9	1.7	2.0	0.06
	22	1.7						0.08
40	18	3.7	4.0	4.7	4.2	3.9	4.6	0.09
	28	3.8	4.1	4.8	4.3	4.0	4.7	0.12
50	22	5.9	6.5	7.2	7.0	6.3	7.9	0.14
	28	6.0	6.6	7.3	7.1		8.0	0.16
	36				7.2	6.4		0.18
63	28	8.5	9.7	10.1	10.1	8.9	10.6	0.19
	36	8.6	9.8	10.2	10.2	9.0	10.7	0.22
	45	8.7	9.9	10.3	10.4	9.1	10.9	0.27
80	36	16.0	17.3	18.9	19.5	16.5	20.5	0.27
	45	16.1	17.4	19.0	19.6	16.6		0.32
	56	16.3	17.7	19.2	19.8	16.8	20.7	0.39

Bore Ø	Rod Ø	Mounting Styles – Weight at Zero Stroke						Weight per 10mm Stroke kg
		TB, TC TD kg	C kg	JJ, HH kg	B,BB, SB kg	D, DB kg	DD kg	
100	45	22.0	24.0	25.0	28.0	22.7	26.0	0.40
	56			26.0			27.0	0.47
	70	23.0	25.0		29.0	23.2		0.58
125	56	42.0	44.0	48.0	53.0	43.0	48.0	0.65
	70		45.0		54.0		49.0	0.76
	90	43.0		49.0		44.0	50.0	0.95
160	70	69.0	73.0	78.0	90.0	71.0	84.0	1.00
	90				91.0	72.0	85.0	1.20
	110	70.0	74.0	79.0	92.0			1.40
200	90	122.0	129.0	138.0	157.0	127.0	153.0	1.50
	110	123.0	130.0		158.0	128.0		1.80
	140	124.0	131.0	140.0	160.0	129.0	155.0	2.30

All dimensions are in millimeters unless otherwise stated.

⚠ PROP 65 WARNING **WARNING:** This product can expose you to chemicals including Lead and Lead Compounds which are known to the State of California to cause cancer and birth defects or other reproductive harm. For more information go to www.P65Warnings.ca.gov

Seals and Fluid Data

Group	Seal Materials – a combination	Fluid Medium to ISO 6743/4-1982	Temperature Range
1	**of:** Nitrile (NBR), PTFE,	Mineral oil HH, HL, HLP, HLP-D, HM, HV, MIL-H-5606 oil, nitrogen	-20°C to + 80°C
2	enhanced polyurethane (AU)	Water Glycol (HFC)	-20°C to + 60°C
5	Nitrile, PTFE Fluorocarbon elastomer (FPM) Fluorocarbon, PTFE	Fire resistant fluids based on phosphate esters (HFD-R) Also suitable for hydraulic oil at high temperatures/environments. **Not suitable for use with Skydrol.** See fluid manufacturer's recommendations.	-20°C to + 150°C
6	Nitrile (NBR), PTFE, enhanced polyurethane (AU)	Oil in water emulsion 95/5 (HFA)	+5°C to +55°C

Operating Medium

Sealing materials used in the standard cylinder are suitable for use with most petroleum-based hydraulic fluids.

Special seals are available for use with water-glycol or oil in water emulsions, and with fluids such as fire-resistant synthetic phosphate ester and phosphate ester-based fluids.

If there is any doubt regarding seal compatibility with the operating medium, please consult the factory.

The table above is a guide to the sealing compounds and operating parameters of the materials used for standard and optional rod gland, piston and body seals

Temperature

Standard seals can be operated at temperatures between -20°C and +80°C. Where operating conditions result in temperatures which exceed these limits, special seal compounds may be required to ensure satisfactory service life – please consult the factory.

Special Seals

Group 1 seals are fitted as standard to HMI cylinders. For other duties, optional seal groups 2, 5 & 6 are available – please see the cylinder order code for HMI (ISO) cylinders. Special seals, in addition to those shown in the table above, can also be supplied. Please insert an S (Special) in the order code and specify fluid medium when ordering.

Water Service

Special cylinders are available for use with water as the fluid medium. Modifications include a stainless steel piston rod with lipseal piston, and plating of internal surfaces. When ordering, please specify the maximum operating pressure or load/speed conditions.

Warranty

Hydraulic Actuator Division warrants cylinders modified for use with water or water base fluids to be free of defects in materials and workmanship, but cannot accept responsibility for premature failure caused by corrosion, electrolysis or mineral deposits in the cylinder.

Low Friction Seals

For applications where very low friction and an absence of stick-slip are important, the option of low friction seals is available. Please consult the factory.

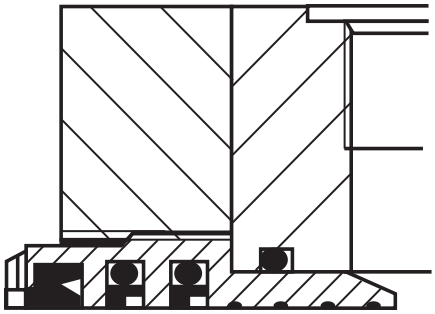

Metallic Rod Wipers

Metallic rod wipers replace the standard wiper seal, and are recommended where dust or splashings might damage the wiper seal material. Metallic rod wipers do not affect cylinder dimensions.

Proximity Sensors

EPS proximity switches can be fitted to give reliable end of stroke signals.

Position Feedback

Linear position transducers of various types are available for Series HMI cylinders. Please contact the factory for further details.

Rod End Bellows

Unprotected piston rod surfaces which are exposed to contaminants with air hardening properties can be protected by rod end bellows. Longer rod extensions are required to accommodate the collapsed length of the bellows. Please consult the factory for further information.

⚠ PROP 65 WARNING **WARNING:** This product can expose you to chemicals including Lead and Lead Compounds which are known to the State of California to cause cancer and birth defects or other reproductive harm. For more information go to www.P65Warnings.ca.gov

Gland Drains

The tendency of hydraulic fluid to adhere to the piston rod can result in an accumulation of fluid in the cavity behind the gland wiperseal under certain operating conditions. This may occur with long stroke cylinders; where there is a constant back pressure as in differential circuitry, or where the ratio of the extend speed to the retract speed is greater than 2 to 1.

A gland drain port is provided in the retainer, except in mounting style JJ, style D in 100mm to 200mm bores, and regardless of mounting style, 25mm bore with all rod numbers, and 32mm to 40mm bores with number 1 rod. In these cases the drain port is located in the head. When the gland drain port in 25mm to 40mm bores is in the head of all mounting styles except JJ, it must be in the same position as the port (on the 5mm elongated side for 25mm & 32mm bores) and when specified in 25mm and 32mm bores of mounting style C it must be in position 1. On JJ mounting styles in 25mm and 32mm bores the drain port can be in position 2 or 4 and is not available in position 3. When the gland drain port is provided in the retainer, the thickness of the retainer is increased by 6mm in 32mm and 40mm bores with number 2 rod and by 4mm in 63mm bore cylinders with number 2 rod. Note that, on style JJ cylinders, drain ports cannot normally be positioned in the same face as ports or cushion valves – please consult the factory.

Gland Drain Port Location & Position Availability

Bore Ø	Rod Ø	Head (H) or Retainer (R) Location / Position			
		TB, TC, TD, HH, B, BB, SB, DB, DD	C	D	JJ
25	All	H / 1, 2, 3, 4	H / 1	H / 1, 3	H / 2, 4
32	14	H / 1, 2, 3, 4	H / 1	H / 1, 3	H / 2, 4
	22	R / 1, 2, 3, 4	R / 1, 2, 3[1], 4	R / 1, 2, 3, 4	H / 2, 4
40	18	H / 1, 2, 3, 4	H / 1	H / 1, 3	H / 2, 3, 4
	28	R / 1, 2, 3, 4	R / 1, 2, 3, 4	R / 1, 2, 3, 4	H / 2, 3, 4
50	All	R / 1, 2, 3, 4	R / 1, 2, 3, 4	R / 1, 2, 3, 4	H / 2, 3, 4
63	All	R / 1, 2, 3, 4	R / 1, 2, 3, 4	R / 1, 2, 3, 4	H / 2, 3, 4
80	All	R / 1, 2, 3, 4	R / 1, 2, 3, 4	R / 1, 2, 3, 4	H / 2, 3, 4
100	All	R / 1, 2, 3, 4	R / 1, 2, 3, 4	H / 1, 3	H / 2, 3, 4
125	All	R / 1, 2, 3, 4	R / 1, 2, 3, 4	H / 1, 3	H / 2, 3, 4
160	All	R / 1, 2, 3, 4	R / 1, 2, 3, 4	H / 1, 3	H / 2, 3, 4
200	All	R / 1, 2, 3, 4	R / 1, 2, 3, 4	H / 1, 3	H / 2, 3, 4

[1] Gland drain is not available in position 3 when key plate is specified.

Gland drain ports will be the same type as the ports specified on the cylinder assembly except for non "JJ" mounts on bore sizes 25, 32, 40 and 50 mm. In these cases they will be 1/8 NPTF.

The size of the gland drain ports are as shown on the adjacent table.

Gland drains should be piped back to the fluid reservoir, which should be located below the level of the cylinder.

Port Type	Port Size
R (BSPP)	1/8 BSPP
T (SAE)	#4 (SAE)
U (Pipe Thread)	1/8 NPTF
M (Metric Straight)	M10 x 1
Y (ISO 6149-1)	M10 x 1
B (BSPT)	1/8 BSPT
P (SAE 4 Bolt Flange)	1/8 BSPP

Air Bleeds

The option of bleed screws is available at either or both ends of the cylinder, at any position except in the port face. The selected positions should be shown in the order code. Cylinders with bore sizes up to 40mm are fitted with M5 bleed screws; for bore sizes of 50mm and above, M8 bleed screws are fitted. Note that, for cylinders of 50mm bore and above, where it is essential to have the air bleed in the port face, bosses can be welded to the cylinder tube. Please contact the factory for details.

Spring-Returned, Single-Acting Cylinders

Series HMI single-acting cylinders can be supplied with an internal spring to return the piston after the pressure stroke. Please supply details of load conditions and friction factors, and advise whether the spring is required to advance or return the piston rod.

On spring-returned cylinders, tie rod extensions will be supplied to allow the spring to be 'backed off' until compression is relieved. Tie rod nuts will be welded to the tie rods at the opposite end of the cylinder, to further assure safe disassembly. Please contact the factory when ordering spring-returned cylinders.

Duplex and Tandem Cylinders

A tandem cylinder is made up of two cylinders mounted in line with pistons connected by a common piston rod and rod seals installed between the cylinders to permit double acting operation of each. Tandem cylinders allow increased output force when mounting width or height are restricted.

A duplex cylinder is made up of two cylinders mounted in line with pistons not connected with rod seals installed between the cylinders to permit double acting operation of each. Cylinders may be mounted with piston rod to piston or back to back and are generally used to provide three position operation.

Stroke Adjusters

Where absolute precision in stroke length is required, a screwed adjustable stop can be supplied. Several types are available – the illustration shows a design suitable for infrequent[2] adjustment at the uncushioned cap end of a cylinder. Please contact the factory, specifying details of the application and the adjustment required.

Bore Ø	D	J	K min	L max
40	M12x1.25	7	75	130
50	M20x1.5	12	75	200
63	M27x2	16	75	230
80	M33x2	20	85	230
100	M42x2	26	70	450
125	M48x2	30	70	500
160	M64x3	40	75	500
200	M80x3	50	80	500

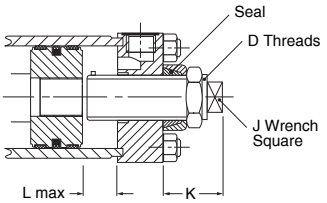

All dimensions are in millimeters unless otherwise stated.

[2] Infrequent is defined by positioning the retract stroke in a couple of attempts at original machine set up. The frequent stroke adjuster is recommended for adjustments required after the original equipment has been adjusted by the original machine manufacturer.

Safety Guide for Selecting and Using Hydraulic, Pneumatic Cylinders and Their Accessories

WARNING: ⚠ FAILURE OF THE CYLINDER, ITS PARTS, ITS MOUNTING, ITS CONNECTIONS TO OTHER OBJECTS, OR ITS CONTROLS CAN RESULT IN:

- **Unanticipated or uncontrolled movement of the cylinder or objects connected to it.**
- **Falling of the cylinder or objects held up by it.**
- **Fluid escaping from the cylinder, potentially at high velocity.**

THESE EVENTS COULD CAUSE DEATH OR PERSONAL INJURY BY, FOR EXAMPLE, PERSONS FALLING FROM HIGH LOCATIONS, BEING CRUSHED OR STRUCK BY HEAVY OR FAST MOVING OBJECTS, BEING PUSHED INTO DANGEROUS EQUIPMENT OR SITUATIONS, OR SLIPPING ON ESCAPED FLUID.

Before selecting or using Parker Hannifin Corporation (the Company) cylinders or related accessories, it is important that you read, understand and follow the following safety information. Training is advised before selecting and using the Company's products.

1.0 General Instructions

1.1 Scope – This safety guide provides instructions for selecting and using (including assembling, installing, and maintaining) cylinder products. This safety guide is a supplement to and is to be used with the specific Company publications for the specific cylinder products that are being considered for use.

1.2 Fail Safe – Cylinder products can and do fail without warning for many reasons. All systems and equipment should be designed in a fail-safe mode so that if the failure of a cylinder product occurs people and property won't be endangered.

1.3 Distribution – Provide a free copy of this safety guide to each person responsible for selecting or using cylinder products. Do not select or use the Company's cylinders without thoroughly reading and understanding this safety guide as well as the specific Company publications for the products considered or selected.

1.4 User Responsibility – Due to very wide variety of cylinder applications and cylinder operating conditions, the Company does not warrant that any particular cylinder is suitable for any specific application. This safety guide does not analyze all technical parameters that must be considered in selecting a product. The hydraulic and pneumatic cylinders outlined in this catalog are designed to the Company's design guidelines and do not necessarily meet the design guideline of other agencies such as American Bureau of Shipping, ASME Pressure Vessel Code etc. The user, through its own
analysis and testing, is solely responsible for:

- Making the final selection of the cylinders and related accessories.
- Determining if the cylinders are required to meet specific design requirements as required by the Agency(s) or industry standards covering the design of the user's equipment.
- Assuring that the user's requirements are met, OSHA requirements are met, and safety guidelines from the applicable agencies such as but not limited to ANSI are followed and that the use presents no health or safety hazards.
- Providing all appropriate health and safety warnings on the equipment on which the cylinders are used.

1.5 Additional Questions – Call the appropriate Company technical service department if you have any questions or require any additional information. See the Company publication for the product being considered or used, or call 1-847-298-2400, or go to www.parker.com, for telephone numbers of the appropriate technical service department.

2.0 Cylinder and Accessories Selection

2.1 Seals – Part of the process of selecting a cylinder is the selection of seal compounds. Before making this selection, consult the "seal information page(s)" of the publication for the series of cylinders of interest.

The application of cylinders may allow fluids such as cutting fluids, wash down fluids etc. to come in contact with the external area of the cylinder. These fluids may attack the piston rod wiper and or the primary seal and must be taken into account when selecting and specifying seal compounds.

Dynamic seals will wear. The rate of wear will depend on many operating factors. Wear can be rapid if a cylinder is mis-aligned or if the cylinder has been improperly serviced. The user must take seal wear into consideration in the application of cylinders.

2.2 Piston Rods – Possible consequences of piston rod failure or separation of the piston rod from the piston include, but are not limited to are:

- Piston rod and or attached load thrown off at high speed.
- High velocity fluid discharge.
- Piston rod extending when pressure is applied in the piston retract mode.

Piston rods or machine members attached to the piston rod may move suddenly and without warning as a consequence of other conditions occurring to the machine such as, but not limited to:

- Unexpected detachment of the machine member from the piston rod.
- Failure of the pressurized fluid delivery system (hoses, fittings, valves, pumps, compressors) which maintain cylinder position.
- Catastrophic cylinder seal failure leading to sudden loss of pressurized fluid.
- Failure of the machine control system.

Follow the recommendations of the "Piston Rod Selection Chart and Data" in the publication for the series of cylinders of interest. The suggested piston rod diameter in these charts must be followed in order to avoid piston rod buckling.

Piston rods are not normally designed to absorb bending moments or loads which are perpendicular to the axis of piston rod motion. These additional loads can cause the piston rod to fail. If these types of additional loads are expected to be imposed on the piston rod, their magnitude should be made known to our engineering department.

The cylinder user should always make sure that the piston rod is securely attached to the machine member.

On occasion cylinders are ordered with double rods (a piston rod extended from both ends of the cylinder). In some cases a stop is threaded on to one of the piston rods and used as an external stroke adjuster. On occasions spacers are attached to the machine member connected to the piston rod and also used as a stroke adjuster. In both cases the stops will create a pinch point and the user should consider appropriate use of guards. If these
external stops are not perpendicular to the mating contact surface, or if debris is trapped between the contact surfaces, a bending moment will be placed on the piston rod, which can lead to piston rod failure. An external stop will also negate the effect of cushioning and will subject the piston rod to impact loading. Those two (2) conditions can cause piston rod failure. Internal stroke adjusters are available with and without cushions. The use of external stroke adjusters should be reviewed with our engineering department.

The piston rod to piston and the stud to piston rod threaded connections are secured with an anaerobic adhesive. The strength of the adhesive decreases with increasing temperature. Cylinders which can be exposed to temperatures above +250˚F (+121˚C) are to be ordered with a non studded piston rod and a pinned piston to rod joint.

2.3 Cushions – Cushions should be considered for cylinder applications when the piston velocity is expected to be over 4 inches/second.

Cylinder cushions are normally designed to absorb the energy of a linear applied load. A rotating mass has considerably more energy than the same mass moving in a linear mode. Cushioning for a rotating mass application should be reviewed by our engineering department.

2.4 Cylinder Mountings – Some cylinder mounting configurations may have certain limitations such as but not limited to minimum stroke for side or foot mounting cylinders or pressure de-ratings for certain mounts. Carefully review the catalog for these types of restrictions.

Always mount cylinders using the largest possible high tensile alloy steel socket head cap screws that can fit in the cylinder mounting holes and torque them to the manufacturer's recommendations for their size.

2.5 Port Fittings – Hydraulic cylinders applied with meter out or deceleration circuits are subject to intensified pressure at piston rod end.

The rod end pressure is approximately equal to:

$$\frac{\text{operating pressure x effective cap end area}}{\text{effective rod end piston area}}$$

Contact your connector supplier for the pressure rating of individual connectors.

3.0 Cylinder and Accessories Installation and Mounting

3.1 Installation

3.1.1 – Cleanliness is an important consideration, and cylinders are shipped with the ports plugged to protect them from contaminants entering the ports. These plugs should not be removed until the piping is to be installed. Before making the connection to the cylinder ports, piping should be thoroughly cleaned to remove all chips or burrs which might have resulted from threading or flaring operations.

3.1.2 – Cylinders operating in an environment where air drying materials are present such as fast-drying chemicals, paint, or weld splatter, or other hazardous conditions such as excessive heat, should have shields installed to prevent damage to the piston rod and piston rod seals.

3.1.3 – Proper alignment of the cylinder piston rod and its mating component on the machine should be checked in both the extended and retracted positions. Improper alignment will result in excessive rod gland and/or cylinder bore wear. On fixed mounting cylinders attaching the piston rod while the rod is retracted will help in achieving proper alignment.

3.1.4 – Sometimes it may be necessary to rotate the piston rod in order to thread the piston rod into the machine member. This operation must always be done with zero pressure being applied to either side of the piston. Failure to follow this procedure may result in loosening the piston to rod-threaded connection. In some rare cases the turning of the piston rod may rotate a threaded piston rod gland and loosen it from the
cylinder head. Confirm that this condition is not occurring. If it does, re-tighten the piston rod gland firmly against the cylinder head.

For double rod cylinders it is also important that when attaching or detaching the piston rod from the machine member that the torque be applied to the piston rod end of the cylinder that is directly attaching to the machine member with the opposite end unrestrained. If the design of the machine is such that only the rod end of the cylinder opposite to where the rod attaches to the machine member can be rotated, consult the factory for further instructions.

3.2 Mounting Recommendations

3.2.1 – Always mount cylinders using the largest possible high tensile alloy steel socket head screws that can fit in the cylinder mounting holes and torque them to the manufacturer's recommendations for their size.

3.2.2 – Side-Mounted Cylinders – In addition to the mounting bolts, cylinders of this type should be equipped with thrust keys or dowel pins located so as to resist the major load.

3.2.3 – Tie Rod Mounting – Cylinders with tie rod mountings are recommended for applications where mounting space is limited. The standard tie rod extension is shown as BB in dimension tables. Longer or shorter extensions can be supplied. Nuts used for this mounting style should be torqued to the same value as the tie rods for that bore size.

3.2.4 – Flange Mount Cylinders – The controlled diameter of the rod gland extension on head end flange mount cylinders can be used as a pilot to locate the cylinders in relation to the machine. After alignment has been obtained, the flanges may be drilled for pins or dowels to prevent shifting.

3.2.5 – Trunnion Mountings – Cylinders require lubricated bearing blocks with minimum bearing clearances. Bearing blocks should be carefully aligned and rigidly mounted so the trunnions will not be subjected to bending moments. The rod end should also be pivoted with the pivot pin in line and parallel to axis of the trunnion pins.

3.2.6 – Clevis Mountings – Cylinders should be pivoted at both ends with centerline of pins parallel to each other. After cylinder is mounted, be sure to check to assure that the cylinder is free to swing through its working arc without interference from other machine parts.

4.0 Cylinder and Accessories Maintenance, Troubleshooting and Replacement

4.1 Storage – At times cylinders are delivered before a customer is ready to install them and must be stored for a period of time. When storage is required the following procedures are recommended.

4.1.1 – Store the cylinders in an indoor area which has a dry, clean and noncorrosive atmosphere. Take care to protect the cylinder from both internal corrosion and external damage.

4.1.2 – Whenever possible cylinders should be stored in a vertical position (piston rod up). This will minimize corrosion due to possible condensation which could occur inside the cylinder. This will also minimize seal damage.

4.1.3 – Port protector plugs should be left in the cylinder until the time of installation.

4.1.4 – If a cylinder is stored full of hydraulic fluid, expansion of the fluid due to temperature changes must be considered. Installing a check valve with free flow out of the cylinder is one method.

4.1.5 – When cylinders are mounted on equipment that is stored outside for extended periods, exposed unpainted surfaces, e.g. piston rod, must be coated with a rust-inhibiting compound to prevent corrosion.

4.2 Cylinder Trouble Shooting

4.2.1 – **External Leakage**

4.2.1.1 – Rod seal leakage can generally be traced to worn or damaged seals. Examine the piston rod for dents, gouges or score marks, and replace piston rod if surface is rough.

Rod seal leakage could also be traced to gland wear. If clearance is excessive, replace rod bushing and seal. Rod seal leakage can also be traced to seal deterioration. If seals are soft or gummy or brittle, check compatibility of seal material with lubricant used if air cylinder, or operating fluid if hydraulic cylinder. Replace with seal material, which is compatible with these fluids. If the seals are hard or have lost elasticity, it is usually due to exposure to temperatures in excess of 165°F. (+74°C). Shield the cylinder from the heat source to limit temperature to 350°F. (+177°C.) and replace with fluorocarbon seals.

4.2.1.2 – Cylinder body seal leak can generally be traced to loose tie rods. Torque the tie rods to manufacturer's recommendation for that bore size.

Excessive pressure can also result in cylinder body seal leak. Determine maximum pressure to rated limits. Replace seals and retorque tie rods as in paragraph above. Excessive pressure can also result in cylinder body seal leak. Determine if the pressure rating of the cylinder has been exceeded. If so, bring the operating pressure down to the rating of the cylinder and have the tie rods replaced.

Pinched or extruded cylinder body seal will also result in a leak. Replace cylinder body seal and retorque as in paragraph above.

Cylinder body seal leakage due to loss of radial squeeze which shows up in the form of flat spots or due to wear on the O.D. or I.D. – Either of these are symptoms of normal wear due to high cycle rate or length of service. Replace seals as per paragraph above.

4.2.2 – **Internal Leakage**

4.2.2.1 – Piston seal leak (by-pass) 1 to 3 cubic inches per minute leakage is considered normal for piston ring construction. Virtually no static leak with lipseal type seals on piston should be expected. Piston seal wear is a usual cause of piston seal leakage. Replace seals as required.

4.2.2.2 – With lipseal type piston seals excessive back pressure due to over-adjustment of speed control valves could be a direct cause of rapid seal wear. Contamination in a hydraulic system can result in a scored cylinder bore, resulting in rapid seal wear. In either case, replace piston seals as required.

4.2.2.3 – What appears to be piston seal leak, evidenced by the fact that the cylinder drifts, is not always traceable to the piston. To make sure, it is suggested that one side of the cylinder piston be pressurized and the fluid line at the opposite port be disconnected. Observe leakage. If none is evident, seek the cause of cylinder drift in other component parts in the circuit.

4.2.3 – **Cylinder Fails to Move the Load**

4.2.3.1 – Pneumatic or hydraulic pressure is too low. Check the pressure at the cylinder to make sure it is to circuit requirements.

4.2.3.2 – Piston Seal Leak – Operate the valve to cycle the cylinder and observe fluid flow at valve exhaust ports at end of cylinder stroke. Replace piston seals if flow is excessive.

4.2.3.3 – Cylinder is undersized for the load – Replace cylinder with one of a larger bore size.

4.3 Erratic or Chatter Operation

4.3.1 – Excessive friction at rod gland or piston bearing due to load misalignment – Correct cylinder-to-load alignment.

4.3.2 – Cylinder sized too close to load requirements – Reduce load or install larger cylinder.

4.3.3 – Erratic operation could be traced to the difference between static and kinetic friction. Install speed control valves to provide a back pressure to control the stroke.

4.4 Cylinder Modifications, Repairs, or Failed Component – Cylinders as shipped from the factory are not to be disassembled and or modified. If cylinders require modifications, these modifications must be done at company locations or by the Company's certified facilities. The Hydraulic Actuator Division Engineering Department must be notified in the event of a mechanical fracture or permanent deformation of any cylinder component (excluding seals). This includes a broken piston rod, tie rod, mounting accessory or any other cylinder component. The notification should include all operation and application details. This information will be used to provide an engineered repair that will prevent recurrence of the failure.

It is allowed to disassemble cylinders for the purpose of replacing seals or seal assemblies. However, this work must be done by strictly following all the instructions provided with the seal kits.

The items described in this document and other documents and descriptions provided by Parker Hannifin Corporation, its subsidiaries and its authorized distributors ("Seller") are hereby offered for sale at prices to be established by Seller. This offer and its acceptance by any customer ("Buyer") shall be governed by all of the following Terms and Conditions. Buyer's order for any item described in its document, when communicated to Seller verbally, or in writing, shall constitute acceptance of this offer. All goods, services or work described will be referred to as "Products".

1. Terms. All sales of Products by Seller will be governed by, and are expressly conditioned upon Buyer's assent to, these Terms. These Terms are incorporated into any Quote provided by Seller to Buyer. Buyer's order for any Products whether communicated to Seller verbally, in writing, by electronic data interface or other electronic commerce, shall constitute acceptance of these Terms. Seller objects to any contrary or additional terms or conditions of Buyer. Reference in Seller's order acknowledgement to Buyer's purchase order or purchase order number shall in no way constitute an acceptance of any of Buyer's terms or conditions of purchase. Any Quote made by Seller to Buyer shall be considered a firm and definite offer and shall not be deemed to be otherwise despite any language on the face of the Quote. Seller reserves all rights to accept or reject any purported acceptance by Buyer to Seller's Quote if such purported acceptance attempts to vary the terms of the Quote. If Seller ships Products after Buyer issues an acceptance to the Quote, any additional or different terms proposed by Buyer will not become part of the parties' business relationship unless agreed to in a writing that is signed by an authorized representative of Seller, excluding email correspondence. If the transaction proceeds without such agreement on the part of Seller, the business relationship will be governed solely by these Terms and the specific terms in Seller's Quote.

2. Price; Payment. The Products set forth in the Quote are offered for sale at the prices indicated in the Quote. Unless otherwise specifically stated in the Quote, prices are valid for thirty (30) days and do not include any sales, use, or other taxes or duties. Seller reserves the right to modify prices for any reason and at any time by giving ten (10) days prior written notice. Unless otherwise specified by Seller, all prices are F.C.A. Seller's facility (INCOTERMS 2020). All sales are contingent upon credit approval and full payment for all purchases is due thirty (30) days from the date of invoice (or such date as may be specified in the Quote). Under any circumstances, Buyer may not withhold or suspend payment of any amounts due and payable as a deduction, set-off or recoupment of any amount, claim or dispute with Seller. Unpaid invoices beyond the specified payment date incur interest at the rate of 1.5% per month or the maximum allowable rate under applicable law. Seller reserves the right to require advance payment or provision of securities for first and subsequent deliveries if there is any doubt, in Seller's sole determination, regarding the Buyer's creditworthiness or for other business reasons. If the requested advance payment or securities are not provided to Seller's satisfaction, Seller reserves the right to suspend performance or reject the purchase order, in whole or in part, without prejudice to Seller's other rights or remedies, including the right to full compensation. Seller may revoke or shorten any payment periods previously granted in Seller's sole determination. The rights and remedies herein reserved to Seller are cumulative and in addition to any other or further rights and remedies available at law or in equity. No waiver by Seller of any breach by Buyer of any provision of these terms will constitute a waiver by Seller of any other breach of such provision.

3. Shipment; Delivery; Title and Risk of Loss. All delivery dates are approximate, and Seller is not responsible for damages or additional costs resulting from any delay. All deliveries are subject to our ability to procure materials from our suppliers. Regardless of the manner of shipment, delivery occurs and title and risk of loss or damage pass to Buyer, upon placement of the Products with the carrier at Seller's facility. Unless otherwise agreed prior to shipment and for domestic delivery locations only, Seller will select and arrange, at Buyer's sole expense, the carrier and means of delivery. When Seller selects and arranges the carrier and means of delivery, freight and insurance costs for shipment to the designated delivery location will be prepaid by Seller and added as a separate line item to the invoice. Buyer shall be responsible for any additional shipping charges incurred by Seller due to Buyer's acts or omissions. Buyer shall not return or repackage any Products without the prior written authorization from Seller, and any return shall be at the sole cost and expense of Buyer.

4. Warranty. The warranty for the Products is as follows: (i) Goods are warranted against defects in material or workmanship for a period of eighteen (18) months from the date of delivery or 2,000 hours of use, whichever occurs first; (ii) Services shall be performed in accordance with generally accepted practices and using the degree of care and skill that is ordinarily exercised and customary in the field to which the Services pertain and are warranted for a period of six (6) months from the date of completion of the Services; and (iii) Software is only warranted to perform in accordance with applicable specifications provided by Seller to Buyer for ninety (90) days from the date of delivery or, when downloaded by a Buyer or end-user, from the date of the initial download. All prices are based upon the exclusive limited warranty stated above, and upon the following disclaimer: **EXEMPTION CLAUSE; DISCLAIMER OF WARRANTY, CONDITIONS, REPRESENTATIONS: THIS WARRANTY IS THE SOLE AND ENTIRE WARRANTY, CONDITION, AND REPRESENTATION, PERTAINING TO PRODUCTS. SELLER DISCLAIMS ALL OTHER WARRANTIES, CONDITIONS, AND REPRESENTATIONS, WHETHER STATUTORY, EXPRESS OR IMPLIED, INCLUDING BUT NOT LIMITED TO THOSE RELATING TO DESIGN, NONINFRINGEMENT, MERCHANTABILITY, AND FITNESS FOR A PARTICULAR PURPOSE. SELLER DOES NOT WARRANT THAT THE SOFTWARE IS ERROR-FREE OR FAULT-TOLERANT, OR THAT BUYER'S USE THEREOF WILL BE SECURE OR UNINTERRUPTED, UNLESS OTHERWISE AUTHORIZED IN WRITING BY SELLER, THE SOFTWARE SHALL NOT BE USED IN CONNECTION WITH HAZARDOUS OR HIGH-RISK ACTIVITIES OR ENVIRONMENTS. EXCEPT AS EXPRESSLY STATED HEREIN, ALL PRODUCTS ARE PROVIDED "AS IS".**

5. Claims; Commencement of Actions. Buyer shall promptly inspect all Products upon receipt. No claims for shortages will be allowed unless reported to Seller within ten (10) days of delivery. Buyer shall notify Seller of any alleged breach of warranty within thirty (30) days after the date the non-conformance is or should have been discovered by Buyer. Any claim or action against Seller based upon breach of contract or any other theory, including tort, negligence, or otherwise must be commenced within twelve (12) months from the date of the alleged breach or other alleged event, without regard to the date of discovery.

6. LIMITATION OF LIABILITY. IN THE EVENT OF A BREACH OF WARRANTY, SELLER WILL, AT ITS OPTION, REPAIR OR REPLACE THE NON-CONFORMING PRODUCTS, RE-PERFORM THE SERVICES, OR REFUND THE PURCHASE PRICE PAID WITHIN A REASONABLE PERIOD OF TIME. IN NO EVENT IS SELLER LIABLE FOR ANY SPECIAL, INDIRECT, INCIDENTAL OR CONSEQUENTIAL DAMAGES INCLUDING ANY LOSS OF REVENUE OR PROFITS, WHETHER BASED IN CONTRACT, TORT OR OTHER LEGAL THEORY. IN NO EVENT SHALL SELLER'S LIABILITY UNDER ANY CLAIM MADE BY BUYER EXCEED THE PURCHASE PRICE PAID FOR THE PRODUCTS.

7. Confidential Information. Buyer acknowledges and agrees that Confidential Information has been and will be received in confidence and will remain the property of Seller. Buyer further agrees that it will not use Seller's Confidential Information for any purpose other than for the benefit of Seller and shall return all such Confidential Information to Seller within thirty (30) days upon request.

8. Loss to Buyer's Property. Buyer's Property will be considered obsolete and may be destroyed by Seller after two (2) consecutive years have elapsed without Buyer ordering the Products manufactured using Buyer's Property. Also, Seller shall not be responsible for any loss or damage to Buyer's Property while it is in Seller's possession or control.

9. Special Tooling. Seller may impose a tooling charge for any Special Tooling. Special Tooling shall be and remain Seller's property. In no event will Buyer acquire any interest in the Special Tooling, even if such Special Tooling has been specially converted or adapted for manufacture of Goods for Buyer and notwithstanding any charges paid by Buyer. Unless otherwise agreed, Seller has the right to alter, discard or otherwise dispose of any Special Tooling or other property owned by Seller in its sole determination at any time.

10. Security Interest. To secure payment of all sums due from Buyer, Seller retains a security interest in all Products delivered to Buyer and, Buyer's acceptance of these Terms is deemed to be a Security Agreement under the Uniform Commercial Code. Buyer authorizes Seller as its attorney to execute and file on Buyer's behalf all documents Seller deems necessary to perfect Seller's security interest.

11. User Responsibility. Buyer, through its own analysis and testing, is solely responsible for making the final selection of the Products and assuring that all performance, endurance, maintenance, safety and warning requirements of the application of the Products are met. Buyer must analyze all aspects of the application and follow applicable industry standards, specifications, and any technical information provided with the Quote or the Products, such as Seller's instructions, guides and specifications. If Seller provides options of or for Products based upon data or specifications provided by Buyer, Buyer is responsible for determining that such data and specifications are suitable and sufficient for all applications and reasonably foreseeable uses of the Products. In the event Buyer is not the end-user of the Products, Buyer will ensure such end-user complies with this paragraph.

12. Use of Products, Indemnity by Buyer. Buyer shall comply with all instructions, guides and specifications provided by Seller with the Quote or the Products. If Buyer uses or resells the Products in any way prohibited by Seller's instructions, guides or specifications, or Buyer otherwise fails to comply with Seller's instructions, guides and specifications, Buyer acknowledges that any such use, resale, or non-compliance is at Buyer's sole risk. Further, Buyer shall indemnify, defend, and hold Seller harmless from any losses, claims, liabilities, damages, lawsuits, judgments and costs (including attorney fees and defense costs), whether for personal injury, property damage, intellectual property infringement or any other claim, arising out of or in connection with: (a) improper selection, design, specification, application, or any misuse of Products; (b) any act or omission, negligent or otherwise, of Buyer; (c) Seller's use of Buyer's Property; (d) damage to the Products from an external cause, repair or attempted repair by anyone other than Seller, failure to follow instructions, guides and specifications provided by Seller, use with goods not provided by Seller, or opening, modifying, deconstructing, tampering with or repackaging the Products; or (e) Buyer's failure to comply with these Terms, including any legal or administrative proceedings, collection efforts, or other actions arising from or relating to such failure to comply. Seller shall not indemnify Buyer under any circumstance except as otherwise provided in these Terms.

13. Cancellations and Changes. Buyer may not cancel or modify, including but not limited to movement of delivery dates for the Products, any order for any reason except with Seller's written consent and upon terms that will indemnify, defend and hold Seller harmless against all direct, incidental and consequential loss or damage and any additional expense. Seller, at any time, may change features, specifications, designs and availability of Products.

14. Assignment. Buyer may not assign its rights or obligations without the prior written consent of Seller.

15. Force Majeure. Seller is not liable for delay or failure to perform any of its obligations by reason of any events or circumstances beyond its reasonable control. Such circumstances include without limitation: accidents, labor disputes or stoppages, government acts or orders, acts of nature, pandemics, epidemics, other widespread illness, or public health emergency, cyber related disruptions, cyber-attacks, ransomware sabotage, delays or failures in delivery from carriers or suppliers, shortages of materials, sudden increases in the price of raw material or components, shutdowns or slowdowns affecting the supply of raw materials or components, or the transportation thereof, oil shortages or oil price increases, energy crisis, energy or fuel interruption, war (whether declared or not) or the serious threat of same, riots, rebellions, acts of terrorism, embargoes, fire or any reason whether similar to the foregoing or otherwise. Seller will resume performance as soon as practicable after the event of force majeure has been removed. All delivery dates affected by an event of force majeure shall be tolled for the duration of such event of force majeure and rescheduled for mutually agreed dates as soon as practicable after the event of force majeure ceases to exist. The right to allocate capacity is in the Seller's sole discretion. An event of force majeure shall not include financial distress, insolvency, bankruptcy, or other similar conditions affecting one of the parties, affiliates and/or sub¬contractors. An event of force majeure in the meaning of these Terms means any circumstances beyond Seller's control that permanently or temporarily hinders performance, even where that circumstance was already foreseen. Buyer shall not be entitled to cancel any orders following its claim of an event of force majeure.

16. Waiver and Severability. Failure to enforce any provision of these Terms will not invalidate that provision; nor will any such failure prejudice either party's right to enforce that provision in the future. Invalidation of any provision of these Terms shall not invalidate any other provision herein and, the remaining provisions will remain in full force and effect.

17. Duration. Unless otherwise stated in the Quote, any agreement governed by or arising from these Terms shall: (a) be for an initial duration of one (1) year; and (b) shall automatically renew for successive one-year terms unless terminated by Buyer with at least 180-days written notice to Seller or if Seller terminates the agreement pursuant to Section 19 of these Terms.

18. Termination. Seller may, without liability to Buyer, terminate any agreement governed by or arising from these Terms for any reason and at any time by giving Buyer thirty (30) days prior written notice. Seller may immediately terminate, in writing, if Buyer: (a) breaches any provision of these Terms, (b) becomes or is deemed insolvent, (c) appoints or has appointed a trustee, receiver or custodian for all or any part of Buyer's property,(d) files a petition for relief in bankruptcy on its own behalf, or one is filed against Buyer by a third party, (e) makes an assignment for the benefit of creditors; or (f) dissolves its business or liquidates all or a majority of its assets.

19. Ownership of Rights. Buyer agrees that (a) Seller (and/or its affiliates) owns or is the valid licensee of Seller's IP and (b) the furnishing of information, related documents or other materials by Seller to Buyer does not grant or transfer any ownership interest or license in or to Seller's IP to Buyer, unless expressly agreed in writing. Without limiting the foregoing, Seller retains ownership of all Software supplied to Buyer. In no event shall Buyer obtain any greater right in and to the Software than a right in a license limited to the use thereof and subject to compliance with any other terms provided with the Software. Buyer further agrees that it will not, directly or through intermediaries, reverse engineer, decompile, or disassemble any Software (including firmware) comprising or contained within a Product, except and only to the extent that such activity may be expressly permitted, either by applicable law or, in the case of open source software, the applicable open source license.

20. Indemnity for Infringement of Intellectual Property Rights. Seller is not liable for infringement of any Intellectual Property Rights except as provided in this Section. Seller will defend at its expense and will pay the cost of any settlement or damages awarded in an action brought against Buyer based on a third-party claim that one or more of the Products infringes the Intellectual Property Rights of a third party in the country of delivery of the Products by Seller to Buyer. Seller's obligation to defend and indemnify Buyer is contingent on Buyer notifying Seller within ten (10) days after Buyer becomes aware of any such claim, and Seller having sole control over the defense of the claim including all negotiations for settlement or compromise. If one or more Products is subject to such a claim, Seller may, at its sole expense and option, procure for Buyer the right to continue using the Products, replace or modify the Products to render them non-infringing, or offer to accept return of the Products and refund the purchase price less a reasonable allowance for depreciation. Seller has no obligation or liability for any claim of infringement: (i) arising from information provided by Buyer (including Seller's use of Buyer's Property); or (ii) directed to any Products for which the designs are specified in whole or part by Buyer; or (iii) resulting from the modification, combination or use in a system of any Products. The foregoing provisions of this Section constitute Seller's sole and exclusive liability and Buyer's sole and exclusive remedy for claims of infringement of Intellectual Property Rights.

21. Governing Law. These Terms, the terms of any Quote, and the sale and delivery of all Products are deemed to have taken place in, and shall be governed and construed in accordance with, the laws of the State of Ohio, as applicable to contracts executed and wholly performed therein and without regard to conflicts of laws principles. Buyer irrevocably agrees and consents to the exclusive jurisdiction and venue of the courts of Cuyahoga County, Ohio with respect to any dispute, controversy or claim arising out of or relating to the sale and delivery of the Products.

22. Entire Agreement. These Terms, along with the terms set forth in the Quote, forms the entire agreement between the Buyer and Seller and constitutes the final, complete and exclusive expression of the terms of sale and purchase. In the event of a conflict between any term set forth in the Quote and these Terms, the terms set forth in the Quote shall prevail. All prior or contemporaneous written or oral agreements or negotiations with respect to the subject matter shall have no effect. No modification to these Terms will be binding on Seller unless agreed to in a writing that is signed by an authorized representative of Seller, excluding email correspondence, 'clickwrap' or other purported electronic assent to different or additional terms. Sections 2-25 of these Terms shall survive termination or cancellation of any agreement governed by or arising from these Terms.

23. No 'Wrap' Agreements/No Authority to Bind. Seller's clicking any buttons or any similar action, such as clicking "I Agree" or "Confirm," to utilize Buyer's software or webpage for the placement of orders, is NOT an agreement to Buyer's Terms and Conditions. NO EMPLOYEE, AGENT OR REPRESENTATIVE OF SELLER HAS THE AUTHORITY TO BIND SELLER BY THE ACT OF CLICKING ANY BUTTON OR SIMILAR ACTION ON BUYER'S WEBSITE OR PORTAL.

24. Compliance with Laws. Buyer agrees to comply with all applicable laws, regulations, and industry and professional standards, including those of the United States of America, and the country or countries in which Buyer may operate, including without limitation the U.S. Foreign Corrupt Practices Act ("FCPA"), the U.S. Anti-Kickback Act ("Anti-Kickback Act"), U.S. and E.U. export control and sanctions laws ("Export Laws"), the U.S. Food Drug and Cosmetic Act ("FDCA"), and the rules and regulations promulgated by the U.S. Food and Drug Administration ("FDA"), each as currently amended. Buyer agrees to indemnify, defend, and hold harmless Seller from the consequences of any violation of such laws, regulations and standards by Buyer, its employees or agents. Buyer represents that it is familiar with all applicable provisions of the FCPA, the Anti-Kickback Act, Export Laws, the FDCA and the FDA and certifies that Buyer will adhere to the requirements thereof and not take any action that would make Seller violate such requirements. Buyer represents and agrees that Buyer will not make any payment or give anything of value, directly or indirectly, to any governmental official, foreign political party or official thereof, candidate for foreign political office, or commercial entity or person, for any improper purpose, including the purpose of influencing such person to purchase Products or otherwise benefit the business of Seller. Buyer further represents and agrees that it will not receive, use, service, transfer or ship any Products from Seller in a manner or for a purpose that violates Export Laws or would cause Seller to be in violation of Export Laws. Buyer agrees to promptly and reliably provide Seller all requested information or documents, including end-user statements and other written assurances, concerning Buyer's ongoing compliance with Export Law. 9/22

9/26 / Catalog HY08-SB1151

Parker Hannifin Corporation
Schrader Bellows
Hydraulic Actuator Division
500 South Wolf Road
Des Plaines, IL 60016
phone (847) 298-2400
www.parker.com/cylinder

Authorized Distributor
MONILEK OILFIELD

E: sales@monilek.com
W: www.monilekgroup.com