Authorized Distributor
MONILEK OILFIELD

E: sales@monilek.com
W: www.monilekgroup.com

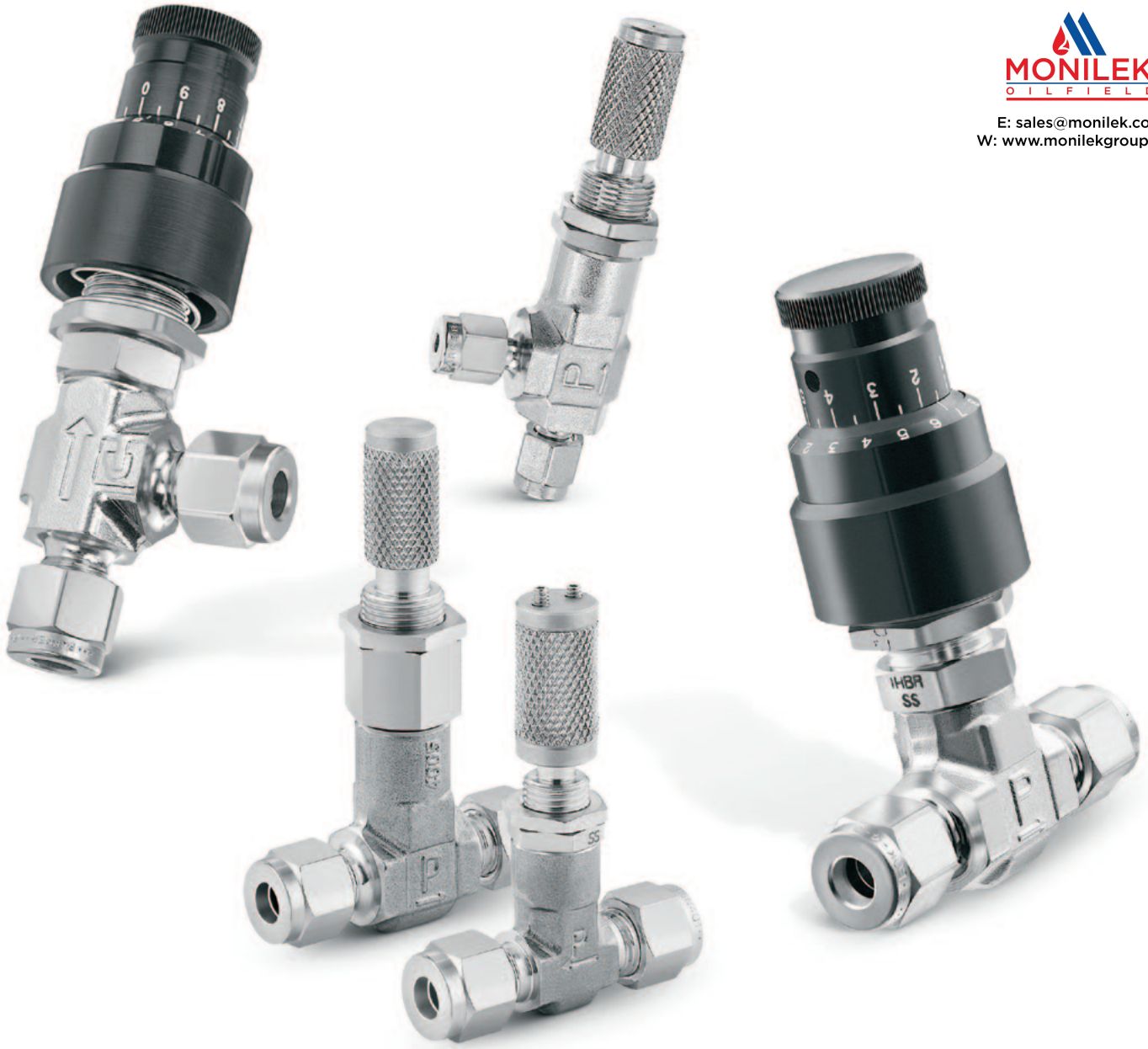

Metering Valves

Catalog 4170-MV

June 2011

aerospace
climate control
electromechanical
filtration
fluid & gas handling
hydraulics
pneumatics
process control
sealing & shielding

ENGINEERING YOUR SUCCESS.

⚠ WARNING – USER RESPONSIBILITY

FAILURE OR IMPROPER SELECTION OR IMPROPER USE OF THE PRODUCTS DESCRIBED HEREIN OR RELATED ITEMS CAN CAUSE DEATH, PERSONAL INJURY AND PROPERTY DAMAGE.

This document and other information from Parker-Hannifin Corporation, its subsidiaries and authorized distributors provide product or system options for further investigation by users having technical expertise.

The user, through its own analysis and testing, is solely responsible for making the final selection of the system and components and assuring that all performance, endurance, maintenance, safety and warning requirements of the application are met. The user must analyze all aspects of the application, follow applicable industry standards, and follow the information concerning the product in the current product catalog and in any other materials provided from Parker or its subsidiaries or authorized distributors.

To the extent that Parker or its subsidiaries or authorized distributors provide component or system options based upon data or specifications provided by the user, the user is responsible for determining that such data and specifications are suitable and sufficient for all applications and reasonably foreseeable uses of the components or systems.

Offer of Sale

The items described in this document are hereby offered for sale by Parker-Hannifin Corporation, its subsidiaries or its authorized distributors. This offer and its acceptance are governed by the provisions stated in the detailed “Offer of Sale” elsewhere in this document or available at www.parker.com/ipdus.

© Copyright 2010 Parker Hannifin Corporation. All Rights Reserved.

Parker Hannifin Corporation
Instrumentation Products Division
Jacksonville, AL USA
http://www.parker.com/ipdus

Table of Contents

Description ..... **Pages**

N Series Metering Valves 2-7

NS Series Metering Valves 2-3

NM Series Metering Valves 4-5

NL Series Metering Valves 4-6

N Series Ordering Information 7

HR Series Metering Valves 8-12

Available End Connections 13

Offer of Sale 15-16

Parker Hannifin Corporation
Instrumentation Products Division
Jacksonville, AL USA
http://www.parker.com/ipdus

N

NS Series Introduction

The Parker NS Series of metering valves are designed to provide accurate and stable control of flow rates in analytical, instrumentation, and research applications. A variety of connection sizes, body patterns and materials of construction provide considerable application versatility. For higher flow rates, refer to the NM and NL Series of metering valves.

Features

- Precision tapered valve stem accurately controls flow
- Brass or 316 SS forged body construction
- Panel or in-line mounting
- Positive handle stop prevents overtightening
- Angle or in-line patterns
- Valve stem threads not in contact with process fluid
- 100% function tested
- Optional stem seals and handles

Specifications

Pressure Rating at all temperatures:
.....2000 psig (138 bar) CWP

Flow Data:
Orifice:.....0.03" (0.76mm)
In-line pattern: ..... $C_v = 0.039$; $X_T = 0.64$
Angle pattern:..... $C_v = 0.042$; $X_T = 0.53$

Stem Taper: ..... 1°

Turns to open: ..... 13 +/- 1

Valve / Seal Temperature Ratings

Nitrile Rubber:
..... -10°F to 250°F (-23°C to 121°C)

Ethylene Propylene Rubber:
..... -40°F to 250°F (-40°C to 121°C)

Neoprene Rubber:
..... -40°F to 250°F (-40°C to 121°C)

Fluorocarbon Rubber:
..... -10°F to 400°F (-23°C to 204°C)

Highly Fluorinated Fluorocarbon Rubber:
..... -25°F to 200°F (-32°C to 93°C)

Note: These products are not intended for use as shut-off valves. For metering valves with shut-off capabilities, please refer to page 8 of this catalog.

Item #	Description	Stainless Steel	Brass
1	Body	ASTM A 182 Type F316	ASTM B 283 Alloy C37700 (Nickel Plated)
2	Bonnet	ASTM A 479 Type 316	ASTM B 16 Alloy C36000 (Nickel Plated)
3	Stem	ASTM A 276 Type 316	ASTM A 276 Type 316
4	Handle*	ASTM A 582 Type 303	ASTM A 582 Type 303
5	Panel Nut	ASTM B 16 (Nickel Plated)	ASTM B 16 (Nickel Plated)
6	Sealing Ring*	Fluorocarbon Rubber	Fluorocarbon Rubber
7	Stem Seals*	Fluorocarbon Rubber	Fluorocarbon Rubber
8	Handle Set Screw**	Stainless Steel	Stainless Steel
9	Handle Lock Screw**	Stainless Steel	Stainless Steel

* Optional Handles, Sealing Ring and Stem Seal materials are available. See How to Order.
** K, KS, and F Handles use 18-8 stainless steel screws. V Handles use alloy steel screws. Lock Screws are not used on F and V Handles.
Lubrication: Perfluorinated polyether.

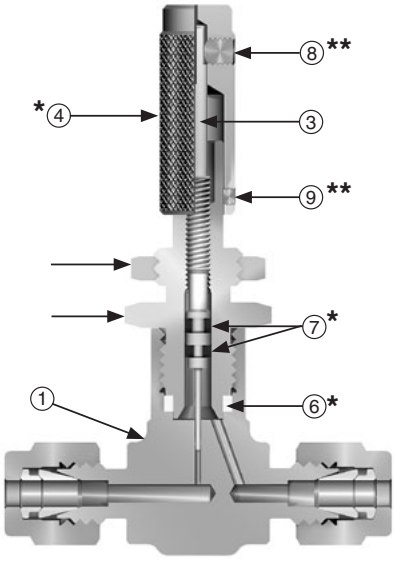

Model Shown: 2A-NSL-NE-SS-K

Flow tested in accordance with ISA S75.02. Gas flow will be choked when $P_1 - P_2 / P_1 = X_T$.

Parker Hannifin Corporation
Instrumentation Products Division
Jacksonville, AL USA
http://www.parker.com/ipdus

NS Series Dimensions

Basic Part Number	End Connections (Inlet) Port 1	End Connections (Outlet) Port 2	Dimensions A* inch	A* mm	B* inch	B* mm	C inch	C mm	D inch	D mm
1A-NSL	1/16" Compression A-LOK®		0.78	19.8	0.78	19.8	0.31	7.9	0.94	23.9
1A-NSA			0.82	20.8	0.82	20.8	0.31	7.9	0.94	23.9
1Z-NSL	1/16" Compression CPI™		0.78	19.8	0.78	19.8	0.31	7.9	0.94	23.9
1Z-NSA			0.82	20.8	0.82	20.8	0.31	7.9	0.94	23.9
2A-NSL	1/8" Compression A-LOK®		0.95	24.1	0.95	24.1	0.31	7.9	0.94	23.9
2A-NSA			1.01	25.7	1.01	25.7	0.31	7.9	0.94	23.9
2M-NSL	1/8" Male NPT		0.88	22.4	0.88	22.4	0.31	7.9	0.94	23.9
2M-NSA			0.88	22.4	0.88	22.4	0.31	7.9	0.94	23.9
2Z-NSL	1/8" Compression CPI™		0.95	24.1	0.95	24.1	0.31	7.9	0.94	23.9
2Z-NSA			1.01	25.7	1.01	25.7	0.31	7.9	0.94	23.9
4A-NSL	1/4" Compression A-LOK®		1.02	25.9	1.02	25.9	0.31	7.9	0.94	23.9
4A-NSA			1.02	25.9	1.02	25.9	0.31	7.9	0.94	23.9
4V-NSL	1/4" VacuSeal		1.03	26.2	1.03	26.2	0.53	13.5	0.94	23.9
4Z-NSL	1/4" Compression CPI™		1.02	25.9	1.02	25.9	0.31	7.9	0.94	23.9
4Z-NSA			1.02	25.9	1.02	25.9	0.31	7.9	0.94	23.9
M3A-NSL	3mm Compression A-LOK®		0.94	23.9	0.94	23.9	0.31	7.9	0.94	23.9
M3A-NSA			1.00	25.4	1.00	25.4	0.31	7.9	0.94	23.9
M3Z-NSL	3mm Compression CPI™		0.94	23.9	0.94	23.9	0.31	7.9	0.94	23.9
M3Z-NSA			1.00	25.4	1.00	25.4	0.31	7.9	0.94	23.9
M6A-NSL	6mm Compression A-LOK®		1.02	25.9	1.02	25.9	0.31	7.9	0.94	23.9
M6A-NSA			1.02	25.9	1.02	25.9	0.31	7.9	0.94	23.9
M6Z-NSL	6mm Compression CPI™		1.02	25.9	1.02	25.9	0.31	7.9	0.94	23.9
M6Z-NSA			1.02	25.9	1.02	25.9	0.31	7.9	0.94	23.9

* For CPI™ and A-LOK®, dimensions are measured with nuts in the finger tight position.

Dimensions in inches/millimeters are for reference only, subject to change.

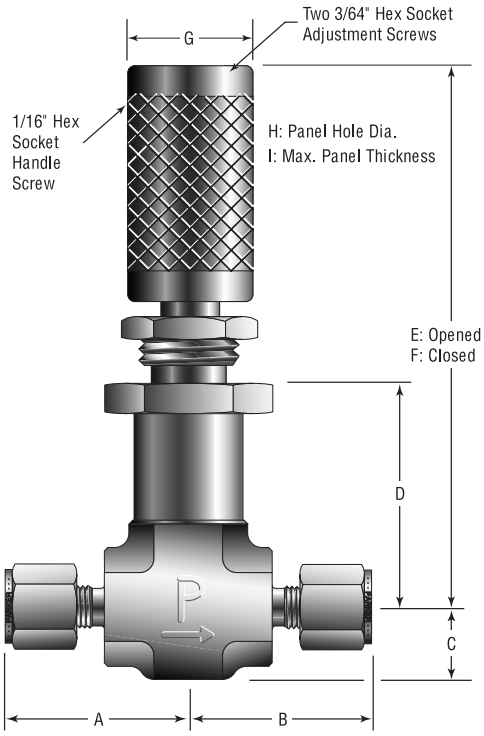

Model Shown: 2A-NSL-BN-SS-F

Handle Dimensions

	K & KS inch	K & KS mm	V inch	V mm	F inch	F mm
E	2.50	63.5	2.97	75.4	2.97	75.4
F	2.27	57.7	2.74	69.6	2.74	69.6
G	0.37	9.4	0.84	21.3	0.37	9.4
H	0.46	11.7	0.46	11.7	0.46	11.7
I	0.16	4.1	0.16	4.1	0.16	4.1

Dimensions in inches/millimeters are for reference only, subject to change.

NS Series – C_v vs. Turns Open

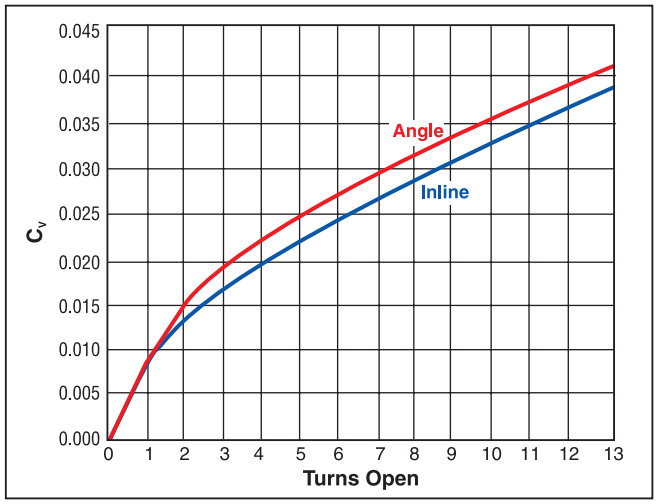

NS Series – Water Flow Data

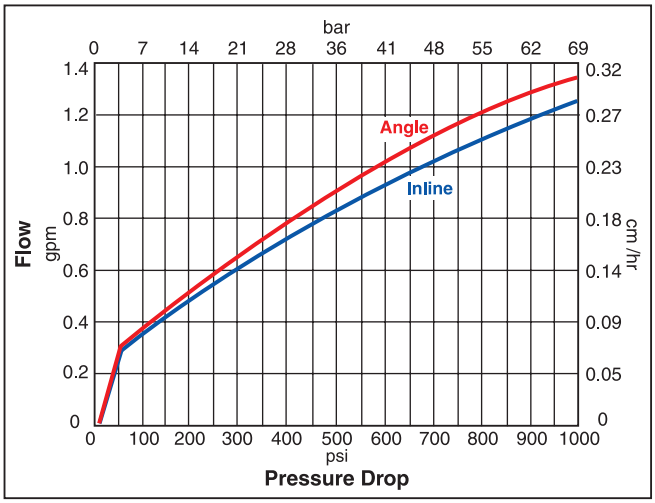

Parker Hannifin Corporation
Instrumentation Products Division
Jacksonville, AL USA
http://www.parker.com/ipdus

N

Introduction

The Parker NM and NL Series of metering valves provide higher flow rates than the NS Series of metering valves and retain most of the features found in the NS Series.

Features

- Precisely tapered valve stem accurately controls flow
- Brass or 316 SS forged body construction
- Panel or in-line mounting
- Angle or in-line patterns
- Valve stem threads not in contact with process fluid
- 100% function tested
- Optional stem seals and handles

Specifications

Pressure Rating at all temperatures:
.....1000 psig (69 bar) CWP

NM Specifications

Flow Data:

Orifice:.....0.06" (1.5mm)
In-line pattern: ..... $C_v = 0.055$; $X_T = 0.41$
Angle pattern:..... $C_v = 0.057$; $X_T = 0.38$

Stem Taper: ..... 3°

Turns to open: ..... 9 +/- 1

NL Specifications

Flow Data:

Orifice:.....0.13" (3.3mm)
In-line pattern: ..... $C_v = 0.207$; $X_T = 0.71$
Angle pattern:..... $C_v = 0.299$; $X_T = 0.60$

Stem Taper: ..... 5°

Turns to open: ..... 10 +/- 1

Valve / Seal Temperature Ratings

Nitrile Rubber:.....-10°F to 250°F (-23°C to 121°C)

Ethylene Propylene Rubber:
.....-40°F to 250°F (-40°C to 121°C)

Neoprene Rubber:.....-40°F to 250°F (-40°C to 121°C)

Fluorocarbon Rubber:
.....-10°F to 400°F (-23°C to 204°C)

Highly Fluorinated Fluorocarbon Rubber:
.....-25°F to 200°F (-32°C to 93°C)

Item #	Description	Stainless Steel	Brass
1	Body	ASTM A 182 Type F316	ASTM B 283 Alloy C37700 (Nickel Plated)
2	Bonnet	ASTM A 479 Type 316	ASTM B 16 Alloy C36000 (Nickel Plated)
3	Stem	ASTM A 276 Type 316	ASTM A 276 Type 316
4	Handle*	Stainless Steel	Stainless Steel
5	Panel Nut	ASTM B 16 (Nickel Plated)	ASTM B 16 (Nickel Plated)
6	Sealing Ring*	PTFE	PTFE
7	Stem Seals*	Fluorocarbon Rubber	Fluorocarbon Rubber
8	Handle Set Screw**	Stainless Steel	Stainless Steel
9	Handle Lock Screw**	Stainless Steel	Stainless Steel

* Optional Handles, Sealing Ring and Stem Seal materials are available. See How to Order.
** K and KS Handles use 18-8 stainless steel screws. V Handles use alloy steel screws. Lock Screws are not used on F and V Handles. Lubrication: Perfluorinated polyether.

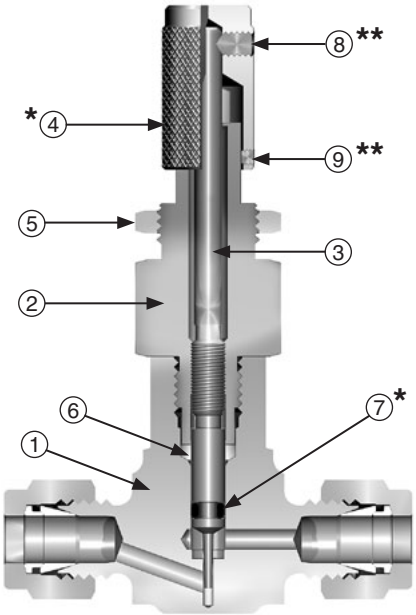

Model Shown: 4A-NML-KZ-SS-K

Note: These products are not intended for use as shut-off valves. For metering valves with shut-off capabilities, please refer to page 8 of this catalog.

Flow tested in accordance with ISA S75.02. Gas flow will be choked when $P_1 - P_2 / P_1 = X_T$.

Parker Hannifin Corporation
Instrumentation Products Division
Jacksonville, AL USA
http://www.parker.com/ipdus

NM Dimensions

Basic Part Number	End Connections (Inlet) Port 1	End Connections (Outlet) Port 2	A* inch	A* mm	B* inch	B* mm	C inch	C mm	D inch	D mm
2A-NML	1/8" Compression A-LOK®		1.03	26.2	1.03	26.2	0.41	10.4	1.56	39.6
2A-NMA			1.03	26.2	1.03	26.2	0.41	10.4	1.07	27.2
2F-NML	1/8" Female NPT		0.93	23.6	0.93	23.6	0.41	10.4	1.56	39.6
2F-NMA			0.93	23.6	0.93	23.6	0.41	10.4	1.07	27.2
2Z-NML	1/8" Compression CPI™		1.03	26.2	1.03	26.2	0.41	10.4	1.56	39.6
2Z-NMA			1.03	26.2	1.03	26.2	0.41	10.4	1.07	27.2
4A-NML	1/4" Compression A-LOK®		1.11	28.2	1.11	28.2	0.41	10.4	1.56	39.6
4A-NMA			1.11	28.2	1.11	28.2	0.41	10.4	1.07	27.2
4M-NML	1/4" Male NPT		0.93	23.6	0.93	23.6	0.41	10.4	1.56	39.6
4M-NMA			0.93	23.6	0.93	23.6	0.41	10.4	1.07	37.2
4V-NML	1/4" VacuSeal		1.03	26.2	1.03	26.2	0.53	13.5	1.56	39.6
4Z-NML	1/4" Compression CPI™		1.11	28.2	1.11	28.2	0.41	10.4	1.56	39.6
4Z-NMA			1.11	28.2	1.11	28.2	0.41	10.4	1.07	27.2
M3A-NML	3mm Compression A-LOK®		1.00	25.4	1.00	25.4	0.41	10.4	1.56	39.6
M3A-NMA			1.00	25.4	1.00	25.4	0.41	10.4	1.07	27.2
M3Z-NML	3mm Compression CPI™		1.00	25.4	1.00	25.4	0.41	10.4	1.56	39.6
M3Z-NMA			1.00	25.4	1.00	25.4	0.41	10.4	1.07	27.2
M6A-NML	6mm Compression A-LOK®		1.09	27.7	1.09	27.7	0.41	10.4	1.56	39.6
M6A-NMA			1.09	27.7	1.09	27.7	0.41	10.4	1.07	27.2
M6Z-NML	6mm Compression CPI™		1.09	27.7	1.09	27.7	0.41	10.4	1.56	39.6
M6Z-NMA			1.09	27.7	1.09	27.7	0.41	10.4	1.07	27.2

* For CPI™ and A-LOK®, dimensions are measured with nuts in the finger tight position.

Dimensions in inches/millimeters are for reference only, subject to change.

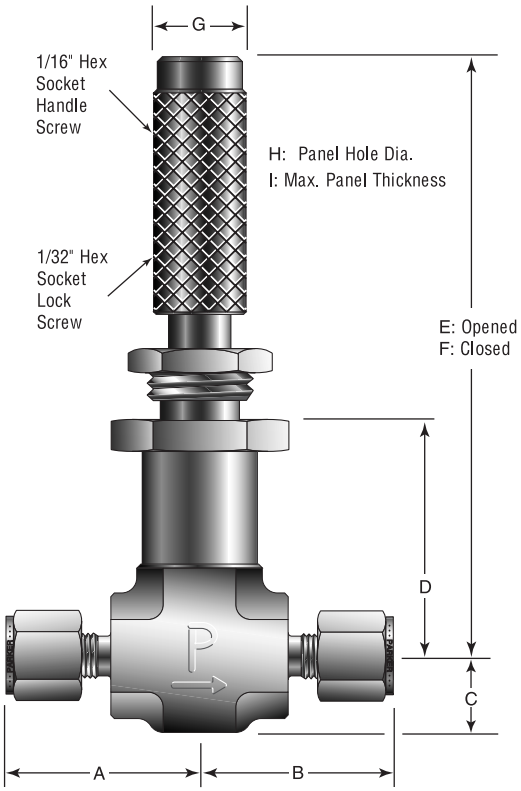

Model Shown: 2A-NML-V-SS-K

Handle Dimensions

	On In-Line Pattern Valves K & KS inch	On In-Line Pattern Valves K & KS mm	On In-Line Pattern Valves V inch	On In-Line Pattern Valves V mm	On Angle Pattern Valves K & KS inch	On Angle Pattern Valves K & KS mm	On Angle Pattern Valves V inch	On Angle Pattern Valves V mm
E	3.22	81.8	3.63	92.2	2.82	71.6	3.23	82.0
F	2.99	75.9	3.40	86.4	2.59	65.8	3.00	76.2
G	0.50	12.7	0.84	21.3	0.50	12.7	0.84	21.3
H	0.58	14.7	0.58	14.7	0.58	14.7	0.58	14.7
I	0.19	4.8	0.19	4.8	0.27	6.9	0.27	6.9

Dimensions in inches/millimeters are for reference only, subject to change.

NM Series – C_v vs. Turns Open

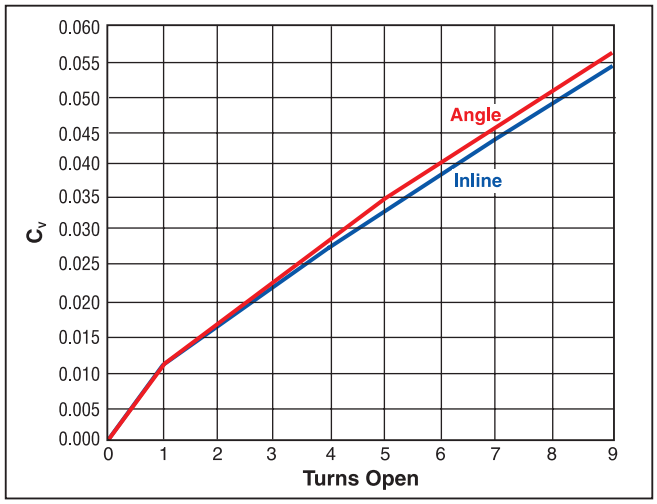

NM Series – Water Flow Data

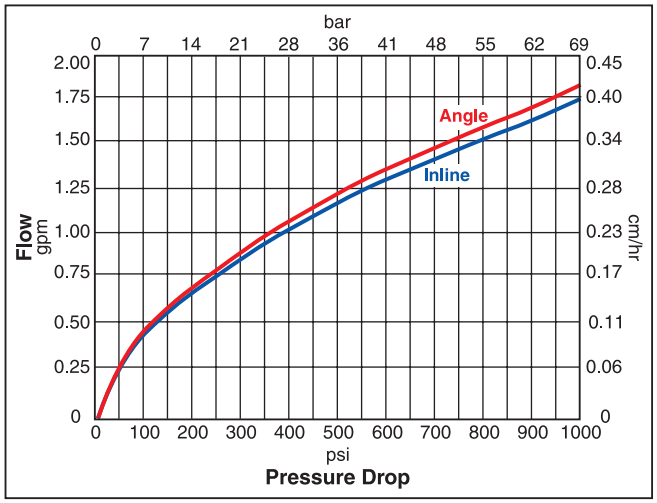

Parker Hannifin Corporation
Instrumentation Products Division
Jacksonville, AL USA
http://www.parker.com/ipdus

N

NL Dimensions

Dimensions in inches/millimeters are for reference only, subject to change.

Basic Part Number	End Connections (Inlet) Port 1	End Connections (Outlet) Port 2	Dimensions A* inch	A* mm	B* inch	B* mm	C inch	C mm	D inch	D mm
2F-NLL	1/8" Female NPT		0.93	23.6	0.93	23.6	0.41	10.4	1.56	39.6
2F-NLA			0.93	23.6	0.93	23.6	0.41	10.4	1.07	27.2
4A-NLL	1/4" Compression A-LOK®		1.16	29.5	1.16	29.5	0.41	10.4	1.56	39.6
4A-NLA			1.16	29.5	1.16	29.5	0.41	10.4	1.07	27.2
4M-NLL	1/4" Male NPT		0.93	23.6	0.93	23.6	0.41	10.4	1.56	39.6
4M-NLA			0.93	23.6	0.93	23.6	0.41	10.4	1.07	37.2
4V-NLL	1/4" VacuSeal		1.03	26.2	1.03	26.2	0.53	13.5	1.56	39.6
4Z-NLL	1/4" Compression CPI™		1.16	29.5	1.16	29.5	0.41	10.4	1.56	39.6
4Z-NLA			1.16	29.5	1.16	29.5	0.41	10.4	1.07	27.2
6A-NLL	3/8" Compression A-LOK®		1.24	31.5	1.24	31.5	0.41	10.4	1.56	39.6
6Z-NLL	3/8" Compression CPI™		1.24	31.5	1.24	31.5	0.41	10.4	1.07	27.2
M6A-NLL	6mm Compression A-LOK®		1.12	28.4	1.12	28.4	0.41	10.4	1.56	39.6
M6A-NLA			1.15	29.2	1.15	29.2	0.41	10.4	1.07	27.2
M6Z-NLL	6mm Compression CPI™		1.12	28.4	1.12	28.4	0.41	10.4	1.56	39.6
M6Z-NLA			1.15	29.2	1.15	29.2	0.41	10.4	1.07	27.2

* For CPI™ and A-LOK®, dimensions are measured with nuts in the finger tight position.

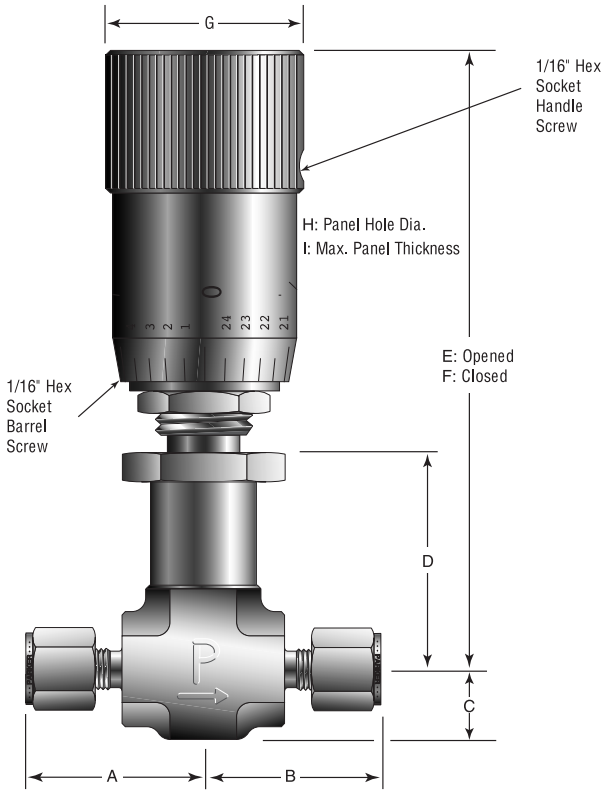

Model Shown: 4A-NLL-V-SS-V

Handle Dimensions

	On In-Line Pattern Valves K & KS inch	K & KS mm	V inch	V mm	On Angle Pattern Valves K & KS inch	K & KS mm	V inch	V mm
E	2.92	74.2	3.33	84.6	2.83	71.9	3.24	82.3
F	2.67	67.8	3.08	78.2	2.58	65.8	2.99	75.9
G	0.50	12.7	0.84	21.3	0.50	12.7	0.84	21.3
H	0.58	14.7	0.58	14.7	0.58	14.7	0.58	14.7
I	0.19	4.8	0.19	4.8	0.27	6.9	0.27	6.9

Dimensions in inches/millimeters are for reference only, subject to change.

NL Series – C_v vs. Turns Open

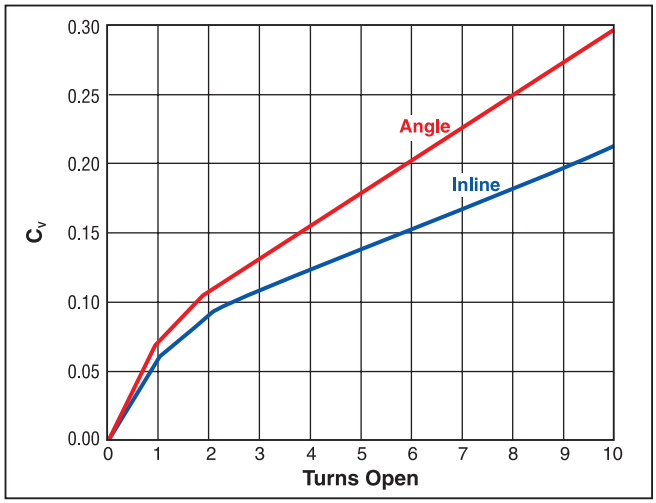

NL Series – Water Flow Data

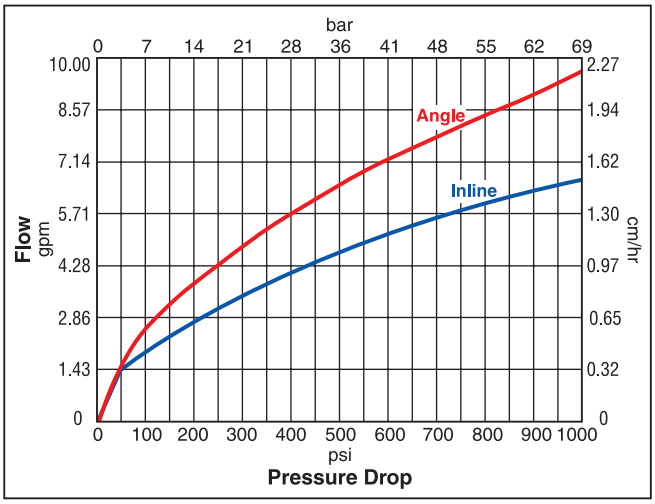

Parker Hannifin Corporation
Instrumentation Products Division
Jacksonville, AL USA
http://www.parker.com/ipdus

How to Order

Dimensions in inches/millimeters are for reference only, subject to change.

The correct part number is easily derived from the following example and ordering chart. The six product characteristics required are coded as shown in the chart.

The example below describes a stainless steel in-line NLL series valve with 1/4" CPI compression ends, fluorocarbon seals and vernier handles.

Example: 4Z-NLL-V-SS-V

4Z		–	NLL	–	V	–	SS	–	V
Inlet Port*	Outlet Port*		Valve Series		Seal Material		Body Material		Handle Type

Inlet Port	Outlet Port	Valve Series	Seal Material		Body Material		Handle Type	
1A, 1Z, 2A, 2M, 2Z,4A, 4V, 4Z, M3A, M3Z, M6A, M6Z		NSA NSL	**BN**	Nitrile	**B**	Brass	**K**	Knurled
			EPR	Ethylene Propylene Rubber	**SS**	Stainless Steel	**KS**	Knurled with Slot
2A, 2F, 2Z, 4A, 4M, 4V, 4Z, M3A, M3Z, M6A, M6Z		NMA NML	**NE**	Neoprene Rubber			**V**	Vernier
			V	Fluorocarbon Rubber			**F****	Precision Adjustment
2F, 4A, 4M, 4V, 4Z, 6A, 6Z, M6A, M6Z		NLA NLL	**KZ**	Highly Fluorinated Fluorocarbon Rubber				

* If the inlet and outlet ports are the same, eliminate the outlet port designator.

** F handle available only on NS Series.

Optional Handles

Knurled (K) and Knurled with Slot (KS)

- Knurled K handle for ease of actuation
- Knurled with Slot (KS) adds a screw-driver slot across the top for locations where handle access is difficult

Vernier (V)

- Precision graduated aluminum alloy permits repeatable flow settings
- Resolution to 1/25th turn

Precision Adjustment (F)

- Adjustable torque handle for precise positioning
- Knurled metal with two top mounted adjustment screws
- NS Series only

How to Order Options

Oxygen Cleaning — Add the suffix **-C3** to the end of the part number to receive valves cleaned and assembled for oxygen service in accordance with Parker Specification ES8003. Example: 4A-NMA-EPR-SS-V**-C3**.

Parker Hannifin Corporation
Instrumentation Products Division
Jacksonville, AL USA
http://www.parker.com/ipdus

HR

Introduction

Parker HR Series Metering Valves provide the highest degree of precision metering for moderate pressure applications. A choice of seven precision ground, tapered flat, non-rotating and non-rising valve stems enable repeatable metering at flow capacities as low as 0.0004 C_V. With 15 stem turns, this valve offers the ultimate in precision flow control. This series also features shut-off capability not found in most metering valves.

Features

- Bubble tight shut-off
- Special fine pitch thread with 15 turn resolution is isolated from contact with process fluids
- Non-rotating/non-rising valve stem design provides smooth, non-reversing flow characteristics
- Seven optional valve stem tapers
- Special orifice liner assures long life
- Panel or in-line mounting
- Angle or in-line patterns
- Brass or 316 SS forged body construction
- 100% function tested for actuation and shut-off

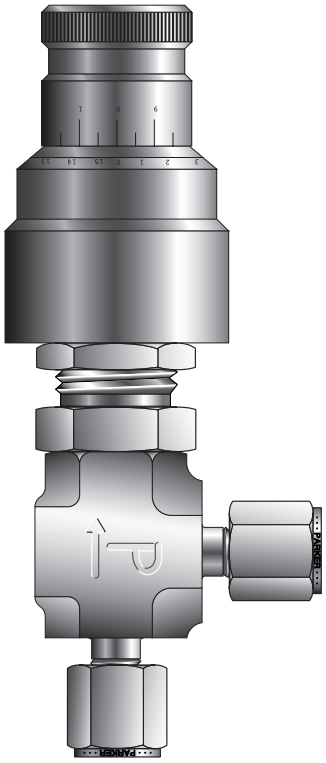

Model Shown: 2A-H0A-NE-SS-TC

Specifications

Pressure Rating at all temperatures:
..... 250 psig (17 bar) CWP

Flow Data*:

H0 ..... Orifice: 0.000002 in²
..... In-line pattern: $C_V = 0.00034$; $X_T = 0.85$
..... Angle pattern: $C_V = 0.00034$; $X_T = 0.66$

H1 ..... Orifice: 0.000083 in2
..... In-line pattern: $C_V = 0.0008$; $X_T = 0.85$
..... Angle pattern: $C_V = 0.0008$; $X_T = 0.66$

H2 ..... Orifice: 0.000168 in2
..... In-line pattern: $C_V = 0.0014$; $X_T = 0.85$
..... Angle pattern: $C_V = 0.0014$; $X_T = 0.66$

H3 ..... Orifice: 0.000241 in2
..... In-line pattern: $C_V = 0.0031$; $X_T = 0.85$
..... Angle pattern: $C_V = 0.0031$; $X_T = 0.66$

H4 ..... Orifice: 0.000674 in2
..... In-line pattern: $C_V = 0.0077$; $X_T = 0.85$
..... Angle pattern: $C_V = 0.0077$; $X_T = 0.66$

H5 ..... Orifice: 0.002325 in2
..... In-line pattern: $C_V = 0.0300$; $X_T = 0.85$
..... Angle pattern: $C_V = 0.0300$; $X_T = 0.66$

H6 ..... Orifice: 0.006227 in2
..... In-line pattern: $C_V = 0.0900$; $X_T = 0.85$
..... Angle pattern: $C_V = 0.0900$; $X_T = 0.66$

Turns to open: 15 +/- 1

Valve / Seal Temperature Ratings

Nitrile Rubber:.....-10°F to 250°F (-23°C to 121°C)

Ethylene Propylene Rubber:
.....-40°F to 250°F (-40°C to 121°C)

Neoprene Rubber:.....-40°F to 250°F (-40°C to 121°C)

Fluorocarbon Rubber:
.....-10°F to 400°F (-23°C to 204°C)

Highly Fluorinated Fluorocarbon Rubber:
.....-25°F to 200°F (-32°C to 93°C)

*Flow tested in accordance with ISA S75.02. Gas flow will be choked when $P_1 - P_2 / P_1 = x_T$.

**The Turns Counter Handle (TC) requires the HT option for use at temperatures above 300°F (149°C).

Parker Hannifin Corporation
Instrumentation Products Division
Jacksonville, AL USA
http://www.parker.com/ipdus

HR

HR Series Dimensions

Dimensions in inches/millimeters are for reference only, subject to change.

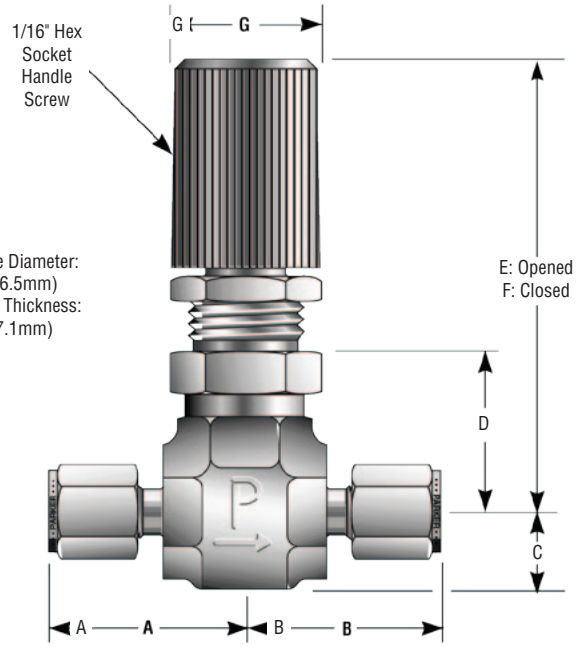

Model Shown: 4A-H6L-KZ-SS-K

Basic Part Number	End Connections (Inlet) Port 1	End Connections (Outlet) Port 2	Dimensions A† inch	A† mm	B† inch	B† mm	C inch	C mm	D inch	D mm
1A-H#A	1/16" Compression A-LOK®		0.92	23.4	0.92	23.4	0.41	10.4	0.73	18.5
1Z-H#A	1/16" Compression CPI™		0.92	23.4	0.92	23.4	0.41	10.4	0.73	18.5
2A-H#L	1/8" Compression A-LOK®		1.03	26.2	1.03	26.2	0.41	10.4	0.85	21.6
2A-H#A			1.03	26.2	1.03	26.2	0.41	10.4	0.73	18.5
2F-H#L	1/8" Female NPT		0.93	23.6	0.93	23.6	0.41	10.4	0.85	21.6
2F-H#A			0.93	23.6	0.93	23.6	0.41	10.4	0.73	18.5
2Z-H#L	1/8" Compression CPI™		1.03	26.2	1.03	26.2	0.41	10.4	0.85	21.6
2Z-H#A			1.03	26.2	1.03	26.2	0.41	10.4	0.73	18.5
4A-H#L	1/4" Compression A-LOK®		1.11	28.2	1.11	28.2	0.41	10.4	0.85	21.6
4A-H#A			1.11	28.2	1.11	28.2	0.41	10.4	0.73	18.5
4F-H#L	1/4" Female NPT		0.97	24.6	0.97	24.6	0.41	10.4	0.85	21.6
4F-H#A			0.97	24.6	0.97	24.6	0.41	10.4	0.73	18.5
4M-H#L	1/4" Male NPT		0.93	23.6	0.93	23.6	0.41	10.4	0.85	21.6
4M-H#A			0.93	23.6	0.93	23.6	0.41	10.4	0.73	18.5
4Z-H#L	1/4" Compression CPI™		1.11	28.2	1.11	28.2	0.41	10.4	0.85	21.6
4Z-H#A			1.11	28.2	1.11	28.2	0.41	10.4	0.73	18.5
M3A-H#L	3mm Compression A-LOK®		1.00	25.4	1.00	25.4	0.41	10.4	0.85	21.6
M3A-H#A			1.00	25.4	1.00	25.4	0.41	10.4	0.73	18.5
M3Z-H#L	3mm Compression CPI™		1.00	25.4	1.00	25.4	0.41	10.4	0.85	21.6
M3Z-H#A			1.00	25.4	1.00	25.4	0.41	10.4	0.73	18.5
M6A-H#L	6mm Compression A-LOK®		1.15	29.2	1.15	29.2	0.41	10.4	0.85	21.6
M6A-H#A			1.15	29.2	1.15	29.2	0.41	10.4	0.73	18.5
M6Z-H#L	6mm Compression CPI™		1.15	29.2	1.15	29.2	0.41	10.4	0.85	21.6
M6Z-H#A			1.15	29.2	1.15	29.2	0.41	10.4	0.73	18.5

† For CPI™ and A-LOK®, dimensions are measured with nuts in the finger tight position.

Handle Dimensions

	On In-Line Pattern Valves K inch	K mm	TC inch	TC mm	NS inch	NS mm	On Angle Pattern Valves K inch	K mm	TC inch	TC mm	NS inch	NS mm
E	2.35	59.7	2.88	73.2	2.33	59.2	2.23	56.6	2.76	70.1	2.21	56.1
F	2.35	59.7	2.88	73.2	2.33	59.2	2.23	56.6	2.76	70.1	2.21	56.1
G	0.78	19.8	1.12	28.4	0.25	6.4	0.78	19.8	1.12	28.4	0.25	6.4

Dimensions in inches/millimeters are for reference only, subject to change.

Parker Hannifin Corporation
Instrumentation Products Division
Jacksonville, AL USA
http://www.parker.com/ipdus

HR

Materials of Construction

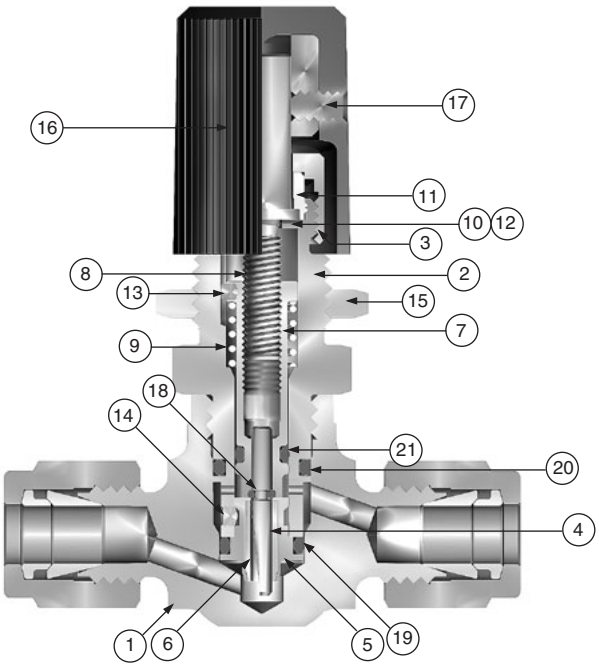

Model Shown: 4A-H4L-NE-SS-K

Item #	Description	Stainless Steel	Brass
1	Body	ASTM A 182 Type F316	ASTM B 283 Alloy C37700 (Nickel Plated)
2	Bonnet	ASTM A 479 Type 316	ASTM B 16 Alloy C36000 (Nickel Plated)
3	Bonnet Nut	ASTM B 16 Alloy C36000	ASTM B 16 Alloy C36000
4	Lower Stem	316 Stainless Steel	316 Stainless Steel
5	Orifice	ASTM A 479 Type 316	ASTM B 453 Alloy C34000
6	Orifice Liner	Mica-Filled PTFE	Mica-Filled PTFE
7	Stem Guide	ASTM A 182 Type F316	ASTM B 16 Alloy C36000
8	Upper Stem	ASTM B 150 Alloy C64200	ASTM B 150 Alloy C64200
9	Spring	302 Stainless Steel	302 Stainless Steel
10	Wave Washer	Steel	Steel
11	Friction Collar*	Acetal	Acetal
12	Stem Washer	Nylon	Nylon
13	Stem Guide Pin	Alloy Steel	Alloy Steel
14	Orifice Screw	Stainless Steel	Stainless Steel
15	Panel Nut	ASTM B 16 Nickel Plated)	ASTM B 16 (Nickel Plated)
16	Handle**	ABS Plastic	ABS Plastic
17	Handle Set Screw	Alloy Steel	Alloy Steel
18	Lower Stem O-Ring***	Fluorocarbon Rubber	Fluorocarbon Rubber
19	Orifice O-Ring***	Fluorocarbon Rubber	Fluorocarbon Rubber
20	Bonnet O-Ring***	Fluorocarbon Rubber	Fluorocarbon Rubber
21	Stem Guide O-Ring***	Fluorocarbon Rubber	Fluorocarbon Rubber

* Friction Collar is Polymide with HT option.
** Acrylonitrile-Butadiene-Styrene. Optional handles are available.
***Optional materials are available – See How to Order.
Lubrication: Perfluorinated polyether.

Parker Hannifin Corporation
Instrumentation Products Division
Jacksonville, AL USA
http://www.parker.com/ipdus

C_v vs. Turns Open

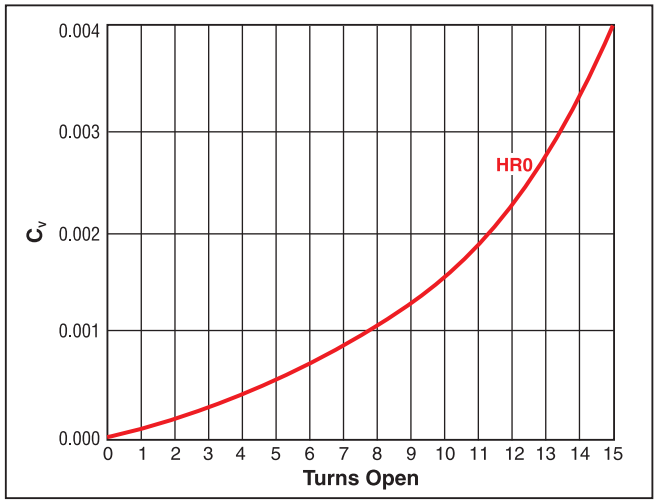

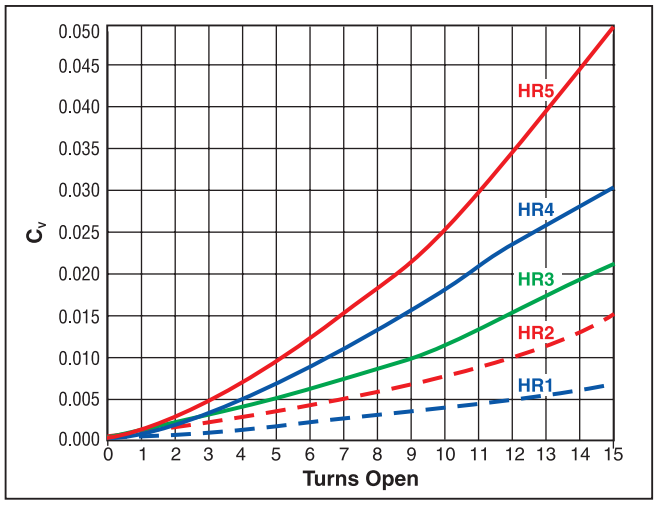

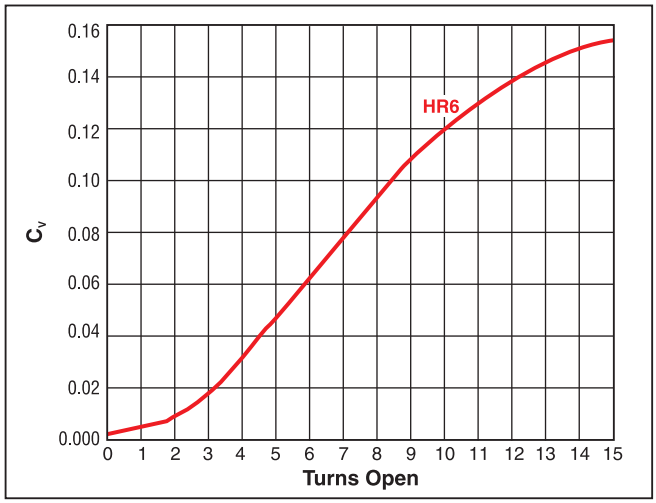

Water Flow Data

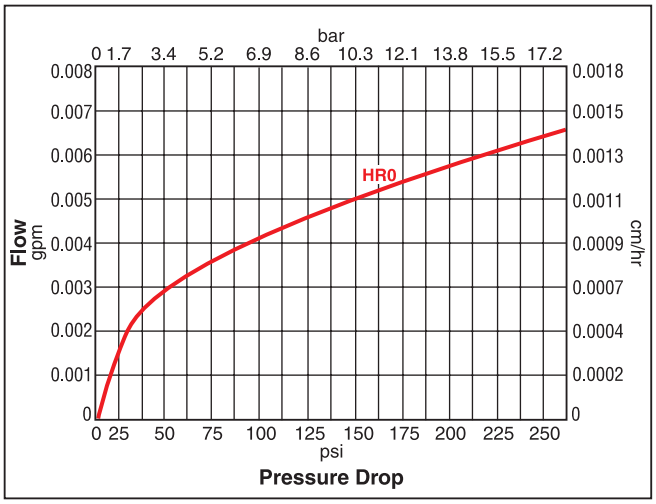

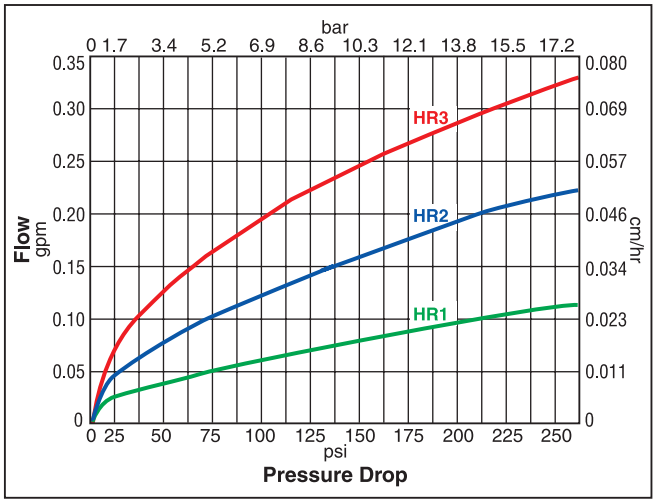

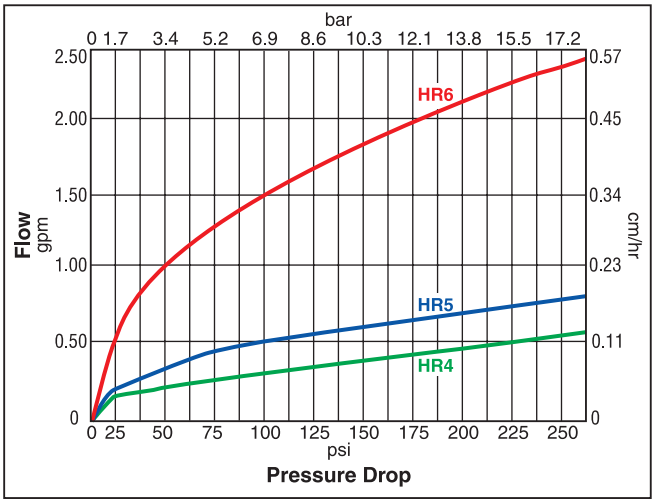

Parker Hannifin Corporation
Instrumentation Products Division
Jacksonville, AL USA
http://www.parker.com/ipdus

HR

How to Order

Dimensions in inches/millimeters are for reference only, subject to change.

The correct part number is easily derived from the following example and ordering chart. The six product characteristics required are coded as shown in the chart.

The example below describes a stainless steel H3L in-line series valve with 1/4" CPI compression ends, fluorocarbon seals and vernier handle. "3" indicates a C_V of 0.200 per page 8.

Example: 4Z-H3L-V-SS-TC

4Z		–	H3L	–	V	–	SS	–	TC
Port 1	Port 2		Valve/Stem Series		Seal Material		Body Material		Handle Type

Inlet Port	Outlet Port	Valve/Stem Series**	Seal Material	Body Material	Handle Type
1A, 1Z		H#A	**BN** Nitrile Rubber **EPR** Ethylene Propylene Rubber **NE** Neoprene Rubber **V** Fluorocarbon Rubber **KZ** Highly Fluorinated Fluorocarbon Rubber	**B** Brass **SS** Stainless Steel	**K** Knurled **TC** Turns Counter **NS** No Handle (Slotted Stem)
2A, 2F, 2Z, 4A, 4F, 4M, 4Z, M3A, M3Z, M6A, M6Z		H#A H#L			

* If the inlet and outlet ports are the same, eliminate the outlet port designator.

** See flow data specifications on page 8 to fully identify the valve/stem series properly.

Handle Options

Knurled (K)

Knurled ABS molded handle provides ease of actuation

Turns Counter (TC)

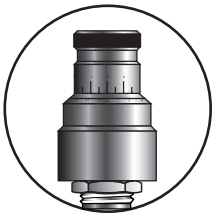

Graduated black-anodized aluminum alloy handle provides a readable count of turns open

Slotted Stem (NS)

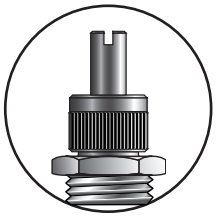

Screwdriver slot on top of stem may be used for inaccessible locations or tamper resistance

How to Order Options

Oxygen Cleaning – Add the suffix **-C3** to the end of the part number to receive valves cleaned and assembled for oxygen service in accordance with Parker Specification ES8003. **Example:** 4A-H1A-EPR-SS-K**-C3**

High Temperature – Add the suffix **-HT** to the end of the part number to receive valves with Turns Counter (TC) handles suitable for service above 300°F (149°C). **Example:** M3A-H4L-KZ-SS-TC**-HT**

Parker Hannifin Corporation
Instrumentation Products Division
Jacksonville, AL USA
http://www.parker.com/ipdus

Available End Connections

Standard End Connections

A - Two ferrule A-LOK® compression port

Z - Single ferrule CPI™ compression port

F - ANSI/ASME B1.20.1 internal pipe threads

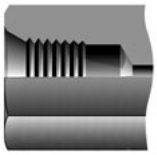

M - NSI/ASME B1.20.1 external pipe threads

Non-Standard End Connections

F5 - SAE J1926/2, Part 2: Heavy-duty (S Series) stud ends

G5 - SAE J1926/1, Part 1: Threaded port with O-ring seal in truncated housing

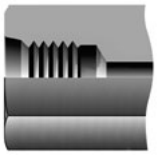

L - SAE J1453, Fitting – O-ring face seal – External thread with O-ring groove designed to seal with an elastomer against a sleeve

KF - British Standard BS 21 (ISO 7-1), Internal pipe threads

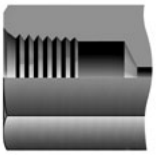

KM - British Standard BS 21 (ISO 7-1), External pipe threads

Q - UltraSeal face seal port

V - VacuSeal face seal port

Parker Hannifin Corporation
Instrumentation Products Division
Jacksonville, AL USA
http://www.parker.com/ipdus

Notes

Parker Hannifin Corporation
Instrumentation Products Division
Jacksonville, AL USA
http://www.parker.com/ipdus

Offer of Sale

The items described in this document and other documents and descriptions provided by Parker Hannifin Corporation, its subsidiaries and its authorized distributors ("Seller") are hereby offered for sale at prices to be established by Seller. This offer and its acceptance by any customer ("Buyer") shall be governed by all of the following Terms and Conditions. Buyer's order for any item described in its document, when communicated to Seller verbally, or in writing, shall constitute acceptance of this offer. All goods or work described will be referred to as "Products".

1. Terms and Conditions. Seller's willingness to offer Products, or accept an order for Products, to or from Buyer is expressly conditioned on Buyer's assent to these Terms and Conditions and to the terms and conditions found on-line at www.parker.com/saleterms/. Seller objects to any contrary or additional term or condition of Buyer's order or any other document issued by Buyer.

2. Price Adjustments; Payments. Prices stated on the reverse side or preceding pages of this document are valid for 30 days. After 30 days, Seller may change prices to reflect any increase in its costs resulting from state, federal or local legislation, price increases from its suppliers, or any change in the rate, charge, or classification of any carrier. The prices stated on the reverse or preceding pages of this document do not include any sales, use, or other taxes unless so stated specifically. Unless otherwise specified by Seller, all prices are F.O.B. Seller's facility, and payment is due 30 days from the date of invoice. After 30 days, Buyer shall pay interest on any unpaid invoices at the rate of 1.5% per month or the maximum allowable rate under applicable law.

3. Delivery Dates; Title and Risk; Shipment. All delivery dates are approximate and Seller shall not be responsible for any damages resulting from any delay. Regardless of the manner of shipment, title to any products and risk of loss or damage shall pass to Buyer upon tender to the carrier at Seller's facility (i.e., when it's on the truck, it's yours). Unless otherwise stated, Seller may exercise its judgment in choosing the carrier and means of delivery. No deferment of shipment at Buyers' request beyond the respective dates indicated will be made except on terms that will indemnify, defend and hold Seller harmless against all loss and additional expense. Buyer shall be responsible for any additional shipping charges incurred by Seller due to Buyer's changes in shipping, product specifications or in accordance with Section 13, herein.

4. Warranty. Seller warrants that the Products sold here-under shall be free from defects in material or workmanship for a period of twelve months from the date of delivery to Buyer or 2,000 hours of normal use, whichever occurs first. This warranty is made only to Buyer and does not extend to anyone to whom Products are sold after purchased from Seller. The prices charged for Seller's products are based upon the exclusive limited warranty stated above, and upon the following disclaimer: DISCLAIMER OF WARRANTY: THIS WARRANTY COMPRISES THE SOLE AND ENTIRE WARRANTY PERTAINING TO PRODUCTS PROVIDED HEREUNDER. SELLER DISCLAIMS ALL OTHER WARRANTIES, EXPRESS AND IMPLIED, INCLUDING MERCHANTABILITY AND FITNESS FOR A PARTICULAR PURPOSE.

5. Claims; Commencement of Actions. Buyer shall promptly inspect all Products upon delivery. No claims for shortages will be allowed unless reported to the Seller within 10 days of delivery. No other claims against Seller will be allowed unless asserted in writing within 60 days after delivery or, in the case of an alleged breach of warranty, within 30 days after the date within the warranty period on which the defect is or should have been discovered by Buyer. Any action based upon breach of this agreement or upon any other claim arising out of this sale (other than an action by Seller for any amount due to Seller from Buyer) must be commenced within thirteen months from the date of tender of delivery by Seller or, for a cause of action based upon an alleged breach of warranty, within thirteen months from the date within the warranty period on which the defect is or should have been discovered by Buyer.

6. LIMITATION OF LIABILITY. UPON NOTIFICATION, SELLER WILL, AT ITS OPTION, REPAIR OR REPLACE A DEFECTIVE PRODUCT, OR REFUND THE PURCHASE PRICE. IN NO EVENT SHALL SELLER BE LIABLE TO BUYER FOR ANY SPECIAL, INDIRECT, INCIDENTAL OR CONSEQUENTIAL DAMAGES ARISING OUT OF, OR AS THE RESULT OF, THE SALE, DELIVERY, NON-DELIVERY, SERVICING, USE OR LOSS OF USE OF THE PRODUCTS OR ANY PART THEREOF, OR FOR ANY CHARGES OR EXPENSES OF ANY NATURE INCURRED WITHOUT SELLER'S WRITTEN CONSENT, EVEN IF SELLER HAS BEEN NEGLIGENT, WHETHER IN CONTRACT, TORT OR OTHER LEGAL THEORY. IN NO EVENT SHALL SELLER'S LIABILITY UNDER ANY CLAIM MADE BY BUYER EXCEED THE PURCHASE PRICE OF THE PRODUCTS.

7. Contingencies. Seller shall not be liable for any default or delay in performance if caused by circumstances beyond the reasonable control of Seller.

8. User Responsibility. The user, through its own analysis and testing, is solely responsible for making the final selection of the system and Product and assuring that all performance, endurance, maintenance, safety and warning requirements of the application are met. The user must analyze all aspects of the application and follow applicable industry standards and Product information. If Seller provides Product or system options, the user is responsible for determining that such data and specifications are suitable and sufficient for all applications and reasonably foreseeable uses of the Products or systems.

9. Loss to Buyer's Property. Any designs, tools, patterns, materials, drawings, confidential information or equipment furnished by Buyer or any other items which become Buyer's property, may be considered obsolete and may be destroyed by Seller after two consecutive years have elapsed without Buyer placing an order for the items which are manufactured using such property. Seller shall not be responsible for any loss or damage to such property while it is in Seller's possession or control.

10. Special Tooling. A tooling charge may be imposed for any special tooling, including without limitation, dies, fixtures, molds and patterns, acquired to manufacture Products.

Parker Hannifin Corporation
Instrumentation Products Division
Jacksonville, AL USA
http://www.parker.com/ipdus

Such special tooling shall be and remain Seller's property notwithstanding payment of any charges by Buyer. In no event will Buyer acquire any interest in apparatus belonging to Seller which is utilized in the manufacture of the Products, even if such apparatus has been specially converted or adapted for such manufacture and notwithstanding any charges paid by Buyer. Unless otherwise agreed, Seller shall have the right to alter, discard or otherwise dispose of any special tooling or other property in its sole discretion at any time.

11. Buyer's Obligation; Rights of Seller. To secure payment of all sums due or otherwise, Seller shall retain a security interest in the goods delivered and this agreement shall be deemed a Security Agreement under the Uniform Commercial Code. Buyer authorizes Seller as its attorney to execute and file on Buyer's behalf all documents Seller deems necessary to perfect its security interest. Seller shall have a security interest in, and lien upon, any property of Buyer in Seller's possession as security for the payment of any amounts owed to Seller by Buyer.

12. Improper use and Indemnity. Buyer shall indemnify, defend, and hold Seller harmless from any claim, liability, damages, lawsuits, and costs (including attorney fees), whether for personal injury, property damage, patent, trademark or copyright infringement or any other claim, brought by or incurred by Buyer, Buyer's employees, or any other person, arising out of: (a) improper selection, improper application or other misuse of Products purchased by Buyer from Seller; (b) any act or omission, negligent or otherwise, of Buyer; (c) Seller's use of patterns, plans, drawings, or specifications furnished by Buyer to manufacture Product; or (d) Buyer's failure to comply with these terms and conditions. Seller shall not indemnify Buyer under any circumstance except as otherwise provided.

13. Cancellations and Changes. Orders shall not be subject to cancellation or change by Buyer for any reason, except with Seller's written consent and upon terms that will indemnify, defend and hold Seller harmless against all direct, incidental and consequential loss or damage. Seller may change product features, specifications, designs and availability with notice to Buyer.

14. Limitation on Assignment. Buyer may not assign its rights or obligations under this agreement without the prior written consent of Seller.

15. Entire Agreement. This agreement contains the entire agreement between the Buyer and Seller and constitutes the final, complete and exclusive expression of the terms of the agreement. All prior or contemporaneous written or oral agreements or negotiations with respect to the subject matter are herein merged.

16. Waiver and Severability. Failure to enforce any provision of this agreement will not waive that provision nor will any such failure prejudice Seller's right to enforce that provision in the future. Invalidation of any provision of this agreement by legislation or other rule of law shall not invalidate any other provision herein. The remaining provisions of this agreement will remain in full force and effect.

17. Termination. This agreement may be terminated by Seller for any reason and at any time by giving Buyer thirty (30) days written notice of termination. In addition, Seller may by written notice immediately terminate this agreement for the following: (a) Buyer commits a breach of any provision of this agreement (b) the appointment of a trustee, receiver or custodian for all or any part of Buyer's property (c) the filing of a petition for relief in bankruptcy of the other Party on its own behalf, or by a third party (d) an assignment for the benefit of creditors, or (e) the dissolution or liquidation of the Buyer.

18. Governing Law. This agreement and the sale and delivery of all Products hereunder shall be deemed to have taken place in and shall be governed and construed in accordance with the laws of the State of Ohio, as applicable to contracts executed and wholly performed therein and without regard to conflicts of laws principles. Buyer irrevocably agrees and consents to the exclusive jurisdiction and venue of the courts of Cuyahoga County, Ohio with respect to any dispute, controversy or claim arising out of or relating to this agreement. Disputes between the parties shall not be settled by arbitration unless, after a dispute has arisen, both parties expressly agree in writing to arbitrate the dispute.

19. Indemnity for Infringement of Intellectual Property Rights. Seller shall have no liability for infringement of any patents, trademarks, copyrights, trade dress, trade secrets or similar rights except as provided in this Section. Seller will defend and indemnify Buyer against allegations of infringement of U.S. patents, U.S. trademarks, copyrights, trade dress and trade secrets ("Intellectual Property Rights"). Seller will defend at its expense and will pay the cost of any settlement or damages awarded in an action brought against Buyer based on an allegation that a Product sold pursuant to this Agreement infringes the Intellectual Property Rights of a third party. Seller's obligation to defend and indemnify Buyer is contingent on Buyer notifying Seller within ten (10) days after Buyer becomes aware of such allegations of infringement, and Seller having sole control over the defense of any allegations or actions including all negotiations for settlement or compromise. If a Product is subject to a claim that it infringes the Intellectual Property Rights of a third party, Seller may, at its sole expense and option, procure for Buyer the right to continue using the Product, replace or modify the Product so as to make it noninfringing, or offer to accept return of the Product and return the purchase price less a reasonable allowance for depreciation. Notwithstanding the foregoing, Seller shall have no liability for claims of infringement based on information provided by Buyer, or directed to Products delivered hereunder for which the designs are specified in whole or part by Buyer, or infringements resulting from the modification, combination or use in a system of any Product sold hereunder. The foregoing provisions of this Section shall constitute Seller's sole and exclusive liability and Buyer's sole and exclusive remedy for infringement of Intellectual Property Rights.

20. Taxes. Unless otherwise indicated, all prices and charges are exclusive of excise, sales, use, property, occupational or like taxes which may be imposed by any taxing authority upon the manufacture, sale or delivery of Products.

21. Equal Opportunity Clause. For the performance of government contracts and where dollar value of the Products exceed $10,000, the equal employment opportunity clauses in Executive Order 11246, VEVRAA, and 41 C.F.R. §§ 60-1.4(a), 60-741.5(a), and 60-250.4, are hereby incorporated.

01/09

Parker Hannifin Corporation
Instrumentation Products Division
Jacksonville, AL USA
http://www.parker.com/ipdus

Parker's Motion & Control Technologies

At Parker, we're guided by a relentless drive to help our customers become more productive and achieve higher levels of profitability by engineering the best systems for their requirements. It means looking at customer applications from many angles to find new ways to create value. Whatever the motion and control technology need, Parker has the experience, breadth of product and global reach to consistently deliver. No company knows more about motion and control technology than Parker. For further info call 1-800-C-Parker.

AEROSPACE

Key Markets
- Aircraft engines
- Business & general aviation
- Commercial transports
- Land-based weapons systems
- Military aircraft
- Missiles & launch vehicles
- Regional transports
- Unmanned aerial vehicles

Key Products
- Flight control systems & components
- Fluid conveyance systems
- Fluid metering delivery & atomization devices
- Fuel systems & components
- Hydraulic systems & components
- Inert nitrogen generating systems
- Pneumatic systems & components
- Wheels & brakes

CLIMATE CONTROL

Key Markets
- Agriculture
- Air conditioning
- Food, beverage & dairy
- Life sciences & medical
- Precision cooling
- Processing
- Transportation

Key Products
- CO^2 controls
- Electronic controllers
- Filter driers
- Hand shut-off valves
- Hose & fittings
- Pressure regulating valves
- Refrigerant distributors
- Safety relief valves
- Solenoid valves
- Thermostatic expansion valves

ELECTROMECHANICAL

Key Markets
- Aerospace
- Factory automation
- Life science & medical
- Machine tools
- Packaging machinery
- Paper machinery
- Plastics machinery & converting
- Primary metals
- Semiconductor & electronics
- Textile
- Wire & cable

Key Products
- AC/DC drives & systems
- Electric actuators, gantry robots & slides
- Electrohydrostatic actuation systems
- Electromechanical actuation systems
- Human machine interface
- Linear motors
- Stepper motors, servo motors, drives & controls
- Structural extrusions

FILTRATION

Key Markets
- Food & beverage
- Industrial machinery
- Life sciences
- Marine
- Mobile equipment
- Oil & gas
- Power generation
- Process
- Transportation

Key Products
- Analytical gas generators
- Compressed air & gas filters
- Condition monitoring
- Engine air, fuel & oil filtration & systems
- Hydraulic, lubrication & coolant filters
- Process, chemical, water & microfiltration filters
- Nitrogen, hydrogen & zero air generators

FLUID & GAS HANDLING

Key Markets
- Aerospace
- Agriculture
- Bulk chemical handling
- Construction machinery
- Food & beverage
- Fuel & gas delivery
- Industrial machinery
- Mobile
- Oil & gas
- Transportation
- Welding

Key Products
- Brass fittings & valves
- Diagnostic equipment
- Fluid conveyance systems
- Industrial hose
- PTFE & PFA hose, tubing & plastic fittings
- Rubber & thermoplastic hose & couplings
- Tube fittings & adapters
- Quick disconnects

HYDRAULICS

Key Markets
- Aerospace
- Aerial lift
- Agriculture
- Construction machinery
- Forestry
- Industrial machinery
- Mining
- Oil & gas
- Power generation & energy
- Truck hydraulics

Key Products
- Diagnostic equipment
- Hydraulic cylinders & accumulators
- Hydraulic motors & pumps
- Hydraulic systems
- Hydraulic valves & controls
- Power take-offs
- Rubber & thermoplastic hose & couplings
- Tube fittings & adapters
- Quick disconnects

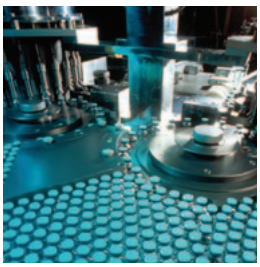

PNEUMATICS

Key Markets
- Aerospace
- Conveyor & material handling
- Factory automation
- Life science & medical
- Machine tools
- Packaging machinery
- Transportation & automotive

Key Products
- Air preparation
- Brass fittings & valves
- Manifolds
- Pneumatic accessories
- Pneumatic actuators & grippers
- Pneumatic valves & controls
- Quick disconnects
- Rotary actuators
- Rubber & thermoplastic hose & couplings
- Structural extrusions
- Thermoplastic tubing & fittings
- Vacuum generators, cups & sensors

PROCESS CONTROL

Key Markets
- **Chemical & refining**
- **Food, beverage & dairy**
- **Medical & dental**
- **Microelectronics**
- **Oil & gas**
- **Power generation**

Key Products
- **Analytical sample conditioning products & systems**
- **Fluoropolymer chemical delivery fittings, valves & pumps**
- **High purity gas delivery fittings, valves & regulators**
- **Instrumentation fittings, valves & regulators**
- **Medium pressure fittings & valves**
- **Process control manifolds**

SEALING & SHIELDING

Key Markets
- Aerospace
- Chemical processing
- Consumer
- Energy, oil & gas
- Fluid power
- General industrial
- Information technology
- Life sciences
- Military
- Semiconductor
- Telecommunications
- Transportation

Key Products
- Dynamic seals
- Elastomeric o-rings
- EMI shielding
- Extruded & precision-cut, fabricated elastomeric seals
- Homogeneous & inserted elastomeric shapes
- High temperature metal seals
- Metal & plastic retained composite seals
- Thermal management

Parker

ENGINEERING YOUR SUCCESS.

Sales Offices Worldwide

Parker Hannifin Corporation
Instrumentation Products Division
1005 A Cleaner Way
Huntsville, AL 35805
USA
phone 256 881 2040
fax 256 8815072
www.parker.com/ipdus

Parker Hannifin Corporation
Instrumentation Products Division
2651 Alabama Highway 21 North
Jacksonville, AL 36265-9681
USA
phone 256 435 2130
fax 256 435 7718
www.parker.com/ipdus

Parker Hannifin Corporation
Instrumentation Products Division
6575 Tram Road
Beaumont, TX 77713
USA
phone 409 924 0300
fax 409 924 0301
www.parker.com/ipdus

Parker Hannifin plc
Instrumentation Products Division
Riverside Road
Pottington Business Park
Barnstaple, Devon EX31 1NP
England
phone +44 0 1271 313131
fax +44 0 1271 373636
email ipd@parker.com
www.parker.com/ipd

Parker Hannifin Corporation
Instrumentation Products Division
2651 Alabama Highway 21 North
Jacksonville, AL 36265-9681
phone 256 435 2130
fax 256 435 7718
www.parker.com/ipdus

Authorized Distributor
MONILEK OILFIELD
E: sales@monilek.com
W: www.monilekgroup.com