Authorized Distributor
MONILEK OILFIELD

E: sales@monilek.com
W: www.monilekgroup.com

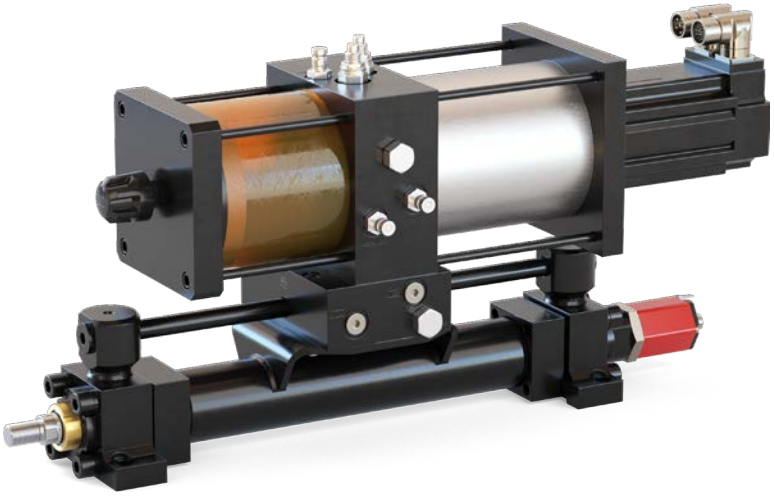

Hybrid Actuation System Cylinders

Series HAS 500

ENGINEERING YOUR SUCCESS.

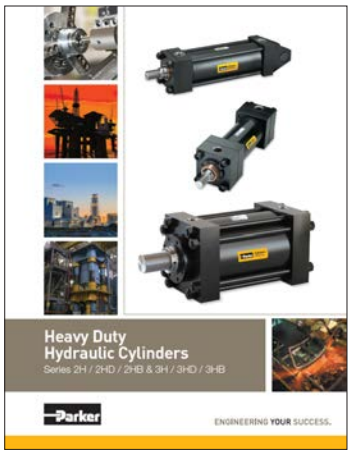

HY08-1314

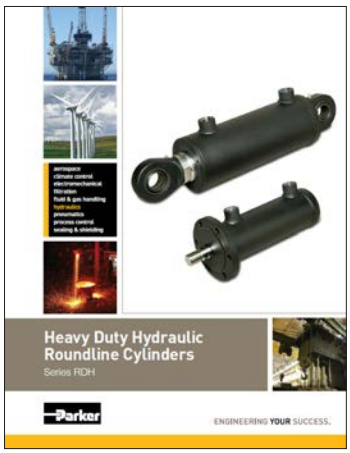

HY08-1320

HY08-1175

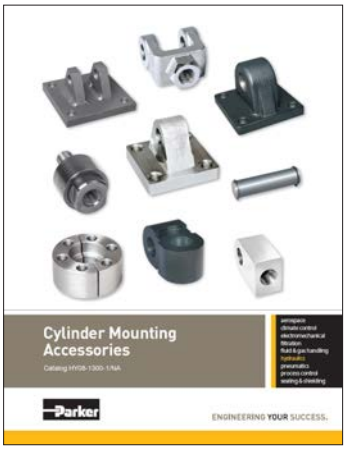

HY08-1300

HY08-0991

HY08-1132

In line with our policy of continuing product improvement, specifications and information contained in this catalog are subject to change.
Copyright ©2023 by Parker Hannifin Corporation. All rights reserved. U.S Patent No. 10,344,779
PRINTED IN THE U.S.A.

⚠WARNING

FAILURE OR IMPROPER SELECTION OR IMPROPER USE OF THE PRODUCTS AND/OR SYSTEMS DESCRIBED HEREIN OR RELATED ITEMS CAN CAUSE DEATH, PERSONAL INJURY AND PROPERTY DAMAGE.

This document and other information from the Parker Hannifin Corporation, its subsidiaries and authorized distributors provide product and/or system options for further investigation by users having expertise. It is important that you analyze all aspects of your application, including consequences of any failure and review the information concerning the product or system in the current product catalog. Due to the variety of operating conditions and applications for these products or systems, the user, through its own analysis and testing, is solely responsible for making the final selection of the products and systems and assuring that all performance, safety and warning requirements of the application are met.

The products described herein, including without limitation, product features, specifications, designs, availability and pricing, are subject to change by Parker Hannifin Corporation and its subsidiaries at any time without notice.

Offer of Sale

The items described in this document are hereby offered for sale by Parker Hannifin Corporation, its subsidiaries or its authorized distributors. This offer and its acceptance are governed by provisions stated on a separate page of the document entitled 'Offer of Sale'.

⚠PROP 65 WARNING

Warning: This product can expose you to chemicals including **Lead and Lead Compounds** which are known to the State of California to cause cancer and birth defects or other reproductive harm. For more information go to www.P65Warnings.ca.gov

Table of Contents

Newest Design Features of the HAS 500 Cylinders pages 6-9

Overview — Series HAS 500 pages 6-11

HAS Model Code / How To Order 10-11

A Overview

Section B: Power Pack pages 12-30

Pumps 12
Industrial AC Motors
Motion Options 13
AC Modular Drives
Modular Drive Systems 14
Connections 15
Modes of Operations 16-17
Network Architecture 18-19
Mobile DC Motors
Motion Options . . . . . 20 & 23
Inverter System 21-22
PWM Controller 24
Non-Parker Motor Adapters 25
Hydraulic Circuits 26-27
Reservoir Construction 28
Parker DuraClean™ Fluid 29
Power Pack Placement 30

B Power Pack

Section C: Accessories pages 31-35

Heat Exchangers 31-32
Bleed Orifices 33
Option Package Locations 34
Sensors 35

C Accessories

Section D: Cylinder pages 36-57

Cylinder Styles 36
Application Checklist 37
Mounting Style Tips 38
HS2 / HS3 39
Mounting Options 40
Rod End Details 41-42
How to Order 43-44
HS2 / HS3 (continued)
Weights 45
Mounting Dimensions 46
HS2X / HS3X 47
How to Order 48-50
HSR 51
Mounting Options 52
How to Order 53-54
Weights 55
Mounting Dimensions 56
Selecting Your Hybrid Actuator 57

D Cylinder

Section E: Sizing pages 58-66

Determining Cylinder Thrust 58-59
Selecting Your Hybrid Actuator 60
Determining Flow Requirements 61-64
Drive / Inverter Selection Charts 65-66

E Sizing

Application Worksheet 67
Cylinder Safety Guide 68
Offer of Sale 70

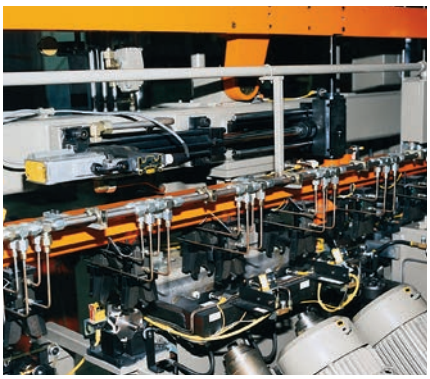

Parker Hannifin is a Fortune 250 global leader in motion and control technologies. For more than 100 years the company has engineered the success of its customers in a wide range of diversified industrial and aerospace markets. Learn more at www.parker.com or @parkerhannifin.

Parker is Engineering

Fluid Power and application expertise provide customers the opportunity to use us as an extension of their design teams. From new system design to improvements required for existing applications, Parker offers unparalleled engineering expertise. We'll help you develop cost saving, high performance solutions that provide value through increased productivity, improved machine efficiency, and reduced downtime.

Our design engineers utilize the highest quality materials and cutting edge manufacturing processes available to push the envelope for performance, value and reliability.

Parker components and systems are made to last. We offer complete system solutions for the following industries:

- Plastics
- Metal Forming
- Steel
- Press
- Off Shore Oil
- Forestry
- Mining
- Entertainment
- Flight Simulation
- Fatigue Testing
- Automation

Worldwide Supplier to Industrial Markets

Parker Hannifin is the world's leading supplier of motion and control technologies that include; motion control products, systems, and complete engineered solutions for industrial markets. Parker's broad and extensive breadth of product offer single source capability with limitless possibilities. Our industrial product solutions range from state of the art stand-alone components to complete engineered systems that are designed to provide value and efficiency to all of our customers. Each component and system is backed up with superior application expertise and technical support that you would expect from Parker Hannifin.

Manufacturing Locations

221 Helicopter Circle • Corona, CA 92880 • Tel.: (951) 280-3800
Fax: (951) 280-3808 • Fax: (800) 869-9886

715 South Iroquois Street • Goodland, IN 47948
Tel.: (219) 297-3182 • Fax: (800) 328-8120

1300 Six Flags Road • Lithia Springs, GA 30122
Tel.: (770) 819-3400 • Fax: (800) 437-3498

29289 Airport Road • Eugene, OR 97402-0079
Tel.: (541) 689-9111 • Fax: (541) 688-6771 • Fax: (800) 624-7996

900 Plymouth Road • Plymouth, MI 48170
Tel.: (734) 455-1700 • Fax: (734) 455-1007

20138 Interstate 30 N • Benton, AR 72019-8019
Tel.: (501) 794-5000 • Fax: (501) 794-0732

HAS Hybrid Actuation System

Parker Hannifin Corporation has developed a hybrid actuation system (HAS) that is ideal for linear motion applications, suitable for both mobile and industrial markets.

The new hybrid design combines the controllability of electromechanical actuators with the power density, longer life, and resistive force capabilities of a traditional hydraulic system. The result is an all-in-one actuation system that eliminates the screw wear points commonly found in electromechanical cylinders and the need for a hydraulic power unit, hoses and valving.

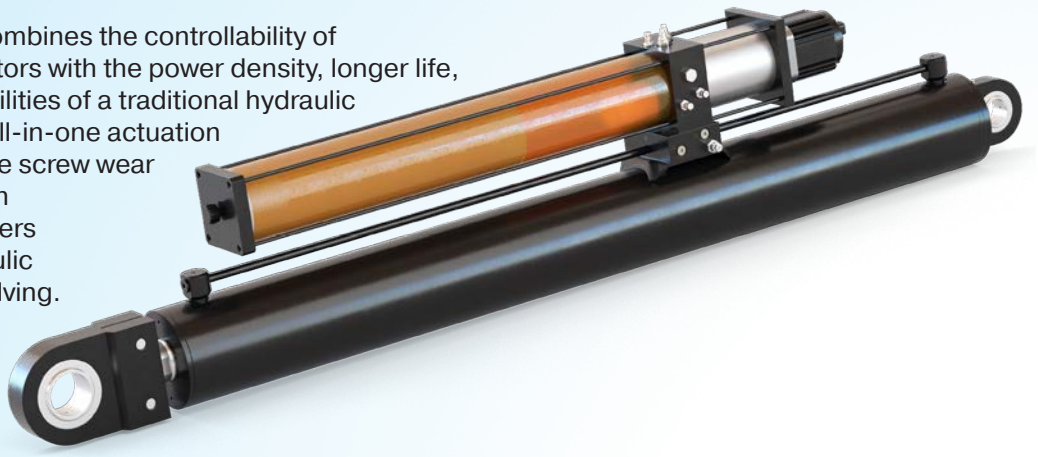

Plug and Play

Ease of use is at the core of this design — from selection to controllability — Parker's HAS has you covered.

More efficiency, less maintenance

This high-efficiency, modular system allows for various traditional cylinder mounting configurations and stroke lengths. Offered in our series HS2 NFPA mounting and series HSR roundline cylinder design. The hybrid design is a fully self-contained system with no hydraulic hoses or external power units. The units come completely flushed and filled with Parker's DuraClean™ premium hydraulic fluid, maintenance-free operations up to and beyond 8000 hours.

The design offers clear advantages over comparable electromechanical actuator (EMA) systems because all the internal wear items are permanently lubricated for extended life. The power density of HAS is typically three times that of a comparable electric cylinder.

Innovative

Reliable field-proven components provide unparalleled power density.

Our sealed reservoir allows integration into the toughest of environments without the worry of ingesting contaminates.

Operation is hydrostatic — direction is controlled by reversing the motor rotation, speed is controlled by limiting the motor's RPMs. Return oil is directed to the pump inlet, eliminating the need for large, bulky reservoirs. No fittings, flow tube design with elastomer seals.

Eliminating valving and on-demand operations provides optimum efficiency and control at your fingertips.

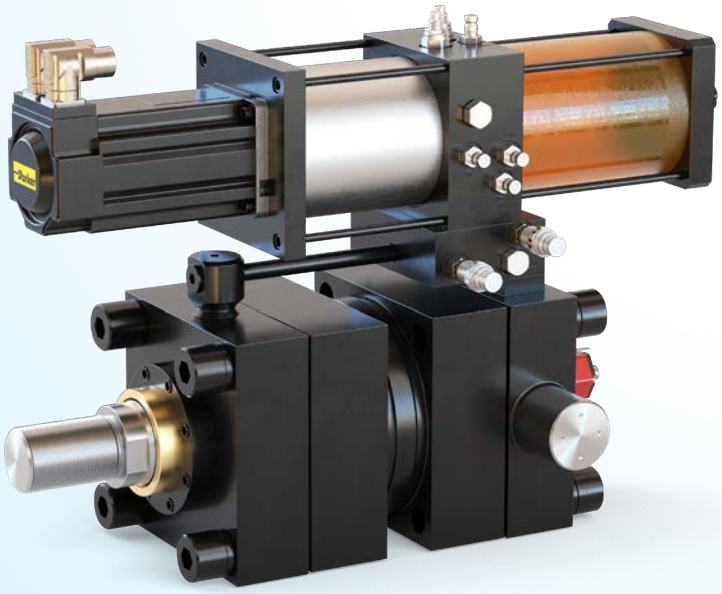

The Next Step in Energy Efficient Hydraulics

Reducing pressure drops, improves efficiency

Centralized Approach

Traditional hydraulic systems utilize a central power unit to supply hydraulic power to actuators on the machine. These units are designed with AC inductance electric motors. With average loading such motors are 87% efficient. Pump losses are an additional 15%.

Power units operate continuously at steady state RPM. Directional and flow control valves are used to control actuators. To offer speed control on the fly, designers will use proportional valves. These valves sacrifice pressure drop for controllability. All these losses are turned to heat, requiring the use of either air or water based cooling systems adding cost and maintenance.

These losses add up to 53% wasted energy plus the added expense in removing this energy, (heat) from the system. The power unit runs continuously, so even during dwell or idle periods energy is being consumed and turned to heat, illustrated in the chart below resulting in an average loss of 36% for the complete cycle.

Localized Approach

Direction and speed are controlled by rotation of the pump, instead of directional and flow control devices.

Switching motor technology over to permanent magnet motor (PMAC), we gain full torque down to zero speeds, and ability to operate at speeds upward of 4000 RPM fully capitalizing on the pump speed rating. This range allows the HAS units to be fitted with smaller frame pumps, which reduce torque requirements to do the same work of an induction designed motor.

PMAC motors are typically 70% smaller than comparable induction motors, with quick acceleration for actuator control.

Localizing the power and controlling the actuator On Demand, average energy wasted per cycle is reduced to a mere 9%, 27% savings as illustrated in Energy Consumed chart.

Additional savings can be gained by eliminating the heat exchanger and electric power to run the fan or cooling water.

Centralized Proportional Hydraulic System

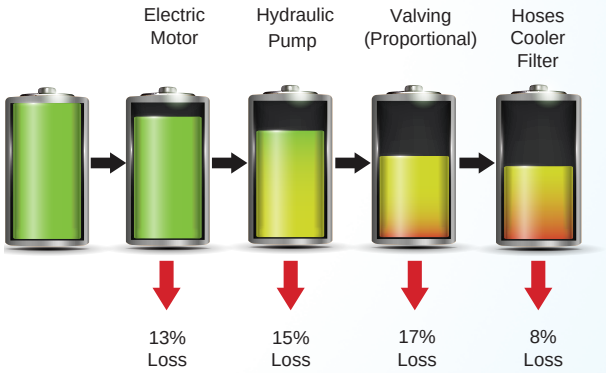

47% of Input Power available for work

Energy Consumed

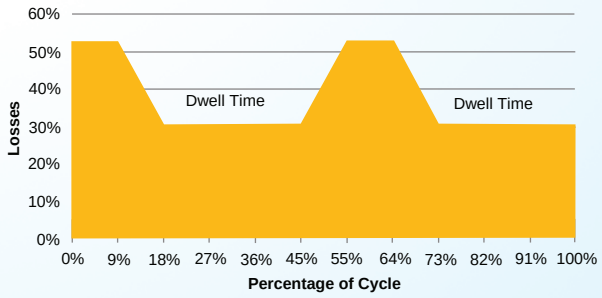

Losses for a 33% duty cycle actuator

Localized Power HAS Actuator

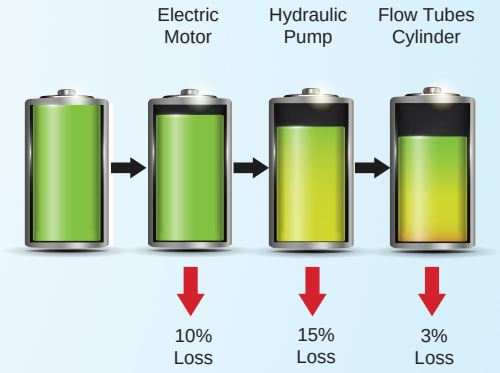

72% of Input Power available for work

Energy Consumed

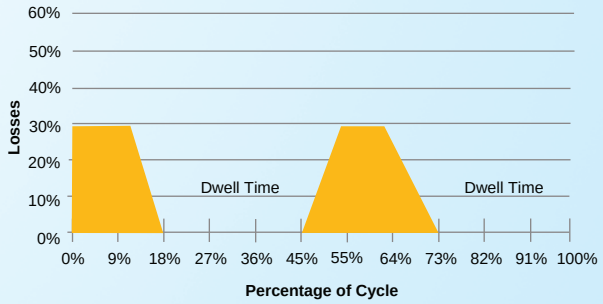

Losses for a 33% duty cycle actuator

The inside story on why the Hybrid Actuator i

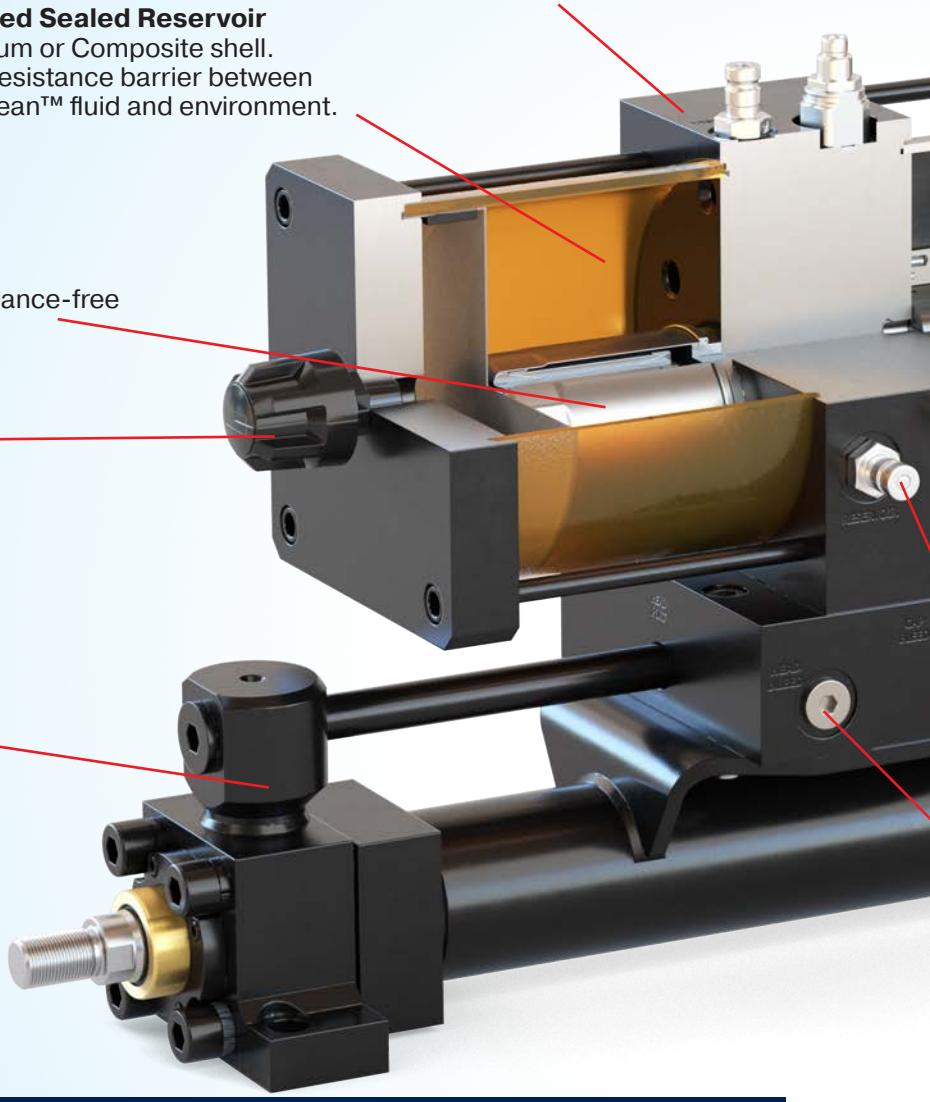

Product Features

- Simple speed, direction and force control via analog inputs or serial bus communications.
- 230/460V AC, 24-48V DC power options.
- No hydraulic lines or power unit needed, self-contained complete system.
- Flushed clean to ISO 16/14/11 and filled with fluid for maintenance-free operation.
- Chrome Plated Rod standard. Global Shield and Stainless also available. (HY08-4000-B2)
- Load Holding options include Counterbalance and PO check valves.
- Modular system allows for various traditional cylinder mounting styles and stroke lengths.
- Available in NFPA Mounting configuration (HS2), with continuous feedback devices (HS2X) and Round line construction (HSR).
- Crown wiper for harsh dirty environment to ensure fluid integrity.

's your best choice in Plug and Play Actuation

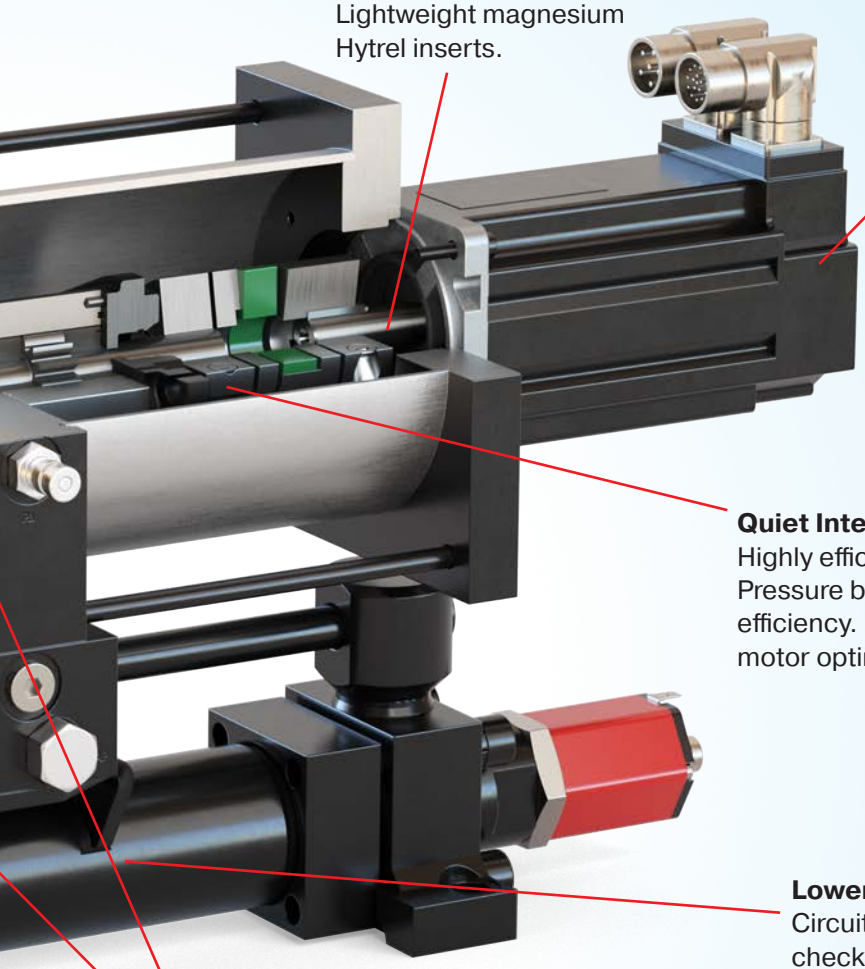

Flexible Drive Couplings
Lightweight magnesium Hytrel inserts.

Full Range of Motors
AC and DC motor voltages.

Quiet Integral Pump
Highly efficient, 13 tooth gear pump Pressure balanced for optimum efficiency. (10) displacements for motor optimization.

Lower Manifold
Circuit manifold for Counterbalance or PO check load holding options. Other customized options available upon request.

Optional Configurations
Heat exchanger ports for high temp applications.

Other Highlights

- NFPA Construction (HS2/HS3) or Roundline welded construction HSR
- No fixed stroke or mounting limitation
- Proportional speed and force limiting control standard with hybrid design
- Drive control cylinder (DCC) technology
- Linear position feedback or end of stroke measurement sensors available

Shown mounted to a HS2X base cylinder.

A
Overview

Series HAS Code

G09	30	30	A11E	1	P	P
Pumps Page 12	Push Relief Pressure	Pull Relief Pressure	Adapter / Motors Pages 13-25	Motor	Circuit Push Page 26	Circuit Pull Page 27

G03 = 0.18 CI/REV (3 CC) 4000 RPM
G04 = 0.24 CI/REV (4 CC) 4000 RPM
G05 = 0.31 CI/REV (5 CC) 4000 RPM
G06 = 0.37 CI/REV (6 CC) 3600 RPM
G07 = 0.43 CI/REV (7 CC) 3300 RPM
G08 = 0.49 CI/REV (8 CC) 3000 RPM
G09 = 0.55 CI/REV (9 CC) 2900 RPM
G10 = 0.61 CI/REV (10 CC) 2800 RPM
G11 = 0.67 CI/REV (11CC) 2500 RPM
G12 = 0.73 CI/REV (12 CC) 2400 RPM

Push/Pull Relief Pressure divided by 100
e.g. 30 = 3000 PSI Setting
05 = 500 PSI Setting

Range: 500 to 3100 PSI
Select for both Push and Pull

A09A = MTR, PMAC, MPP0921C (240VAC) 0.8 HP, IP65
A09B = MTR, PMAC, MPP0921R (460VAC) 0.8 HP, IP65
A09C = MTR, PMAC, MPP0922D (240VAC) 1.65 HP, IP65
A09D = MTR, PMAC, MPP0922R (460VAC) 1.65 HP, IP65
A09E = MTR, PMAC, MPP0923D (240VAC) 2 HP, IP65
A09F = MTR, PMAC, MPP0923R (460VAC) 2 HP, IP65
A10A = MTR, PMAC, MPP1002D (240VAC) 2 HP, IP65
A10B = MTR, PMAC, MPP1002R (460VAC) 2.49 HP, IP65
A10C = MTR, PMAC, MPP1003C (240VAC) 2.4 HP, IP65
A10D = MTR, PMAC, MPP1003R (460VAC) 2.5HP, IP65
A11A = MTR, PMAC, MPP1152D (240VAC) 2.2 HP, IP65
A11B = MTR, PMAC, MPP1152R (460VAC) 2 HP, IP65
A11C = MTR, PMAC, MPP1153C (240VAC) 3 HP, IP65
A11D = MTR, PMAC, MPP1153R (460VAC) 3 HP, IP65
A11E = MTR, PMAC, MPP1154B (240VAC) 3.6 HP, IP65
A11F = MTR, PMAC, MPP1154P (460VAC) 3.6 HP, IP65
A14B = MTR, PMAC, MPP1422R (460VAC) 4.5 HP, IP65
A14D = MTR, PMAC, MPP1424R (460VAC) 7 HP, IP65
A14F = MTR, PMAC, MPP1426P (460VAC) 8.4 HP, IP65
A14G = MTR, PMAC, MPP1428Q (460VAC) 9.4 HP, IP65
D09A = MTR, PMAC-Brushless, 24V, 2 HP, IP56
D09B = MTR, PMAC-Brushless, 36V, 2 HP, IP56
D09C = MTR, PMAC-Brushless, 48V, 2 HP, IP56
D12A = MTR, PMAC-Brushless, 24V, 2.5 HP, IP56
D12B = MTR, PMAC-Brushless, 36V, 2.5 HP, IP56
D12C = MTR, PMAC-Brushless, 48V, 2.5 HP, IP56
F17A = MTR, PMDC-Brush, 12-48V, 4 HP Cont, Open
X00X = Other

1 = Included
X = Fitted Only

C = Counterbalance Valve 3:1 Ratio 1000-4000 PSI Range (3000 PSI Setting)

L = Load Match Counterbalance Valve Factory Setting: 4000 PSI

P = Pilot Operated Check 3:1 Ratio

R = Pilot Operated Check 3:1 Ratio with manual release

N = Open, no load holding

X = Other (specify)

Select for both Push and Pull

Model code selection for the HAS Power Pack for cylinder type and model selection, see pages 34 for HS2 and 40 for HSR.

⚠ PROP 65 WARNING **WARNING:** This product can expose you to chemicals including Lead and Lead Compounds which are known to the State of California to cause cancer and birth defects or other reproductive harm. For more information go to www.P65Warnings.ca.gov

Series HAS Code

A	D	B	1	N	0	H	S
Reservoir Page 28	Fluid Page 29	Orientation Page 30	Power Pack Position	Heat Exchanger Page 31-32	Heat Exchanger Hose Length	Filter Page 33	Option Packages Pages 34-35

A = Aluminum
X = Other

D = Duraclean™
E = EscoSafe FR-46
K = Kendal Blue
X = Other

A = Centered Reservoir Cap End
B = Centered Reservoir Head End
C = Cap Manifold Reservoir Head End
D = Detached Power Pack, only available when ordered with cylinder
H = Head Manifold Reservoir Cap End
J = Special Placement (consult factory)
X = Other

1
2
3
4
X = Other

N = None
A = Air/Oil -12V DC Motor
B = Air/Oil -24V DC Motor
W = Plate Style Water Cooler
X = Other

Enter 0 to Omit
1-9 length in meters

N = None
C =Push Port Bleed Orifice 0.020"
H = Pull Port Bleed Orifice 0.020"
B = Both Port Bleed Orifice 0.020"
J = Push 0.035" Orifice, 24 V NO Solenoid
K = Pull 0.035" Orifice, 24 V NO Solenoid
L = Both 0.035" Orifice, 24 V NO Solenoid
M = Push 0.049" Orifice, 24 V NO Solenoid
P = Pull 0.049" Orifice, 24 V NO Solenoid
R = Both 0.049" Orifice, 24 V NO Solenoid
X = Other

D = Diagnostic Couplers each side
E = Diagnostic Couplers right side
F = Diagnostic Couplers left side
P = Sensor Package - Industrial, sensors on each side
R = Sensor Package - Industrial, sensors on right side
S = Sensor Package - Industrial, sensors on left side
T = Sensor Package - Mobile (IQAN), sensors on each side
U = Sensor Package - Mobile (IQAN), on right side
W = Sensor Package - Mobile (IQAN), on left side
X = Other

⚠ **PROP 65 WARNING** **WARNING:** This product can expose you to chemicals including Lead and Lead Compounds which are known to the State of California to cause cancer and birth defects or other reproductive harm. For more information go to www.P65Warnings.ca.gov

HAS Pumps 500 Series

- **High Performance**
- **High Efficiency**
- **High Pressure Operation**

HAS Actuators G series gear pumps/motors are an advanced performance version of the international "bushing block" PGP style pumps. HAS G series pumps offer superior performance, high efficiency and low noise operation at high operating pressures.

G Series

Advantages

- **Up to 207 bar (3000 psi) continuous operation**
  High strength materials and large journal diameters provide low bearing loads for high pressure operation.
- **Low noise**
  13 tooth gear profile
- **High efficiency**
  Pressure balanced bearing blocks assure maximum efficiency under all operating conditions.

Fluid Operating Temperature	
Kendal Blu (2300 RPM Max)	-40C (-40F) to + 54C (130F)
DuraClean™	-11C (12F) to +75 C (167 F)
EcoSafe FR-46	-13C (9F) to +85C (185F)
HAS Static Seals	-23C (-10F) to -29C (-20F) to +93C (165F)

HAS 500 Pump Specifications (Consult factory for motors not listed)

Specifications	Order Code	G03	G04	G05	G06	G07	G08	G09	G10	G11	G12
Displacements	in^3/rev	0.18	0.24	0.31	0.37	0.43	0.49	0.55	0.61	0.67	0.73
	cm^3/rev	3	4	5	6	7	8	9	10	11	12
Continuous Pressure	Bar	207	207	207	207	207	207	207	207	207	207
	PSI	3000	3000	3000	3000	3000	3000	3000	3000	3000	3000
Minimum Speed @ Max. Outlet Pressure	rpm	500	500	500	500	500	500	500	500	500	500
Maximum Speed @ 0 Inlet & Max. Outlet Pressure	rpm	4000	4000	4000	3600	3300	3000	2900	2800	2400	2400
Flow at Max Speed - 1500 PSI	GPM	2.6	3.5	4.6	4.9	5.2	5.4	5.9	6.3	5.9	6.4
Required Torque (inch-lbs)	1000 PSI	33.7	44.9	58.0	69.3	80.5	91.7	103.0	114.2	125.5	136.7
	2000 PSI	67.4	89.9	116.1	138.6	161.10	183.5	206.0	228.4	250.9	273.4
	3000 PSI	101.1	134.8	174.1	207.8	241.5	275.2	308.9	342.7	376.4	410.1

⚠ **PROP 65 WARNING** **WARNING:** This product can expose you to chemicals including Lead and Lead Compounds which are known to the State of California to cause cancer and birth defects or other reproductive harm. For more information go to www.P65Warnings.ca.gov

Motion Options - AC Power

High Power Low Inertia Permanent Magnet AC motors

The "MaxPlusPlus" (MPP) "A" series of brushless servo motors from Parker features a new design that offers lower inertia and higher power, all in a smaller motor package. Utilizing eight-pole segmented lamination technology, the MPP produces more torque in a smaller package.

The MPP motors feature segmented core technology, which can yield up to 40% higher torque per unit size than conventionally wound servo motors. "Potted" stators improve heat transfer for better thermal efficiency, resulting in increased torque at the motor shaft. High-energy neodymium magnets are employed for higher rates of acceleration.

Available in either 230 or 460 voltages.

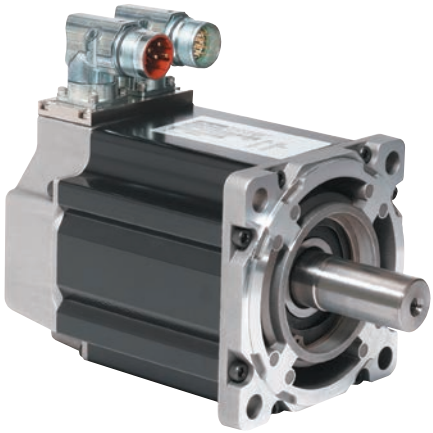

A series (MPP) Motor Features

- Brushless construction, Neodymium magnets
- High torque-to-inertia ratio — 40% higher torque
- Potted stator design for improved thermal efficiency
- Resolver feedback
- Thermistor temperature protection
- Right angle, rotatable connectors
- IP65 environmental rating
- CE and UL approvals

General Specifications

Max Bus Volts (230 VAC)	340	VDC
Max Bus Bolts (460 VAC)	650	VDC
Ambient Temp at Rating	25	^{0}C
Max Winding Temp	155	^{0}C
Number of Poles	8	
UL Class	H	
Rating	IP65	

B Power Pack

Specifications (Consult factory for motors not listed)

Part No.		A09E	A09F	A10C	A10D	A11E	A11F	A14D	A14G
Model No.		MPP0923D	MPP0923R	MPP1003C	MPP1003R	MPP1154B	MPP1154P	MPP1424R	MPP1428Q
Voltage		230V	460V	230V	460V	230V	460V	460V	460V
Related Power	kW	1.55	1.55	1.77	1.86	2.69	2.69	5.21	7.01
	HP	2.07	2.07	2.36	2.49	3.59	3.59	6.95	9.3
Constant Torque	Nm	4.03	4.02	6.03	6.34	9.86	9.85	19.26	33.11
	Inch-Lbs	35.6	35.6	53.4	56.1	87.3	87.2	170.4	293
Peak Torque	Nm	11.55	11.54	17.25	17.97	28.04	28.01	52.31	94.04
	Inch-Lbs	102.2	102.1	152.67	159	248.2	247.9	463	832.2
Constant Current	Amps	7.2	3.6	7.2	5.4	10.7	5.4	12.1	21
Peak Current	Amps	22.8	11.4	22.8	17.2	33.91	16.9	38.34	66.46
Rated Speed	RPM	4947	4947	4153	4178	3852	3839	3780	2924
Torque Constant (Kt)	Nm/ A_{RMS}	0.561	1.123	0.842	1.174	0.924	1.848	1.61	1.591
Motor Weight	lbs	10.12	10.12	12.1	12.1	18.92	18.92	38.72	55.88
Recommended Drive	Std duty	0991760101***	0991760201***	0991760101***	0991760211***	0991760121***	0991760211***	0991760302***	0991760312***
	Heavy Duty	0991760111***	0991760211***	0991760111***	0991760221***	0991760131***	0991760221***	0991760312***	0991760322***

⚠ **PROP 65 WARNING** **WARNING:** This product can expose you to chemicals including Lead and Lead Compounds which are known to the State of California to cause cancer and birth defects or other reproductive harm. For more information go to www.P65Warnings.ca.gov

Modular Drive Systems for AC Motors (Series "A")

AC890 Systems Drive

Features

Versatile Communications

- Ethernet/IP
- Modbus/TCP
- CANopen
- Profibus-DP
- Profinet/IO
- EtherCAT
- DeviceNet
- ControlNet

Ultra-fast control loops
- Torque loop: 62.5µs
- Speed loop: 62.5µs

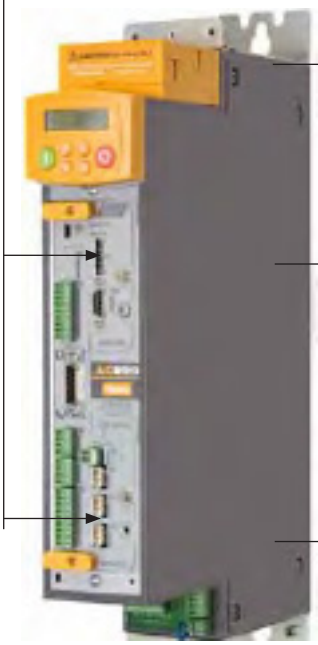

Benefits

SIL 3 Certified - **Integrated safety functionality**

The integrated Safe Torque Off (STO) functionality offers protection against unexpected motor start-up, in accordance to EN13849-1 PLe, SIL 3 as standard.

Minimal delay between fieldbus setpoints and the control loops

Designed to integrate in existing automation systems, the AC890 features high performance ports linked directly to the fast control loops of the drive. Minimum delay exists between your digital setpoint sent through a fieldbus and the control loops.

Open standards for protection of investment

The AC890 has been specifically designed to integrate seamlessly into your automation network. To connect to your PLC or fieldbus network you can simply choose from the wide range of communication technology boxes.

Example: **0991760112-25 00-A10C-A**

High amperage drive for an A10C motor, 25 feet cables, programmed for basic speed and direction control via discrete and analog inputs.

Cable Current Ratings: 0991760 **1 or 0991760 **2
1 = 20 Amp Max (P3B1)
2 = 30 Amp Max (P4B1)

How to Order Drive Kits

0991760* - XX XX - XXXX-A**

Base Drive

Cable Length
-10 = 10 FT
-15 = 15 FT
-25 = 25 FT
-50 = 50 FT

Communications
00 = Analog / Discrete
IP = Ethernet IP
IM = Modbus TCP

Motor Configuration
A09E = MPP0923D (240VAC)
A09F = MPP0923R (460VAC)
A10C = MPP1003C (240VAC)
A10D = MPP1003R (460VAC)
A11E = MPP1154B (240VAC)
A11F = MPP1154P (460VAC)
A14D = MPP1424R (460VAC)
A14G = MPP1428Q (460VAC)

Drive kits include preprogrammed drive, power cable, feedback cable and DB15 breakout module for feedback connection.

Drive Kit Number	Common Options		Drive Amps	Voltage	Drive Part No
	Cable Length	Communications			
0991760132	-10 = 10 Feet -15 = 15 Feet -25 = 25 Feet -50 = 50 Feet	-00 = Analog/Discrete -IP = Ethernet IP -IM = Modbus TCP -CT = EtherCat	30	230	890SD/2/0030C/B/00/A/US
0991760122			24	230	890SD/2/0024C/B/00/A/US
0991760111			12	230	890SD/2/0016B/B/00/A/US
0991760101			8	230	890SD/2/0011B/B/00/A/US
0991760322			29	460	890SD/5/0039D/B/00/A/US
0991760312			25	460	890SD/5/0030C/B/00/A/US
0991760302			20	460	890SD/5/0024C/B/00/A/US
0991760221			10	460	890SD/5/0016B/B/00/A/US
0991760211			6	460	890SD/5/0010B/B/00/A/US
0991760201			4	460	890SD/5/0006B/B/00/A/US

⚠ PROP 65 WARNING **WARNING:** This product can expose you to chemicals including Lead and Lead Compounds which are known to the State of California to cause cancer and birth defects or other reproductive harm. For more information go to www.P65Warnings.ca.gov

Connection Diagram

PART NO. 0991760 *- 00-****

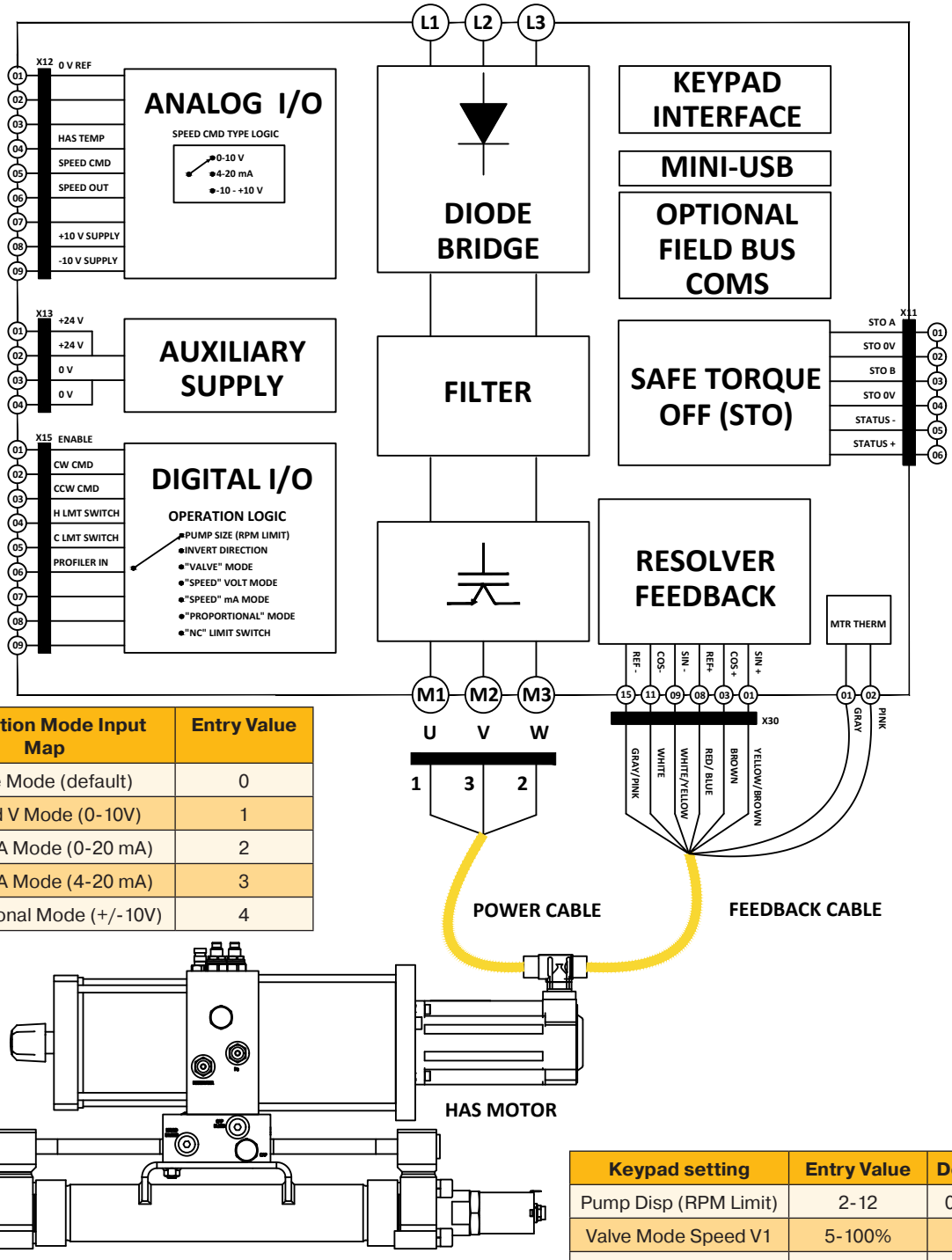

Operation Mode Input Map	Entry Value
Valve Mode (default)	0
Speed V Mode (0-10V)	1
Speed A Mode (0-20 mA)	2
Speed A Mode (4-20 mA)	3
Proportional Mode (+/-10V)	4

Keypad setting	Entry Value	Default Value
Pump Disp (RPM Limit)	2-12	0 (500 RPM)
Valve Mode Speed V1	5-100%	50%
Profiler Speed V2	5-100%	25%
Acel Rate R1	0.1 - 3.0 sec	0.3 sec
Decel Rate R2	0.1 - 3.0 sec	0.3 sec
Limit Switch NC	T/F	F
Invert Direction	T/F	F

PROP 65 WARNING **WARNING:** This product can expose you to chemicals including Lead and Lead Compounds which are known to the State of California to cause cancer and birth defects or other reproductive harm. For more information go to www.P65Warnings.ca.gov

Simple Valve style operations without use of valves

Drive Controlled Cylinder

Drive Controlled Cylinder (DCC) is a revolutionary way of controlling your actuators. It provides a highly efficient means of actuator control, ordered with matched drive, simple pre-programmed valve style routines are available without the use of energy consuming valving.

No programming needed, simple keypad setup and discrete/analog inputs for various types of operation.

End of Stroke Limit Switches

Standard with all Drive Kits is the ability to prevent over travel by incorporating end of stroke inputs. These inputs can be configured for normally open or normally closed switch types. Connections are at X15-04 (head end) and X15-05 (cap end). If no switches are used, default setting of NO switch should be selected.

Electronic Flow Control

Similar to cylinder operation with standard 4-way directional control valves, this simple operational mode allows direction control of the HAS actuator with simple push, pull discrete inputs. Direction is set by inputs X15-02 and X15-03, with speed in either direction set by V1 in keypad menu.

Program Features built into order code 00 Analog/Discrete Communication options

Valve Mode

Similar to cylinder operation with standard 4-way directional control valves, this simple operational mode allows direction control of the HAS actuator with simple push, pull discrete inputs. Direction is set by inputs X15-02 and X15-03, with speed in either direction set by V1 in keypad menu.

Adjustable Speed

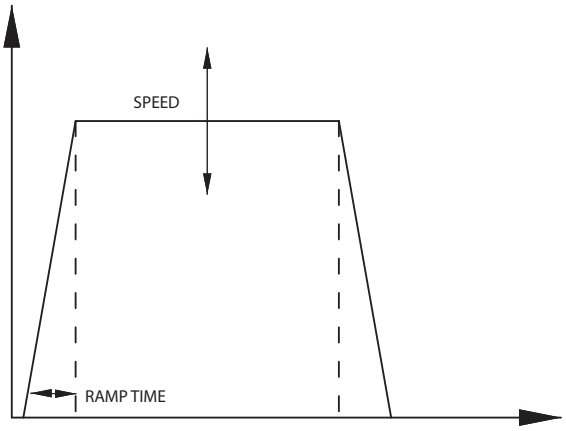

Soft Shift Variance

Standard Ramp Time on Valve Mode is 300 mS for both acceleration and deceleration rates. These values may be increased individually for applications requiring “soft-shift” control allowing a smoother ramp to desired speed eliminating system shock. Keypad entry for Acceleration is R1, and Deceleration is R2.

Adjustable Ramp Rates

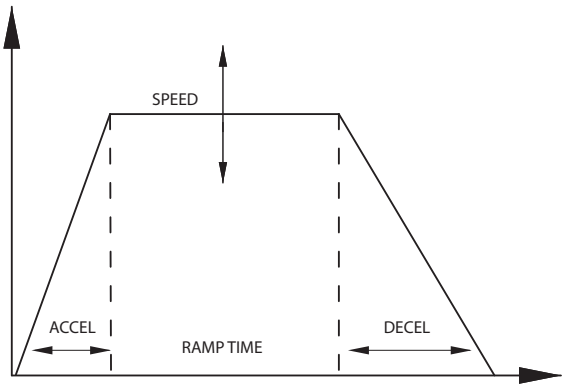

⚠ **PROP 65 WARNING** **WARNING:** This product can expose you to chemicals including Lead and Lead Compounds which are known to the State of California to cause cancer and birth defects or other reproductive harm. For more information go to www.P65Warnings.ca.gov

Motion Profiler Variant

Two speed operation Motion Profiler Mode is available, when activated speed will be reduced to a preset rate, adjustable by the keypad located on the drive.

Select Valve Mode 0, and wire secondary speed input to X15-06. Direction is set by inputs X15-02 and X15-03, with main speed set by V1, and secondary speed set by V2 in the keypad entry. Acceleration (R1) and Deceleration (R2) values are also used.

Common applications for this would be a high speed approach, with slow down, adjustable cylinder "cushion" control. Also useful as a reduced jog speed control for setup and manual operation.

Motion Profiler Diagram

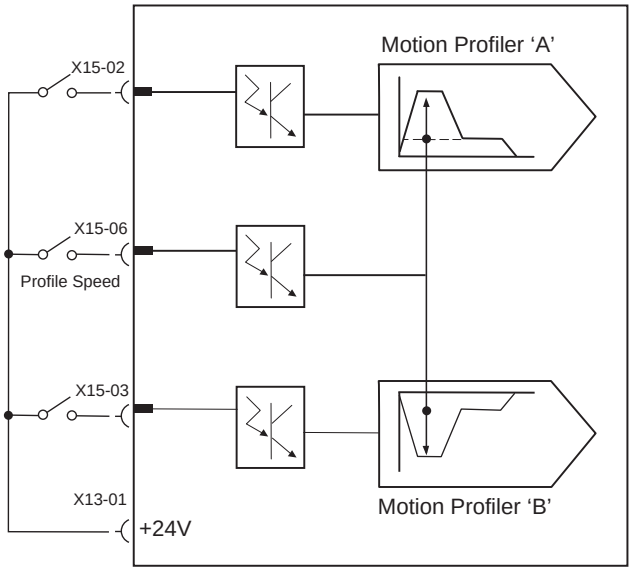

Speed and Direction Mode

Similar to Valve Mode, direction is set by inputs X15-02 and X15-03.

HAS speed is infinitely adjustable on the fly via an analog input connected to X12-05.

Keypad entry (Mode) required to configure input type. "1" = 0-10 V, "2" = 0-20 mA, "3" = 4-20 mA.

Acceleration (R1) and Deceleration (R2) values are also used.

Analog Speed Control

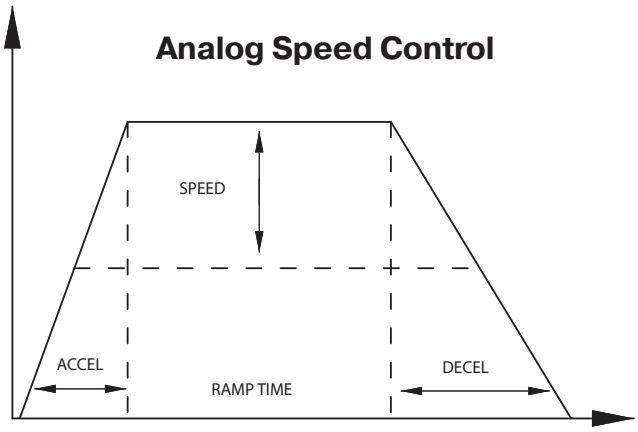

Proportional Mode

Similar to typical proportional valve style control, HAS actuator speed is infinitely adjustable on the fly via the analog input located on the drive.

Proportional mode, (keypad Entry Mode = "4") accepts a +/- 10 voltage signal at X12-05.

The sign dictates the direction and value controls the speed. To maintain minimum pump RPM a slight deadband will be present.

Acceleration (R1) and Deceleration (R2) values are also used. Direction can be inverted by keypad entry.

Proportional Mode

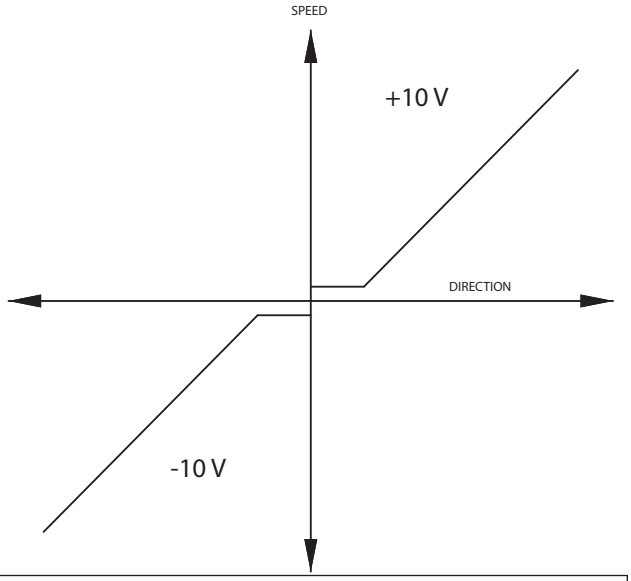

⚠ **PROP 65 WARNING** **WARNING:** This product can expose you to chemicals including Lead and Lead Compounds which are known to the State of California to cause cancer and birth defects or other reproductive harm. For more information go to www.P65Warnings.ca.gov

Parker's Network Capabilities by Technologies

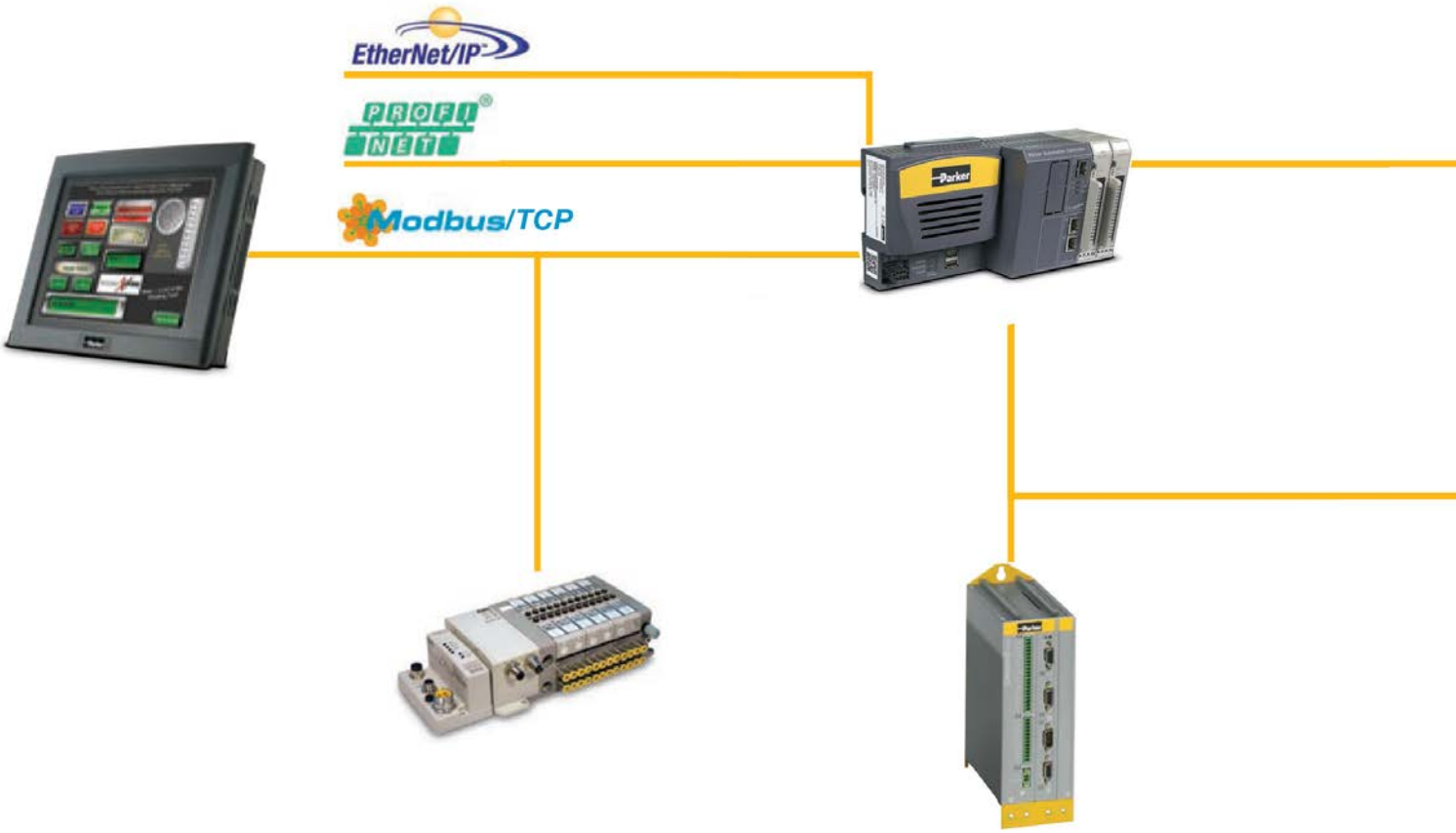

Pneumatics **Hydraulics**

Air Cylinders

Rod Actuators

Valves & Cylinders

Servo Pumps

⚠ **PROP 65 WARNING** **WARNING:** This product can expose you to chemicals including Lead and Lead Compounds which are known to the State of California to cause cancer and birth defects or other reproductive harm. For more information go to www.P65Warnings.ca.gov

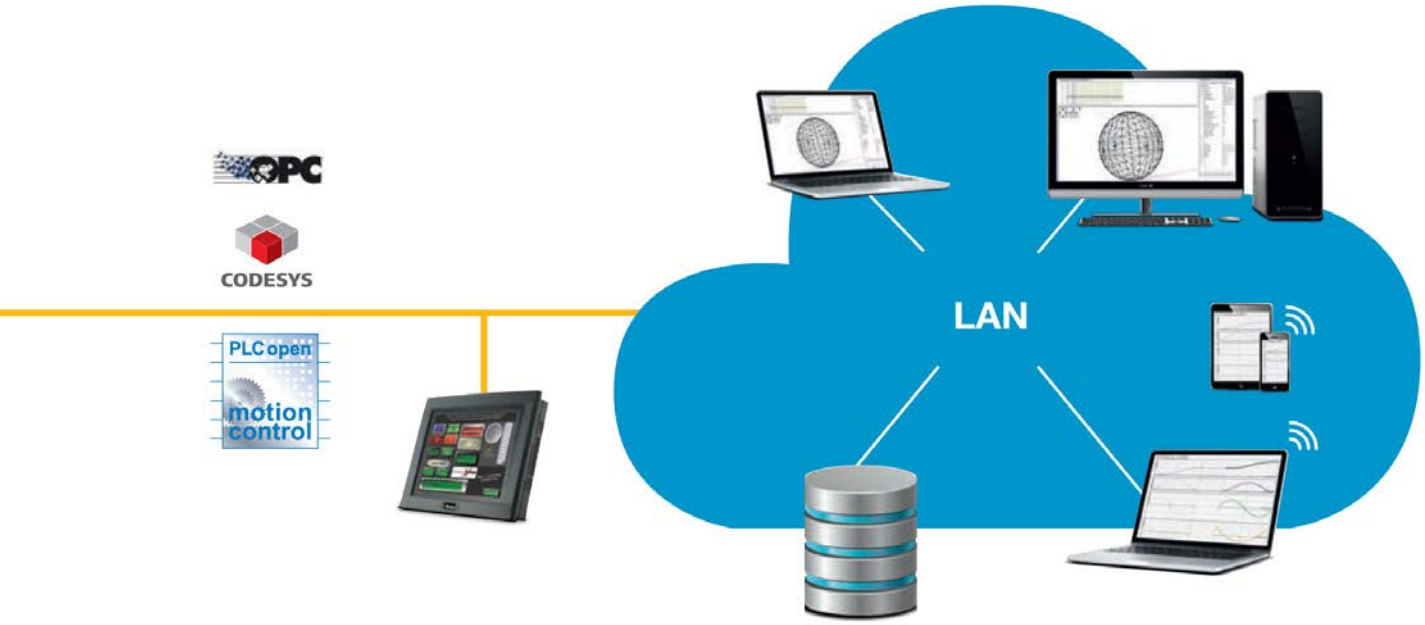

Servo Drives

Hybrids

AC Drives

Ball Screw Actuators

Roller Screw Actuators

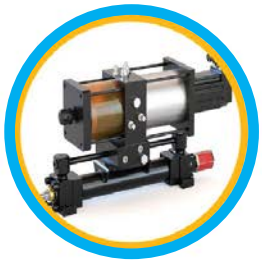

Hybrid Actuators

Torque Motors

AC Motors

⚠ **PROP 65 WARNING** **WARNING:** This product can expose you to chemicals including Lead and Lead Compounds which are known to the State of California to cause cancer and birth defects or other reproductive harm. For more information go to www.P65Warnings.ca.gov

Motion Options - DC Power

Rugged Brushless PMAC motors for DC Power Sources

Motor options for demanding mobile applications require a motor designed for mobile from the ground up. HAS D Series motors are brushless permanent, providing high stall torques and greater efficiency compared to other DC design type motors.

Post terminals for motor connection and Deutsch connector for feedback, provide seamless installations.

Matched with an inverter, J1939 communications allow easy integration into Parker's IQAN control system.

D Series Motor Features

- Brushless construction
- High torque small packaging
- Dual Sin/Cos feedback
- PT1000 temperature monitoring - protection
- AmpSeal feedback connector, motor post terminals

General Specifications

Maximum motor speed*	3000	RPM
Operating temperature	-40° to +158°	F
Storage temperature	-40° to +185°	F
Number of poles	12	
Environmental Rating	IP56	

*May require field weakening

IP56 Definition

"5" = Complete protection against contact with live or moving parts inside the enclosure. Protection against harmful deposits of dust. The ingress of dust is not totally prevented, but cannot enter in an amount sufficient to interfere with satisfactory operation of the machine.

"6" = Water from heavy seas or water projected from jets shall not enter the machine in any harmful quantity.

Specifications

Part No.		D09A	D09B	D09C	D12A	D12B	D12C
Voltage		24	36	48	24	36	48
Power	kW	1.48	1.48	1.48	1.85	1.85	1.85
	HP	1.98	1.98	1.98	2.48	2.48	2.48
Constant Torque	Nm	5.8	5.8	5.8	7.4	7.4	6.78
	Inch-Lbs	51.33	51.33	51.33	65.50	65.50	60.01
Peak Torque	Nm	15.30	15.30	15.30	20.7	20.7	20.10
	Inch-Lbs	135.42	135.42	135.42	183.21	183.21	177.90
Max Current	ARMS	175.00	117.00	93.00	175	155	142
Rated Speed	RPM	1700	1800	1850	1400	1800	2300
Torque Constant (Kt)	Nm/ ARMS	0.091	0.136	0.173	0.120	0.137	0.149
Motor Weight	lbs	23.6	23.6	23.6	29.5	29.5	29.5
Recommended Drive		09917012411-D09A	09917013611-D09B	09917014811-D09C	09917012411-D12A	09917013611-D12B	09917014811-D12C

⚠ PROP 65 WARNING **WARNING:** This product can expose you to chemicals including Lead and Lead Compounds which are known to the State of California to cause cancer and birth defects or other reproductive harm. For more information go to www.P65Warnings.ca.gov

Inverter for DC Motors (Series D)

Features

Dependable
Mobile hardened design suitable for demanding applications. Protected against ingress of dust and moisture with **IP65 ratings.**

Connections
AMPSEAL 35 pin connector for I/O, CAN and motor feedback.

Motor and battery posts, M6 fasteners.

Ease of Use
Preprogrammed for integration into Parker IQAN, ready for installation.

Speed and direction control available J1939 communications (IQAN) or
locally with simple discrete inputs.

Easy connect to IQAN®

How to Order Inverter

099170 XX XX – D09A

Base Drive Up to 300 Amps

Voltage
24 = 24V
36 = 36V
48 - 48V

Heat Sink
11 = Flat Sink

Motor Configuration
D09A = 1.98 HP, 24V
D09B = 1.98 HP, 36V
D09C = 1.98 HP, 48V
D12A = 2.48 HP, 24V
D12B = 2.48 HP, 36V
D12C = 2.48 HP, 48V

Included in Drive Kit

Inverter Connector Discrete Coms
35 Pin 776164-1 (TE)

Strain Reliefs: (2 required)
35 Pin: 776463-1 (TE)

Motor Feedback Connector 8 Pin AMP SEAL
776286-1 Shell
770854-1 Pins

⚠ **PROP 65 WARNING** **WARNING:** This product can expose you to chemicals including Lead and Lead Compounds which are known to the State of California to cause cancer and birth defects or other reproductive harm. For more information go to www.P65Warnings.ca.gov

PART NO. 09917****-****

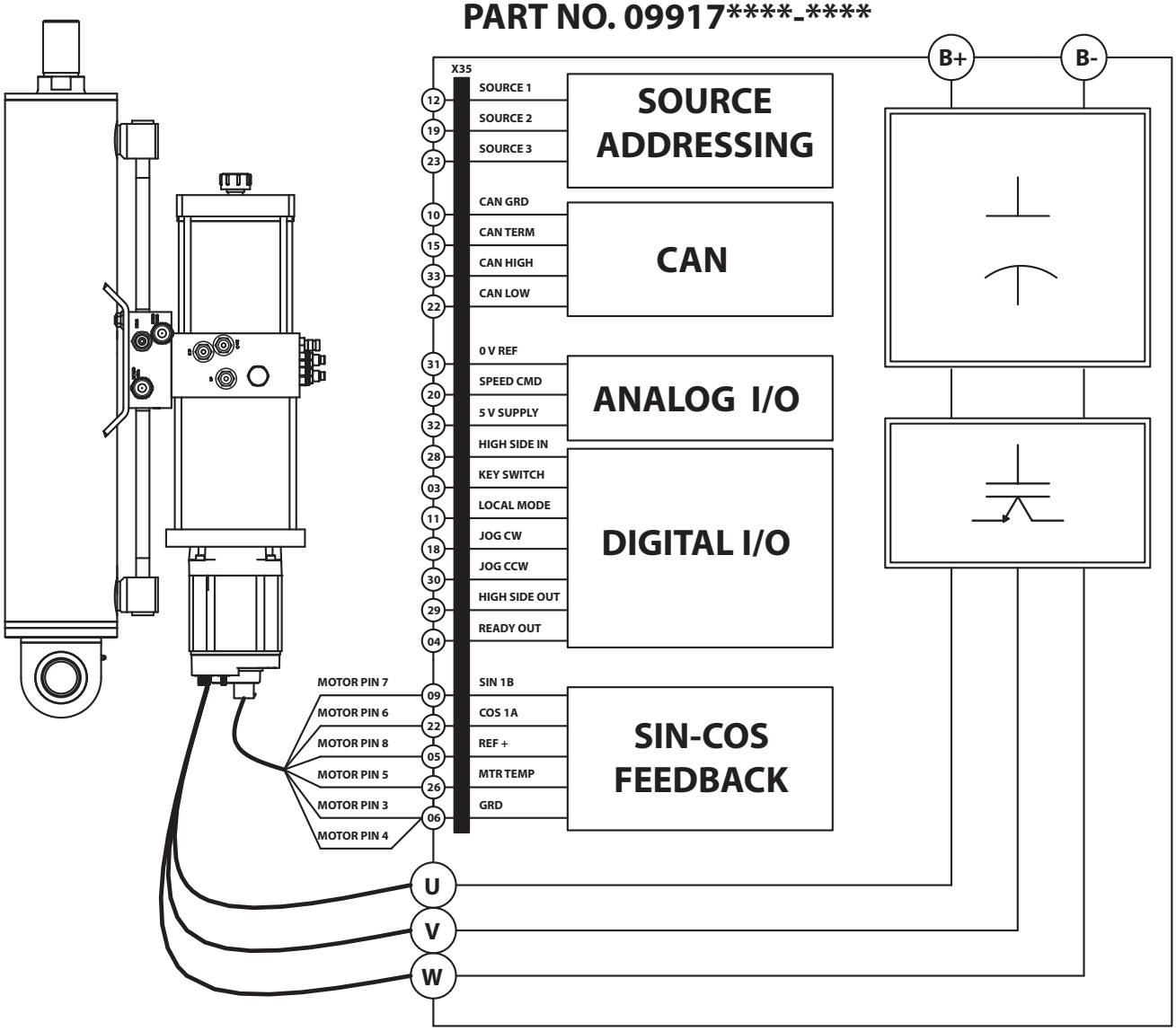

Source Addressing

Up to (8) HAS actuators can be connected to a singular J1939 CAN Bus network. Source address assignment is achieved by the 3-bit wiring configuration done in the cable harness.

This allows for multiple controllers to be installed on your machine without the need of stocking multiple part numbers.

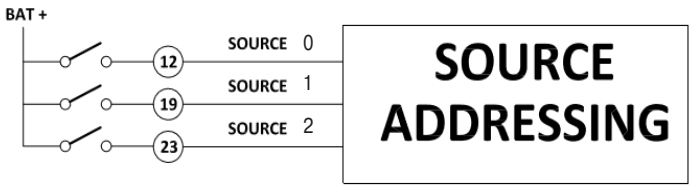

SA0 pin 12	SA1 pin 19	SA3 pin 23	Source Address
0	0	0	Ox5B [91] (Axis 0)
0	0	1	Ox5C [92] (Axis 1)
0	1	0	Ox5D [93] (Axis 2)
0	1	1	Ox5E [94] (Axis 3)
1	0	0	Ox5F [95] (Axis 4)
1	0	1	Ox60 [96] (Axis 5)
1	1	0	Ox60 [97] (Axis 6)
1	1	1	Ox60 [98] (Axis 7)

⚠ PROP 65 WARNING **WARNING:** This product can expose you to chemicals including Lead and Lead Compounds which are known to the State of California to cause cancer and birth defects or other reproductive harm. For more information go to www.P65Warnings.ca.gov

Motion Options - DC Power

Economical Brushed-Type Motor for DC Power Sources

Economical open frame motor options for HAS applications.

Simple 2 wire connections allow connection into simple PWM controllers for speed and direction control.

Voltages from 12 to 48 volts inputs, current up 300 amps, 100 amps continuous provides a lot of power for mobile HAS applications.

F Series Motor Features

- 1500 hour brush life
- Field replaceable brushes
- 12-48 VDC inputs
- 100 amps continuous rating
- 300 amp peak for 30 seconds

General Specifications

Maximum motor speed	4850	RPM
Operating temperature	-40° to +158°	F
Storage temperature	-40° to +185°	F
Rating	Open frame	

Specifications

Part No.		F17A	F17A	F17A
Voltage		24	36	48
Power	kW	2.10	3.25	4.30
	HP	2.82	4.36	5.77
Constant Torque	Nm	10.2		
	Inch-Lbs	90.0		
Peak Torque	Nm	25.5		
	Inch-Lbs	225.8		
Max Current	Amps	250.0		
Constant Current	Amps	100.00		
Rated Speed	RPM	2000	3000	4000
Torque Constant (Kt)	Nm/ARMS	0.102		
Speed Constant	RPM/Volt	93.45		
Motor Weight	lbs	24		
Recommended Drive		0991640024	0991640036	0991640048

PROP 65 WARNING **WARNING:** This product can expose you to chemicals including Lead and Lead Compounds which are known to the State of California to cause cancer and birth defects or other reproductive harm. For more information go to www.P65Warnings.ca.gov

B
Power Pack

PWM Controller for DC Motors (Series F)

Features

Dependable
Mobile hardened design suitable for demanding applications. Integral heat sink mounts on any suitable surface.

ABS+PC510 flame resistance thermal plastic coating.

Copper heat sink for superior thermal heat transfer.

Connections
Stainless 5/16" hardware included with controller.

Ease of Use
Simple speed and directional control with addition of reversing relay.

Performance
32 bit high performance processor for smooth speed operation of HAS actuators.

Free software to alter basic setup.

Controller Kit Part No.

0991640024

Base Drive

Battery Voltage
-24 = 24V
-36 = 36V
-48 = 48V

Kit includes:

Controller
Main Contactor
Reversing Relay
Mounting hardware
Resistor and diodes

⚠ PROP 65 WARNING **WARNING:** This product can expose you to chemicals including Lead and Lead Compounds which are known to the State of California to cause cancer and birth defects or other reproductive harm. For more information go to www.P65Warnings.ca.gov

Motor Mounts for Non-Standard Motors

Order Code	A09*	A10*	A11*	A14*	D09*/D12*	F17*
Shaft length (L-LB)	40.1	40.2	50.6	60.4	30	47.6
Shaft Dia (D)	16	19	24	28	14	22.23
Key (F x GE)	3 x 5	3.5 x 6	4 x 8	4.1 x 8	5	4.78
Pilot Dia (N)	80	95	110	130	70	114.3
Bolt Circle	100	115	130	165	85	106.4

For use with non-standard motors, above table list dimensions for standard motor adapters, if standard motor adapter meet requirements for desired motor, appropriate adapter can be selected, and motor ordered as “X” Fitted Only. HAS unit will be shipped with mating coupling for customer to install motor.

For motors dimension not listed above, use adapter code XOOX and Motor code X and consult factory with motor manufacturer, part number and provide the mounting information in table A to order with correct motor mount and coupling.

Table A

Required Details when requesting custom motors
Shaft Length (L-LB)
Shaft Dia (D)
Key (F x GE)
Pilot Dia (N)
Bolt Circle (BC)

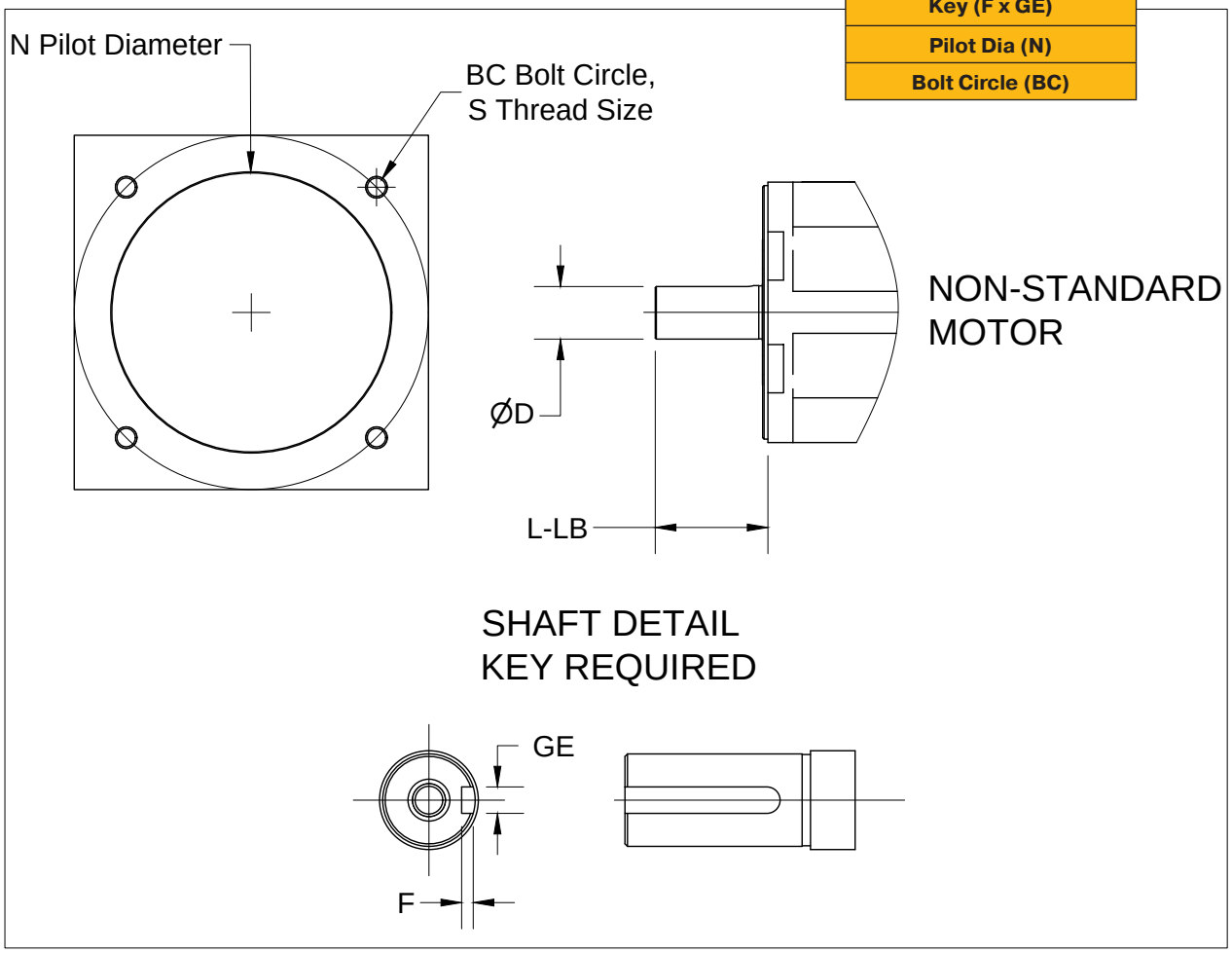

B Power Pack

⚠ PROP 65 WARNING **WARNING:** This product can expose you to chemicals including Lead and Lead Compounds which are known to the State of California to cause cancer and birth defects or other reproductive harm. For more information go to www.P65Warnings.ca.gov

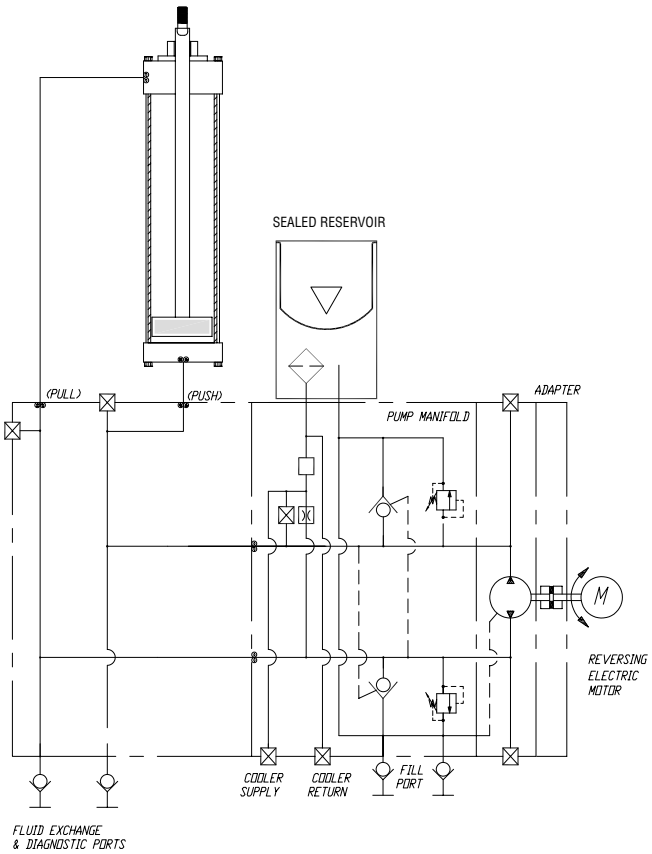

No Load Holding

Order Code NN

This configuration is most efficient, however actuator must be friction held to prevent runaway condition.

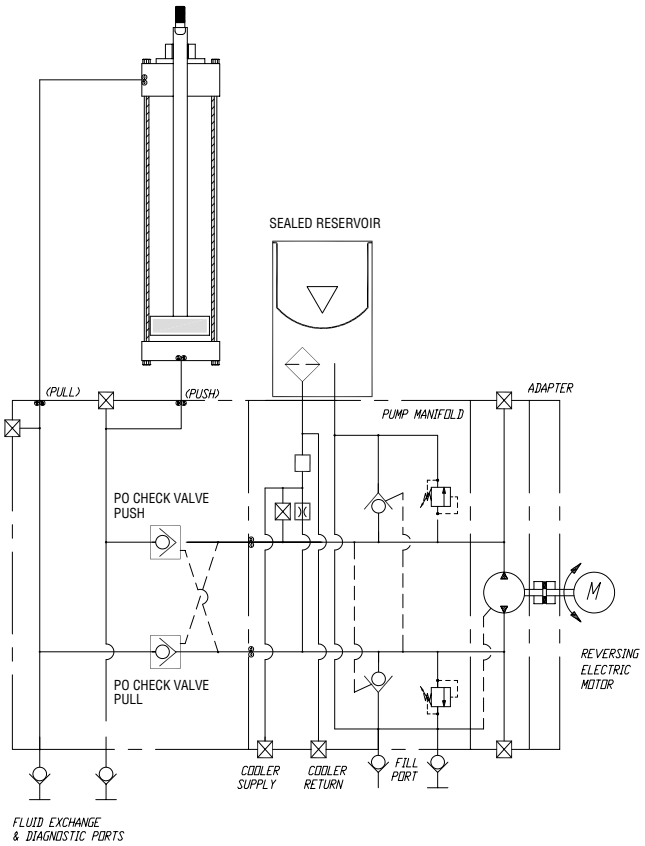

Dual Pilot Operated Checks

Order Code PP

This configuration is used where the actuator must be hydraulically locked in place.

- These 3 port Pilot to Open check valves have heat treated poppet and seats for long life and extremely low leakage.
- Pilot ratio of 3:1

Order Code RR

This configuration is used where the actuator must be hydraulically locked in place.

- These 3 port Pilot to Open check valves have heat treated poppet and seats for long life and extremely low leakage.
- Pilot ratio of 3:1
- Includes Manual Load Release

⚠ **PROP 65 WARNING** **WARNING:** This product can expose you to chemicals including Lead and Lead Compounds which are known to the State of California to cause cancer and birth defects or other reproductive harm. For more information go to www.P65Warnings.ca.gov

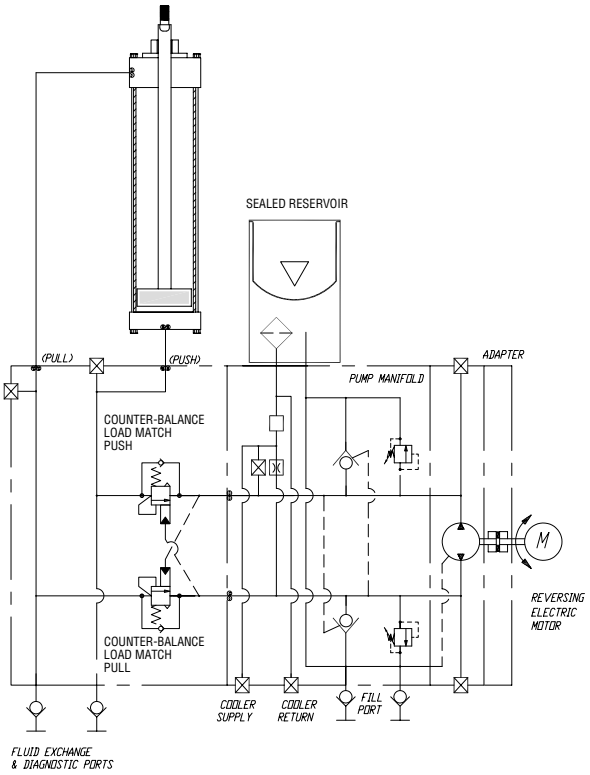

Dual Counterbalance Valve

Order Code CC

For use with Over running loads in both directions.

- 3:1 pilot ratio with setting of 3000 standard.
- 4 PSI cracking check pressure standard for free flow check.
- Valve setting should be greater than 1.3 times the load induced pressure.
- Counterbalance valves provide thermal expansion protection and are suitable for outdoor applications.

Dual Load Match CB Valve

Order Code LL

Load-match counterbalance valves are self setting counterbalance valves

- Adjust dynamically in response to the load pressure up to the valve thermal relief setting. These valves provide reduced energy consumption over fixed setting counterbalance valves.
- Max recommend holding pressure is 3075 PSI.
- Cracking pressure is 3850-4250 PSI, thermal protection, suitable for outdoor HAS applications.

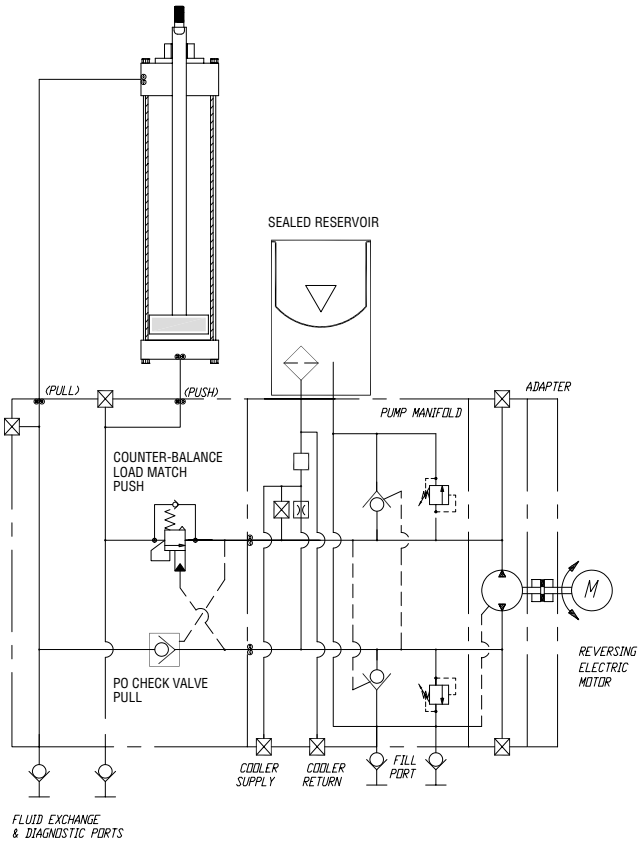

Mix & Match

With individual order code for valves for both Push and Pull circuits, you can customize your load holding circuit to meet your system demands and energy losses.

Other

Consult factory for additional circuit options

- Hydraulic Regeneration
- Spring Return
- Servo Positioning
- Manual Bypass - Hand Pump

B Power Pack

⚠ PROP 65 WARNING **WARNING:** This product can expose you to chemicals including Lead and Lead Compounds which are known to the State of California to cause cancer and birth defects or other reproductive harm. For more information go to www.P65Warnings.ca.gov

B
Power Pack

Reservoir Construction

Hybrid Actuation System Cylinders are designed to be worry-free plug and play actuators. Pump shrouds and manifolds are constructed from anodized aluminum for light weight. For all steel construction, please consult factory.

The reservoir is designed to minimize fluid requirement but maintain the integrity of the hydraulic system. The Patented reservoir bag assembly creates a barrier from the airborne contaminates and moisture that can cripple most hydraulic systems. This bag acts as a bladder, allowing the system to breathe when drawing oil from the reservoir and collapse when returning.

Reservoirs are sized based upon rod diameters and stroke length. Volumes are reduced to typically less than a gallon of fluid.

Choose from composite or aluminum reservoir shells. **Bonded on every bag is a magnet - when used with a global switch, a low oil level shutdown can be activated in the event of a rod seal or other external leaks to help prevent major system failures.** Switch option is only available with composite or aluminum reservoir shells.

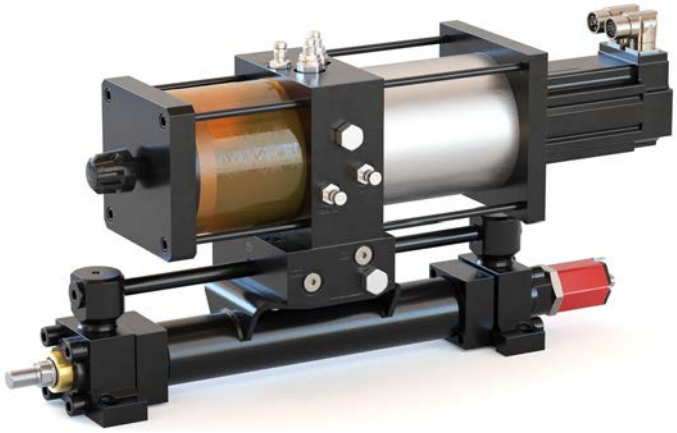

Shown with semi-clear composite shell

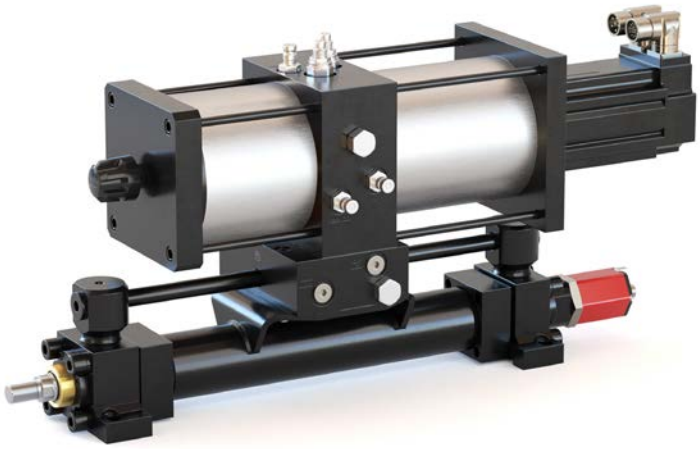

Shown with aluminum shell

Tie Rod Bracket Assembly Part Number and Dimensions

***Global switches and bracket assemblies must be ordered separately.**

Reed Switch – Wiring Connection

Flying Lead or 8 mm Connector

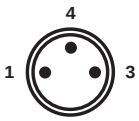

Pin	Wire	Function
1	Brown	Operating Voltage (+V)
4	Black	Not Used
3	Blue	Output Signal (-V or Ground)

Global Drop-In Reed Switches

Wiring	Reed Switch
3m Flying Leads	P8S-GRFAX
10m Flying Leads	P8S-GRFDX
0.3m Lead with 8mm Connector	P8S-GRCHX

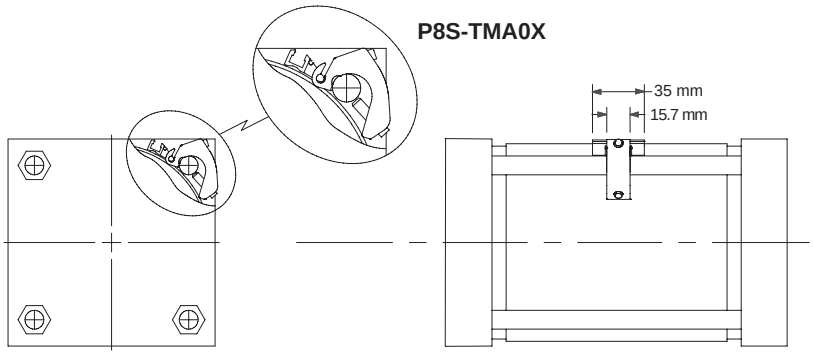

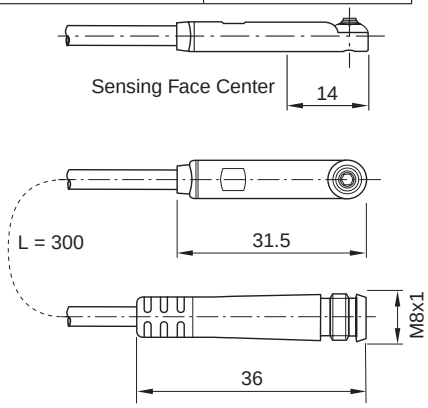

⚠ PROP 65 WARNING **WARNING:** This product can expose you to chemicals including Lead and Lead Compounds which are known to the State of California to cause cancer and birth defects or other reproductive harm. For more information go to www.P65Warnings.ca.gov

Parker DuraClean™

Starts Clean. Stays Clean.

Hybrid Actuation System Cylinders are vacuum filled with Parker DuraClean™ for maintenance-free operation. The sealed reservoir ensures airborne contaminates do not enter the system for operation under load in excess of 10,000 hours.

DuraClean™ is an ultra premium hydraulic oil provided exclusively by Parker. The fluid has a unique additive chemistry designed to maximize oil life while providing optimum anti-wear protection for the components of today's advanced hydraulic systems.

Performance Features

- ISO 46, all season, multi-grade hydraulic fluid
- Replaces ISO 32, 46 and 68 monogrades
- API Group II base oil extends oil life
- High viscosity index for wide operating temperature ranges
- Outstanding oxidation life to maximize component life
- Prevents varnish formation
- HAS actuators Flushed to ISO 16/14/11 cleanliness standard
- Special formulation that allows for rapid air release and water separation
- Excellent filterability to minimize filter blockage
- Outstanding acrylate anti-foam agent contains no silicones which can lead to inaccurate particle counts
- Excellent shear stability for stable viscosity over time
- Superior thermal stability for uncompromised performance at high temperatures
- Parker gold dye for easy identification
- Formulated to help extend the life of seals

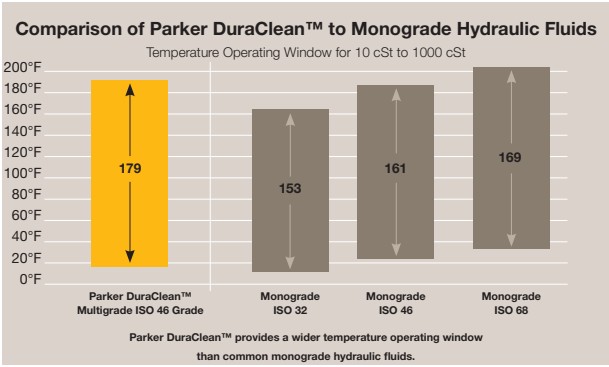

Typical Properties	Test Method	
ISO Grade		Multigrade 46
Appearance		Parker Gold
Specific Gravity @ 15°C	D4052	.867
Flash Point (COC) °F(°C)	D92	413 (212)
Pour Point °F(°C)	D97	-43 (-42)
Viscosity cSt @ 40°C cSt @ 100°C	D445	44.30 7.65
Viscosity Index	D2270	141
Acid Number, mg KOH/g TAN	D664	0.6
Oxidation, hrs.	D943	5500 - 6000 Typical
Rust Test	D665A/D665B	Pass
Denison Filterability Dry, time in seconds Wet, time in seconds		172 (600 maximum limit) 202 (344 maximum limit)
Thermal Stability, sludge in mg		2.5 (25 maximum limit)
Shear Stability % viscosity loss after 20 test hours	KRL	4.3 (15 maximum limit)

Other fluids available upon request

Without Parker DuraClean – ™ Varnish

With Parker DuraClean – ™ No Varnish

⚠ **PROP 65 WARNING** **WARNING:** This product can expose you to chemicals including Lead and Lead Compounds which are known to the State of California to cause cancer and birth defects or other reproductive harm. For more information go to www.P65Warnings.ca.gov

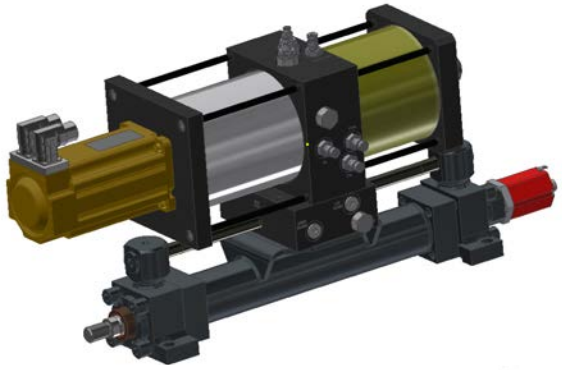

Power Pack Orientations

Centered, Reservoir Cap End

Order Code "A"

Power Pack can be in any traditional cylinder port option, with default port position 1, except on mounting styles: JJ, HH, D, DB, DD, DE, limited to position 1 and 3. C limited to position 1 only

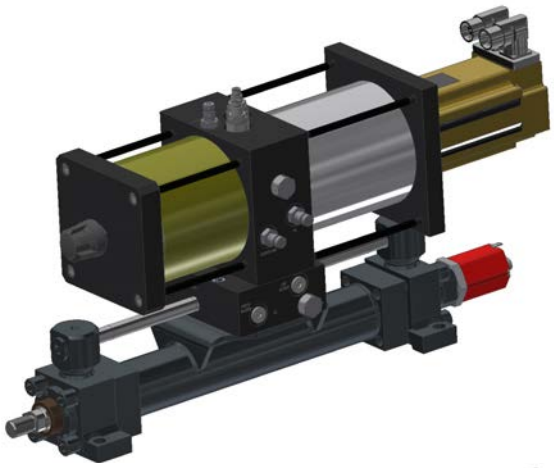

Centered, Reservoir Head End

Order Code "B"

Select this option for horizontal and vertical rod up mounting arrangements.

Power Pack can be in any traditional cylinder port option, with default port position 1, except on mounting styles: JJ, HH, D, DB, DD, DE, limited to position 1 and 3. C limited to position 1 only

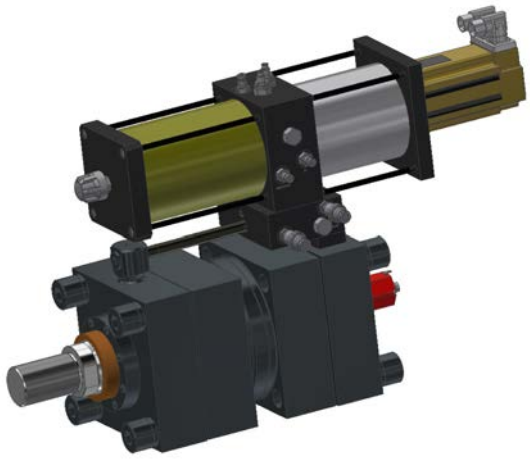

Cap Manifold Mount Reservoir Head End

Order Code "C"

Select this option for horizontal and vertical rod up mounting arrangements with short strokes.

Power Pack can be in any traditional cylinder port option, with default port position 1, except on mounting styles: JJ, HH, D, DB, DD, DE, limited to position 1 and 3. C limited to position 1 only

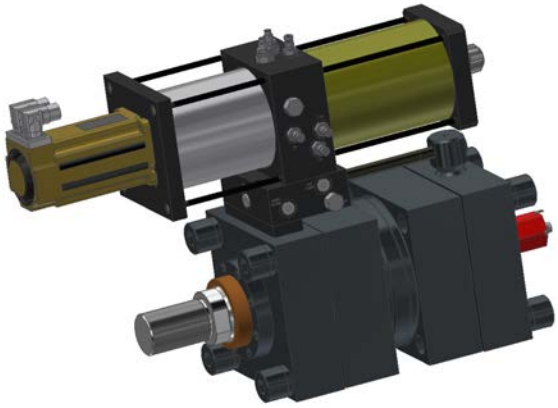

Head Manifold Mount Reservoir Cap End

Order Code "H"

Select this option for horizontal and vertical rod down mounting arrangements with short strokes.

Power Pack can be in any traditional cylinder port option, with default port position 1, except on mounting styles: JJ, HH, D, DB, DD, DE, limited to position 1 and 3. C limited to position 1 only

⚠ **PROP 65 WARNING** **WARNING:** This product can expose you to chemicals including Lead and Lead Compounds which are known to the State of California to cause cancer and birth defects or other reproductive harm. For more information go to www.P65Warnings.ca.gov

Air Cooled Heat Exchanger Dimensions

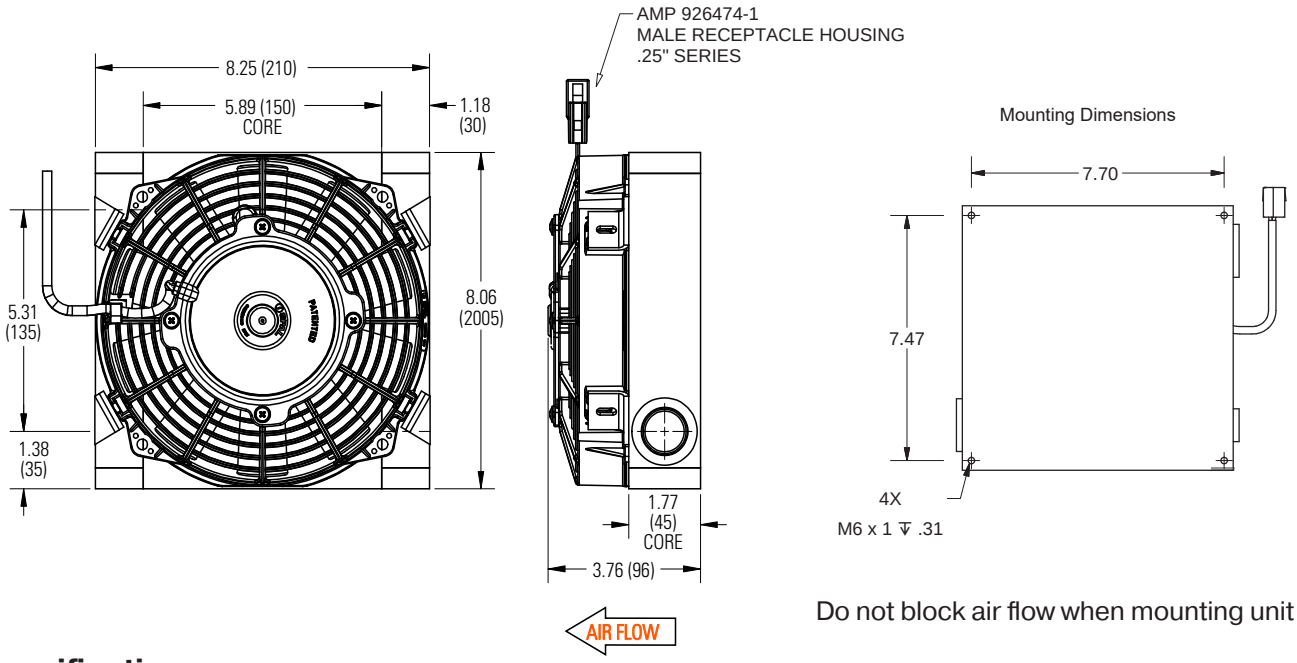

Do not block air flow when mounting unit

Specifications

Max Pressure:	250 PSI
Construction:	Brazed Aluminum
AMP Draw 12V:	12.5 Amps
AMP Draw 24V:	6.3 Amps
CFM:	300
Weight (less oil):	9 lbs

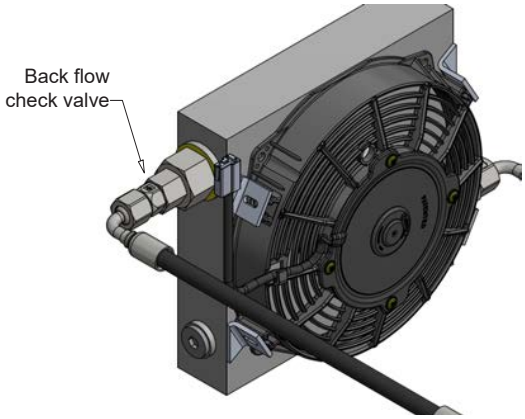

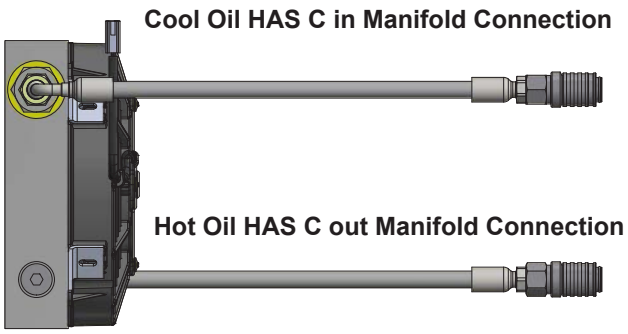

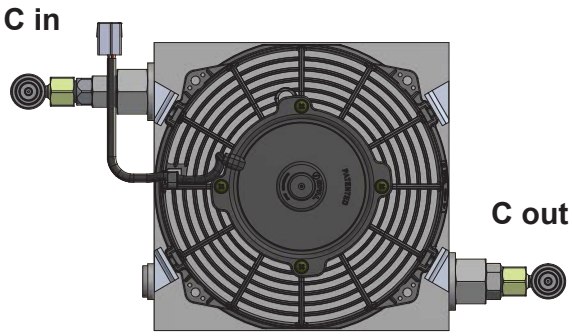

Never operate with only (1) hose connected as damage to Heat exchanger will happen.

⚠ PROP 65 WARNING **WARNING:** This product can expose you to chemicals including Lead and Lead Compounds which are known to the State of California to cause cancer and birth defects or other reproductive harm. For more information go to www.P65Warnings.ca.gov

Water Cooled Heat Exchanger Dimensions

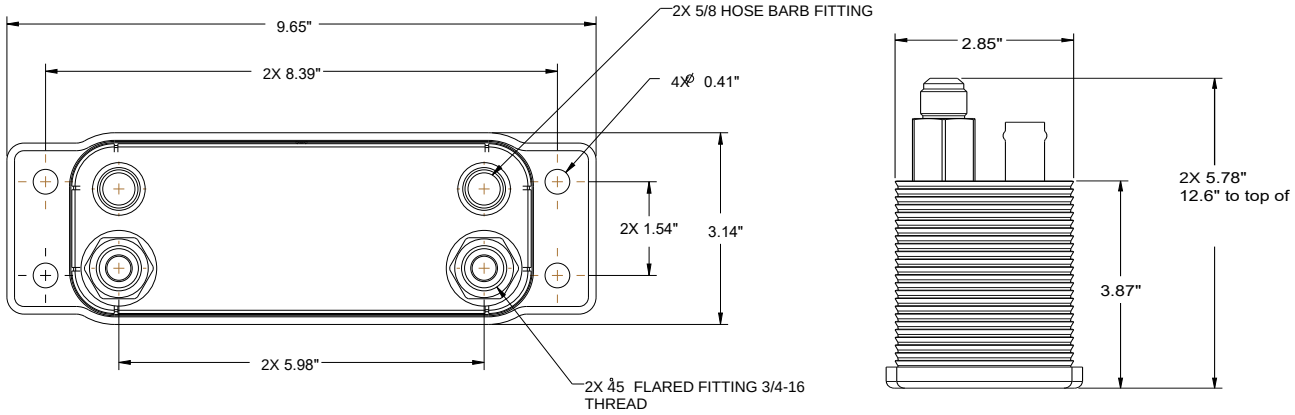

Specifications

Max Pressure:	100 PSI
Construction:	Brazed Aluminum

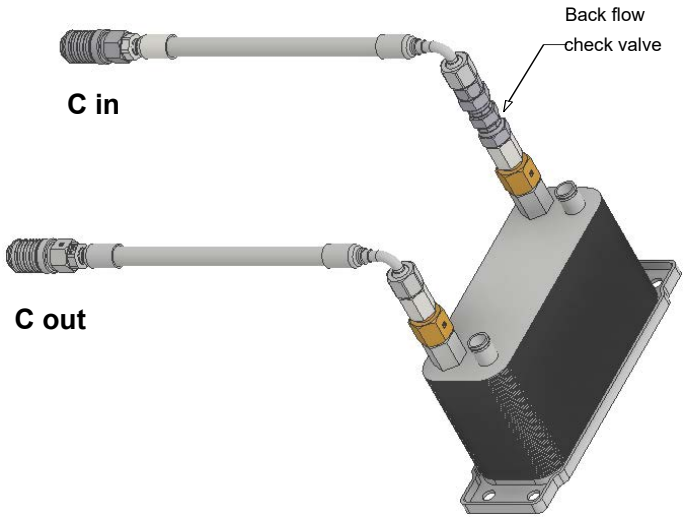

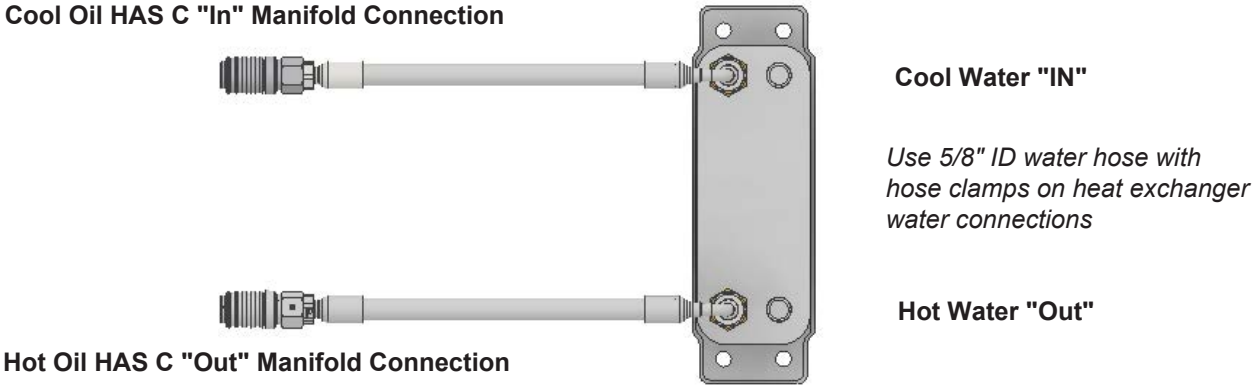

Never operate with only (1) hose connected as damage to Heat exchanger will happen.

⚠ PROP 65 WARNING **WARNING:** This product can expose you to chemicals including Lead and Lead Compounds which are known to the State of California to cause cancer and birth defects or other reproductive harm. For more information go to www.P65Warnings.ca.gov

The Below Table Displays Pump RPM/Flow Loss When Using Filter Bleed Orifices

Minimum RPM Table			Pump RPM									
			G03	G04	G05	G06	G07	G08	G09	G10	G11	G12
GPM	HP	PSI	Default Orifice Size 0.020"									
0.175	0.05	500	155	116	93	77	66	58	52	46	42	39
0.25	0.15	1000	221	166	132	110	95	83	74	66	60	55
0.3	0.26	1500	265	199	159	132	114	103	88	79	72	66
0.35	0.41	2000	309	232	185	155	132	116	103	93	84	77
0.39	0.57	2500	344	258	207	172	148	129	115	103	94	86
0.43	0.75	3000	380	285	228	190	163	142	127	114	104	95
GPM	HP	PSI	Orifice Size 0.025"									
0.275	0.08	500	243	182	146	121	104	91	81	73	66	61
0.39	0.23	1000	344	258	207	172	148	129	115	103	94	86
0.46	0.40	1500	406	305	244	203	174	152	135	122	111	102
0.55	0.64	2000	486	364	291	243	208	182	162	146	132	121
0.62	0.90	2500	548	411	329	274	235	205	183	164	149	137
0.67	1.17	3000	592	444	355	296	254	222	197	178	161	148
GPM	HP	PSI	Orifice Size 0.035"									
0.53	0.15	500	468	351	281	234	201	176	156	140	128	117
0.78	0.46	1000	689	517	413	344	295	258	230	207	188	172
0.93	0.81	1500	821	616	493	411	352	308	274	246	224	205
1.1	1.28	2000	972	729	583	486	416	364	324	291	265	243
1.2	1.75	2500	1060	795	636	530	454	397	353	318	289	265
1.35	2.36	3000	1192	894	715	596	511	447	397	358	325	298
GPM	HP	PSI	Orifice Size 0.049"									
1.05	0.31	500	927	696	556	464	397	348	309	278	253	232
1.5	0.88	1000	1325	994	795	662	568	497	442	397	361	331
1.82	1.59	1500	1608	1206	965	804	689	603	536	482	438	402
2.1	2.45	2000	1855	1391	1113	927	795	696	618	556	506	464
2.35	3.43	2500	2076	1557	1245	1038	890	778	692	623	566	519
2.6	4.55	3000	2296	1722	1378	1148	984	861	765	689	626	574

Note: Theoretical values, actual may vary. Other orifice sizes available, please consult factory.

Water Cooled Units

"W" Heat Exchanger Option with Bleed Orifice on Pull

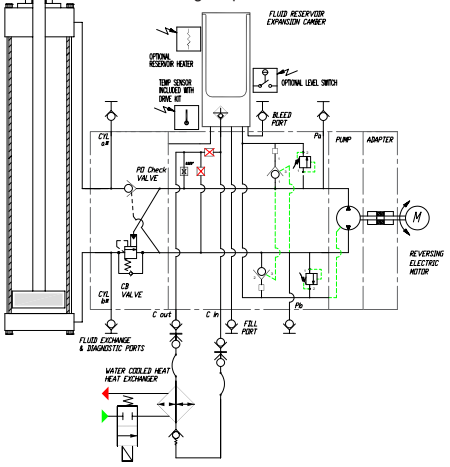

Air Cooled Units

"A" Heat Exchanger Option with Bleed Orifice on Push

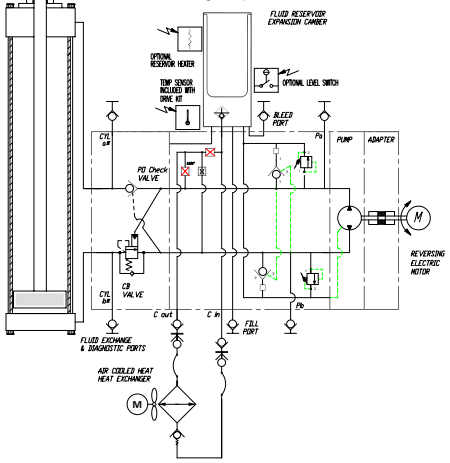

⚠ PROP 65 WARNING **WARNING:** This product can expose you to chemicals including Lead and Lead Compounds which are known to the State of California to cause cancer and birth defects or other reproductive harm. For more information go to www.P65Warnings.ca.gov

Option Code D

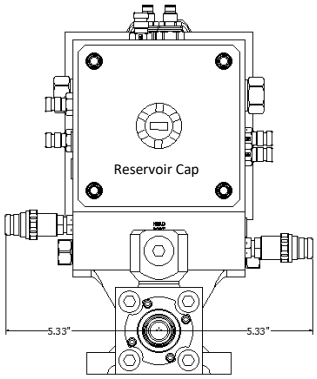

Diagnostic Couplers Package
PD361 nipples on Pump Outlets

FEM-252 nipples on Cylinder ports, located on each side

Option Code E

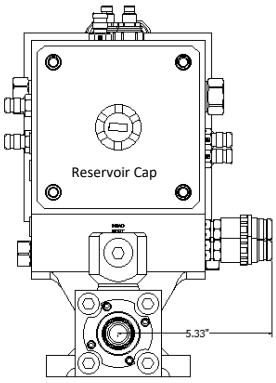

Diagnostic Couplers Package
PD361 nipples on Pump Outlets

FEM-252 nipples on Cylinder ports, located on right side

Option Code F

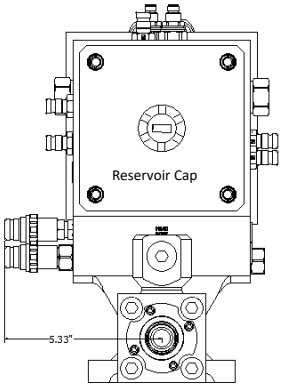

Diagnostic Couplers Package
PD361 nipples on Pump Outlets

FEM-252 nipples on Cylinder ports, located on left side

Option Code P

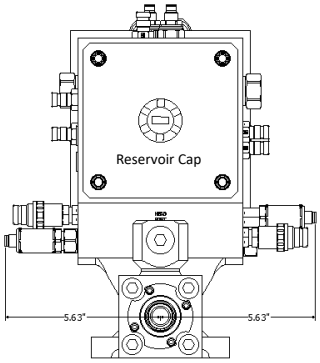

Sensor Package Industrial
PD361 nipples on Pump Outlets

FEM-252 nipples on Cylinder ports, located on each side

SCP01 Sensors located on each side

Option Code R

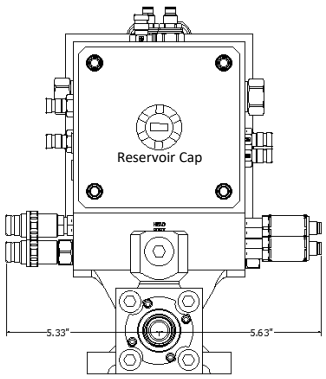

Sensor Package Industrial
PD361 nipples on Pump Outlets

FEM-252 nipples on Cylinder ports, located on left side

SCP01 Sensors located on right side

Option Code S

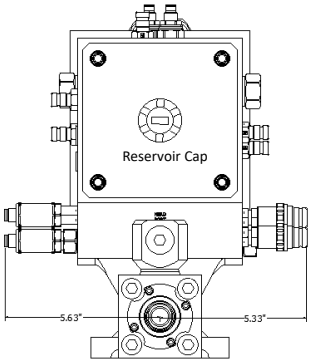

Sensor Package Industrial
PD361 nipples on Pump Outlets

FEM-252 nipples on Cylinder ports, located on right side

SCP01 Sensors located on left side

Option Code T

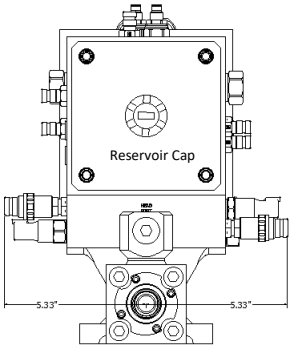

Sensor Package Mobile
PD361 nipples on Pump Outlets

FEM-252 nipples on Cylinder ports, located on each side

SCP05 Sensors located on each side

Option Code U

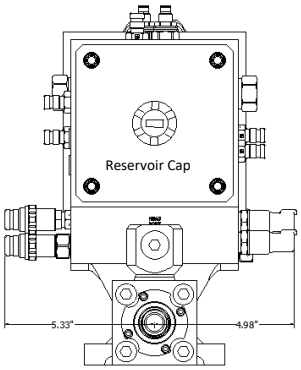

Sensor Package Mobile
PD361 nipples on Pump Outlets

FEM-252 nipples on Cylinder ports, located on left side

SCP05 Sensors located on right side

Option Code W

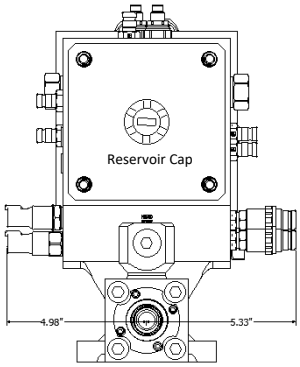

Sensor Package Mobile
PD361 nipples on Pump Outlets

FEM252 nipples on Cylinder ports, located on right side

SCP05 Sensors located on left side

⚠ PROP 65 WARNING **WARNING:** This product can expose you to chemicals including Lead and Lead Compounds which are known to the State of California to cause cancer and birth defects or other reproductive harm. For more information go to www.P65Warnings.ca.gov

Industrial Sensor

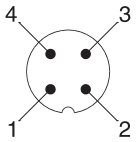

Pin	Description	Cable Wire Color
1	Vs (Supply Voltage)	Brown
2	Output	White
3	Vc (Supply Com-mon)	Blue
4	n/c	

Part No.	0992300000
Model No.	SCP01-5000P-47-07
Pressure Range (PSI)	0 to 5000
Electrical Connection	M12 x 1 (4-pin)
Overload Pressure	10,000 PSI
Burst Pressure	12,500 PSI
Accuracy	+/- 0.5% FS
Protection Class	IP67
Response Time	<1ms
Supply Voltages	12-30V DC
Temperature Ranges	
Environmental	-40° F to 185° F
Storage	-40° F to 257° F
Vibration	Meets IEC 60068-2-29
Shock	Meets IEC 60068 2-32
EMI Compatibility	DIN EN 61000-6-3
	DIN EN 61000-6-2
Output at Full Scale	10 V (5K PSI)
Zero Output	0 V
Mating Cable 5 Meter	0975650000

Mobile Sensor

Pin	Description
1	Output (10-90%)
2	Vs (Supply Voltage)
3	Vc (Supply Common)
4	n/c

Part No.	0992310000
Model No.	SCP05-250-R6-0D
Pressure Range (PSI)	0 to 3625
Electrical Connection	Deutsch DT04-4P
Overload Pressure	7250 PSI
Burst Pressure	14,500 PSI
Accuracy (-13F° C to 176° F	+/- 0.5% FS
Protection Class	IP67
Response Time	<1ms
Supply Voltages	5.0+/-10%Vdc
Temperature Ranges	
Environmental	-40° F to 212° F
Storage	-40° F to 257° F
Vibration	Meets IEC 60068-2-6
Shock	Meets IEC 60068 2-27
EMI Compatibility	DIN EN 61000-6-3
	DIN EN 61000-6-2
Output at Full Scale	4.5V
Zero Output	0.5V
Mating Connector	DT06-4S (Deutsch)

⚠ **PROP 65 WARNING** **WARNING:** This product can expose you to chemicals including Lead and Lead Compounds which are known to the State of California to cause cancer and birth defects or other reproductive harm. For more information go to www.P65Warnings.ca.gov

Cylinder Construction

Series HS2 / HS3 - HAS Non-Tie Rod Style with Bolted Gland

Series HS2 and HS3 are based off the 2HB/3HB platforms. Please see Catalog HY08-1314 for specifics. Series HS2/HS3 Non-tie rod style cylinder with bolt-on gland, robust Tri-Lip rod sealing system. Head and cap are bolted to threaded body flanges.

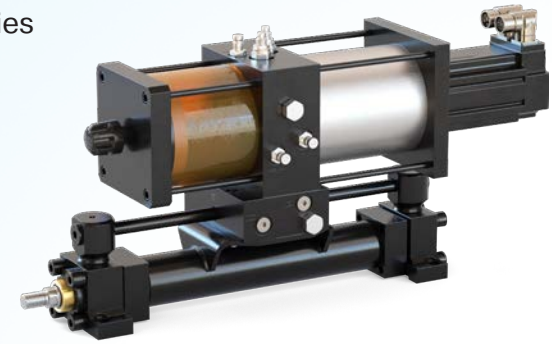

Advantages

- ✓ Improved fatigue life compared to welded flange construction
- ✓ Easier to service than tie rod styles
- ✓ Clean appearance improves machine aesthetics

Series HSR-HAS Welded Roundline Style Cylinder

Series HSR is based off the RDH platform Please see Catalog HY08-1320 for specifics. Series HSR welded roundline cylinder with threaded gland, robust Tri-Lip rod sealing system.

Advantages

- ✓ Rod ends and mounts common for mobile applications
- ✓ Clean appearance improves machine aesthetics

D Cylinder

Series HS2X / HS3X - HAS Non-Tie Rod Style with Bolted Gland

Series HS2X and HS3X are based off the 2HBX/3HBX platforms. Please see Catalog HY08-1175 for specifics Series HS2X/HS3X Non-tie rod style cylinder with integral position feedback device.

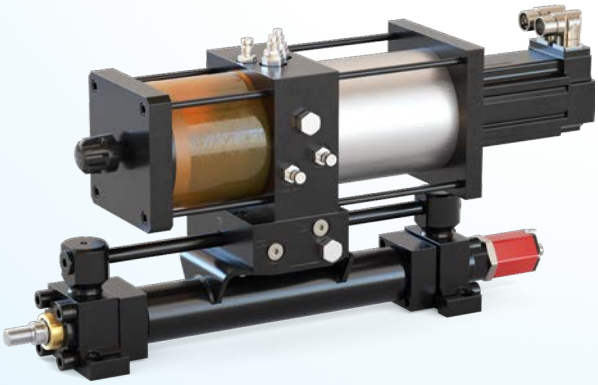

Advantages

- ✓ Improved position control with real-time absolute position feedback
- ✓ Wide offering of mobile and industrial outputs

⚠ **PROP 65 WARNING** **WARNING:** This product can expose you to chemicals including Lead and Lead Compounds which are known to the State of California to cause cancer and birth defects or other reproductive harm. For more information go to www.P65Warnings.ca.gov

Application Checklist

The following checklist should used to select the best possible cylinder for a given application. Additional information can be referenced in the following pages to help assist in this process. In the event that you have additional questions or concerns, or if more information is required, please contact your local Parker distributor or our customer service representatives for assistance.

1. **Establish the system requirements** ..... Series HS2, HS3, HSR
   - How heavy is the load to be moved?
   - What is the nominal operating pressure of the system?
   - How far does the load have to move?
   - What is the speed at which the load will move?
   - What is the temperature to which the cylinder will be exposed?

2. **Mounting Style** ..... Page 38
   - Determine the best mounting style for the application.
   - If your application requires a mounting style that is not exactly matched by one of our catalog offerings, we can supply the mounting you need. If the required mounting resembles one of our standards, specify that style, enter 'S' in the Special Modification field and provide a dimension drawing of your mount. Special mounting styles that do not resemble a standard style will be designated as style TX by the factory.

3. **Cylinder Bore** ..... Catalog HY08-1314, page 164-165
   - Review the theoretical push and pull force at desired speed for a given bore size to determine.

4. **Piston Rod** ..... Catalog HY08-1314, page 175-178
   - Determine what rod size will be required to avoid buckling.
   - Determine if a single or double rod cylinder is required.
   - Determine the rod end style and rod end thread.
   - Will stop tubing be required?

5. **Piston Seals** ..... Catalog HY08-1314, page VI-VII
   - Determine the best seal type for your application. All selections are high load style that include dual non-metallic wear bands straddling the piston seal.

6. **Cushioning** ..... Catalog HY08-1314, page 179-184
   - Determine if cushions are required to safely stop the load.
   - Determine whether optional solid cap cushion construction should be selected over standard floating cushion bushing style.

7. **Fluid** ..... Page 29
   - Parker DuraClean™ suitable for most applications.
   - Determine proper orientation of HAS power pack.
   - Determine HAS port location.

8. **HAS Location** ..... Page 30
   - Determine proper orientation of HAS power pack.
   - Determine HAS port location.

9. **Feedback** ..... Catalog HY08-1175
   - Will position feedback be required?
   - End of Stroke
   - Continuous measurement

10. **Piston rod and mounting accessories** ..... Catalog HY08-1300-1
    - Determine how you will attach the cylinder to the load.

11. **Custom modifications** ..... Catalog HY08-1314, page 149-162

⚠ **PROP 65 WARNING** **WARNING:** This product can expose you to chemicals including Lead and Lead Compounds which are known to the State of California to cause cancer and birth defects or other reproductive harm. For more information go to www.P65Warnings.ca.gov

Mounting Styles & Tips for Applying Them

Flange Mountings – J, JB, H, HB and HH

Application:
- Straight line force transfer
- Compression loads (push) – use H, HB or HH
- Tension loads (pull) – use J, JB or JJ

Advantages:
- Rigid base mounting due to large flange area
- Force is transferred along the centerline of the cylinder

Series HS2 / HS3

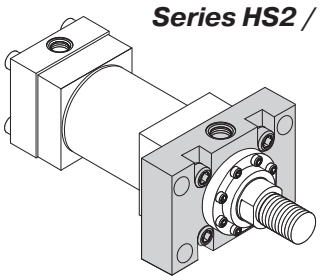

Side Tap Mounting – F / Side Lug Mounting – C

Application:
- Straight line force transfer
- Can be used in compression or tension loads
- Thrust key and secure mounting area are vital

Advantages:
- Ease of mounting

Recommendation:
- Styles F & C should have a minimum stroke at least equal to the bore diameter

Series HS2 / HS3

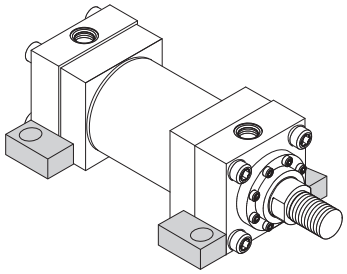

Pivot Mountings – BB, SB and SE

Application:
- Curved or arc line force transfer
- Can be used in compression or tension loads
- Movement in a simple arc – use BB mountings
- Movement in a compound arc – use SB or SE mountings

Advantages:
- Ease of mounting
- Design flexibility
- Self aligning (SB or SE)

Series HSR

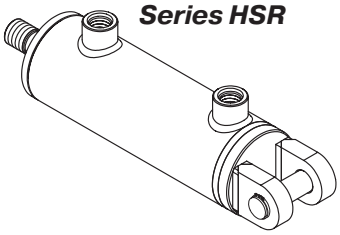

Trunnion Mountings – D, DB, DD and DE

Application:
- Curved or arc line force transfer
- Can be used in compression or tension loads
- Compression loads – use DB or DD, DE mountings
- Tension loads – use D, DD or DE mountings

Advantages:
- Ease of mounting
- Design flexibility
- Self aligning

Series HSR

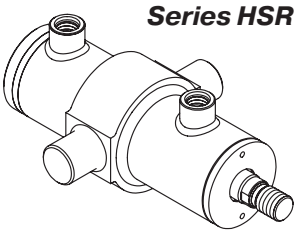

D
Cylinder

⚠ **PROP 65 WARNING** **WARNING:** This product can expose you to chemicals including Lead and Lead Compounds which are known to the State of California to cause cancer and birth defects or other reproductive harm. For more information go to www.P65Warnings.ca.gov

Parker Series HS2 (2HB) 2.00"-6.00" and (HS3) 3HB 7.00" & 8.00" Bore Heavy Duty Hydraulic Cylinders

Series HS2 2.00"-6.00" and HS3 7.00" & 8.00" bore cylinders are envelope pressure rated at 3,000 psi across the entire bore size and mounting style range. Non-tie rod construction with bolt-on gland and robust Tri-Lip rod sealing system offer superior performance. Head and cap are bolted to flanges that are threaded to each end of the cylinder body and offer several lifetime ownership advantages.

- Improved fatigue life compared to welded flange construction
- Easier to service than tie rod styles
- Clean appearance improves machine aesthetics
- Lower weight in longer strokes

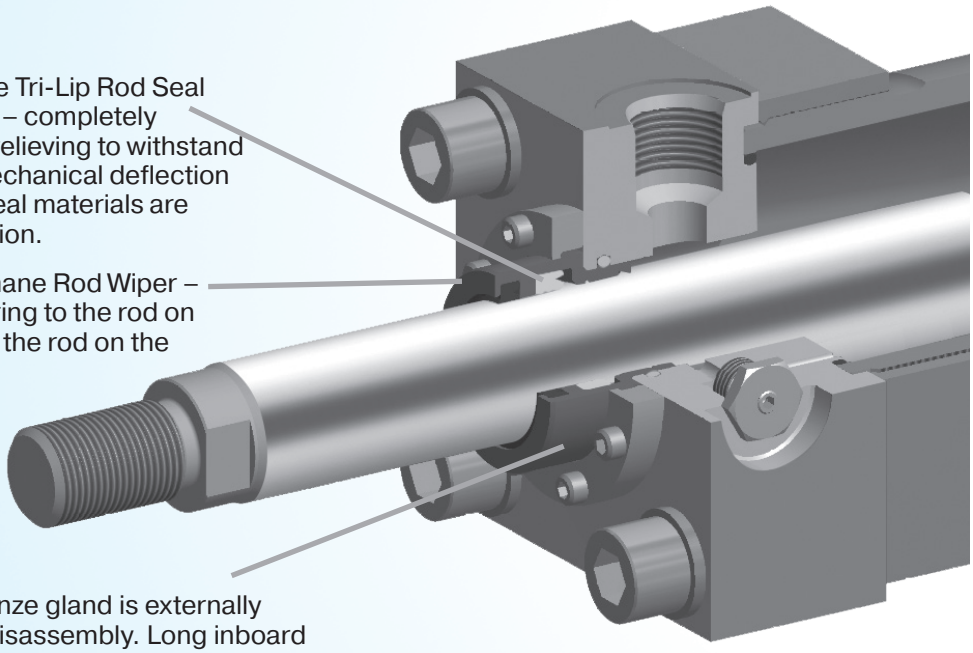

Primary Seal – Polyurethane Tri-Lip Rod Seal is a proven leak proof design – completely self-compensating and self-relieving to withstand variations and conform to mechanical deflection that may occur. Alternative seal materials are available to suit your application.

Secondary Seal – Polyurethane Rod Wiper – wipes clean any oil film adhering to the rod on the extend stroke and cleans the rod on the return stroke.

Rod Gland Assembly – Bronze gland is externally removable without cylinder disassembly. Long inboard bearing surface is ahead of the seals assuring lubrication by cylinder operating fluid.

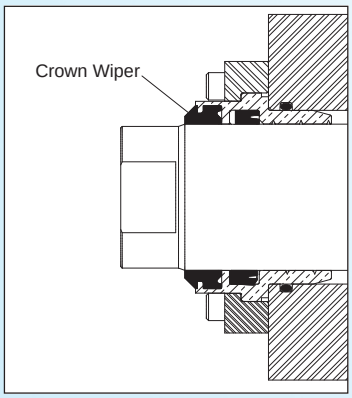

Parker Crown Wiper™ for Series HS2 1.50"-6.00" and HS3 7.00" & 8.00" bore – For environments that contain fine abrasive particulate specify the Crown Wiper option. The Crown Wiper is a proven superior alternative to piston rod end boots or metallic wipers that can ingest particulate. It has a sharp leading edge to effectively clean the piston rod and a beveled shape to prevent contaminant intrusion by channeling it away from the gland. It also acts as a secondary seal to wipe clean any oil film adhering to the rod on the extend stroke.

Select Crown Wiper for dirty environment to maintain HAS integrity.

D Cylinder

⚠ PROP 65 WARNING **WARNING:** This product can expose you to chemicals including Lead and Lead Compounds which are known to the State of California to cause cancer and birth defects or other reproductive harm. For more information go to www.P65Warnings.ca.gov

Standard Specifications

- Heavy Duty Service – ANSI/(NFPA) T3.6.7R3 - 2009 Specifications and Mounting Dimension Standards
- Standard Construction – Square Head – Bolted Design
- Nominal Pressure – 3000 psi[1]
- Standard Fluid – Hydraulic Oil
- Standard Temperature – –10°F to +165°F[2]
- Bore Diameters – 2.00" through 8.00"

In line with our policy of continuing product improvement, specifications in this catalog are subject to change.

Note: Series HS2 and HS3 Hydraulic Cylinders fully meet ANSI/(NFPA) T3.6.7R3 - 2009 Specifications and Mounting Dimension Standards for Square Head Industrial Fluid Power Cylinders.

- Piston Rod Diameter – 1.00" through 5.500"
- Mounting Styles – 11 standard styles at various application ratings
- Strokes – Available in any practical stroke length. See HS2 & HS3 Family Model Number / How to Order page for Series HS2 & HS3 minimum stroke lengths.
- Cushions – Optional at either end or both ends of stroke. "Float Check" standard at cap end of 2.00" - 6.00" bore.
- Rod Ends – Four Standard Choices – Specials to Order

Most of the illustrated mounting styles shown below are available in double rod cylinders.

Available Mounting Styles

Basic

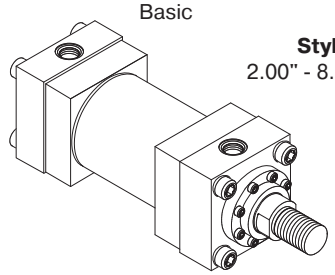

Style T
2.00" - 8.00"

(NFPA MX0)

Side Lug

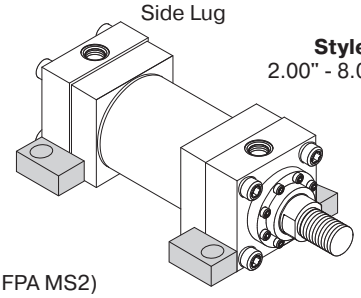

Style C
2.00" - 8.00"

(NFPA MS2)

Head Rectangular

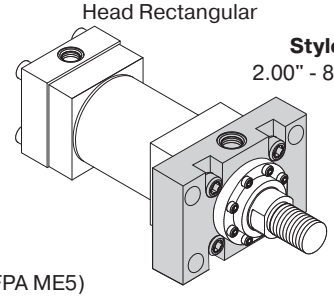

Style JJ
2.00" - 8.00"

(NFPA ME5)

Cap Rectangular

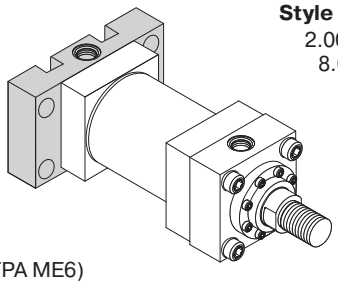

Style HH
2.00" - 8.00"

(NFPA ME6)

Cap Fixed Clevis

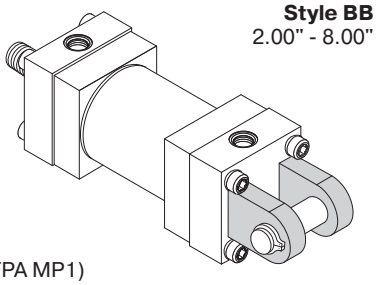

Style BB
2.00" - 8.00"

(NFPA MP1)

Head Trunnion

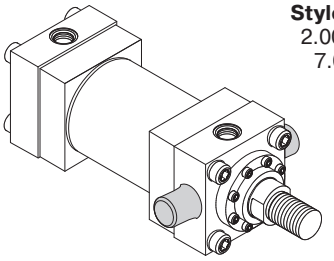

Style D
2.00" - 7.00"

(NFPA MT1)

Cap Trunnion

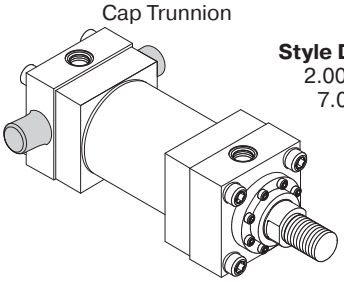

Style DB
2.00" - 7.00"

(NFPA MT2)

Intermediate Fixed Trunnion

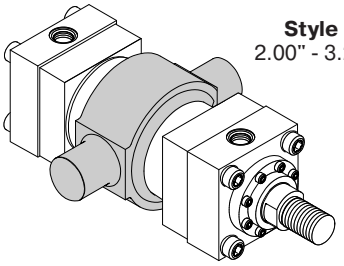

Style DD
2.00" - 3.25"

(NFPA MT4)

HD Intermediate Fixed Trunnion

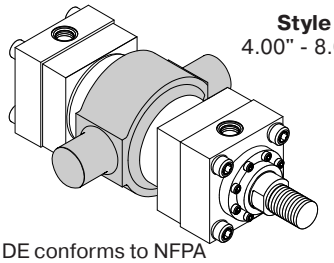

Style DE
4.00" - 8.00"

Style DE conforms to NFPA dimensional standard.

Spherical Bearing

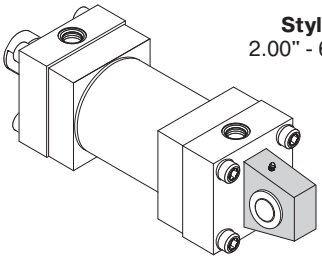

Style SB
2.00" - 6.00"

HD Spherical Bearing

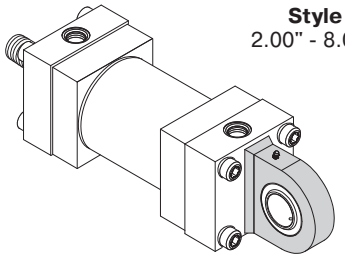

Style SE
2.00" - 8.00"

Double Rod Cylinders

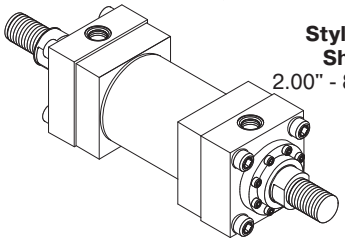

Style KT Shown
2.00" - 8.00"

⚠ PROP 65 WARNING **WARNING:** This product can expose you to chemicals including Lead and Lead Compounds which are known to the State of California to cause cancer and birth defects or other reproductive harm. For more information go to www.P65Warnings.ca.gov

Rod End Dimensions

Thread Style 4 (NFPA Style SM)
Small Male

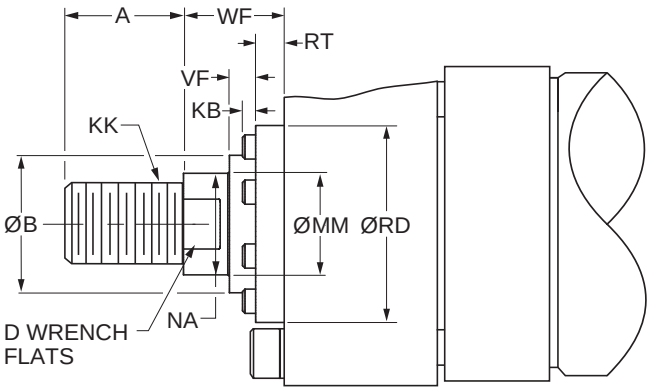

Thread Style 8 (NFPA Style IM)
Intermediate Male

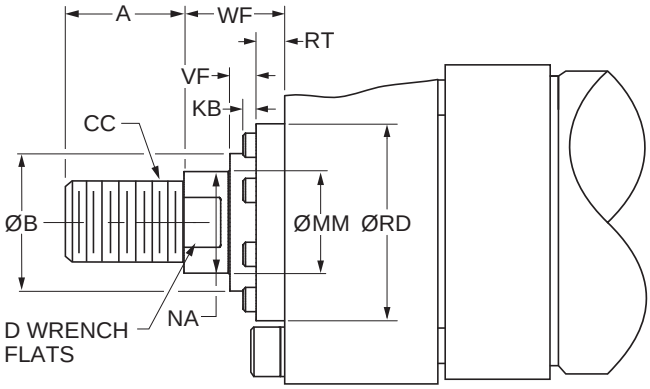

Rod End Dimensions

Bore Ø	Rod No.	MM Rod Ø	Thread Style 8 CC	Thread Style 4 KK	A	B Ø +.000 -.002	D	F	KB	NA	RD	RT	V	VF	W	WF
1.50	1 (Std.)	0.625	1/2-20	7/16-20	0.75	1.124	0.50	0.38	0.03	0.56	1.94	0.36	0.25	0.27	0.63	1.00
	2	1.000	7/8-14	3/4-16	1.13	1.499	0.88	0.38	0.03	0.94	2.38	0.36	0.50	0.52	1.00	1.38
2.00	1 (Std.)	1.000	7/8-14	3/4-16	1.13	1.499	0.88	0.63	0.03	0.94	2.38	0.36	0.25	0.52	0.75	1.38
	2	1.375	1 1/4-12	1-14	1.63	1.999	1.13	0.63	0.19	1.31	2.87	0.36	0.38	0.64	1.00	1.63
2.50	1 (Std.)	1.000	7/8-14	3/4-16	1.13	1.499	0.88	0.63	0.03	0.94	2.38	0.36	0.25	0.52	0.75	1.38
	2	1.750	1 1/2-12	1 1/4-12	2.00	2.374	1.50	0.63	0.03	1.69	3.47	0.60	0.50	0.53	1.25	1.88
	3	1.375	1 1/4-12	1-14	1.63	1.999	1.13	0.63	0.19	1.31	2.87	0.36	0.38	0.64	1.00	1.63
3.25	1 (Std.)	1.375	1 1/4-12	1-14	1.63	1.999	1.13	0.75	0.19	1.31	2.87	0.36	0.25	0.64	0.88	1.63
	2	2.000	1 3/4-12	1 1/2-12	2.25	2.624	1.69	0.75	0.13	1.94	3.72	0.60	0.38	0.53	1.25	2.00
	3	1.750	1 1/2-12	1 1/4-12	2.00	2.374	1.50	0.75	0.03	1.69	3.47	0.60	0.38	0.53	1.13	1.88
4.00	1 (Std.)	1.750	1 1/2-12	1 1/4-12	2.00	2.374	1.50	0.88	0.03	1.69	3.47	0.60	0.25	0.53	1.00	1.88
	2	2.500	2 1/4-12	1 7/8-12	3.00	3.124	2.06	0.88	0.25	2.38	4.25	0.60	0.38	0.65	1.38	2.25
	3	2.000	1 3/4-12	1 1/2-12	2.25	2.624	1.69	0.88	0.13	1.94	3.72	0.60	0.25	0.53	1.13	2.00
5.00	1 (Std.)	2.000	1 3/4-12	1 1/2-12	2.25	2.624	1.69	0.88	0.13	1.94	3.72	0.60	0.25	0.53	1.13	2.00
	2	3.500	3 1/4-12	2 1/2-12	3.50	4.249	3.00	0.88	-	3.38	5.76	0.91	0.38	0.34	1.38	2.25
	3	2.500	2 1/4-12	1 7/8-12	3.00	3.124	2.06	0.88	0.25	2.38	4.25	0.60	0.38	0.65	1.38	2.25
	4	3.000	2 3/4-12	2 1/4-12	3.50	3.749	2.63	0.88	-	2.88	5.26	0.85	0.38	0.41	1.38	2.25
6.00	1 (Std.)	2.500	2 1/4-12	1 7/8-12	3.00	3.124	2.06	1.00	0.25	2.38	4.25	0.60	0.25	0.65	1.25	2.25
	2	4.000	3 3/4-12	3-12	4.00	4.749	3.38	1.00	-	3.88	6.31	0.91	0.25	0.34	1.25	2.25
	3	3.000	2 3/4-12	2 1/4-12	3.50	3.749	2.63	1.00	-	2.88	5.26	0.85	0.25	0.41	1.25	2.25
	4	3.500	3 1/4-12	2 1/2-12	3.50	4.249	3.00	1.00	-	3.38	5.76	0.91	0.25	0.34	1.25	2.25

"Special" Thread Style 3
Special thread, extension, rod eye, blank, etc., are also available.

To order, specify "Style 3" and give desired dimensions for KK, A, W or WF.
If otherwise special, furnish dimensioned sketch.

⚠ **PROP 65 WARNING** **WARNING:** This product can expose you to chemicals including Lead and Lead Compounds which are known to the State of California to cause cancer and birth defects or other reproductive harm. For more information go to www.P65Warnings.ca.gov

Rod End Dimensions

Thread Style 9[2]
(NFPA Style SF) Small Female

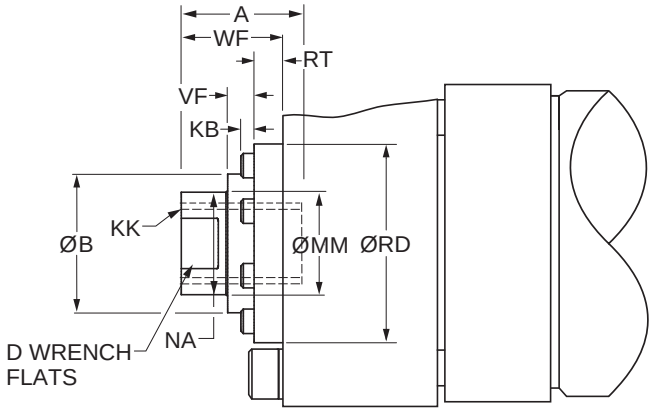

Style 55[1]
Flanged Rod End

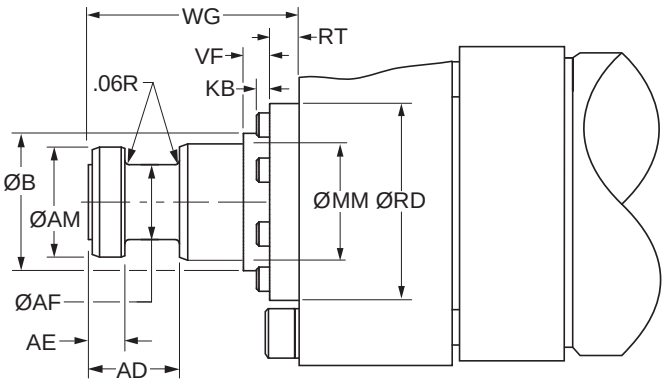

Rod End Dimensions

Bore Ø	Rod No.	MM Rod Ø	Thread Style 9 KK	A	AD	AE +.001 -.001	AF Ø	AM Ø	B Ø +.000 -.002	D	KB	NA	RD	RT	VF	WF	WG
1.50	1 (Std.)	0.625	7/16-20	0.75	0.63	0.249	0.38	0.57	1.124	0.50	0.03	0.56	1.94	0.36	0.27	1.00	1.75
	2	1.000	3/4-16	1.13	0.94	0.374	0.69	0.95	1.499	0.88	0.03	0.94	2.38	0.36	0.52	1.38	2.38
2.00	1 (Std.)	1.000	3/4-16	1.13	0.94	0.374	0.69	0.95	1.499	0.88	0.03	0.94	2.38	0.36	0.52	1.38	2.38
	2	1.375	1-14	1.63	1.06	0.374	0.88	1.32	1.999	1.13	0.19	1.31	2.87	0.36	0.64	1.63	2.75
2.50	1 (Std.)	1.000	3/4-16	1.13	0.94	0.374	0.69	0.95	1.499	0.88	0.03	0.94	2.38	0.36	0.52	1.38	2.38
	2	1.750	1 1/4-12	2.00	1.31	0.499	1.13	1.70	2.374	1.50	0.03	1.69	3.47	0.60	0.53	1.88	3.13
	3	1.375	1-14	1.63	1.06	0.374	0.88	1.32	1.999	1.13	0.19	1.31	2.87	0.36	0.64	1.63	2.75
3.25	1 (Std.)	1.375	1-14	1.63	1.06	0.374	0.88	1.32	1.999	1.13	0.19	1.31	2.87	0.36	0.64	1.63	2.75
	2	2.000	1 1/2-12	2.25	1.69	0.624	1.38	1.95	2.624	1.69	0.13	1.94	3.72	0.60	0.53	2.00	3.75
	3	1.750	1 1/4-12	2.00	1.31	0.499	1.13	1.70	2.374	1.50	0.03	1.69	3.47	0.60	0.53	1.88	3.13
4.00	1 (Std.)	1.750	1 1/4-12	2.00	1.31	0.499	1.13	1.70	2.374	1.50	0.03	1.69	3.47	0.60	0.53	1.88	3.13
	2	2.500	1 7/8-12	3.00	1.94	0.749	1.75	2.45	3.124	2.06	0.25	2.38	4.25	0.60	0.65	2.25	4.50
	3	2.000	1 1/2-12	2.25	1.69	0.624	1.38	1.95	2.624	1.69	0.13	1.94	3.72	0.60	0.53	2.00	3.75
5.00	1 (Std.)	2.000	1 1/2-12	2.25	1.69	0.624	1.38	1.95	2.624	1.69	0.13	1.94	3.72	0.60	0.53	2.00	3.75
	2	3.500	2 1/2-12	3.50	2.69	0.999	2.50	3.45	4.249	3.00	-	3.38	5.76	0.91	0.34	2.25	5.63
	3	2.500	1 7/8-12	3.00	1.94	0.749	1.75	2.45	3.124	2.06	0.25	2.38	4.25	0.60	0.65	2.25	4.50
	4	3.000	2 1/4-12	3.50	2.44	0.874	2.25	2.95	3.749	2.63	-	2.88	5.26	0.85	0.41	2.25	4.88
6.00	1 (Std.)	2.500	1 7/8-12	3.00	1.94	0.749	1.75	2.45	3.124	2.06	0.25	2.38	4.25	0.60	0.65	2.25	4.50
	2	4.000	3-12	4.00	2.69	0.999	3.00	3.95	4.749	3.38	-	3.88	6.31	0.91	0.34	2.25	5.75
	3	3.000	2 1/4-12	3.50	2.44	0.874	2.25	2.95	3.749	2.63	-	2.88	5.26	0.85	0.41	2.25	4.88
	4	3.500	2 1/2-12	3.50	2.69	0.999	2.50	3.45	4.249	3.00	-	3.38	5.76	0.91	0.34	2.25	5.63

"Special" Thread Style 3
Special thread, extension, rod eye, blank, etc., are also available.

To order, specify "Style 3" and give desired dimensions for KK, A, W or WF.
If otherwise special, furnish dimensioned sketch.

[1] For special WG dimension, specify "Style 3" and give desired dimension for WG. For other changes, place "S" in the model code, and describe rod end with dimensioned sketch.

[2] Style 9 stroke restrictions may apply. See Style 9 Minimum Stroke Table on How to Order page for details.

⚠ PROP 65 WARNING **WARNING:** This product can expose you to chemicals including Lead and Lead Compounds which are known to the State of California to cause cancer and birth defects or other reproductive harm. For more information go to www.P65Warnings.ca.gov

HS2 & HS3 Family Model Code

5.00	C	K	BB	P		HS2	H	N	A
Bore Dia.	Cushion Head	Double Rod End Cylinder	Mounting Style	Mounting Modification	Combination Mounting Style[5]	Series Designator	Piston Seal	Piston Magnet	Gland & Seal

Bore Dia.

Specify bore dia. in inches
- 2.00
- 2.50
- 3.25
- 4.00
- 5.00
- 6.00
- 7.00
- 8.00

Cushion Head

Use "C" only if head end cushion is required.

Double Rod End Cylinder

Use "K" only if a double rod end cylinder is required.[1]

Mounting Style

Mounting style offering varies by series. See 'Standard Specifications' pages for availability.
- T = Basic, No Mount
- JJ = Head Rectangular
- HH = Cap Rectangular
- C = Side Lug[2]
- BB = Cap Fixed Clevis
- D = Head Trunnion
- DB = Cap Trunnion
- DD = Intermediate Fixed Trunnion[3]
- DE = Heavy Duty Intermediate Fixed Trunnion[3]
- SB = Spherical Bearing
- SE = Heavy Duty Spherical Bearing (Consult Factory)[4]

Mounting Modification

- P = Use only if Thrust Key required. (Style C or F.)
- M = Use only for Manifold Port O-Ring Seal. Applies to C Mount only.

Combination Mounting Style[5]

Any practical mounting style listed.

Series Designator

- 2.00"-6.00" Bore HS2
- 7.00"-8.00" Bore HS3

Piston Seal

- H = Parker HP (standard) Piston Seal
- K = Parker KP (universal) Piston Seal[6]
- R = Parker RP (extrusion resistant) Piston Seal
- W = Parker WP (mixed media) Piston Seal

Piston Magnet

- N = No Magnet
- 3 = Magnet Piston with SS Cylinder Tube for Global Switches
- 7 = Magnet with Carbon Steel Cylinder Tube for ALS Switches

Gland & Seal

HS2, HS3
- H = Bolt-on Gland Class 1 Service Standard. Additional Seal Classes are available. See Seal Code for details.
- K = Bolt-on Lipseal Gland with Buffer Seal

All Series
- F = Gland with dual PTFE Rod Seals and PTFE Wiperseal[6] (Low Friction)

Series HS2 / HS3 Minimum Stroke Table

	Centered Manifold Mount	Head/Cap Manifold Mount	
Bore	**All Mounts (Less DD)**	**All Mounts (Less DD)**	**DD Mounts**
2.00	9	2	4
2.50	9	2	4
3.25	9	2	5
4.00	9	2	5
5.00	9	2	6
6.00	10	3	7
7.00	11	4	9
8.00	11	3	9

Shaded boxes identify required model number fields.

[1] Available mounting styles for K Type cylinders are located at the end of Section A. When ordering a double rod end cylinder, the piston rod number and piston rod end threads are to be specified for both rod ends.

The model number should be created as viewing the primary rod end on the left hand side.
Example: K Type Cylinder:
4.00CKTDHS2LT14A28AC10.000

[2] Mounting Styles C and F should have a minimum stroke length equal to or greater than their bore size.

[3] Specify XI dimension.

[4] Special mounting styles that do not resemble a standard catalog offering will be designated as style TX by the factory. Consult factory.

[5] In general, the model numbers as read left to right corresponding to the cylinder as viewed from left to right with the primary end at the left. The second or subsequent mountings are mountings called out as they appear in the assembly moving away from the rod end. Except when tie rod extension mountings are part of a combination, all combinations should have a "S" (Special) in the model code and a note in the body of the order clarifying the mounting arrangement. The "P", as used to define a thrust key is not considered to be a mounting. However it is located at the primary end.

[6] Piston seal code K and Gland & Seal code F must be selected for Class 8 service.

⚠ **PROP 65 WARNING** **WARNING:** This product can expose you to chemicals including Lead and Lead Compounds which are known to the State of California to cause cancer and birth defects or other reproductive harm. For more information go to www.P65Warnings.ca.gov

HS2 & HS3 Family Model Code

-	1	S	1	4	2	A	C	16.000
Port Type	Seals	Special Modification	Piston Rod Number[9]	Piston Rod End	Piston Rod Alternate Thread[12]	Piston Rod Threads	Cushion Cap	Stroke[8]

Seals
- 1 = Standard Seals
- 4 = Low Temperature Seals
- 5 = Fluorocarbon Seals
- 8 = Energized PTFE Seals
- E = Fluorocarbon Seals – Piston Rod only
- N = High Temperature Rod Gland[7]

Piston Rod Number
- 1
- 2
- 3
- 4
- 5

Special Modification
Use only if special modifications are required:
- Special Seals
- Stop Tube[8]
- Stroke Adjusters
- Tie Rod Supports
- Other

Piston Rod Alternate Thread
Use only for male thread two times longer than standard.

Cushion Cap
- C = Standard Floating Cushion Bushing Design

2.00" - 6.00" Bore
- F = Solid Cap Orifice Design

Stroke
Specify in inches

Port Type
- - = HAS Standard

Piston Rod Threads
- A = UNF Standard Integral Cut Thread
- H = UNF Optional High Strength Stud (Style 4 through 2.000" rod only)
- M = Metric[13]
- N = No Thread[14]

Piston Rod End

4	=	Style 4 Small Male
4B	=	Style 4 Small Male with Buffer Seal Gland
7	=	Style 7 Female Thread for Spherical Rod Eye for Piston Rod Codes larger than Code #1 (Style SB only)
7B	=	Style 7 Female Thread with Buffer Seal Gland
8	=	Style 8 Intermediate Male
8B	=	Style 8 Intermediate Male with Buffer Seal Gland
9	=	Style 9 Short Female[10]
9B	=	Style 9 Short Female[10] with Buffer Seal Gland
55	=	Style 55 Rod End for Flange Coupling
55B	=	Style 55 Rod End with Buffer Seal Gland
3	=	Style 3 Special (Specify)[11]
3B	=	Style 3 Special (Specify)[11] with Buffer Seal Gland

Seal M option must be specified (mounting modification), applies to mounting style C only.

Shaded boxes identify required model number fields.

7 Energized PTFE rod seals & wiperseal. All other cylinder seals are fluorocarbon.

8 S = Stop Tube. Specify: stop tube length, net stroke and gross stroke. Gross stroke = stop tube length + net stroke. Gross stroke to be placed in the model number field.

Example:

2.000 inches long stop tube
+14.000 inches net stroke
16.000 inches gross stroke

See tables on these pages for minimum allowable strokes for Series HS2 and Piston Rod End Styles 9 & 9B.

9 Refer to Rod buckling chart in Section H to assure rod number selected will not buckle under load.

10 Style 9 stroke restrictions may apply. See Style 9 Minimum Stroke Table for details.

11 Provide dimensions for KK, A, W or WF. If otherwise special, furnish dimensioned sketch.

12 Available only in combination with Style 4 or Style 8.

13 See Section G for detailed information regarding standard metric rod end thread sizes.

14 Must be specified for Piston Rod End Style 55.

Style 9 Minimum Stroke Table

Bore Ø	Rod Ø	Minimum Stroke	
		Style 9	Style 9B
8.00	3.500	1.500	1.06
	4.000	1.500	1.06
	4.500	2.375	1.94
	5.000	2.875	2.06
	5.500	3.625	2.81

PROP 65 WARNING **WARNING:** This product can expose you to chemicals including Lead and Lead Compounds which are known to the State of California to cause cancer and birth defects or other reproductive harm. For more information go to www.P65Warnings.ca.gov

The weights shown below are for standard Series HS2 and HS3 hydraulic cylinders with various diameter piston rods. To determine the net weight of a cylinder, first select the proper basic weight for zero stroke, then calculate the weight of the cylinder stroke and add the result to the basic weight.

Determine oil volume weight, by multiplying Reservoir Oil Weight by cylinder stroke. Select Motor weight from table B, add to basic cylinder weight, plus base weight of HAS.

Table A Cylinder weights, in pounds, for Series HS2 and HS3 7.00" - 8.00" hydraulic cylinders

Bore Ø	Rod Ø	Single Rod Cylinders Basic Weight Zero Stroke			Weight Add Per Inch Of Stroke Total HAS System	Double Rod Cylinders Basic Weight Zero Stroke		Weight Add Per Inch Of Stroke Total HAS System
		T	C,D,DB,DD,DE	BB,HH,JJ,SB,SE		KT	KC, KD, KDD, KDE, KJJ	
2.00	1.000	13.6	15.2	15.3	0.78	16.6	18.9	0.98
	1.375	15.5	19.1	19.2	1.06	21.4	22.7	1.46
2.50	1.000	19.5	22	22.1	1.04	23.5	27.1	1.34
	1.750	25	28	28.1	1.71	29.5	32.6	2.41
3.25	1.375	37.3	46.3	46.5	1.82	48.3	57.5	2.22
	2.000	42.3	51.3	51.5	2.49	53.3	62.5	3.39
4.00	1.750	55.6	60.6	60.8	2.45	66.6	70.8	3.15
	2.500	59.6	65.6	65.8	3.52	99.6	104.8	4.92
5.00	2.000	92.1	98.1	98.8	3.65	112.1	118.8	4.55
	3.500	104.1	102.1	102.8	6.14	133.1	139.8	8.84
6.00	2.500	149.6	157.6	158.6	5.71	177.6	184.6	7.11
	4.000	157.6	164.6	165.6	8.72	206.6	215.6	12.22
7.00	3.000	271.1	280.1	281.9	7.26	358.1	378.9	9.26
	5.000	278.1	291.1	292.9	12.19	379.1	399.9	17.79
8.00	3.500	304.5	318.5	320.9	10.10	365.5	375.9	12.80
	5.500	342.5	351.5	353.9	15.60	432.5	455.9	22.30

HAS power unit base weight without motor / without oil: 51 lbs.

Table B Motor Weights

A09A	5.94	A14A	21.56
A09B	5.94	A14B	21.56
A09C	8.14	A14C	38.72
A09D	8.14	A14D	38.72
A09E	10.12	A14E	44.44
A09F	10.12	A14F	44.44
A10A	9.46	A14G	55.88
A10B	9.46	D09*	23.6
A10C	12.1	D12*	29.6
A10D	12.1	F17A	24.1
A11A	12.98		
A11B	12.98		
A11C	16.06		
A11D	16.06		
A11E	19.92		
A11F	18.92		

Steps:

1. Determine cylinder weight from Table A
   Bore, Rod, Mount, plus base stroke adder
2. Select Motor from Table B
3. Add values from Steps 1, 2 plus HAS base weight of 51 lbs. to determine HAS weight

⚠ **PROP 65 WARNING** **WARNING:** This product can expose you to chemicals including Lead and Lead Compounds which are known to the State of California to cause cancer and birth defects or other reproductive harm. For more information go to www.P65Warnings.ca.gov

Basic Mount

Style T

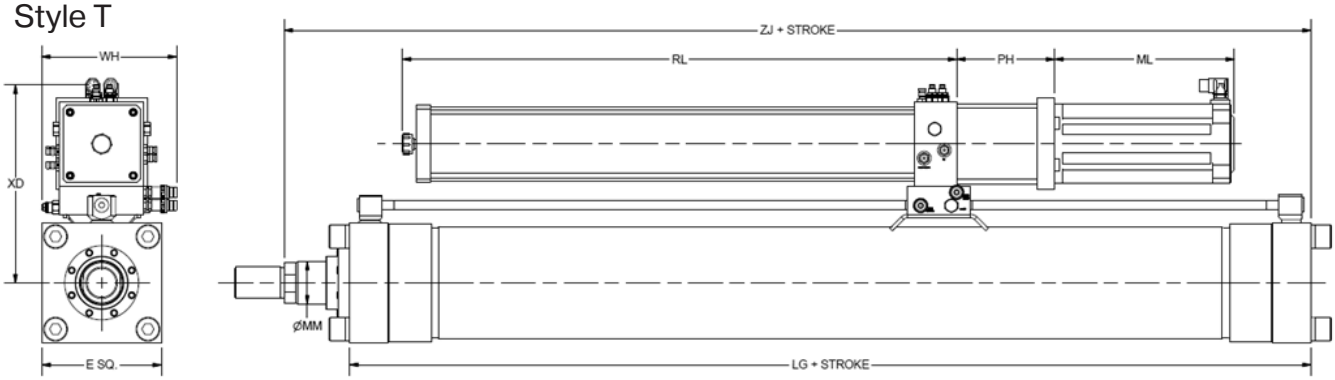

Table 1 – Dimensional and Mounting Data

Bore Ø	MM Rod Ø	E	Add Stroke LG	Add Stroke ZJ	XD	WH	Multiply by stroke "RL" and add 9.1 RL
2	1	3.00	4.63	6	11.559	10.7	0.12
	1.375			6.25			0.23
2.5	1	3.50	4.75	6.13	11.559	10.7	0.12
	1.75			6.63			0.37
	1.375			6.38			0.23
3.25	1.375	4.50	5.5	7.13	12.059	10.7	0.23
	2			7.5			0.48
	1.75			7.38			0.37
4	1.75	5.00	5.75	7.63	12.309	10.7	0.37
	2.5			8			0.75
	2			7.75			0.48
5	2	6.50	6.25	8.25	13.059	10.7	0.48
	3.5			8.5			1.47
	2.5			8.5			0.75
	3			8.5			1.08
6	2.5	7.50	7.38	9.63	13.88	10.7	0.75
	4			9.63			1.92
	3			9.63			1.08
	3.5			9.63			1.47
7	3	8.50	8.5	10.75	14.38	10.7	1.08
	5			10.75			3.00
	3.5			10.75			1.47
	4			10.75			1.92
	4.5			10.75			2.43
8	3.5	9.50	9.5	11.75	14.88	10.7	1.47
	5.5			11.75			3.63
	4			11.75			1.92
	4.5			11.75			2.43
	5			11.75			3.00

Motor	ML	PH Dimension G03	G04	G05	G06	G07	G08	G09	G10
A09D	6.01	6.56	6.66	6.77	6.87	6.98	7.09	7.18	7.29
A09E	7.01	6.56	6.66	6.77	6.87	6.98	7.09	7.18	7.29
A10A	5.87	6.56	6.66	6.77	6.87	6.98	7.09	7.18	7.29
A10B	5.87	6.56	6.66	6.77	6.87	6.98	7.09	7.18	7.29
A10C	6.87	6.56	6.66	6.77	6.87	6.98	7.09	7.18	7.29
A10D	6.87	6.56	6.66	6.77	6.87	6.98	7.09	7.18	7.29
A11B	6	6.97	7.07	7.18	7.28	7.39	7.50	7.59	7.70
A11D	7	6.97	7.07	7.18	7.28	7.39	7.50	7.59	7.70
A11F	8	6.97	7.07	7.18	7.28	7.39	7.50	7.59	7.70
A14D	8.81	7.36	7.46	7.57	7.67	7.78	7.89	7.98	8.09
A14F	10.8	7.36	7.46	9.95	7.67	7.78	7.89	7.98	8.09
A14G	8.81	7.36	7.46	9.95	7.67	7.78	7.89	7.98	8.09
D09A	7.13	6.17	6.27	6.38	6.48	6.59	6.70	3.43	6.90
D09B	7.13	6.17	6.27	6.38	6.48	6.59	6.70	6.79	6.90
D09C	7.13	6.17	6.27	6.38	6.48	6.59	6.70	6.79	6.90
D12A	8.31	6.17	6.27	6.38	6.48	6.59	6.70	6.79	6.90
D12B	8.31	6.17	6.27	6.38	6.48	6.59	6.70	6.79	6.90
D12C	8.31	6.17	6.27	6.38	6.48	6.59	6.70	6.79	6.90
F17A	6.43	6.73	6.83	6.94	7.04	7.15	7.26	7.35	7.46

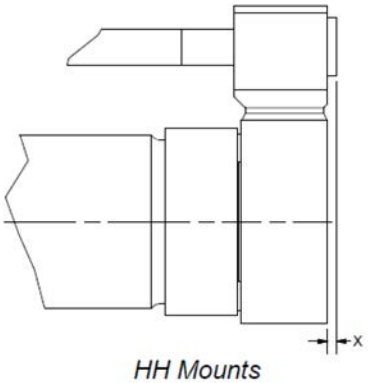

HH Mounts

Min RL = 11.4"

Transfer Tube Plug Offset	
Bore	X (inch)
2.00	.150
2.50	.150
3.25	.025
4.00	.025
5.00	.025

For other mounting options see catalog HY08-1314 Series 2HB

⚠ PROP 65 WARNING **WARNING:** This product can expose you to chemicals including Lead and Lead Compounds which are known to the State of California to cause cancer and birth defects or other reproductive harm. For more information go to www.P65Warnings.ca.gov

Hybrid Actuators with Continuous Feedback

Series HS2X and HS3X with Linear Displacement Transducer

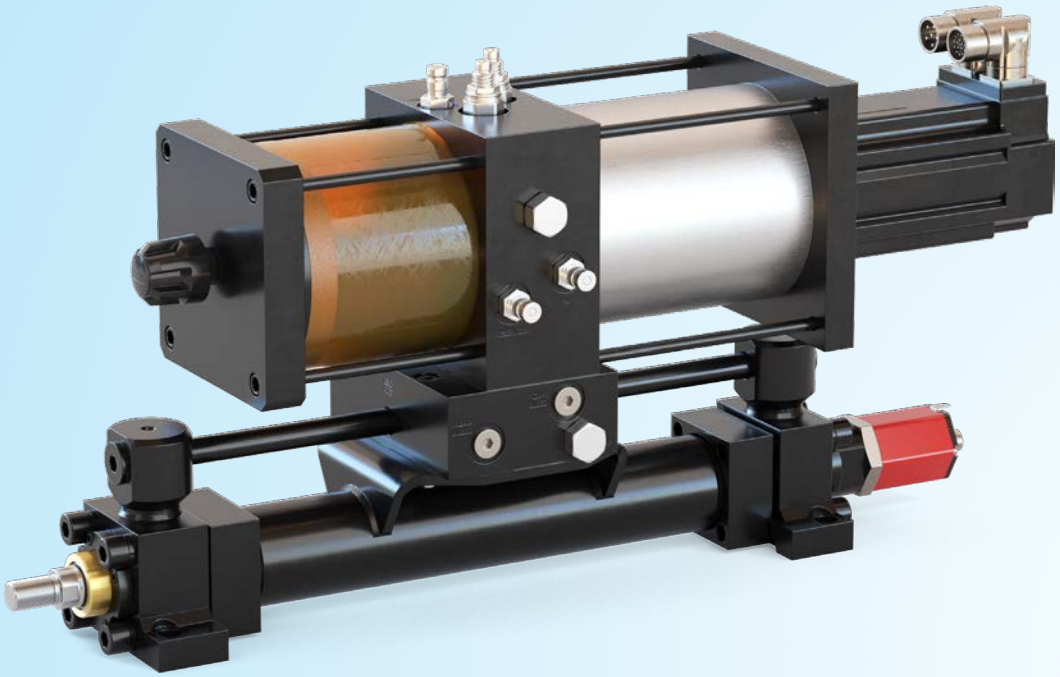

Series HS2X and HS3X with Wavescale

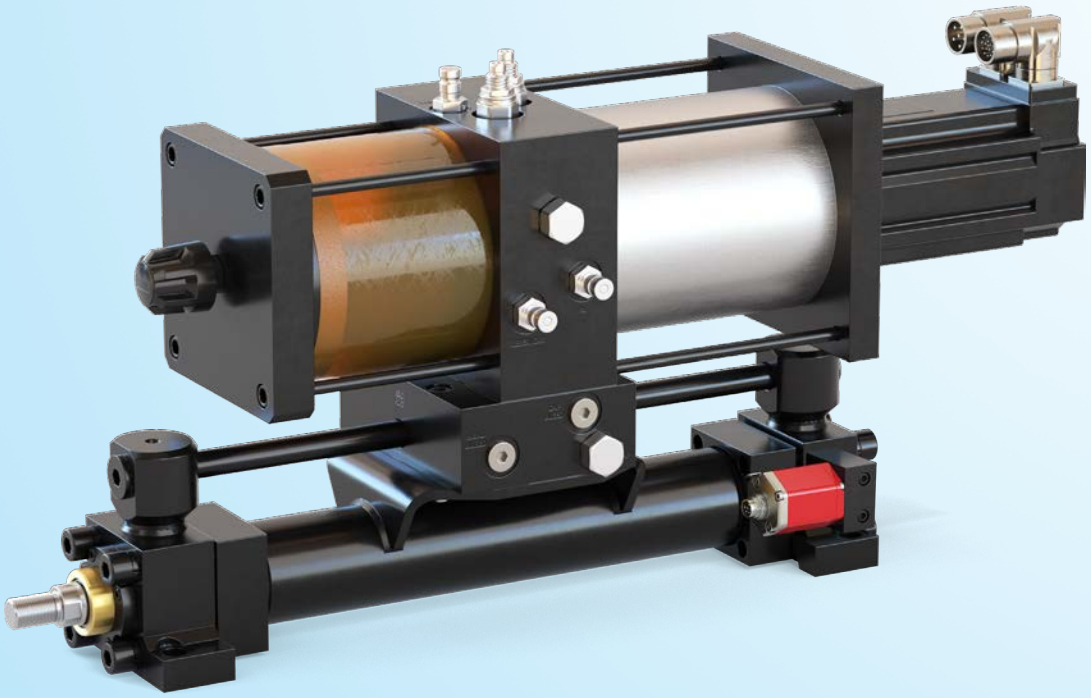

⚠ **PROP 65 WARNING** **WARNING:** This product can expose you to chemicals including Lead and Lead Compounds which are known to the State of California to cause cancer and birth defects or other reproductive harm. For more information go to www.P65Warnings.ca.gov

How To Order

Parker Series HS2X, HS3X cylinders can be described by a model number consisting of coded digits and letters used in a prescribed sequence. To develop a model number, select only those symbols that represent the cylinder required, and place them in the sequence indicated by the example in table opposite. The example makes use of all places, although many model numbers will not require them all as in the case where cushioning, double rod, or special modifications are not required or allowed.
For additional cylinder specifications and dimensions, see the Heavy Duty Hydraulic Cylinders catalog HY08-1314, How To Order pages.

When a Series HS2 actuator is ordered the following information must be developed.

1) The basic actuator model number including HS2 or HS3 under Series as shown in table on next page.

2) If a rod extension is required, specify rod end thread Style 3.

3) A seven digit code describing the valve and feedback type if any, and the probe supplier (Parker or customer).

Note: Cap end cushion is not allowed on LRT and WaveScale cylinders.

If a cylinder is to include a feedback device, the following information must be called out below the seven digit code:

Linear Displacement Transducer (LDT)

Analog
1) "Other Analog" Position Output Signal
2) Connection type for a separate cable (D60 or S32)
3) or Integral Electrical Cable Length from probe

Digital Position
When specifying Pulse Width Modulation (PWM), specify Internal or External Interrogation and the number of circulations

SSI
Specify data length, output format, resolution, filtering performance, and measuring direction

CAN
Specify protocol, baud rate, and resolution
For all "Other Outputs," consult factory

Linear Potentiometer (LRT)
1) Electrical connector position 1-4 cap end
2) Gross and net stroke if 1.750" rod dia. or smaller. Cylinders with rod sizes less than 2.000" require the addition of a 1.25" spacer on the cap end of the piston to carry the wiper assembly.

WaveScale
Electrical block position 1-4 cap end

Analog
1) "Other Analog" Position Output Signal
2) Connection type for a separate cable (D60 or S32)
3) or Integral Electrical Cable Length from probe

SSI
Specify data length, output format, resolution, filtering performance, and measuring direction

CAN
Specify protocol, baud rate, and resolution
For all "Other Outputs," **consult factory**

Other Feedback Device
1) Device Type, Manufacturer, and Model Number
2) Output Signal

D
Cylinder

Feedback Option

Parker Series HS2/HS3 Family actuators may NOT be ordered prepared for a feedback device. All feedback devices must be installed at the factory. The Parker LRT and WaveScale option may only be ordered installed at the factory. See the ordering code on the next two pages.

To specify another manufacturer's position sensor, place an "X" in the Feedback Option code and provide the manufacturer's name and model number. Parker will install any other type and brand of feedback as long as it is reasonably designed to fit into an NFPA type cylinder — consult factory.

⚠ **PROP 65 WARNING** **WARNING:** This product can expose you to chemicals including Lead and Lead Compounds which are known to the State of California to cause cancer and birth defects or other reproductive harm. For more information go to www.P65Warnings.ca.gov

HS2X & HS3X Family Model Code

5.00	C	-	BB	P		HS2X	H	N[2]	A
Bore Dia.	Cushion Head	Double Rod End Cylinder	Mounting Style	Mounting Modification	Combination Mounting Style[5]	Series Designator	Piston Seal	Piston Magnet	Gland & Seal

Bore Dia.
Specify bore dia. in inches
2.00
2.50
3.25
4.00
5.00
6.00
7.00
8.00

Cushion Head
Use "C" only if head end cushion is required.

Double Rod End Cylinder
Consult factory for double rod cylinders.

Mounting Style
Mounting style offering varies by series. See "Available Mounting and Manifold Position" Table

Mounting Modification
P = Use only if Thrust Key required. (Style C or F)

Combination Mounting Style[5]
Any practical mounting style listed.

Series Designator
Specify series
HS2X
HS3X

Piston Seal
H = Parker HP (standard) Piston Seal
K = Parker KP (universal) Piston Seal[3]
R = Parker RP (extrusion resistant) Piston Seal
W = Parker WP (mixed media) Piston Seal

Piston Magnet
N = No Magnet
7*= Magnet with Carbon Steel Cylinder Tube for ALS Switches

Gland & Seal
HS2, HS3

H = Bolt-on Gland with Tri Lip Rod Seal (for Class 1 & 4 service) – additional Seal Classes are available

All Series

F = Gland with dual PTFE Rod Seals and PTFE Wiperseal[3]

Valve Manifold

Code	Description
N	N - None

For applications requiring integral cap, consult factory.

Valve Pattern Group

Code	Description
N	N - Not Applicable

Valve Location

Code	Description
N	N - Not Applicable

D Cylinder

*Note: Consult Factory, switch not available for end of stroke measurement due to retaining flange. Stroke to go sensing only. For end of stroke indication, use EPS or CLS switch options

Shaded boxes identify required model number fields.

[1] Cap end cushion not available on LRT or WaveScale. Solid Cushion Orifice Design = F is not available on cylinders with probes but is available for Bolt on Manifolds.
[2] Magnets are not available for cylinders with probes.
[3] Piston seal code K and Gland & Seal code F must be selected for Class 8 service.

Note:
Consult current 2H/3H Family catalog HY08-1314 and 2HX / 3HX catalog HY08-1175 for complete dimensions, specifications and model number information.

⚠ **PROP 65 WARNING** **WARNING:** This product can expose you to chemicals including Lead and Lead Compounds which are known to the State of California to cause cancer and birth defects or other reproductive harm. For more information go to www.P65Warnings.ca.gov

HS2X & HS3X Family Model Code

-	1	S	1	4	2	A	C[1]	16.000
Port Type	Seals	Special Modification	Piston Rod Number	Piston Rod End	Piston Rod Alternate Thread	Piston Rod Threads	Cushion Cap	Stroke[4]

Port Type: - = HAS Standard

Seals:
- 1 = Standard Seals
- 3 = EPR Seals
- 6 = High Water Content Fluid
- N = High Temperature Rod Gland

Special Modification: Use only if special modifications are required:
- Special Seals
- Stop Tube[4]
- Tie Rod Supports
- Other

Piston Rod Number: 1, 2, 3, 4, 5

Piston Rod End:
- 4 = Style 4 Small Male
- 7 = Style 7 Female Thread for Spherical Rod Eye for Piston Rod Codes larger than Code #1 (Style SB only)
- 8 = Style 8 Intermediate Male
- 9 = Style 9 Short Female[5]
- 55 = Style 55 Rod End for Flange Coupling
- 3 = Style 3 Special (Specify)

Piston Rod Alternate Thread: Use only for male thread two times longer than standard.

Piston Rod Threads:
- A = UNF Standard Integral Cut Thread
- H = UNF Optional High Strength Stud (Style 4 through 2.000" rod only)
- M = Metric
- N = No Thread

Cushion Cap:
- C = Standard Floating Cushion Bushing Design
- 1.50" - 6.00" Bore
- F = Solid Cap Orifice Design

Stroke[4]: Specify in inches

Feedback Option

Code	Description
N	N - None
C	C - MTS LDT
F	F - LRT
B	B - Balluff LDT
W	W - WaveScale
X	X - Other, Please Specify

Feedback Furnished

Feedback Furnished		Feedback Options		
Code	Description	C	B	W
NF	NF - No Feedback			
1P	1P - Prepare to Accept - Piston rod will be drilled to accept a probe with an electrical stroke equal to the cylinder net stroke.	✓	✓	
FR	FR - LRT Installed			
V0	V0 - 0 Vdc to +10 Vdc	✓	✓	✓
V1	V1 - +10 Vdc to 0 Vdc	✓	✓	✓
A0	A0 - 4 mA to 20 mA	✓	✓	✓
A1	A1- 20 mA to 4 mA	✓	✓	✓
A4	A4 - Other Analog - Specify required output.	✓	✓	✓
DE	DE - PWM, External Interrogation	✓	✓	
DI	DI - PWM, Internal Interrogation	✓	✓	
SS	SS - SSI Output[6]	✓	✓	✓
R0	R0 - Start/Stop	✓	✓	
D4	D4 - Other Digital - Specify required output.	✓	✓	✓

Feedback Protective Enclosures

Code	Description
N	N - Not Applicable
A	A - False Stage for LDT probes with integral cable
B	B - False Stage for LDT probes with connector and separate cable
D	D - Light Duty Cover
F	F - Medium Duty Cover for LDT probes with integral cable
G	G - Medium Duty Cover for LDT probe with connector and separate cable

[4] S = Stop Tube. Specify: stop tube length, net stroke and gross stroke. Gross stroke = stop tube length + net stroke. Gross stroke to be placed in the model number field.

Example:

2.000 inches long stop tube
+14.000 inches net stroke
16.000 inches gross stroke

See tables for minimum allowable strokes and female Piston Rod End Styles.

[5] Style 9 stroke restrictions may apply.

[6] Refer to the "How To Order" page for information required for CAN and SSI output, Catalog HY08-1175-2.

⚠ PROP 65 WARNING **WARNING:** This product can expose you to chemicals including Lead and Lead Compounds which are known to the State of California to cause cancer and birth defects or other reproductive harm. For more information go to www.P65Warnings.ca.gov

Parker Series HSR (RDH) 2" - 8" Bore Heavy Duty Roundline Hydraulic Cylinders

Advanced Sealing Technology

All components are manufactured by Parker and designed for high performance, long service life, low friction and zero leakage.

- **Tri-lip rod seal** (3 sealing edges!) and bi-directional piston seal feature proven leak-free performance.
- **Durable polyurethane** material is used to maximize seal life.
- **Nitrile end seals** and backup rings on a smooth bore of the cylinder body for optimal sealing and elimination of extrusion problems.
- **Composite rod and piston wear rings** are internally lubricated for reduced friction and formulated for heavy-duty, load-bearing applications.
- **Standard rod material is case-hardened, hard chrome plated** and polished to an optimum finish.
- And since we make our own seals, **all seals have immediate availability** in other popular compounds.

RoHS compliant 2002/95/EC

Environmentally Friendly
RoHS-compliant materials

Switch-Ready

- **The Parker ALS Switch is the lowest cost point feedback solution** for carbon steel cylinders with a piston magnet ring.
- **Switches can be located anywhere along the stroke** and in any orientation.
- **Unique round body brackets** minimize installation time.
- **EPS & CLS threaded switches** are available for end-of-stroke sensing.

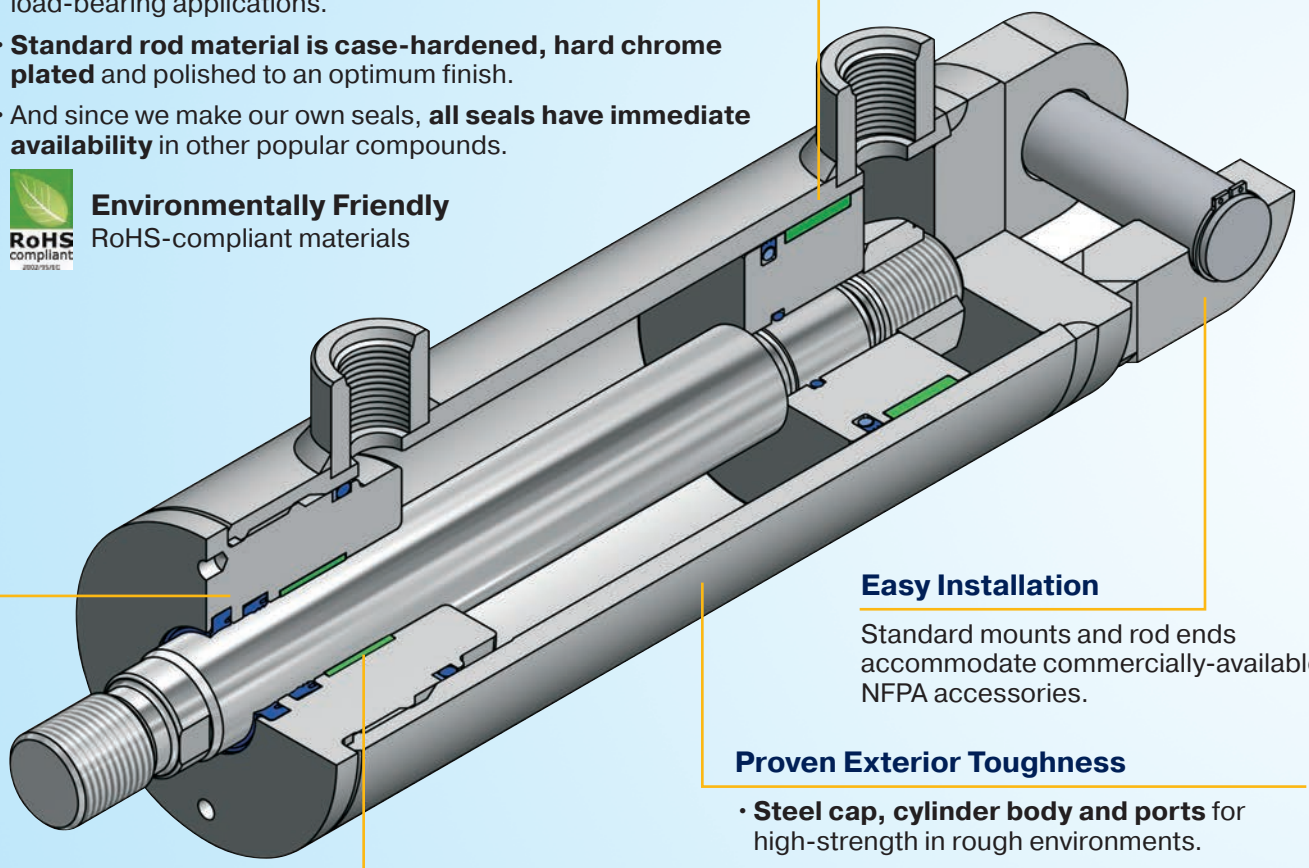

Easy Installation

Standard mounts and rod ends accommodate commercially-available NFPA accessories.

Proven Exterior Toughness

- **Steel cap, cylinder body and ports** for high-strength in rough environments.
- **Case-hardened, hard chrome plated** and polished carbon steel piston rod for damage resistance, long rod seal life and low friction.
- **Outboard urethane rod wiper seal** to remove external debris and adherents from the piston rod.
- **High quality paint coating** for interior or exterior applications.

Composite Wear Rings

Parker WearGard™ bearing materials are backed by over 30 years of manufacturing expertise.

- Heat stabilized and internally lubricated for **low friction and maximum service** life in any application.
- Strength characteristics meet or exceed most metals traditionally used in wear rings.

⚠ PROP 65 WARNING **WARNING:** This product can expose you to chemicals including Lead and Lead Compounds which are known to the State of California to cause cancer and birth defects or other reproductive harm. For more information go to www.P65Warnings.ca.gov

Available Mounting Styles

Basic, No Mount

Style T

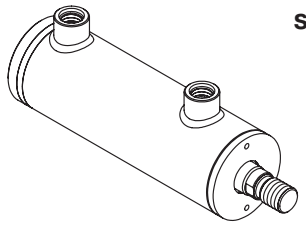

Cap Fixed Eye

Style B

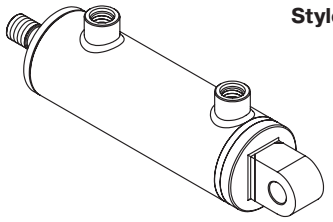

Cap Fixed Clevis

Style BB

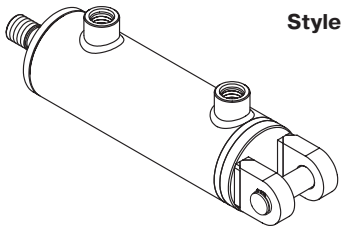

Spherical Bearing Cap End

Style SB/SBM

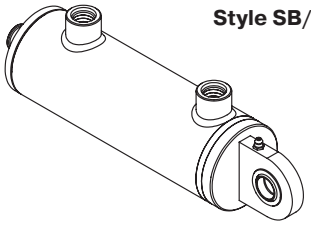

Crosstube Cap End

Style TT

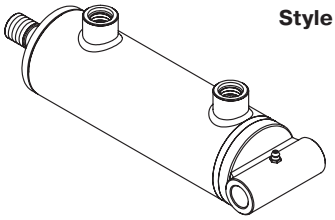

Intermediate Fixed Trunnion

Style DD

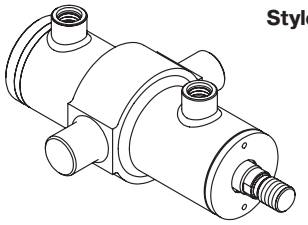

Round Head Flange

Style J

Style JP with close tolerance pilot

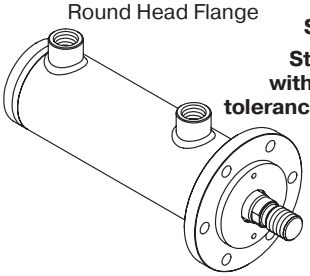

Round Cap Flange

Style H

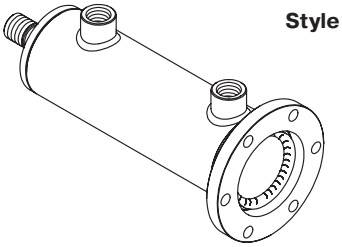

Double Rod Cylinders

Style KT Shown

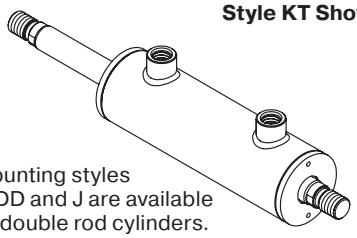

Mounting styles T, DD and J are available as double rod cylinders.

Custom Options and Modifications (consult factory)

- Special Heads, Caps, Pistons and Mounts
- Air Bleeds
- Double Rod End
- Oversize/Undersize Rod Diameters
- Extra Thick Chrome Plated Piston Rod
- Rod Materials (stainless steels, alloy steels, etc.)
- Rod Coating (Global Shield™)
- Nitrided Rod
- Pinned Rod to Piston
- Welded Rod to Piston
- Welded Rod End Accessory
- Extra Wrench Flats
- Rod Boot
- Parker Crown™ Wiper (Extreme Duty Non-Metallic Rod Wiper)
- Metallic Rod Wiper
- Seal Materials (additional compounds)
- PolyPak Seals
- Stop Tube
- Stroke Adjuster
- Point Feedback – ALS Switch (PNP/NPN Mid-Stroke Switch)
- Point Feedback – CLS-A Switch (Magnetically-Actuated End-Of-Stroke Limit Switch)
- Point Feedback – EPS-A Sensor (PNP End-Of-Stroke Proximity Sensor)
- Continuous Linear Position Feedback Linear Displacement Transducer (LDT)
- Fixed Cushions
- Chrome Plated Bore
- Nickel Plated Assembly
- Application-Specific Paint (Marine-Grade, Salt-Spray Rated, Caustic Washdown, etc.)
- Dual End Seals

⚠ **PROP 65 WARNING** **WARNING:** This product can expose you to chemicals including Lead and Lead Compounds which are known to the State of California to cause cancer and birth defects or other reproductive harm. For more information go to www.P65Warnings.ca.gov

HSR Model Code

2.00		BB	HSR	B	-	
Bore Diameter	Double Rod End Cylinder	Mounting Style	Series	Piston	Ports	Seals[6]

Bore Diameter

Specify bore dia. in inches
- 2.00
- 2.50
- 3.25
- 4.00
- 5.00
- 6.00
- 7.00
- 8.00

Double Rod End Cylinder

Specify "K" only if Double Rod Cylinder is required.[1]

Mounting Style

- T = Basic, No Mount
- B = Cap Fixed Eye
- BB = Cap Fixed Clevis
- SB = Spherical Bearing Cap End
- SBM = Spherical Bearing Cap End, Metric (3,000 psi rating)
- TT = Crosstube Cap End
- DD = Intermediate Fixed Trunnion[2]
- J = Round Head Flange
- JP = Round Head Flange with Pilot
- H = Round Cap Flange

Series

HSR

Piston

- B = Standard (Standard Seal with Wear Ring)
- K = Bronze Filled PTFE Seal with Wear Ring
- F = Low Friction Cylinder (All Seals)[3]
- 7 = Magnetic[4] (Standard Seal with Wear Ring and Magnet)

Ports

- = HAS Standard

Seals[6]

- Blank = Standard (Polyurethane, Class 1)
- 4 = Low Temperature Seals (Class 4)
- V = Fluorocarbon Seals (Class 5)
- K = Class 1 Seals with Bronze Filled PTFE Piston Seal[7]
- E = Fluorocarbon Rod Seal and Wiper Only[8]
- M = Metallic Rod Wiper, Standard Seals
- D = Metallic Rod Wiper, Fluorocarbon Seals

Shaded boxes identify the required model number fields.

1 Available standard mounting styles for K-type cylinders are T, DD and J/JP. When ordering a double rod cylinder, the piston rod number and piston rod thread style must be specified for both rod ends. The model number should be created as viewing the primary rod end on the left-hand side.

Example of a K-type cylinder:

4.00**K**DDHSRBT**1** **A28A**10.000

2 Specify XI dimension. See minimum and maximum XI dimensions on DD Intermediate Fixed Trunnion Mounting Page.

3 Includes low friction seals for the entire cylinder. Available with standard seals and Seal codes 2, X, 4, V and H.

4 Used with externally mounted ALS Switches. Includes seal and wear ring from standard piston. Available for 2" to 6.00" bore diameters. Switch operating temperature range is -13°F to +185°F. Switch position may be restricted for Mounting Style DD. Consult factory for other options.

5 See Seal Information pages for additional information.

6 Option used for Piston code 7 (Magnetic Piston).

7 Used for external chemical compatibility applications, not high temperature.

⚠ **PROP 65 WARNING** **WARNING:** This product can expose you to chemicals including Lead and Lead Compounds which are known to the State of California to cause cancer and birth defects or other reproductive harm. For more information go to www.P65Warnings.ca.gov

HSR Model Code

[ ]	1	4	[ ]	A	6.000
Special Modification	Piston Rod Number[9]	Piston Rod End	Piston Rod Material[12]	Piston Rod Threads	Stroke[14]
Specify "S" for special modification other than rod end, and then describe the modification in the item notes.	1 2 3 4 5	4 = Style 4 Small Male 7 = Style 7 Thread for Spherical Rod Eye[10] 8 = Style 8 Intermediate Male 9 = Style 9 Small Female[10] 55 = Style 55 For Flange Coupling 3 = Style 3 Special (specify)[11]	Blank = Standard Y = 17-4 PH Stainless Steel[12]	A = Standard (UNF) M = Metric[13] N = No Threads (only used for Style 55 or Style 3 rod ends)	Specify in inches (see Minimum Standard Stroke table below)

Minimum Standard Stroke

	Centered Manifold Mount	Head/Cap Manifold Mount	
Bore	All Mounts (Less DD)	All Mounts (Less DD)	DD Mounts
2.00	9.95	2.95	4.95
2.50	10.12	3.12	5.12
3.25	10.44	3.44	6.44
4.00	10.25	3.25	6.25
5.00	10.69	3.69	7.69
6.00	11.88	4.88	8.88
7.00	13.38	6.38	11.38
8.00	14.13	6.13	12.13

Shaded boxes identify the required model number fields.

9 Refer to the Stop Tubing and Piston Rod Selection Data pages in Catalog HY08-1320 to assure that the selected rod number will not buckle under load.

10 Style 7A (UNF threads) and Style 9 may require a minimum stroke. See Minimum Standard Stroke in table to the left for details.

11 Provide desired dimensions for KK (or CC), A and W. If otherwise special, supply a dimensioned sketch. Accessories welded to the rod end are available.

12 Other stainless steels (i.e. 303, 316) are available with a derated maximum operating pressure; consult factory.

13 For Style 7M, see page 15 Catalog HY08-1320 for details. For Styles 4M, 8M and 9M, see page 36 for details.

14 If a stop tube is required, specify **gross stroke** (net stroke + stop tube length) in the model number field, then place an "S" for special in the Special Modification field and specify the stop tube length in the item notes. For stroke length tolerance, see Stroke Data page in Catalog HY08-1320.

⚠ **PROP 65 WARNING** **WARNING:** This product can expose you to chemicals including Lead and Lead Compounds which are known to the State of California to cause cancer and birth defects or other reproductive harm. For more information go to www.P65Warnings.ca.gov

Cylinder Weights

The estimated weights shown below are for standard Series HSR hydraulic cylinders equipped with the different piston rod diameters. To determine the total net weight of a cylinder, first select the Basic Weight or the proper mount at zero stroke, then calculate the weight of the cylinder stroke and add the result to the Basic Weight, plus Motor and HAS weights.

Table A Cylinder weights, in pounds, for HSR Series hydraulic cylinders

Bore Ø	Rod No.	Single Rod Cylinders Base Weight at Zero Stroke					Weight Add Per Inch Of Stroke Total HAS System
		T	B, BB, SB/ SBM, TT	DD	J/JP	H	
2.00	1 (std)	5.0	6.6	9.7	7.3	6.4	0.77
	2	5.4	7.0	10.1	7.7	6.8	1.04
2.50	1 (std)	8.8	11.3	13.7	12.5	11.3	1.07
	2	9.4	11.9	14.3	13.2	12.0	1.70
	3	9.8	12.3	14.7	13.6	12.3	1.34
3.25	1 (std)	16.5	22.5	24.9	23.6	21.7	1.83
	2	17.2	23.2	25.6	24.2	22.4	2.47
	3	17.8	23.8	26.2	24.8	23.0	2.19
4.00	1 (std)	22.3	28.3	31.4	34.4	31.4	2.48
	2	24.0	30.0	33.1	36.1	33.1	3.46
	3	24.7	30.7	33.8	36.7	33.8	2.77
5.00	1 (std)	51.2	57.2	67.7	69.8	66.0	3.63
	2	52.9	58.9	69.4	71.5	67.7	6.15
	3	54.6	60.6	71.1	73.2	69.4	4.32
	4	56.8	62.8	73.3	75.4	71.6	5.16
6.00	1 (std)	75.7	83.7	102.8	106.5	100.9	5.69
	2	79.7	87.7	106.8	110.5	104.9	8.67
	3	81.9	89.9	109.0	112.7	107.2	6.53
	4	83.9	91.6	110.7	114.4	108.8	7.52
7.00	1 (std)	111.8	124.8	154.0	151.8	141.7	7.29
	2	116.1	129.1	158.3	156.1	146.0	12.18
	3	118.0	131.0	160.2	158.0	147.9	8.29
	4	122.0	135.0	164.2	162.0	151.9	9.43
	5	126.1	139.1	168.3	166.1	156.0	10.72
8.00	1 (std)	159.6	173.6	217.4	216.7	204.5	10.12
	2	166.9	180.9	224.7	224.0	211.8	15.62
	3	171.4	185.4	229.2	228.5	216.3	11.26
	4	175.5	189.5	233.3	232.6	220.4	12.55
	5	179.8	193.8	237.6	236.9	224.7	14.01

HAS power unit base weight without motor / without oil: 51 lbs.

Table B
Motor Weights

A09A	5.94
A09B	5.94
A09C	8.14
A09D	8.14
A09E	10.12
A09F	10.12
A10A	9.46
A10B	9.46
A10C	12.1
A10D	12.1
A11A	12.98
A11B	12.98
A11C	16.06
A11D	16.06
A11E	19.92
A11F	18.92
A14A	21.56
A14B	21.56
A14C	38.72
A14D	38.72
A14E	44.44
A14F	44.44
A14G	55.88
D09*	23.6
D12*	29.6
F17A	24.1

Steps:

1. Determine cylinder weight from Table A

   Bore, Rod, Mount, plus base stroke adder

2. Add value from Steps 1, plus HAS base weight of 51 lbs. to determine HAS weight

⚠ **PROP 65 WARNING** **WARNING:** This product can expose you to chemicals including Lead and Lead Compounds which are known to the State of California to cause cancer and birth defects or other reproductive harm. For more information go to www.P65Warnings.ca.gov

Basic Mount

Style T

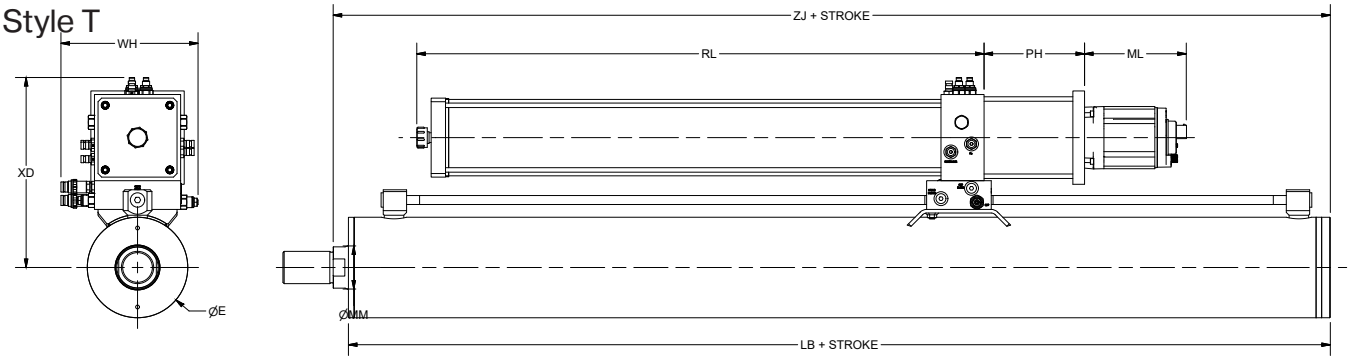

Table 1 – Dimensional and Mounting Data

Bore Ø	MM Rod Ø	E	Add Stroke LB	Add Stroke ZJ	XD	WH	Multiply by stroke "RL" and add 9.1 RL
2	1	2.38	4.81	5.50	11.7	10.7	0.12
	1.375			5.62			0.23
2.5	1	3.00	5.25	5.94	12.0	10.7	0.12
	1.75			6.19			0.37
	1.375			6.06			0.23
3.25	1.375	3.88	6.00	6.81	12.4	10.7	0.23
	2			7.00			0.48
	1.75			6.94			0.37
4	1.75	4.61	6.50	7.44	12.8	10.7	0.37
	2.5			7.56			0.75
	2			7.50			0.48
5	2	5.75	7.12	8.12	13.4	10.7	0.48
	3.5			8.18			1.47
	2.5			8.18			0.75
	3			8.18			1.08
6	2.5	7.00	8.37	9.43	14.0	10.7	0.75
	4			9.43			1.92
	3			9.43			1.08
	3.5			9.43			1.47
7	3	8.00	9.00	10.06	14.5	10.7	1.08
	5			10.19			3.00
	3.5			10.06			1.47
	4			10.06			1.92
	4.5			10.19			2.43
8	3.5	9.25	9.50	10.56	15.1	10.7	1.47
	5.5			10.68			3.63
	4			10.56			1.92
	4.5			10.68			2.43
	5			10.68			3.00

Motor	ML	PH Dimension G03	G04	G05	G06	G07	G08	G09	G10
A09D	6.01	6.56	6.66	6.77	6.87	6.98	7.09	7.18	7.29
A09E	7.01	6.56	6.66	6.77	6.87	6.98	7.09	7.18	7.29
A10A	5.87	6.56	6.66	6.77	6.87	6.98	7.09	7.18	7.29
A10B	5.87	6.56	6.66	6.77	6.87	6.98	7.09	7.18	7.29
A10C	6.87	6.56	6.66	6.77	6.87	6.98	7.09	7.18	7.29
A10D	6.87	6.56	6.66	6.77	6.87	6.98	7.09	7.18	7.29
A11B	6	6.97	7.07	7.18	7.28	7.39	7.50	7.59	7.70
A11D	7	6.97	7.07	7.18	7.28	7.39	7.50	7.59	7.70
A11F	8	6.97	7.07	7.18	7.28	7.39	7.50	7.59	7.70
A14D	8.81	7.36	7.46	7.57	7.67	7.78	7.89	7.98	8.09
A14F	10.8	7.36	7.46	9.95	7.67	7.78	7.89	7.98	8.09
A14G	8.81	7.36	7.46	9.95	7.67	7.78	7.89	7.98	8.09
D09A	7.13	6.17	6.27	6.38	6.48	6.59	6.70	3.43	6.90
D09B	7.13	6.17	6.27	6.38	6.48	6.59	6.70	6.79	6.90
D09C	7.13	6.17	6.27	6.38	6.48	6.59	6.70	6.79	6.90
D12A	8.31	6.17	6.27	6.38	6.48	6.59	6.70	6.79	6.90
D12B	8.31	6.17	6.27	6.38	6.48	6.59	6.70	6.79	6.90
D12C	8.31	6.17	6.27	6.38	6.48	6.59	6.70	6.79	6.90
F17A	6.43	6.73	6.83	6.94	7.04	7.15	7.26	7.35	7.46

Min RL = 11.4"

For other mounting options see catalog HY08-1320 Series RDH

⚠ PROP 65 WARNING **WARNING:** This product can expose you to chemicals including Lead and Lead Compounds which are known to the State of California to cause cancer and birth defects or other reproductive harm. For more information go to www.P65Warnings.ca.gov

How to Select your Hybrid Actuator

With the innovative design of the Hybrid Actuator, applying it to your system requires a hybrid approach to the selection as well. It requires a combination of basic hydraulic cylinder selection and Electromechanical Motor optimization. With a little twist on how we calculate input power.

For assistance in sizing, fill out the Application worksheet and email cylquote@support.parker.com or fax to (800) 892-1008.

Basic Cylinder sizing should be considered before beginning the HAS sizing. Certain mounting styles and or stroke length, may require stope tube, and rod column strength should be evaluated. This can be found in the Engineering Section of the 2H catalog HY08-1314-1. A link to this catalog is on page 2 of this catalog.

The steps below will help guide you through the selection process.

Determine Hybrid Actuator Thrust

Step 1. Select the proper bore size from table A, required to generate the desired Push force from Table A, of the Theoretical Push Force table. Note the Pressure required to generate this push force as will be needed during motor optimization.

Step 2. Confirm the selected Bore size cylinder with appropriate Rod Diameter will meet the required Pull or retract force from table B. Note the Pressure required to generate this pull force as will be needed during motor optimization.

Determine Hybrid Actuator Flow Requirements

Step 3. Determine the proper pump size from Table C, Cylinder Push Speed.

Based upon Bore Size previously selected, move right across chart C until the value is greater than the desired Push (extend) speed of the Hybrid Actuator, values are inches per second. The heading of that Column is the pump code required to meet your desired speed. If Hybrid Actuator is a double rode, skip this step and size based upon step 4.

Step 4. Repeat the process for Pull (retract) speed from Table D Cylinder Pull Speed.

Due to Rod area, pull speeds will be greater than push speeds, for this reason we typically add the bleed orifice in the Pull port of the actuator. This bleed orifice strips off a small amount of volume to run through a filter and if fitted, through the heat exchanger. If retract speeds are critical, and close to the charted value, you may wish to incorporate the Bleed Orifice on the Push end of the cylinder. More details on page 33 of this catalog.

⚠ **PROP 65 WARNING** **WARNING:** This product can expose you to chemicals including Lead and Lead Compounds which are known to the State of California to cause cancer and birth defects or other reproductive harm. For more information go to www.P65Warnings.ca.gov

Theoretical Push Forces for Cylinders

Table A

Cylinder Bore Ø	Piston Area (In.²)	Cylinder Push Stroke Force in Pounds at Various Pressures (psi)						
		100	250	500	1000	1500	2000	3000
2.00	3.14	314	785	1570	3140	4712	6280	9420
2.50	4.91	491	1228	2455	4910	7363	9820	14730
3.25	8.30	830	2075	4150	8300	12444	16600	24900
4.00	12.57	1257	3143	6285	12570	18850	25140	37710
5.00	19.64	1964	4910	9820	19640	29453	39280	58920
6.00	28.27	2827	7068	14135	28270	42412	56540	84810
7.00	38.49	3849	9623	19245	38490	57727	76980	115470
8.00	50.27	5027	12568	25135	50270	75398	100540	150810

General Formula

The cylinder output forces are derived from the formula:

$$F = P \times A$$

Where F = Force in pounds.
P = Pressure at the cylinder in pounds per square inch, gauge.
A = Effective area of cylinder piston in square inches.

Theoretical Pull Forces for Cylinders

Table B

Bore Ø	Piston Rod Ø	Piston Rod Area (In.²)	Cylinder Pull Force in Pounds at Various Pressures (psi)						
			100	250	500	1000	1500	2000	3000
2.00	1.000	0.785	236	589	1178	2355	3533	4710	7065
	1.375	1.48	166	414	828	1655	2483	3310	4965
2.50	1.000	0.785	413	1031	2063	4125	6188	8250	12375
	1.375	1.48	343	856	1713	3425	5138	6850	10275
	1.750	2.41	250	625	1250	2500	3750	5000	7500
3.25	1.375	1.48	682	1704	3408	6815	10223	13630	20445
	1.750	2.41	589	1473	2945	5890	8835	11780	17670
	2.000	3.14	516	1290	2580	5160	7740	10320	15480
4.00	1.750	2.41	1016	2540	5080	10160	15240	20320	30480
	2.000	3.14	943	2358	4715	9430	14145	18860	28290
	2.500	4.91	766	1915	3830	7660	11490	15320	22980
5.00	2.000	3.14	1650	4125	8250	16500	24750	33000	49500
	2.500	4.91	1473	3683	7365	14730	22095	29460	44190
	3.000	7.07	1257	3143	6285	12570	18855	25140	37710
	3.500	9.62	1002	2505	5010	10020	15030	20040	30060
6.00	2.500	4.91	2336	5840	11680	23360	35040	46720	70080
	3.000	7.07	2120	5300	10600	21200	31800	42400	63600
	3.500	9.62	1865	4663	9325	18650	27975	37300	55950
	4.000	12.57	1570	3925	7850	15700	23550	31400	47100
7.00	3.000	7.07	3142	7855	15710	31420	47130	62840	94260
	3.500	9.62	2887	7218	14435	28870	43305	57740	86610
	4.000	12.57	2592	6480	12960	25920	38880	51840	77760
	4.500	15.90	2259	5648	11295	22590	33885	45180	67770
	5.000	19.63	1886	4715	9430	18860	28290	37720	56580
8.00	3.500	9.62	4065	10163	20325	40650	60975	81300	121950
	4.000	12.57	3770	9425	18850	37700	56550	75400	113100
	4.500	15.90	3437	8593	17185	34370	51555	68740	103110
	5.000	19.63	3064	7660	15320	30640	45960	61280	91920
	5.500	23.76	2651	6628	13255	26510	39765	53020	79530

⚠ **PROP 65 WARNING** **WARNING:** This product can expose you to chemicals including Lead and Lead Compounds which are known to the State of California to cause cancer and birth defects or other reproductive harm. For more information go to www.P65Warnings.ca.gov

Cylinder Push Speed Requirements - Table C

Cylinder Bore	Piston Area (In^2)	Cylinder Push Speed (inch/second)										
		Pump Size at Max RPM										
		G02	G03	G04	G05	G06	G07	G08	G09	G10	G11	G12
2.00	3.14	1.35	3.19	4.29	5.64	6.00	6.37	6.62	7.23	7.72	7.23	7.84
2.50	4.91	0.86	2.04	2.75	3.61	3.84	4.08	4.24	4.63	4.94	4.63	5.02
3.25	8.30	0.51	1.21	1.62	2.13	2.27	2.41	2.51	2.74	2.92	2.74	2.97
4.00	12.57	0.34	0.80	1.07	1.41	1.50	1.59	1.65	1.81	1.93	1.81	1.96
5.00	19.63	0.22	0.51	0.69	0.90	0.96	1.02	1.06	1.16	1.24	1.16	1.25
6.00	28.27	0.15	0.35	0.48	0.63	0.67	0.71	0.74	0.80	0.86	0.80	0.87
7.00	38.48	0.11	0.26	0.35	0.46	0.49	0.52	0.54	0.59	0.63	0.59	0.64
8.00	50.27	0.08	0.20	0.27	0.35	0.38	0.40	0.41	0.45	0.48	0.45	0.49

General Formula Velocity= (231 x Flow rate (GPM))/(12x60xNet Area (square inches))

Where Velocity (V) = Speed in Inch/sec
Flow Rate (GPM) = Gallons/minute
Net Area = Square-Inch

Cylinder Pull Speed Requirements - Table D

Cylinder Bore	Piston Rod Dia	Piston Rod Area (In^2)	Cylinder Push Speed (inch/second)										
			Pump Size at Max RPM										
			G02	G03	G04	G05	G06	G07	G08	G09	G10	G11	G12
2.00	1.00	2.36	1.80	4.25	5.72	7.52	8.01	8.50	8.82	9.64	10.29	9.64	10.46
	1.38	1.66	2.56	6.04	8.13	10.69	11.39	12.08	12.55	13.71	14.64	13.71	14.87
2.50	1.00	4.12	1.03	2.43	3.27	4.30	4.58	4.86	5.04	5.51	5.88	5.51	5.98
	1.38	3.42	1.24	2.92	3.94	5.17	5.51	5.85	6.07	6.63	7.08	6.63	7.20
	1.75	2.50	1.69	4.00	5.38	7.07	7.54	8.00	8.30	9.07	9.69	9.07	9.84
3.25	1.38	6.81	0.62	1.47	1.98	2.60	2.77	2.94	3.05	3.34	3.56	3.34	3.62
	1.75	5.89	0.72	1.70	2.29	3.01	3.20	3.40	3.53	3.86	4.12	3.86	4.18
	2.00	5.15	0.82	1.94	2.61	3.44	3.66	3.88	4.03	4.41	4.71	4.41	4.78
4.00	1.75	10.16	0.42	0.99	1.33	1.74	1.86	1.97	2.05	2.24	2.39	2.24	2.42
	2.00	9.42	0.45	1.06	1.43	1.88	2.00	2.12	2.21	2.41	2.57	2.41	2.61
	2.50	7.66	0.55	1.31	1.76	2.31	2.46	2.61	2.71	2.97	3.17	2.97	3.22
5.00	2.00	16.49	0.26	0.61	0.82	1.07	1.14	1.21	1.26	1.38	1.47	1.38	1.49
	2.50	14.73	0.29	0.68	0.92	1.20	1.28	1.36	1.41	1.54	1.65	1.54	1.67
	3.00	12.57	0.35	0.80	1.07	1.41	1.50	1.59	1.6	1.81	1.93	1.81	1.96
	3.50	10.01	0.42	1.00	135	1.77	1.88	2.00	2.08	2.27	2.42	2.27	2.46
6.00	2.50	23.37	0.18	0.43	0.58	0.76	0.81	0.86	0.89	0.97	1.04	0.9	1.05
	3.00	21.21	0.20	0.47	0.64	0.84	0.89	0.94	0.98	1.07	1.14	1.07	1.16
	3.50	18.65	0.23	0.54	0.72	0.95	1.01	1.07	1.11	1.22	1.30	1.22	1.32
	4.00	15.71	0.27	0.64	0.86	1.13	1.20	1.27	1.32	1.45	1.54	1.45	1.57
7.00	3.00	31.42	0.13	0.32	0.43	0.56	0.60	0.64	0.66	0.72	0.77	0.72	0.78
	3.50	28.86	0.15	0.35	0.47	0.61	0.65	0.69	0.72	0.79	0.84	0.79	0.85
	4.00	25.92	0.16	0.39	0.52	0.68	0.73	0.77	0.80	0.88	0.94	0.88	0.95
	4.50	22.58	0.19	0.44	0.60	0.78	0.84	0.89	0.92	1.01	1.07	1.01	1.09
	5.00	18.85	0.22	0.53	0.71	0.94	1.00	1.06	1.10	1.21	1.29	1.21	1.31
8.00	3.50	40.64	0.10	0.25	0.33	0.44	0.46	0.49	0.51	0.56	0.60	0.56	0.61
	4.00	37.70	0.11	0.27	0.36	0.47	0.50	0.53	0.55	0.60	0.64	0.60	0.65
	4.50	34.36	0.12	0.29	0.39	0.52	0.55	0.58	0.61	0.66	0.71	0.66	0.72
	5.00	30.63	0.14	0.33	0.44	0.58	0.62	0.65	0.68	0.74	0.79	0.74	0.80
	5.50	26.51	0.16	0.38	0.51	0.67	0.71	0.76	0.78	0.86	0.92	0.86	0.93

How to select your Hybrid Actuator continued

Hybrid Actuators are Power on Demand devices, by nature will have some dwell or idle time. This will allow us to optimize the motor, providing the smallest possible configuration. It's important to understand the proper dwell time for this to be effective. Optimization is achieved by calculating the RMS pressure requirements for the application.

When sizing an HAS actuator, two pressure values must be considered. Max PSI and Root Mean Squared (RMS) PSI. Max Pressure, is just that, the maximum pressure needed by the HAS cylinder. Maximum pressure is the value determined in steps 1 and 2 of the selection process.

RMS pressure is square root of the mean of all the squares in a cycle, the average pressure requirement of your cycle. The RMS force values consider not only the PSI, but the duration of that PSI by segment. Each work segment generates motor heating, while dwell segments allow for cooling. Defining each segment, allows us to calculate an equivalent steady state "continuous" rating.

The next steps walk us through the process of determining application RMS requirements.

Determine RMS Pressure

Step 5. Plot out the Force over Time requirements of your application. Include both the Push and Pull requirements. See Fig a.

Step 6. Use the Formula in Fig. b, to calculate the Pressure_{RMS} value.

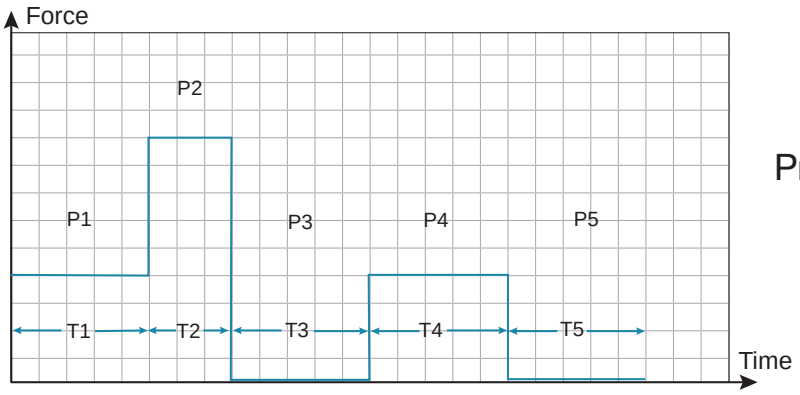

Fig. a

$$P_{RMS} \sqrt{\frac{(P_1^2 t_1) + (P_2^2 t_2) + (P_3^2 t_3) \ldots + (P_{n2} t_n)}{(t_1 + t_2 + t_3 + \ldots t_n)}}$$

Fig. b

Where

P_{RMS}	= Continuous Pressure Rating reference point
P1	= Pressure For Segment 1
t1	= Time duration for segment 1
P2	= Pressure For Segment 2
t2	= Time duration for segment 2

Determine Pump and Motor selection

Step 7. Using the Flow, Peak Pressure, and RMS Pressure from previous steps, find the Pressure-Flow curve, where Peak Pressure is below the Solid line, the RMS Pressure is below the dashed line, meeting the flow Requirement. The Chart heading indicates Motor Size, and Color of Line dictates Pump Size. Select the Motor based upon desired voltage supply.

Determine Drive Kit Size

Step 8. Using the Pump and Motor Codes, based upon peak pressures, the required current is listed on table E starting on page 58. The current values listed can be used in selecting the appropriate drive kit from Page 8. If Peak Pressure duration is less than 6 seconds, Drive Peak Amp rating may be used. If longer than 6 seconds, utilize constant value listed.

⚠ **PROP 65 WARNING** **WARNING:** This product can expose you to chemicals including Lead and Lead Compounds which are known to the State of California to cause cancer and birth defects or other reproductive harm. For more information go to www.P65Warnings.ca.gov

How to use Pressure - Flow Curves

Determine the pressure requirement for the complete cycle, allow for the smallest most efficient means of control for your Hybrid Actuator. Below is an example on how to use the Pressure-Flow curves.

Example:

From Table A and B, it was determined that a 2-1/2" bore would require 2000 PSI to generate 8,000 lbs of thrust, in the Push, (extend) direction. It's a pressing function and only needed at the end of stroke. During Pull we need 1500 lbs to break the part free, and from Table B, utilizing either a 1" or 1-3/8" rod will meet the requirement. Desired Push Velocity is, 2" /sec. From tables, C we require 3 GPM. With a 1" Rod, in Pull, (retract) a 3 GPM requirement will provide 2.8"/sec velocity, more than required, so a Pull Port Bleed orifice is acceptable. There is a 20 sec dwell before cycle repeat.

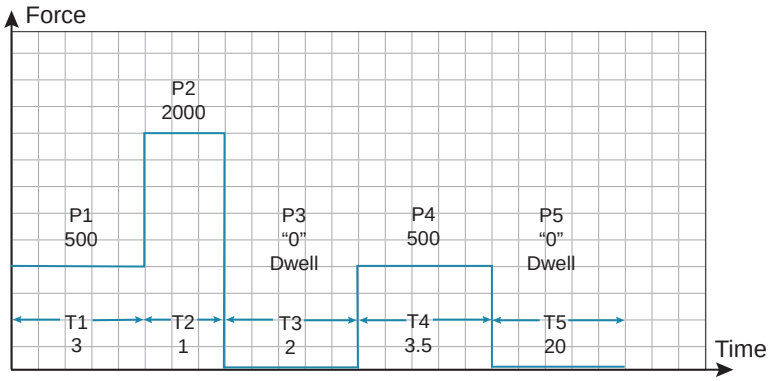

	Segment	Pressure PSI	Time (sec)
Push	1	500	3
	2	2000	1
Dwell	3		2
Pull	4	500	3.5
Dwell	5		20

Consult factory for spreadsheet sizing tool

Simple entry returns all pertinent info

Pressure RMS (Prms)	436.6	PSI
Peak Pressure	2000	PSI
Duty Cycle	25%	
Cycle Time	29.5	Sec
Peak Load Time	2	Sec

$$P_{RMS} = \sqrt{\frac{(500^2 \times 3) + (2000^2 \times 3) + (500^2 \times 3.5)}{(3 + 1 + 2 + 3.5 + 20)}}$$

Graph A Motor A10D

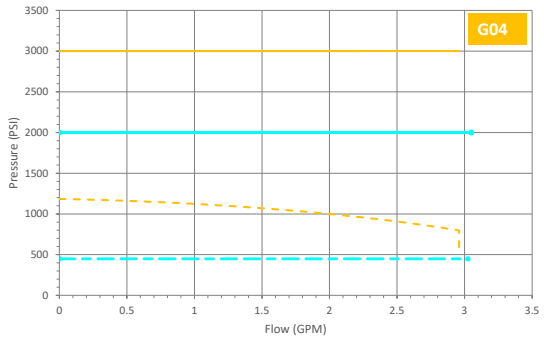

Graph B Motor A10D

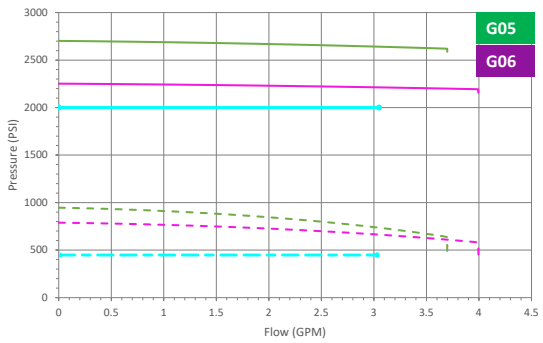

Understanding sizing charts

2000 PSI Peak illustrated with the cyan lines:

G04 pump flow doesn't meet the requirements as shown in graph.

Either the G05 or G06 would meet the flow requirement, graph B. The G06 would provide some additional speed capacitance, however the G05 would allow for higher pressures, and would allow for a slightly faster duty cycle.

From Table E: A10D motor at 2000 PSI will draw, 11 amps, since our duration is less than 6 seconds, we can use the peak sizing column

0991760221-****A10DA drive kit with 16 amps should be selected. 0991760211-****A10D with a peak of 11 amps, is marginal and should not be selected.

E Sizing

⚠ **PROP 65 WARNING** **WARNING:** This product can expose you to chemicals including Lead and Lead Compounds which are known to the State of California to cause cancer and birth defects or other reproductive harm. For more information go to www.P65Warnings.ca.gov

480 VAC

---- Dashed lines are Continuous Pressures
—— Solid lines are Peak Pressures

Motor A09F

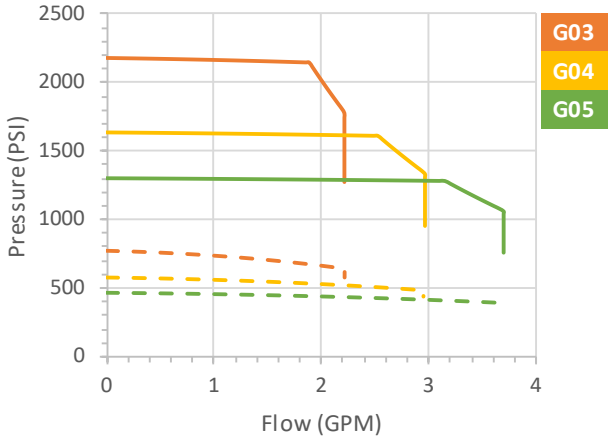

Motor A10B

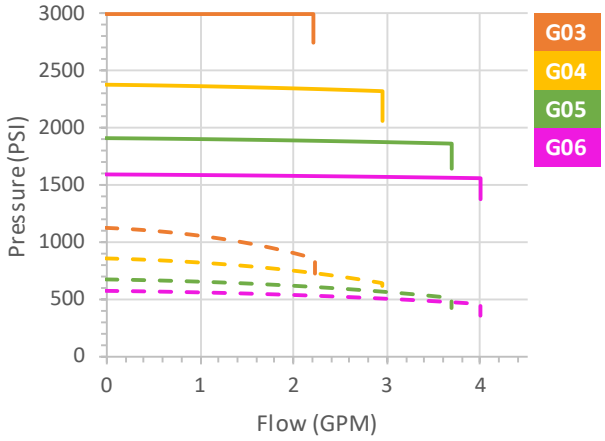

Motor A10D

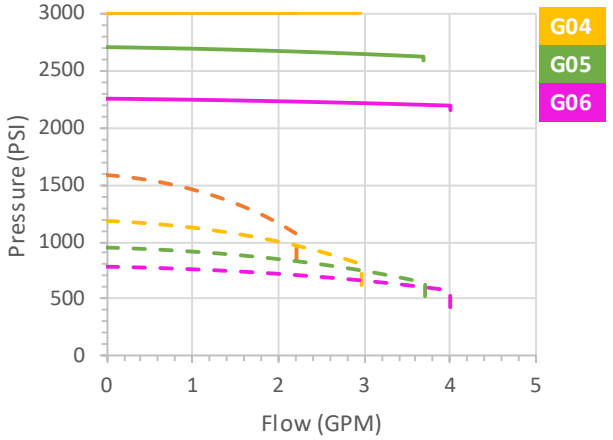

Motor A11B

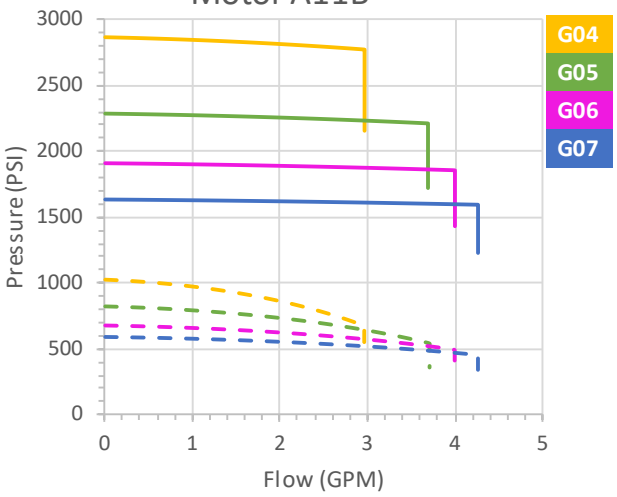

Motor A11D

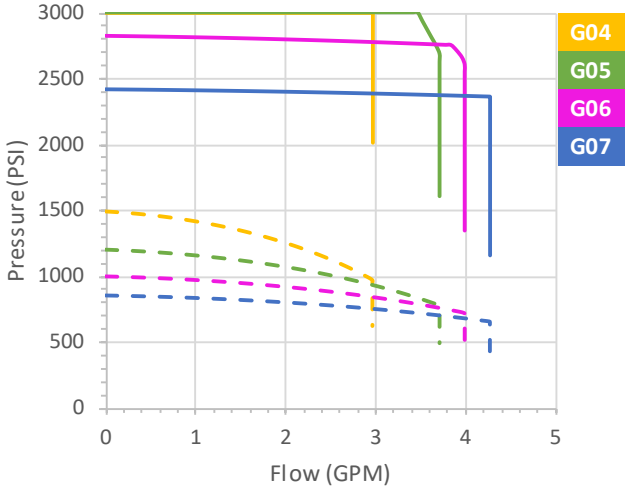

Motor A11F

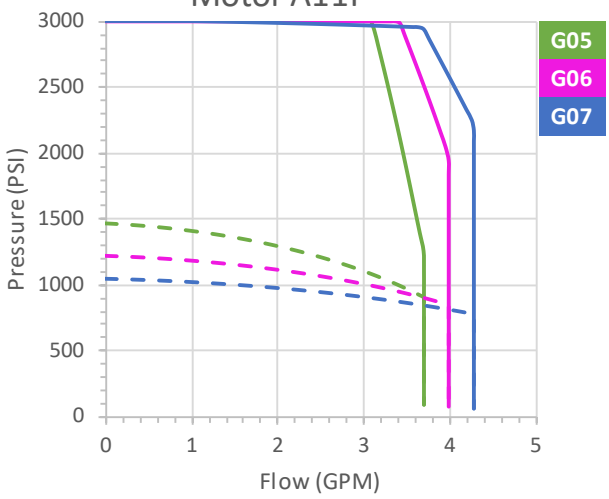

These specifications are based on theoretical motor performance with ambient temperature of 95˚F and are not specific to any amplifier. For applications with move time greater than 6 seconds, temperatures above 95˚F or motors not listed, please consult factory for sizing.

⚠ PROP 65 WARNING **WARNING:** This product can expose you to chemicals including Lead and Lead Compounds which are known to the State of California to cause cancer and birth defects or other reproductive harm. For more information go to www.P65Warnings.ca.gov

480 VAC

---- Dashed lines are Continuous Pressures
—— Solid lines are Peak Pressures

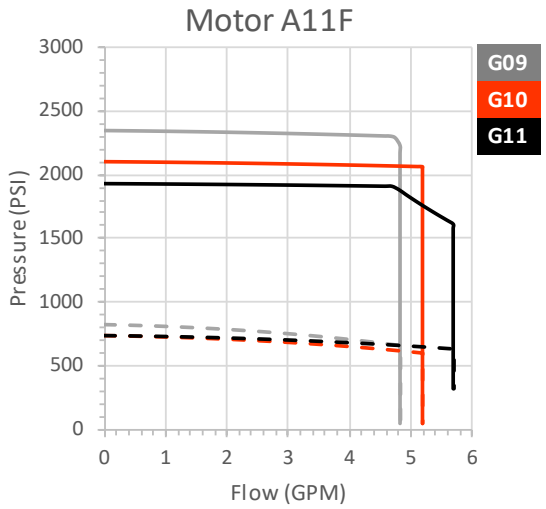

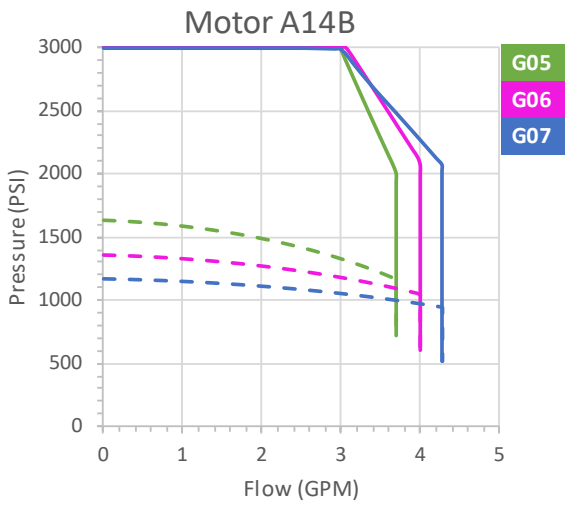

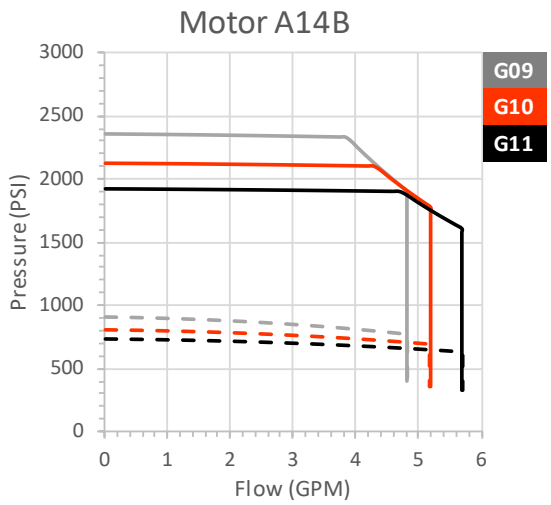

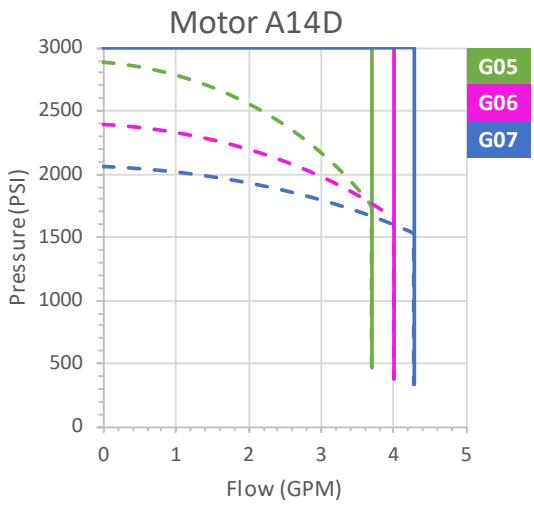

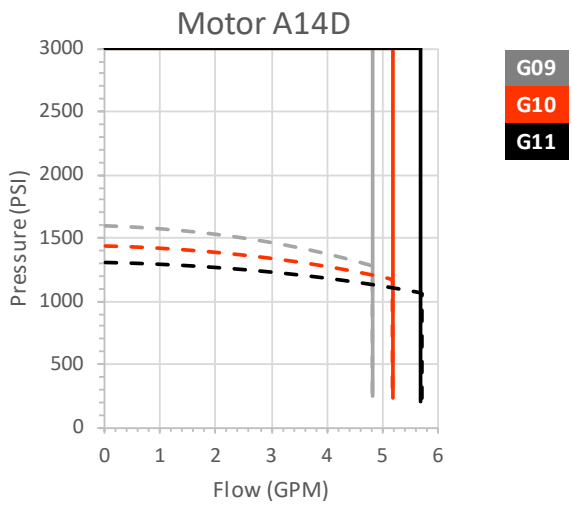

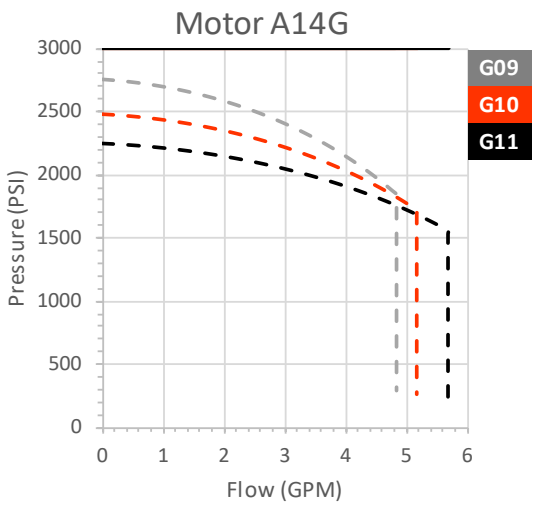

These specifications are based on theoretical motor performance with ambient temperature of 95°F and are not specific to any amplifier.
For applications with move time greater than 6 seconds, temperatures above 95°F or motors not listed, please consult factory for sizing.

⚠ PROP 65 WARNING **WARNING:** This product can expose you to chemicals including Lead and Lead Compounds which are known to the State of California to cause cancer and birth defects or other reproductive harm. For more information go to www.P65Warnings.ca.gov

230 VAC

---- Dashed lines are Continuous Pressures
—— Solid lines are Peak Pressures

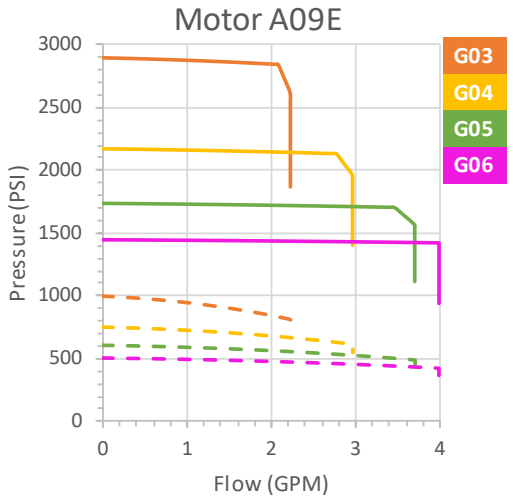

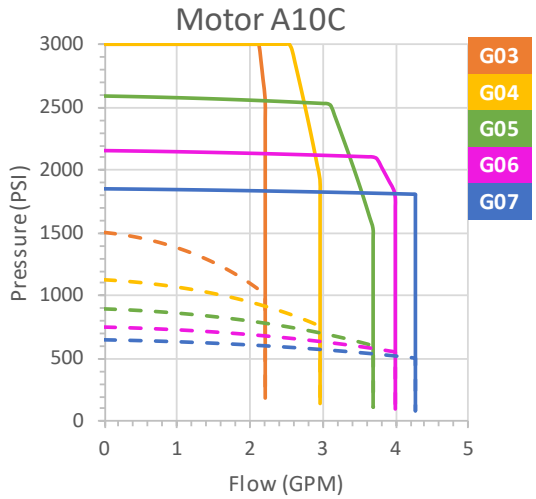

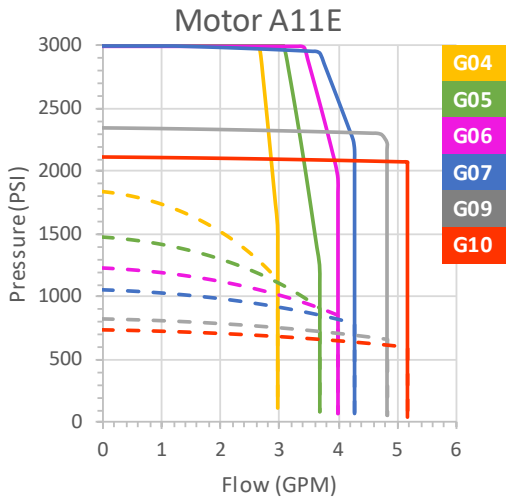

24 VDC

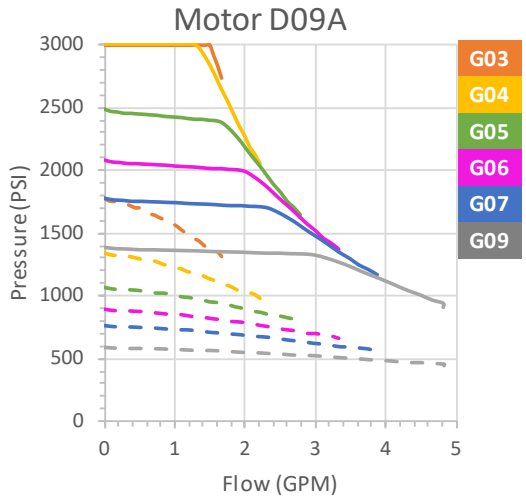

24 VDC

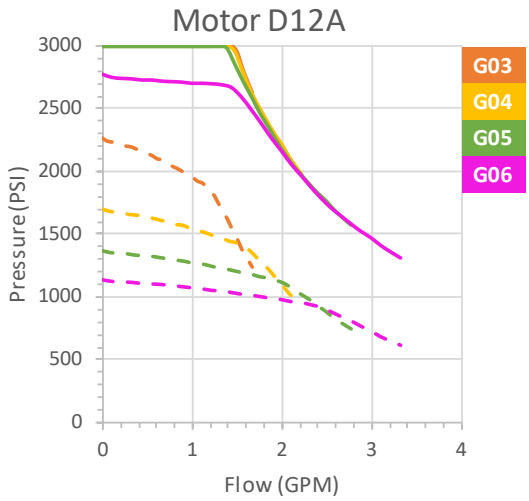

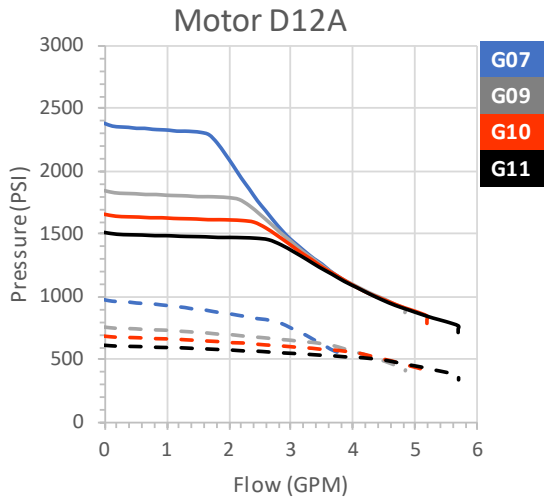

These specifications are based on theoretical motor performance with ambient temperature of 95˚F and are not specific to any amplifier. For applications with move time greater than 6 seconds, temperatures above 95˚F or motors not listed, please consult factory for sizing.

⚠ PROP 65 WARNING **WARNING:** This product can expose you to chemicals including Lead and Lead Compounds which are known to the State of California to cause cancer and birth defects or other reproductive harm. For more information go to www.P65Warnings.ca.gov

Theoretical Amp requirement for Drive/ Inverter

Table E

Motor	Pres-sure	Kt	Amp Requirement								
			Pump Size								
			G03	G04	G05	G06	G07	G08	G09	G10	G11
480 VAC Models											
A09F	500	1.123	1.72	2.30	2.87	3.45	4.02	4.60	5.17	5.75	6.32
	1000	1.123	3.45	4.60	5.75	6.90	8.05	9.20	10.35	11.50	12.65
	2000	1.123	6.90	9.20	11.50	13.80	16.10	18.39	20.69	22.99	25.29
	3000	1.123	10.35	13.80	17.25	20.69	24.14	27.59	31.04	34.49	37.94
A10B	500	1.170	1.66	2.21	2.76	3.31	3.86	4.41	4.97	5.52	6.07
	1000	1.170	3.31	4.41	5.52	6.62	7.72	8.83	9.93	11.03	12.14
	2000	1.170	6.62	8.83	11.03	13.24	15.45	17.66	19.86	22.07	24.28
	3000	1.170	9.93	13.24	16.55	19.86	23.17	26.48	29.79	33.10	36.42
A10D	500	1.174	1.65	2.20	2.75	3.30	3.85	4.40	4.95	5.50	6.05
	1000	1.174	3.30	4.40	5.50	6.60	7.70	8.80	9.90	11.00	12.10
	2000	1.174	6.60	8.80	11.00	13.20	15.40	17.60	19.80	21.99	24.19
	3000	1.174	9.90	13.20	16.50	19.80	23.09	26.39	29.69	32.99	36.29
A11B	500	1.119	1.73	2.31	2.88	3.46	4.04	4.62	5.19	5.77	6.35
	1000	1.119	3.46	4.62	5.77	6.92	8.08	9.23	10.38	11.54	12.69
	2000	1.119	6.92	9.23	11.54	13.85	16.15	18.46	20.77	23.08	25.38
	3000	1.119	10.38	13.85	17.31	20.77	24.23	27.69	31.15	34.61	38.08
A11D	500	1.338	1.45	1.93	2.41	2.89	3.38	3.86	4.34	4.82	5.31
	1000	1.338	2.89	3.86	4.82	5.79	6.75	7.72	8.68	9.65	10.61
	2000	1.338	5.79	7.72	9.65	11.58	13.51	15.44	17.37	19.30	21.23
	3000	1.338	8.68	11.58	14.47	17.37	20.26	23.16	26.05	28.95	31.84
A11F	500	1.848	1.05	1.40	1.75	2.10	2.45	2.79	3.14	3.49	3.84
	1000	1.848	2.10	2.79	3.49	4.19	4.89	5.59	6.29	6.99	7.69
	2000	1.848	4.19	5.59	6.99	8.38	9.78	11.18	12.58	13.97	15.37
	3000	1.848	6.29	8.38	10.48	12.58	14.67	16.77	18.86	20.96	23.06
A14B	500	1.521	1.27	1.70	2.12	2.55	2.97	3.40	3.82	4.24	4.67
	1000	1.521	2.55	3.40	4.24	5.09	5.94	6.79	7.64	8.49	9.34
	2000	1.521	5.09	6.79	8.49	10.19	11.88	13.58	15.28	16.98	18.67
	3000	1.521	7.64	10.19	12.73	15.28	17.83	20.37	22.92	25.47	28.01
A14D	500	1.610	1.20	1.60	2.00	2.41	2.81	3.21	3.61	4.01	4.41
	1000	1.610	2.41	3.21	4.01	4.81	5.61	6.42	7.22	8.02	8.82
	2000	1.610	4.81	6.42	8.02	9.62	11.23	12.83	14.43	16.04	17.64
	3000	1.610	7.22	9.62	12.03	14.43	16.84	19.25	21.65	24.06	26.46
A14G	500	1.591	1.22	1.62	2.03	2.43	2.84	3.25	3.65	4.06	4.46
	1000	1.591	2.43	3.25	4.06	4.87	5.68	6.49	7.30	8.11	8.93
	2000	1.591	4.87	6.49	8.11	9.74	11.36	12.98	14.61	16.23	17.85
	3000	1.591	7.30	9.74	12.17	14.61	17.04	19.48	21.91	24.34	26.78

⚠ **PROP 65 WARNING** **WARNING:** This product can expose you to chemicals including Lead and Lead Compounds which are known to the State of California to cause cancer and birth defects or other reproductive harm. For more information go to www.P65Warnings.ca.gov

Theoretical Amp requirement for Drive/ Inverter

Table E

Motor	Pressure	Kt	Amp Requirement								
			Pump Size								
			G03	G04	G05	G06	G07	G08	G09	G10	G11
230 VAC Models											
A09E	500	0.561	3.45	4.60	5.75	6.90	8.05	9.21	10.36	11.51	12.66
	1000	0.561	6.90	9.21	11.51	13.81	16.11	18.41	20.71	23.01	25.32
	2000	0.561	13.81	18.41	23.01	27.62	32.22	36.82	41.43	46.03	50.63
	3000	0.561	20.71	27.62	34.52	41.43	48.33	55.23	62.14	69.04	75.95
A10C	500	0.842	2.30	3.07	3.83	4.60	5.37	6.13	6.90	7.67	8.43
	1000	0.842	4.60	6.13	7.67	9.20	10.73	12.27	13.80	15.33	16.87
	2000	0.842	9.20	12.27	15.33	18.40	21.47	24.53	27.60	30.67	33.73
	3000	0.842	13.80	18.40	23.00	27.60	32.20	36.80	41.40	46.00	50.60
A11E	500	0.924	2.10	2.79	3.49	4.19	4.89	5.59	6.29	6.99	7.69
	1000	0.924	4.19	5.59	6.99	8.38	9.78	11.18	12.58	13.97	15.37
	2000	0.924	8.38	11.18	13.97	16.77	19.56	22.36	25.15	27.95	30.74
	3000	0.924	12.58	16.77	20.96	25.15	29.34	33.53	37.73	41.92	46.11
24V DC Models											
D09A	500	0.091	21.28	28.38	35.47	42.56	49.66	56.75	63.85	70.94	78.03
	1000	0.091	42.56	56.75	70.94	85.13	99.31	113.50	127.69	141.88	156.07
	2000	0.091	85.13	113.50	141.88	170.25	198.63	227.00	255.38	283.76	312.13
	3000	0.091	127.69	170.25	212.82	255.38	297.94	340.51	383.07	425.63	468.20
D12A	500	0.120	16.14	21.52	26.90	32.28	37.66	43.04	48.42	53.80	59.17
	1000	0.120	32.28	43.04	53.80	64.55	75.31	86.07	96.83	107.59	118.35
	2000	0.120	64.55	86.07	107.59	129.11	150.63	172.15	193.66	215.18	236.70
	3000	0.120	96.83	129.11	161.39	193.66	225.94	258.22	290.50	322.77	355.05
36V DC Models											
D09B	500	0.136	14.24	18.99	23.73	28.48	33.23	37.97	42.72	47.47	52.21
	1000	0.136	28.48	37.97	47.47	56.96	66.45	75.95	85.44	94.93	104.43
	2000	0.136	56.96	75.95	94.93	113.92	132.91	151.89	170.88	189.87	208.85
	3000	0.136	85.44	113.92	142.40	170.88	199.36	227.84	256.32	284.80	313.28
D12B	500	0.137	14.14	18.85	23.56	28.27	32.98	37.70	42.41	47.12	51.83
	1000	0.137	28.27	37.70	47.12	56.54	65.97	75.39	84.82	94.24	103.66
	2000	0.137	56.54	75.39	94.24	113.09	131.94	150.78	169.63	188.48	207.33
	3000	0.137	84.82	113.09	141.36	169.63	197.90	226.18	254.45	282.72	310.99
48V DC Models											
D09C	500	0.173	11.19	14.93	18.66	22.39	26.12	29.85	33.58	37.31	41.05
	1000	0.173	22.39	29.85	37.31	44.78	52.24	59.70	67.17	74.63	82.09
	2000	0.173	44.78	59.70	74.63	89.56	104.48	119.41	134.33	149.26	164.18
	3000	0.173	67.17	89.56	111.94	134.33	156.72	179.11	201.50	223.89	246.28
D12C	500	0.149	13.00	17.33	21.66	26.00	30.33	34.66	38.99	43.33	47.66
	1000	0.149	26.00	34.66	43.33	51.99	60.66	69.32	77.99	86.65	95.32
	2000	0.149	51.99	69.32	86.65	103.98	121.31	138.64	155.97	173.30	190.63
	3000	0.149	77.99	103.98	129.98	155.97	181.97	207.96	233.96	259.95	285.95

⚠ **PROP 65 WARNING** **WARNING:** This product can expose you to chemicals including Lead and Lead Compounds which are known to the State of California to cause cancer and birth defects or other reproductive harm. For more information go to www.P65Warnings.ca.gov

Series Applications Worksheet

Series HAS 500

Please provide as much information as possible.

Completed form can be returned via email to cylproductinfo@parker.com or faxed to (800) 892-1008.

Customer Information

Company Name: _____

Contact: _____

Phone: _____ **Fax:** _____

E-Mail: _____

Address: _____

_____

Cylinder Information

Quantity: _____

Move Distance: _____ in. _____ mm
or
Overall Stroke: _____ in. _____ mm

Rod End: Male Female English Other: _____
Rod Eye Metric

Mounting
Primary: _____

Rod Orientation: Horizontal Up Down

Application Information

Push Force Required: _____ lbs

Pull Force Required: _____ lbs

Load Weight: _____ lbs

Speed: Push Pull

Maximum: _____ in./sec. _____ in./sec.

Minimum: _____ in./sec. _____ in./sec.

Move Time: _____ seconds _____ seconds

Dwell Time between: _____ seconds _____ seconds

Environmental: _____ Ambient Temp

_____ Humidity / other considerations

Motor Voltage: 230 VAC 460 VAC Other _____

Brushed / Brushless: 24 VDC 36 VDC 48 VDC IQAN Connect

Force

Angle: _____ Degrees

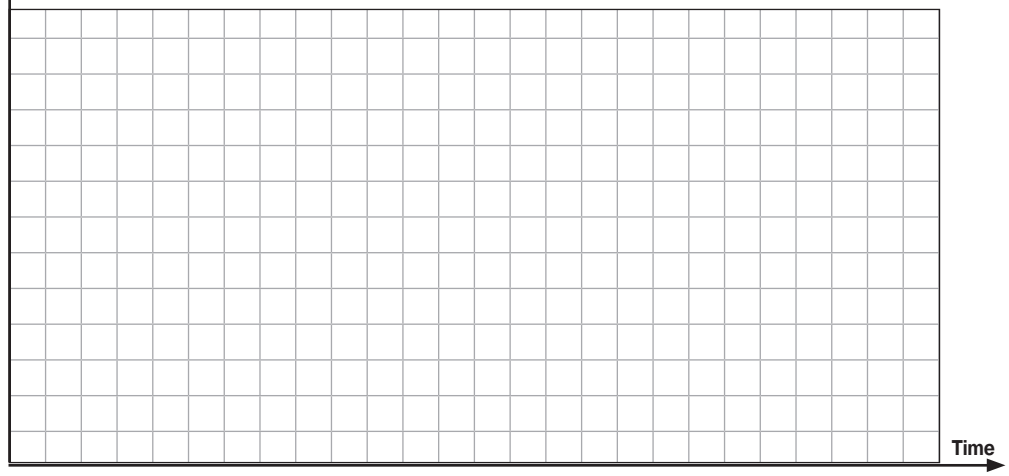

Time	Move Distance	Force

Distance

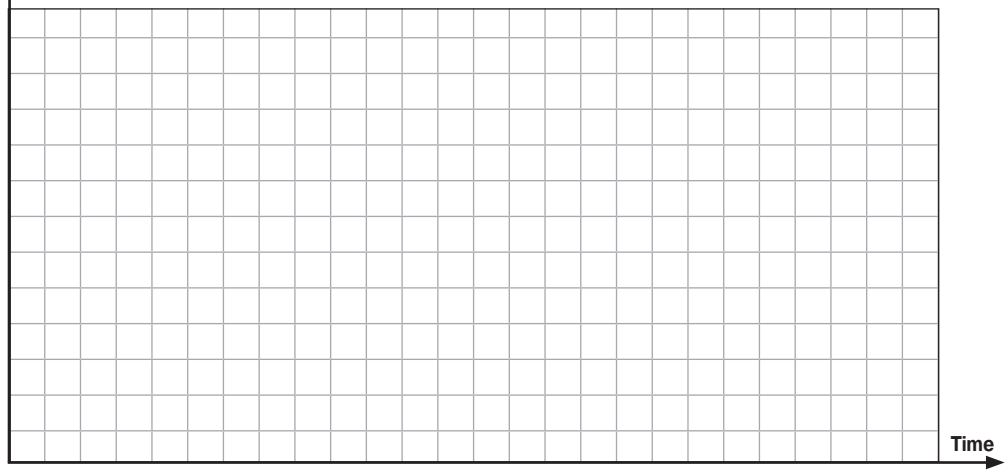

Time	Move Distance	Speed
	Push Dwell	
	Cycle Dwell	

Safety Guide for Selecting and Using Hydraulic, Pneumatic Cylinders and Their Accessories

WARNING: ⚠ FAILURE OF THE CYLINDER, ITS PARTS, ITS MOUNTING, ITS CONNECTIONS TO OTHER OBJECTS, OR ITS CONTROLS CAN RESULT IN:

- **Unanticipated or uncontrolled movement of the cylinder or objects connected to it.**
- **Falling of the cylinder or objects held up by it.**
- **Fluid escaping from the cylinder, potentially at high velocity.**

THESE EVENTS COULD CAUSE DEATH OR PERSONAL INJURY BY, FOR EXAMPLE, PERSONS FALLING FROM HIGH LOCATIONS, BEING CRUSHED OR STRUCK BY HEAVY OR FAST MOVING OBJECTS, BEING PUSHED INTO DANGEROUS EQUIPMENT OR SITUATIONS, OR SLIPPING ON ESCAPED FLUID.

Before selecting or using Parker Hannifin Corporation (the Company) cylinders or related accessories, it is important that you read, understand and follow the following safety information. Training is advised before selecting and using the Company's products.

1.0 General Instructions

1.1 Scope – This safety guide provides instructions for selecting and using (including assembling, installing, and maintaining) cylinder products. This safety guide is a supplement to and is to be used with the specific Company publications for the specific cylinder products that are being considered for use.

1.2 Fail Safe – Cylinder products can and do fail without warning for many reasons. All systems and equipment should be designed in a fail-safe mode so that if the failure of a cylinder product occurs people and property won't be endangered.

1.3 Distribution – Provide a free copy of this safety guide to each person responsible for selecting or using cylinder products. Do not select or use the Company's cylinders without thoroughly reading and understanding this safety guide as well as the specific Company publications for the products considered or selected.

1.4 User Responsibility – Due to very wide variety of cylinder applications and cylinder operating conditions, the Company does not warrant that any particular cylinder is suitable for any specific application. This safety guide does not analyze all technical parameters that must be considered in selecting a product. The hydraulic and pneumatic cylinders outlined in this catalog are designed to the Company's design guidelines and do not necessarily meet the design guideline of other agencies such as American Bureau of Shipping, ASME Pressure Vessel Code etc. The user, through its own
analysis and testing, is solely responsible for:

- Making the final selection of the cylinders and related accessories.
- Determining if the cylinders are required to meet specific design requirements as required by the Agency(s) or industry standards covering the design of the user's equipment.
- Assuring that the user's requirements are met, OSHA requirements are met, and safety guidelines from the applicable agencies such as but not limited to ANSI are followed and that the use presents no health or safety hazards.
- Providing all appropriate health and safety warnings on the equipment on which the cylinders are used.

1.5 Additional Questions – Call the appropriate Company technical service department if you have any questions or require any additional information. See the Company publication for the product being considered or used, or call 1-847-298-2400, or go to www.parker.com, for telephone numbers of the appropriate technical service department.

2.0 Cylinder and Accessories Selection

2.1 Seals – Part of the process of selecting a cylinder is the selection of seal compounds. Before making this selection, consult the "seal information page(s)" of the publication for the series of cylinders of interest.

The application of cylinders may allow fluids such as cutting fluids, wash down fluids etc. to come in contact with the external area of the cylinder. These fluids may attack the piston rod wiper and or the primary seal and must be taken into account when selecting and specifying seal compounds.

Dynamic seals will wear. The rate of wear will depend on many operating factors. Wear can be rapid if a cylinder is mis-aligned or if the cylinder has been improperly serviced. The user must take seal wear into consideration in the application of cylinders.

2.2 Piston Rods – Possible consequences of piston rod failure or separation of the piston rod from the piston include, but are not limited to are:

- Piston rod and or attached load thrown off at high speed.
- High velocity fluid discharge.
- Piston rod extending when pressure is applied in the piston retract mode.

Piston rods or machine members attached to the piston rod may move suddenly and without warning as a consequence of other conditions occurring to the machine such as, but not limited to:

- Unexpected detachment of the machine member from the piston rod.
- Failure of the pressurized fluid delivery system (hoses, fittings, valves, pumps, compressors) which maintain cylinder position.
- Catastrophic cylinder seal failure leading to sudden loss of pressurized fluid.
- Failure of the machine control system.

Follow the recommendations of the "Piston Rod Selection Chart and Data" in the publication for the series of cylinders of interest. The suggested piston rod diameter in these charts must be followed in order to avoid piston rod buckling.

Piston rods are not normally designed to absorb bending moments or loads which are perpendicular to the axis of piston rod motion. These additional loads can cause the piston rod to fail. If these types of additional loads are expected to be imposed on the piston rod, their magnitude should be made known to our engineering department.

The cylinder user should always make sure that the piston rod is securely attached to the machine member.

On occasion cylinders are ordered with double rods (a piston rod extended from both ends of the cylinder). In some cases a stop is threaded on to one of the piston rods and used as an external stroke adjuster. On occasions spacers are attached to the machine member connected to the piston rod and also used as a stroke adjuster. In both cases the stops will create a pinch point and the user should consider appropriate use of guards. If these
external stops are not perpendicular to the mating contact surface, or if debris is trapped between the contact surfaces, a bending moment will be placed on the piston rod, which can lead to piston rod failure. An external stop will also negate the effect of cushioning and will subject the piston rod to impact loading. Those two (2) conditions can cause piston rod failure. Internal stroke adjusters are available with and without cushions. The use of external stroke adjusters should be reviewed with our engineering department.

The piston rod to piston and the stud to piston rod threaded connections are secured with an anaerobic adhesive. The strength of the adhesive decreases with increasing temperature. Cylinders which can be exposed to temperatures above +250°F (+121°C) are to be ordered with a non studded piston rod and a pinned piston to rod joint.

2.3 Cushions – Cushions should be considered for cylinder applications when the piston velocity is expected to be over 4 inches/second.

Cylinder cushions are normally designed to absorb the energy of a linear applied load. A rotating mass has considerably more energy than the same mass moving in a linear mode. Cushioning for a rotating mass application should be reviewed by our engineering department.

2.4 Cylinder Mountings – Some cylinder mounting configurations may have certain limitations such as but not limited to minimum stroke for side or foot mounting cylinders or pressure de-ratings for certain mounts. Carefully review the catalog for these types of restrictions.

Always mount cylinders using the largest possible high tensile alloy steel socket head cap screws that can fit in the cylinder mounting holes and torque them to the manufacturer's recommendations for their size.

2.5 Port Fittings – Hydraulic cylinders applied with meter out or deceleration circuits are subject to intensified pressure at piston rod end.

The rod end pressure is approximately equal to:

$$\frac{\text{operating pressure x effective cap end area}}{\text{effective rod end piston area}}$$

Contact your connector supplier for the pressure rating of individual connectors.

3.0 Cylinder and Accessories Installation and Mounting

3.1 Installation

3.1.1 – Cleanliness is an important consideration, and cylinders are shipped with the ports plugged to protect them from contaminants entering the ports. These plugs should not be removed until the piping is to be installed. Before making the connection to the cylinder ports, piping should be thoroughly cleaned to remove all chips or burrs which might have resulted from threading or flaring operations.

3.1.2 – Cylinders operating in an environment where air drying materials are present such as fast-drying chemicals, paint, or weld splatter, or other hazardous conditions such as excessive heat, should have shields installed to prevent damage to the piston rod and piston rod seals.

3.1.3 – Proper alignment of the cylinder piston rod and its mating component on the machine should be checked in both the extended and retracted positions. Improper alignment will result in excessive rod gland and/or cylinder bore wear. On fixed mounting cylinders attaching the piston rod while the rod is retracted will help in achieving proper alignment.

3.1.4 – Sometimes it may be necessary to rotate the piston rod in order to thread the piston rod into the machine member. This operation must always be done with zero pressure being applied to either side of the piston. Failure to follow this procedure may result in loosening the piston to rod-threaded connection. In some rare cases the turning of the piston rod may rotate a threaded piston rod gland and loosen it from the
cylinder head. Confirm that this condition is not occurring. If it does, re-tighten the piston rod gland firmly against the cylinder head.

For double rod cylinders it is also important that when attaching or detaching the piston rod from the machine member that the torque be applied to the piston rod end of the cylinder that is directly attaching to the machine member with the opposite end unrestrained. If the design of the machine is such that only the rod end of the cylinder opposite to where the rod attaches to the machine member can be rotated, consult the factory for further instructions.

3.2 Mounting Recommendations

3.2.1 – Always mount cylinders using the largest possible high tensile alloy steel socket head screws that can fit in the cylinder mounting holes and torque them to the manufacturer's recommendations for their size.

3.2.2 – Side-Mounted Cylinders – In addition to the mounting bolts, cylinders of this type should be equipped with thrust keys or dowel pins located so as to resist the major load.

3.2.3 – Tie Rod Mounting – Cylinders with tie rod mountings are recommended for applications where mounting space is limited. The standard tie rod extension is shown as BB in dimension tables. Longer or shorter extensions can be supplied. Nuts used for this mounting style should be torqued to the same value as the tie rods for that bore size.

3.2.4 – Flange Mount Cylinders – The controlled diameter of the rod gland extension on head end flange mount cylinders can be used as a pilot to locate the cylinders in relation to the machine. After alignment has been obtained, the flanges may be drilled for pins or dowels to prevent shifting.

3.2.5 – Trunnion Mountings – Cylinders require lubricated bearing blocks with minimum bearing clearances. Bearing blocks should be carefully aligned and rigidly mounted so the trunnions will not be subjected to bending moments. The rod end should also be pivoted with the pivot pin in line and parallel to axis of the trunnion pins.

3.2.6 – Clevis Mountings – Cylinders should be pivoted at both ends with centerline of pins parallel to each other. After cylinder is mounted, be sure to check to assure that the cylinder is free to swing through its working arc without interference from other machine parts.

4.0 Cylinder and Accessories Maintenance, Troubleshooting and Replacement

4.1 Storage – At times cylinders are delivered before a customer is ready to install them and must be stored for a period of time. When storage is required the following procedures are recommended.

4.1.1 – Store the cylinders in an indoor area which has a dry, clean and noncorrosive atmosphere. Take care to protect the cylinder from both internal corrosion and external damage.

4.1.2 – Whenever possible cylinders should be stored in a vertical position (piston rod up). This will minimize corrosion due to possible condensation which could occur inside the cylinder. This will also minimize seal damage.

4.1.3 – Port protector plugs should be left in the cylinder until the time of installation.

4.1.4 – If a cylinder is stored full of hydraulic fluid, expansion of the fluid due to temperature changes must be considered. Installing a check valve with free flow out of the cylinder is one method.

4.1.5 – When cylinders are mounted on equipment that is stored outside for extended periods, exposed unpainted surfaces, e.g. piston rod, must be coated with a rust-inhibiting compound to prevent corrosion.

4.2 Cylinder Trouble Shooting

4.2.1 – **External Leakage**

4.2.1.1 – Rod seal leakage can generally be traced to worn or damaged seals. Examine the piston rod for dents, gouges or score marks, and replace piston rod if surface is rough.

Rod seal leakage could also be traced to gland wear. If clearance is excessive, replace rod bushing and seal. Rod seal leakage can also be traced to seal deterioration. If seals are soft or gummy or brittle, check compatibility of seal material with lubricant used if air cylinder, or operating fluid if hydraulic cylinder. Replace with seal material, which is compatible with these fluids. If the seals are hard or have lost elasticity, it is usually due to exposure to temperatures in excess of 165°F. (+74°C). Shield the cylinder from the heat source to limit temperature to 350°F. (+177°C.) and replace with fluorocarbon seals.

4.2.1.2 – Cylinder body seal leak can generally be traced to loose tie rods. Torque the tie rods to manufacturer's recommendation for that bore size.

Excessive pressure can also result in cylinder body seal leak. Determine maximum pressure to rated limits. Replace seals and retorque tie rods as in paragraph above. Excessive pressure can also result in cylinder body seal leak. Determine if the pressure rating of the cylinder has been exceeded. If so, bring the operating pressure down to the rating of the cylinder and have the tie rods replaced.

Pinched or extruded cylinder body seal will also result in a leak. Replace cylinder body seal and retorque as in paragraph above.

Cylinder body seal leakage due to loss of radial squeeze which shows up in the form of flat spots or due to wear on the O.D. or I.D. – Either of these are symptoms of normal wear due to high cycle rate or length of service. Replace seals as per paragraph above.

4.2.2 – **Internal Leakage**

4.2.2.1 – Piston seal leak (by-pass) 1 to 3 cubic inches per minute leakage is considered normal for piston ring construction. Virtually no static leak with lipseal type seals on piston should be expected. Piston seal wear is a usual cause of piston seal leakage. Replace seals as required.

4.2.2.2 – With lipseal type piston seals excessive back pressure due to over-adjustment of speed control valves could be a direct cause of rapid seal wear. Contamination in a hydraulic system can result in a scored cylinder bore, resulting in rapid seal wear. In either case, replace piston seals as required.

4.2.2.3 – What appears to be piston seal leak, evidenced by the fact that the cylinder drifts, is not always traceable to the piston. To make sure, it is suggested that one side of the cylinder piston be pressurized and the fluid line at the opposite port be disconnected. Observe leakage. If none is evident, seek the cause of cylinder drift in other component parts in the circuit.

4.2.3 – **Cylinder Fails to Move the Load**

4.2.3.1 – Pneumatic or hydraulic pressure is too low. Check the pressure at the cylinder to make sure it is to circuit requirements.

4.2.3.2 – Piston Seal Leak – Operate the valve to cycle the cylinder and observe fluid flow at valve exhaust ports at end of cylinder stroke. Replace piston seals if flow is excessive.

4.2.3.3 – Cylinder is undersized for the load – Replace cylinder with one of a larger bore size.

4.3 Erratic or Chatter Operation

4.3.1 – Excessive friction at rod gland or piston bearing due to load misalignment – Correct cylinder-to-load alignment.

4.3.2 – Cylinder sized too close to load requirements – Reduce load or install larger cylinder.

4.3.3 – Erratic operation could be traced to the difference between static and kinetic friction. Install speed control valves to provide a back pressure to control the stroke.

4.4 Cylinder Modifications, Repairs, or Failed Component – Cylinders as shipped from the factory are not to be disassembled and or modified. If cylinders require modifications, these modifications must be done at company locations or by the Company's certified facilities. The Cylinder Division Engineering Department must be notified in the event of a mechanical fracture or permanent deformation of any cylinder component (excluding seals). This includes a broken piston rod, tie rod, mounting accessory or any other cylinder component. The notification should include all operation and application details. This information will be used to provide an engineered repair that will prevent recurrence of the failure.

It is allowed to disassemble cylinders for the purpose of replacing seals or seal assemblies. However, this work must be done by strictly following all the instructions provided with the seal kits.

The items described in this document and other documents and descriptions provided by Parker Hannifin Corporation, its subsidiaries and its authorized distributors ("Seller") are hereby offered for sale at prices to be established by Seller. This offer and its acceptance by any customer ("Buyer") shall be governed by all of the following Terms and Conditions. Buyer's order for any item described in its document, when communicated to Seller verbally, or in writing, shall constitute acceptance of this offer. All goods, services or work described will be referred to as "Products".

1. Terms. All sales of Products by Seller will be governed by, and are expressly conditioned upon Buyer's assent to, these Terms. These Terms are incorporated into any Quote provided by Seller to Buyer. Buyer's order for any Products whether communicated to Seller verbally, in writing, by electronic data interface or other electronic commerce, shall constitute acceptance of these Terms. Seller objects to any contrary or additional terms or conditions of Buyer. Reference in Seller's order acknowledgement to Buyer's purchase order or purchase order number shall in no way constitute an acceptance of any of Buyer's terms or conditions of purchase. Any Quote made by Seller to Buyer shall be considered a firm and definite offer and shall not be deemed to be otherwise despite any language on the face of the Quote. Seller reserves all rights to accept or reject any purported acceptance by Buyer to Seller's Quote if such purported acceptance attempts to vary the terms of the Quote. If Seller ships Products after Buyer issues an acceptance to the Quote, any additional or different terms proposed by Buyer will not become part of the parties' business relationship unless agreed to in a writing that is signed by an authorized representative of Seller, excluding email correspondence. If the transaction proceeds without such agreement on the part of Seller, the business relationship will be governed solely by these Terms and the specific terms in Seller's Quote.

2. Price; Payment. The Products set forth in the Quote are offered for sale at the prices indicated in the Quote. Unless otherwise specifically stated in the Quote, prices are valid for thirty (30) days and do not include any sales, use, or other taxes or duties. Seller reserves the right to modify prices for any reason and at any time by giving ten (10) days prior written notice. Unless otherwise specified by Seller, all prices are F.C.A. Seller's facility (INCOTERMS 2020). All sales are contingent upon credit approval and full payment for all purchases is due thirty (30) days from the date of invoice (or such date as may be specified in the Quote). Under any circumstances, Buyer may not withhold or suspend payment of any amounts due and payable as a deduction, set-off or recoupment of any amount, claim or dispute with Seller. Unpaid invoices beyond the specified payment date incur interest at the rate of 1.5% per month or the maximum allowable rate under applicable law. Seller reserves the right to require advance payment or provision of securities for first and subsequent deliveries if there is any doubt, in Seller's sole determination, regarding the Buyer's creditworthiness or for other business reasons. If the requested advance payment or securities are not provided to Seller's satisfaction, Seller reserves the right to suspend performance or reject the purchase order, in whole or in part, without prejudice to Seller's other rights or remedies, including the right to full compensation. Seller may revoke or shorten any payment periods previously granted in Seller's sole determination. The rights and remedies herein reserved to Seller are cumulative and in addition to any other or further rights and remedies available at law or in equity. No waiver by Seller of any breach by Buyer of any provision of these terms will constitute a waiver by Seller of any other breach of such provision.

3. Shipment; Delivery; Title and Risk of Loss. All delivery dates are approximate, and Seller is not responsible for damages or additional costs resulting from any delay. All deliveries are subject to our ability to procure materials from our suppliers. Regardless of the manner of shipment, delivery occurs and title and risk of loss or damage pass to Buyer, upon placement of the Products with the carrier at Seller's facility. Unless otherwise agreed prior to shipment and for domestic delivery locations only, Seller will select and arrange, at Buyer's sole expense, the carrier and means of delivery. When Seller selects and arranges the carrier and means of delivery, freight and insurance costs for shipment to the designated delivery location will be prepaid by Seller and added as a separate line item to the invoice. Buyer shall be responsible for any additional shipping charges incurred by Seller due to Buyer's acts or omissions. Buyer shall not return or repackage any Products without the prior written authorization from Seller, and any return shall be at the sole cost and expense of Buyer.

4. Warranty. The warranty for the Products is as follows: (i) Goods are warranted against defects in material or workmanship for a period of eighteen (18) months from the date of delivery or 2,000 hours of use, whichever occurs first; (ii) Services shall be performed in accordance with generally accepted practices and using the degree of care and skill that is ordinarily exercised and customary in the field to which the Services pertain and are warranted for a period of six (6) months from the date of completion of the Services; and (iii) Software is only warranted to perform in accordance with applicable specifications provided by Seller to Buyer for ninety (90) days from the date of delivery or, when downloaded by a Buyer or end-user, from the date of the initial download. All prices are based upon the exclusive limited warranty stated above, and upon the following disclaimer. **EXEMPTION CLAUSE; DISCLAIMER OF WARRANTY, CONDITIONS, REPRESENTATIONS: THIS WARRANTY IS THE SOLE AND ENTIRE WARRANTY, CONDITION, AND REPRESENTATION, PERTAINING TO PRODUCTS. SELLER DISCLAIMS ALL OTHER WARRANTIES, CONDITIONS, AND REPRESENTATIONS, WHETHER STATUTORY, EXPRESS OR IMPLIED, INCLUDING BUT NOT LIMITED TO THOSE RELATING TO DESIGN, NONINFRINGEMENT, MERCHANTABILITY, AND FITNESS FOR A PARTICULAR PURPOSE. SELLER DOES NOT WARRANT THAT THE SOFTWARE IS ERROR-FREE OR FAULT-TOLERANT, OR THAT BUYER'S USE THEREOF WILL BE SECURE OR UNINTERRUPTED, UNLESS OTHERWISE AUTHORIZED IN WRITING BY SELLER, THE SOFTWARE SHALL NOT BE USED IN CONNECTION WITH HAZARDOUS OR HIGH-RISK ACTIVITIES OR ENVIRONMENTS. EXCEPT AS EXPRESSLY STATED HEREIN, ALL PRODUCTS ARE PROVIDED "AS IS".**

5. Claims; Commencement of Actions. Buyer shall promptly inspect all Products upon receipt. No claims for shortages will be allowed unless reported to Seller within ten (10) days of delivery. Buyer shall notify Seller of any alleged breach of warranty within thirty (30) days after the date the non-conformance is or should have been discovered by Buyer. Any claim or action against Seller based upon breach of contract or any other theory, including tort, negligence, or otherwise must be commenced within twelve (12) months from the date of the alleged breach or other alleged event, without regard to the date of discovery.

6. LIMITATION OF LIABILITY. IN THE EVENT OF A BREACH OF WARRANTY, SELLER WILL, AT ITS OPTION, REPAIR OR REPLACE THE NON-CONFORMING PRODUCTS, RE-PERFORM THE SERVICES, OR REFUND THE PURCHASE PRICE PAID WITHIN A REASONABLE PERIOD OF TIME. IN NO EVENT IS SELLER LIABLE FOR ANY SPECIAL, INDIRECT, INCIDENTAL OR CONSEQUENTIAL DAMAGES INCLUDING ANY LOSS OF REVENUE OR PROFITS, WHETHER BASED IN CONTRACT, TORT OR OTHER LEGAL THEORY. IN NO EVENT SHALL SELLER'S LIABILITY UNDER ANY CLAIM MADE BY BUYER EXCEED THE PURCHASE PRICE PAID FOR THE PRODUCTS.

7. Confidential Information. Buyer acknowledges and agrees that Confidential Information has been and will be received in confidence and will remain the property of Seller. Buyer further agrees that it will not use Seller's Confidential Information for any purpose other than for the benefit of Seller and shall return all such Confidential Information to Seller within thirty (30) days upon request.

8. Loss to Buyer's Property. Buyer's Property will be considered obsolete and may be destroyed by Seller after two (2) consecutive years have elapsed without Buyer ordering the Products manufactured using Buyer's Property. Also, Seller shall not be responsible for any loss or damage to Buyer's Property while it is in Seller's possession or control.

9. Special Tooling. Seller may impose a tooling charge for any Special Tooling. Special Tooling shall be and remain Seller's property. In no event will Buyer acquire any interest in the Special Tooling, even if such Special Tooling has been specially converted or adapted for manufacture of Goods for Buyer and notwithstanding any charges paid by Buyer. Unless otherwise agreed, Seller has the right to alter, discard or otherwise dispose of any Special Tooling or other property owned by Seller in its sole determination at any time.

10. Security Interest. To secure payment of all sums due from Buyer, Seller retains a security interest in all Products delivered to Buyer and, Buyer's acceptance of these Terms is deemed to be a Security Agreement under the Uniform Commercial Code. Buyer authorizes Seller as its attorney to execute and file on Buyer's behalf all documents Seller deems necessary to perfect Seller's security interest.

11. User Responsibility. Buyer, through its own analysis and testing, is solely responsible for making the final selection of the Products and assuring that all performance, endurance, maintenance, safety and warning requirements of the application of the Products are met. Buyer must analyze all aspects of the application and follow applicable industry standards, specifications, and any technical information provided with the Quote or the Products, such as Seller's instructions, guides and specifications. If Seller provides options of or for Products based upon data or specifications provided by Buyer, Buyer is responsible for determining that such data and specifications are suitable and sufficient for all applications and reasonably foreseeable uses of the Products. In the event Buyer is not the end-user of the Products, Buyer will ensure such end-user complies with this paragraph.

12. Use of Products, Indemnity by Buyer. Buyer shall comply with all instructions, guides and specifications provided by Seller with the Quote or the Products. If Buyer uses or resells the Products in any way prohibited by Seller's instructions, guides or specifications, or Buyer otherwise fails to comply with Seller's instructions, guides and specifications, Buyer acknowledges that any such use, resale, or non-compliance is at Buyer's sole risk. Further, Buyer shall indemnify, defend, and hold Seller harmless from any losses, claims, liabilities, damages, lawsuits, judgments and costs (including attorney fees and defense costs), whether for personal injury, property damage, intellectual property infringement or any other claim, arising out of or in connection with: (a) improper selection, design, specification, application, or any misuse of Products; (b) any act or omission, negligent or otherwise, of Buyer; (c) Seller's use of Buyer's Property; (d) damage to the Products from an external cause, repair or attempted repair by anyone other than Seller, failure to follow instructions, guides and specifications provided by Seller, use with goods not provided by Seller, or opening, modifying, deconstructing, tampering with or repackaging the Products; or (e) Buyer's failure to comply with these Terms, including any legal or administrative proceedings, collection efforts, or other actions arising from or relating to such failure to comply. Seller shall not indemnify Buyer under any circumstance except as otherwise provided in these Terms.

13. Cancellations and Changes. Buyer may not cancel or modify, including but not limited to movement of delivery dates for the Products, any order for any reason except with Seller's written consent and upon terms that will indemnify, defend and hold Seller harmless against all direct, incidental and consequential loss or damage and any additional expense. Seller, at any time, may change features, specifications, designs and availability of Products.

14. Assignment. Buyer may not assign its rights or obligations without the prior written consent of Seller.

15. Force Majeure. Seller is not liable for delay or failure to perform any of its obligations by reason of any events or circumstances beyond its reasonable control. Such circumstances include without limitation: accidents, labor disputes or stoppages, government acts or orders, acts of nature, pandemics, epidemics, other widespread illness, or public health emergency, cyber related disruptions, cyber-attacks, ransomware sabotage, delays or failures in delivery from carriers or suppliers, shortages of materials, sudden increases in the price of raw material or components, shutdowns or slowdowns affecting the supply of raw materials or components, or the transportation thereof, oil shortages or oil price increases, energy crisis, energy or fuel interruption, war (whether declared or not) or the serious threat of same, riots, rebellions, acts of terrorism, embargoes, fire or any reason whether similar to the foregoing or otherwise. Seller will resume performance as soon as practicable after the event of force majeure has been removed. All delivery dates affected by an event of force majeure shall be tolled for the duration of such event of force majeure and rescheduled for mutually agreed dates as soon as practicable after the event of force majeure ceases to exist. The right to allocate capacity is in the Seller's sole discretion. An event of force majeure shall not include financial distress, insolvency, bankruptcy, or other similar conditions affecting one of the parties, affiliates and/or sub¬contractors. An event of force majeure in the meaning of these Terms means any circumstances beyond Seller's control that permanently or temporarily hinders performance, even where that circumstance was already foreseen. Buyer shall not be entitled to cancel any orders following its claim of an event of force majeure.

16. Waiver and Severability. Failure to enforce any provision of these Terms will not invalidate that provision; nor will any such failure prejudice either party's right to enforce that provision in the future. Invalidation of any provision of these Terms shall not invalidate any other provision herein and, the remaining provisions will remain in full force and effect.

17. Duration. Unless otherwise stated in the Quote, any agreement governed by or arising from these Terms shall: (a) be for an initial duration of one (1) year; and (b) shall automatically renew for successive one-year terms unless terminated by Buyer with at least 180-days written notice to Seller or if Seller terminates the agreement pursuant to Section 19 of these Terms.

18. Termination. Seller may, without liability to Buyer, terminate any agreement governed by or arising from these Terms for any reason and at any time by giving Buyer thirty (30) days prior written notice. Seller may immediately terminate, in writing, if Buyer: (a) breaches any provision of these Terms, (b) becomes or is deemed insolvent, (c) appoints or has appointed a trustee, receiver or custodian for all or any part of Buyer's property,(d) files a petition for relief in bankruptcy on its own behalf, or one is filed against Buyer by a third party, (e) makes an assignment for the benefit of creditors; or (f) dissolves its business or liquidates all or a majority of its assets.

19. Ownership of Rights. Buyer agrees that (a) Seller (and/or its affiliates) owns or is the valid licensee of Seller's IP and (b) the furnishing of information, related documents or other materials by Seller to Buyer does not grant or transfer any ownership interest or license in or to Seller's IP to Buyer, unless expressly agreed in writing. Without limiting the foregoing, Seller retains ownership of all Software supplied to Buyer. In no event shall Buyer obtain any greater right in and to the Software than a right in a license limited to the use thereof and subject to compliance with any other terms provided with the Software. Buyer further agrees that it will not, directly or through intermediaries, reverse engineer, decompile, or disassemble any Software (including firmware) comprising or contained within a Product, except and only to the extent that such activity may be expressly permitted, either by applicable law or, in the case of open source software, the applicable open source license.

20. Indemnity for Infringement of Intellectual Property Rights. Seller is not liable for infringement of any Intellectual Property Rights except as provided in this Section. Seller will defend at its expense and will pay the cost of any settlement or damages awarded in an action brought against Buyer based on a third-party claim that one or more of the Products infringes the Intellectual Property Rights of a third party in the country of delivery of the Products by Seller to Buyer. Seller's obligation to defend and indemnify Buyer is contingent on Buyer notifying Seller within ten (10) days after Buyer becomes aware of any such claim, and Seller having sole control over the defense of the claim including all negotiations for settlement or compromise. If one or more Products is subject to such a claim, Seller may, at its sole expense and option, procure for Buyer the right to continue using the Products, replace or modify the Products to render them non-infringing, or offer to accept return of the Products and refund the purchase price less a reasonable allowance for depreciation. Seller has no obligation or liability for any claim of infringement: (i) arising from information provided by Buyer (including Seller's use of Buyer's Property); or (ii) directed to any Products for which the designs are specified in whole or part by Buyer; or (iii) resulting from the modification, combination or use in a system of any Products. The foregoing provisions of this Section constitute Seller's sole and exclusive liability and Buyer's sole and exclusive remedy for claims of infringement of Intellectual Property Rights.

21. Governing Law. These Terms, the terms of any Quote, and the sale and delivery of all Products are deemed to have taken place in, and shall be governed and construed in accordance with, the laws of the State of Ohio, as applicable to contracts executed and wholly performed therein and without regard to conflicts of laws principles. Buyer irrevocably agrees and consents to the exclusive jurisdiction and venue of the courts of Cuyahoga County, Ohio with respect to any dispute, controversy or claim arising out of or relating to the sale and delivery of the Products.

22. Entire Agreement. These Terms, along with the terms set forth in the Quote, forms the entire agreement between the Buyer and Seller and constitutes the final, complete and exclusive expression of the terms of sale and purchase. In the event of a conflict between any term set forth in the Quote and these Terms, the terms set forth in the Quote shall prevail. All prior or contemporaneous written or oral agreements or negotiations with respect to the subject matter shall have no effect. No modification to these Terms will be binding on Seller unless agreed to in a writing that is signed by an authorized representative of Seller, excluding email correspondence, 'clickwrap' or other purported electronic assent to different or additional terms. Sections 2-25 of these Terms shall survive termination or cancellation of any agreement governed by or arising from these Terms.

23. No 'Wrap' Agreements/No Authority to Bind. Seller's clicking any buttons or any similar action, such as clicking "I Agree" or "Confirm," to utilize Buyer's software or webpage for the placement of orders, is NOT an agreement to Buyer's Terms and Conditions. NO EMPLOYEE, AGENT OR REPRESENTATIVE OF SELLER HAS THE AUTHORITY TO BIND SELLER BY THE ACT OF CLICKING ANY BUTTON OR SIMILAR ACTION ON BUYER'S WEBSITE OR PORTAL.

24. Compliance with Laws. Buyer agrees to comply with all applicable laws, regulations, and industry and professional standards, including those of the United States of America, and the country or countries in which Buyer may operate, including without limitation the U.S. Foreign Corrupt Practices Act ("FCPA"), the U.S. Anti-Kickback Act ("Anti-Kickback Act"), U.S. and E.U. export control and sanctions laws ("Export Laws"), the U.S. Food Drug and Cosmetic Act ("FDCA"), and the rules and regulations promulgated by the U.S. Food and Drug Administration ("FDA"), each as currently amended. Buyer agrees to indemnify, defend, and hold harmless Seller from the consequences of any violation of such laws, regulations and standards by Buyer, its employees or agents. Buyer represents that it is familiar with all applicable provisions of the FCPA, the Anti-Kickback Act, Export Laws, the FDCA and the FDA and certifies that Buyer will adhere to the requirements thereof and not take any action that would make Seller violate such requirements. Buyer represents and agrees that Buyer will not make any payment or give anything of value, directly or indirectly, to any governmental official, foreign political party or official thereof, candidate for foreign political office, or commercial entity or person, for any improper purpose, including the purpose of influencing such person to purchase Products or otherwise benefit the business of Seller. Buyer further represents and agrees that it will not receive, use, service, transfer or ship any Products from Seller in a manner or for a purpose that violates Export Laws or would cause Seller to be in violation of Export Laws. Buyer agrees to promptly and reliably provide Seller all requested information or documents, including end-user statements and other written assurances, concerning Buyer's ongoing compliance with Export Law. 9/22

Parker's Motion & Control Technologies

At Parker, we're guided by a relentless drive to help our customers become more productive and achieve higher levels of profitability by engineering the best systems for their requirements. It means looking at customer applications from many angles to find new ways to create value. Whatever the motion and control technology need, Parker has the experience, breadth of product and global reach to consistently deliver. No company knows more about motion and control technology than Parker. For further info call 1 800 C-Parker (1 800 272 7537)

Aerospace

Key Markets

Aftermarket services
Commercial transports
Engines
General & business aviation
Helicopters
Launch vehicles
Military aircraft
Missiles
Power generation
Regional transports
Unmanned aerial vehicles

Key Products

Control systems & actuation products
Engine systems & components
Fluid conveyance systems & components
Fluid metering, delivery & atomization devices
Fuel systems & components
Fuel tank inerting systems
Hydraulic systems & components
Thermal management
Wheels & brakes

Climate Control

Key Markets

Agriculture
Air conditioning
Construction Machinery
Food & beverage
Industrial machinery
Life sciences
Oil & gas
Precision cooling
Process
Refrigeration
Transportation

Key Products

Accumulators
Advanced actuators
CO_2 controls
Electronic controllers
Filter driers
Hand shut-off valves
Heat exchangers
Hose & fittings
Pressure regulating valves
Refrigerant distributors
Safety relief valves
Smart pumps
Solenoid valves
Thermostatic expansion valves

Electromechanical

Key Markets

Aerospace
Factory automation
Life science & medical
Machine tools
Packaging machinery
Paper machinery
Plastics machinery & converting
Primary metals
Semiconductor & electronics
Textile
Wire & cable

Key Products

AC/DC drives & systems
Electric actuators, gantry robots & slides
Electrohydrostatic actuation systems
Electromechanical actuation systems
Human machine interface
Linear motors
Stepper motors, servo motors, drives & controls
Structural extrusions

Filtration

Key Markets

Aerospace
Food & beverage
Industrial plant & equipment
Life sciences
Marine
Mobile equipment
Oil & gas
Power generation & renewable energy
Process
Transportation
Water Purification

Key Products

Analytical gas generators
Compressed air filters & dryers
Engine air, coolant, fuel & oil filtration systems
Fluid condition monitoring systems
Hydraulic & lubrication filters
Hydrogen, nitrogen & zero air generators
Instrumentation filters
Membrane & fiber filters
Microfiltration
Sterile air filtration
Water desalination & purification filters & systems

Fluid & Gas Handling

Key Markets

Aerial lift
Agriculture
Bulk chemical handling
Construction machinery
Food & beverage
Fuel & gas delivery
Industrial machinery
Life sciences
Marine
Mining
Mobile
Oil & gas
Renewable energy
Transportation

Key Products

Check valves
Connectors for low pressure fluid conveyance
Deep sea umbilicals
Diagnostic equipment
Hose couplings
Industrial hose
Mooring systems & power cables
PTFE hose & tubing
Quick couplings
Rubber & thermoplastic hose
Tube fittings & adapters
Tubing & plastic fittings

Hydraulics

Key Markets

Aerial lift
Agriculture
Alternative energy
Construction machinery
Forestry
Industrial machinery
Machine tools
Marine
Material handling
Mining
Oil & gas
Power generation
Refuse vehicles
Renewable energy
Truck hydraulics
Turf equipment

Key Products

Accumulators
Cartridge valves
Electrohydraulic actuators
Human machine interfaces
Hybrid drives
Hydraulic cylinders
Hydraulic motors & pumps
Hydraulic systems
Hydraulic valves & controls
Hydrostatic steering
Integrated hydraulic circuits
Power take-offs
Power units
Rotary actuators
Sensors

Pneumatics

Key Markets

Aerospace
Conveyor & material handling
Factory automation
Life science & medical
Machine tools
Packaging machinery
Transportation & automotive

Key Products

Air preparation
Brass fittings & valves
Manifolds
Pneumatic accessories
Pneumatic actuators & grippers
Pneumatic valves & controls
Quick disconnects
Rotary actuators
Rubber & thermoplastic hose & couplings
Structural extrusions
Thermoplastic tubing & fittings
Vacuum generators, cups & sensors

Process Control

Key Markets

Alternative fuels
Biopharmaceuticals
Chemical & refining
Food & beverage
Marine & shipbuilding
Medical & dental
Microelectronics
Nuclear Power
Offshore oil exploration
Oil & gas
Pharmaceuticals
Power generation
Pulp & paper
Steel
Water/wastewater

Key Products

Analytical Instruments
Analytical sample conditioning products & systems
Chemical injection fittings & valves
Fluoropolymer chemical delivery fittings, valves & pumps
High purity gas delivery fittings, valves, regulators & digital flow controllers
Industrial mass flow meters/ controllers
Permanent no-weld tube fittings
Precision industrial regulators & flow controllers
Process control double block & bleeds
Process control fittings, valves, regulators & manifold valves

Sealing & Shielding

Key Markets

Aerospace
Chemical processing
Consumer
Fluid power
General industrial
Information technology
Life sciences
Microelectronics
Military
Oil & gas
Power generation
Renewable energy
Telecommunications
Transportation

Key Products

Dynamic seals
Elastomeric o-rings
Electro-medical instrument design & assembly
EMI shielding
Extruded & precision-cut, fabricated elastomeric seals
High temperature metal seals
Homogeneous & inserted elastomeric shapes
Medical device fabrication & assembly
Metal & plastic retained composite seals
Shielded optical windows
Silicone tubing & extrusions
Thermal management
Vibration dampening

ENGINEERING YOUR SUCCESS.

09/23 / Catalog HY08-4005-1/NA

Parker Hannifin Corporation
Cylinder and Accumulator Division
500 South Wolf Road
Des Plaines, IL 60016
phone (847) 298-2400
fax (800) 892-1008
www.parker.com/cylinder-accumulator

Authorized Distributor
MONILEK OILFIELD

E: sales@monilek.com
W: www.monilekgroup.com