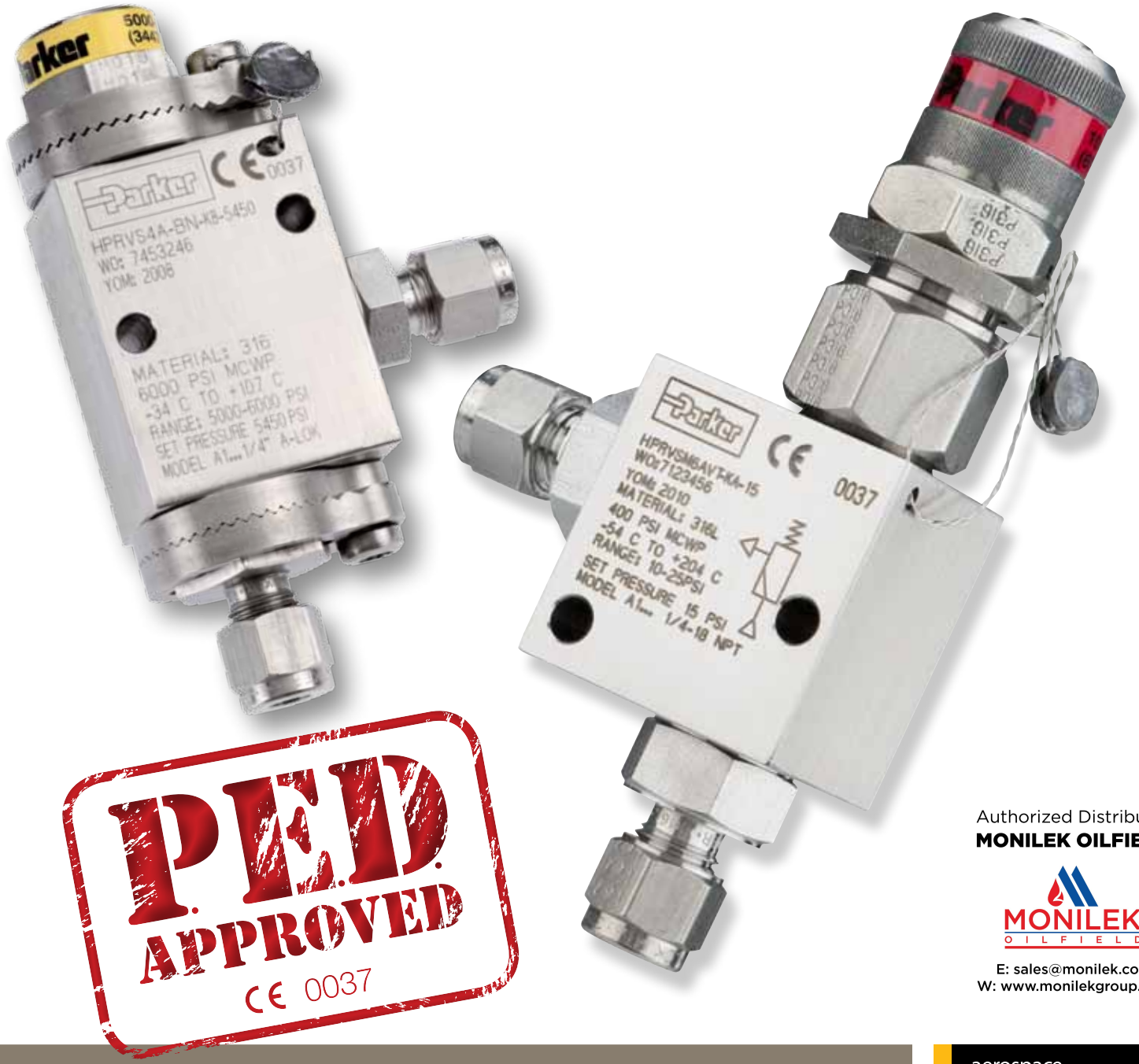

PED APPROVED
CE 0037

Authorized Distributor
MONILEK OILFIELD

MONILEK OILFIELD

E: sales@monilek.com
W: www.monilekgroup.com

HPRV Proportional Relief Valves

Catalog 4190-HPRV

aerospace
climate control
electromechanical
filtration
fluid & gas handling
hydraulics
pneumatics
process control
sealing & shielding

Parker

ENGINEERING YOUR SUCCESS.

Contents

High pressure relief valve

Page 3 Introduction - High Pressure

Page 4 Seal & Spring Options

Page 5 Dimensions

Page 6 Materials of Construction

Low pressure relief valve

Page 7 Introduction - Low Pressure

Page 8 Seal & Spring Options

Page 9 Dimensions

Page 10 Materials of Construction

Page 11 How to Order

WARNING

FAILURE, IMPROPER SELECTION OR IMPROPER USE OF THE PRODUCTS AND/OR SYSTEMS DESCRIBED HEREIN OR RELATED ITEMS CAN CAUSE DEATH, PERSONAL INJURY AND PROPERTY DAMAGE.

This document and other information from Parker Hannifin Corporation, its subsidiaries or its authorized distributors provide product and/or system options for further investigation by users having technical expertise. It is important that you analyze all aspects of your application and review the information concerning the product or system in the current product catalog. Due to the variety of operating conditions and applications for these products or systems, the user, through its own analysis and testing, is solely responsible for making the final selection of the products and systems and assuring that all performance, safety and warning requirements of the application are met.
The products described herein, including without limitation, product features, specifications, designs, availability and pricing, are subject to change by Parker Hannifin Corporation and its subsidiaries at any time without notice.

Offer of Sale

The items described in this document are available for sale by Parker Hannifin Corporation, its subsidiaries or its authorized distributors. Any sale contract entered into by Parker will be governed by the provisions stated in Parker's standard terms and conditions of sale (copy available upon request).

Introduction: High Pressure Relief Valve

The Parker High Pressure Relief Valve (HPRV) provides an automatic protection mechanism for process instrumentation systems. When upstream pressure exceeds the closing force exerted by the valve's spring, the lower stem opens and permits flow through the valve's outlet port - which can be ducted to a safe place or released to atmosphere. Flow rate increases proportionately to the increase in upstream pressure.

CE marked and certified to the highest Category-IV level of the Pressure Equipment Directive (PED), the HPRV valve's design provides users with accurate and consistent cracking and resealing operation. The valve's innovative seat design additionally operates over an extremely wide pressure range (150 to 6000 psi, 10.3 to 414 bar), providing a universal solution for the vast majority of instrumentation applications.

Pressure settings are externally adjustable. Eight different spring ranges provide greater system sensitivity and enhanced performance.

Features

- **Captured moulded seat design is blow-out and chip resistant**
- **Colour coded springs and labels indicate spring cracking range**
- **Unique Tru-loc™ facility prevents accidental adjustment**
- **Lock wire feature secures a given pressure setting**
- **Low friction stem seal design prevents friction which increases accuracy of cracking pressure and reseat pressure**
- **Balanced poppet design ensures consistent cracking pressure regardless of system back pressure**
- **Orifice sizes: 3.6mm (0.142")**
- **Multiple end connections available**

Specifications

Working Pressure

Maximum Cold Working Pressure: 6000 psi (414 bar). Up to 8000 psi (552 bar) during relief with no internal seal damage. Maximum back pressure: 2000 psi (137.9 bar).

Cracking Pressure

Eight springs, from 150 psi to 6000 psi in the following ranges: 150-375 psi, 325-775 psi, 725-1525 psi, 1475-2275 psi, 2225-3025 psi, 2975-4025 psi, 3975-5025 psi, 4975-6000 psi.

(See table on page 4 for bar equivalents).

Cracking pressure within 3% of set pressure.
Reseat pressure within 15% of cracking pressure.

Note: Valves which are not actuated for a period of time may initially crack at higher than set pressures.

Maximum Relieving Flow

Water 1.686 l/min @ 150 psi with zero back pressure.
Nitrogen 313 l/min @ 150 psi with zero back pressure.

Note: For a 'safe' system the relieving flow capacity should exceed the maximum input flow. The maximum discharge capacity is not a given design specification for this valve, therefore the maximum discharge capacity quoted within the instructions is for informative purposes only. Should this guideline value not be sufficient to protect equipment or systems from exceeding maximum pressure, another type of relief or safety valve should be used.

Seal & Spring Options

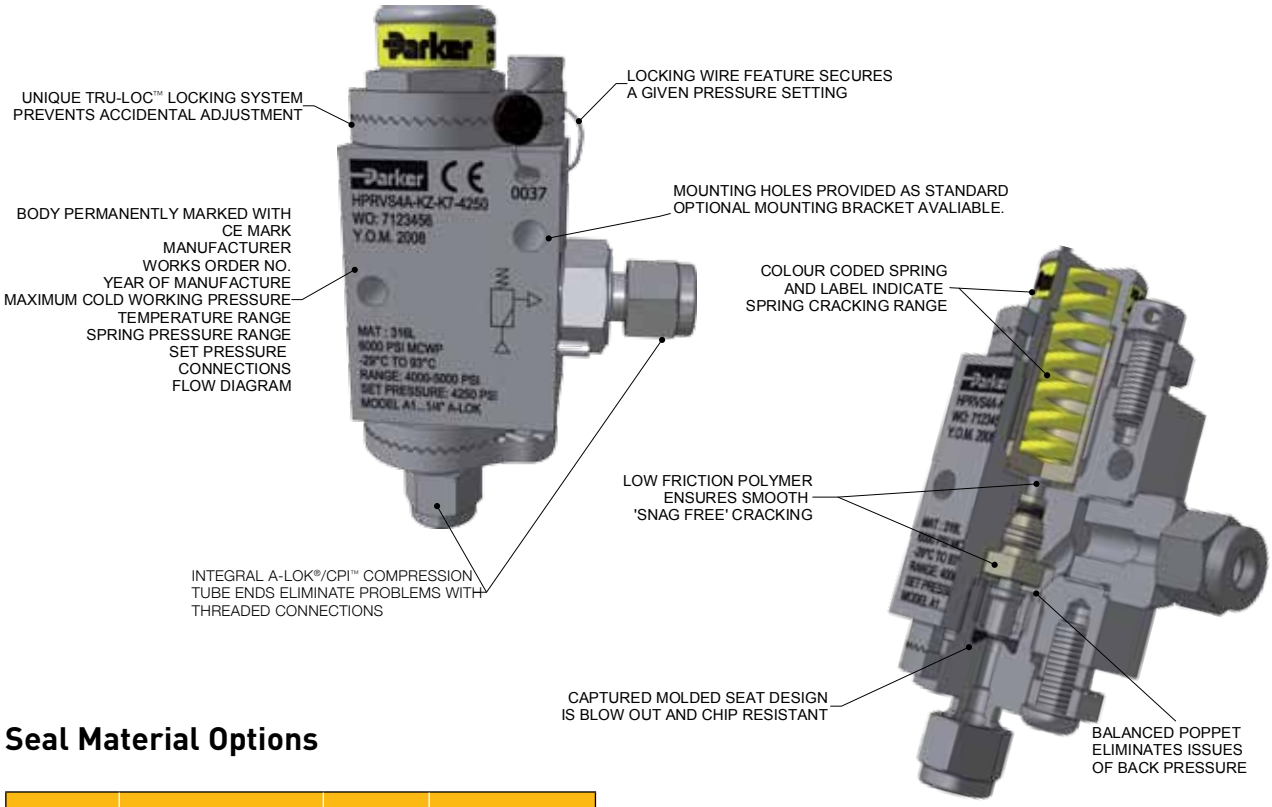

Seal Material Options

Designator	Material	Shore Hardness	Temperature Range
V	Fluorocarbon Rubber	90	-23°C to +204°C (-10°F to +400°F)
EPR	Ethylene Propylene Rubber	90	-57°C to +135°C (-70°F to +135°F)
BN	Nitrile Rubber (Buna-N)	90	-34°C to +107°C (-30°F to +225°F)
KZ	Highly Florinated Fluorocarbon Rubber	90	-29°C to +93°C (-20°F to +200°F)
NE	Neoprene Rubber	70	-43°C to +121°C (-45°F to +250°F)

Spring Cracking Pressures

Designator	Pressure Range		Colour Code
	psi	bar	
K1	150-375	10.3-25.9	Grey
K2	325-775	22.4-53.4	Red
K3	725-1525	50.0-105.1	Orange
K4	1475-2275	101.7-156.9	Yellow
K5	2225-3025	153.4-208.6	Light Green
K6	2975-4025	205.1-277.5	Light Blue
K7	3975-5025	274.1-346.5	Violet
K8	4975-6000	343.0-414.0	Lemon Yellow

Available End Connections

Z - Single ferrule CPI™ compression port

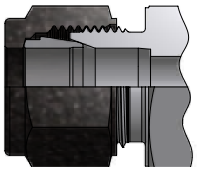

A - Two ferrule A-LOK® compression port

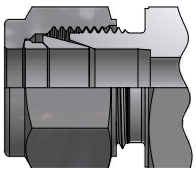

M - ANSI/ASME B1.20.1 External pipe threads

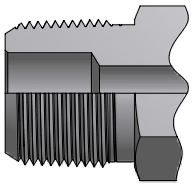

F - ANSI/ASME B1.20.1 Internal pipe threads

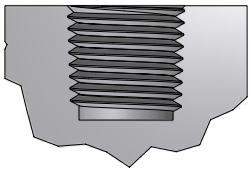

Dimensions

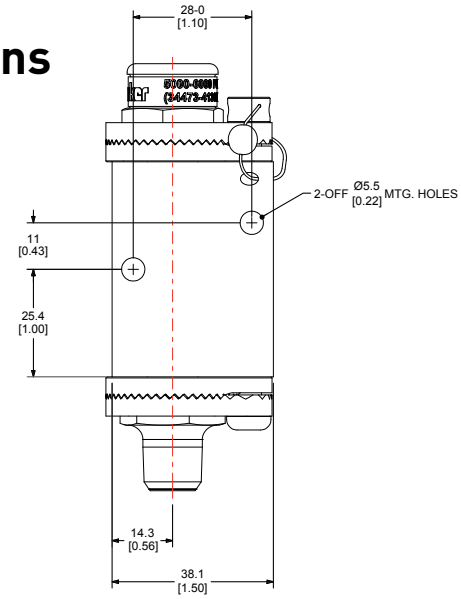

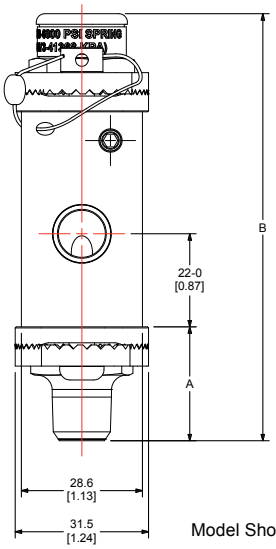

Model Shown: HPRVS4M4F-V-K8-5500

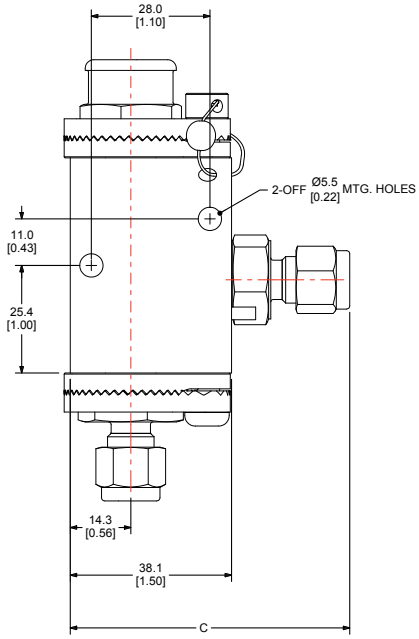

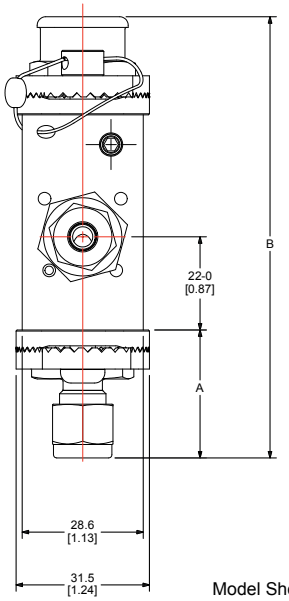

Model Shown: HPRVS4A-V-K8-5500

Basic Part Number	End Connections		Flow Data				Dimensions					
	Inlet	Outlet	Outlet		CV	X_T	A		B		C	
			mm	inch			mm	inch	mm	inch	mm	inch
HPRV_4A	1/4 O.D. A-LOK®	1/4" O.D A-LOK®	3.6	0.14	0.41	0.67	27.2	1.07	105.8	4.17	63.5	2.50
HPRV_4Z	1/4" O.D. CPI™	1/4" O.D CPI™					27.2	1.07	105.8	4.17	63.5	2.50
HPRV_M6A	6mm O.D. A-LOK®	6mm O.D. A-LOK®					27.2	1.07	105.8	4.17	63.5	2.50
HPRV_M6Z	6mm O.D. CPI™	6mm O.D. CPI™					27.2	1.07	105.8	4.17	63.5	2.50
HPRV_4M4F	1/4-18 NPT (male)	1/4-18 NPT (Female)					26.9	1.06	105	4.13	NA	

For A-LOK® and CPI™, dimensions are measured with nuts in the finger tight position
Gas flow will be choked when P1 - P2 / P1 = XT

[x] denotes dimesions in inches

HPRV (High Pressure)

Materials of Construction

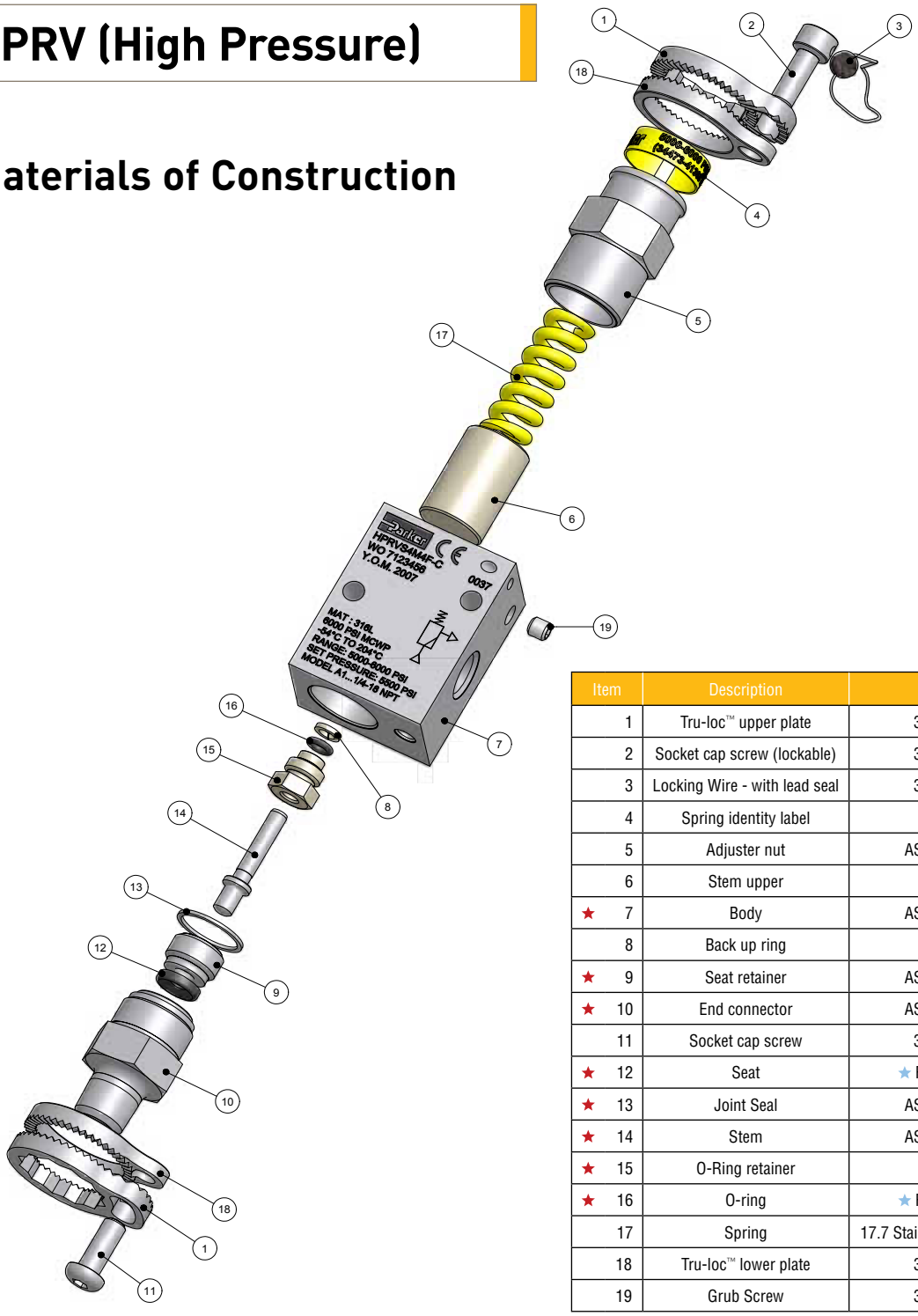

Item	Description	Material
1	Tru-loc™ upper plate	316 Stainless Steel
2	Socket cap screw (lockable)	316 Stainless Steel
3	Locking Wire - with lead seal	316 Stainless Steel
4	Spring identity label	Vinyl
5	Adjuster nut	ASTM A 479 type 316
6	Stem upper	PEEK
★ 7	Body	ASTM A 479 type 316
8	Back up ring	PEEK
★ 9	Seat retainer	ASTM A 479 type 316
★ 10	End connector	ASTM A 479 type 316
11	Socket cap screw	316 Stainless Steel
★ 12	Seat	★ Fluorocarbon Rubber
★ 13	Joint Seal	ASTM A 479 type 316
★ 14	Stem	ASTM A 479 type 316
★ 15	O-Ring retainer	PEEK
★ 16	O-ring	★ Fluorocarbon Rubber
17	Spring	17.7 Stainless Steel (Colour Coded)
18	Tru-loc™ lower plate	316 Stainless Steel
19	Grub Screw	316 Stainless Steel

★ Wetted parts.
★ Optional seat and seal materials are located in How to Order section.

Declaration of PED Compliance

This relief valve conforms to the Pressure Equipment Directive 97/23/EC, Safety Accessories / Category IV, as per article 1 section 2.1.3. CE 0037. All valves are CE marked and supplied with a full declaration of conformity. Parker Hannifin has been audited by Zurich Risk Services and meets the requirements of assessment procedure module H1 and awarded an EC Design Examination Certificate EN – 044020/B1.

These valves also conform to Directive 94/9/EC relating to equipment intended for use in potentially explosive atmospheres and is ATEX certified.

Introduction: Low Pressure Relief Valve

The Parker Low Pressure Relief Valve provides an automatic protection mechanism for process instrumentation systems. When upstream pressure exceeds the closing force exerted by the valve's spring, the lower stem opens and permits flow through the valve's outlet port - which can be ducted to a safe place or released to atmosphere. Flow rate increases proportionately to the increase in upstream pressure.

CE marked and certified to the highest Category-IV level of the Pressure Equipment Directive (PED), the valve's design provides users with accurate and consistent cracking and resealing operation.

Features

- **Pressure settings are externally adjustable. Six different spring ranges provide greater system sensitivity and enhanced performance**
- **Colour coded springs and labels indicate spring cracking range**
- **Lock wire feature secures a given pressure setting**
- **Back pressure has minimum effect on cracking pressure**
- **Orifice sizes: 5.2mm (0.203")**
- **Multiple end connections available**

Specifications

Working Pressure

Maximum Cold Working Pressure: 400 psi (27.6 bar). Up to 600 psi (41 bar) during relief with no internal seal damage.

Cracking Pressure

Six springs, from 10 psi to 400 psi in the following ranges: 10-25 psi (0.7-1.7 bar); 25-50 psi (1.7-3.4 bar); 50-100 psi (3.4-6.9 bar); 100-150 psi (6.9-10.3 bar); 150-225 psi (10.3-15.5 bar); 225-400 psi (15.5-27.6 bar).

Cracking pressure within 3% of set pressure.
Reseat pressure within 15% of cracking pressure.

Note: Valves which are not actuated for a period of time may initially crack at higher than set pressures.

Maximum Relieving Flow

Water 2.4l/min @ 10 psi set pressure with zero back pressure. Nitrogen 6.8 l/min @ 10 psi set pressure with zero back pressure. Both at ambient temperature.

Note: For a 'safe' system the relieving flow capacity should exceed the maximum input flow. The maximum discharge capacity is not a given design specification for this valve, therefore the maximum discharge capacity quoted within the instructions is for informative purposes only. Should this guideline value not be sufficient to protect equipment or systems from exceeding maximum pressure, another type of relief or safety valve should be used.

HPRV (Low Pressure)

Seal & Spring Options

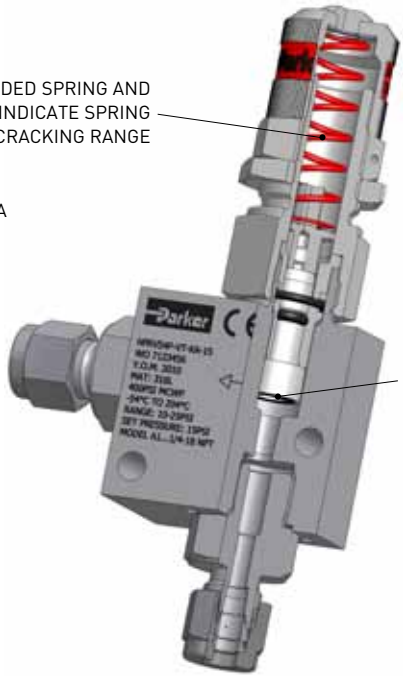

Mounting holes provided as standard. Optional mounting bracket available.

Seal Material Options

Designator	Material	Shore Hardness	Temperature Range
V	Fluorocarbon Rubber	90	-23°C to +204°C (-10°F to +400°F)
EPR	Ethylene Propylene Rubber	90	-57°C to +135°C (-70°F to +275°F)
BN	Nitrile Rubber (Buna-N)	90	-34°C to +107°C (-30°F to +225°F)
KZ	Highly Florinated Fluorocarbon Rubber	90	-29°C to +93°C (-20°F to +200°F)
NE	Neoprene Rubber	70	-43°C to +121°C (-45°F to +250°F)

Spring Cracking Pressures

Designator	Pressure Range		Colour Code
	psi	bar	
KA	10-25	0.7-1.7	Magenta
KB	25-50	1.7-3.4	Brown
KC	50-100	3.4-6.9	Purple
KD	100-150	6.9-10.3	Dark Green
KE	150-225	10.3-15.5	Dark Blue
KG	225-400	15.5-27.6	White

Available End Connections

Z - Single ferrule CPI™ compression port

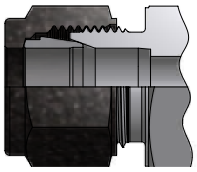

A - Two ferrule A-LOK® compression port

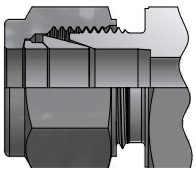

M - ANSI/ASME B1.20.1 External pipe threads

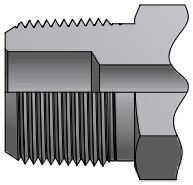

F - ANSI/ASME B1.20.1 Internal pipe threads

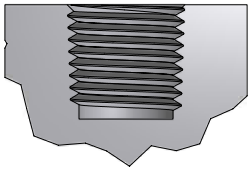

Dimensions

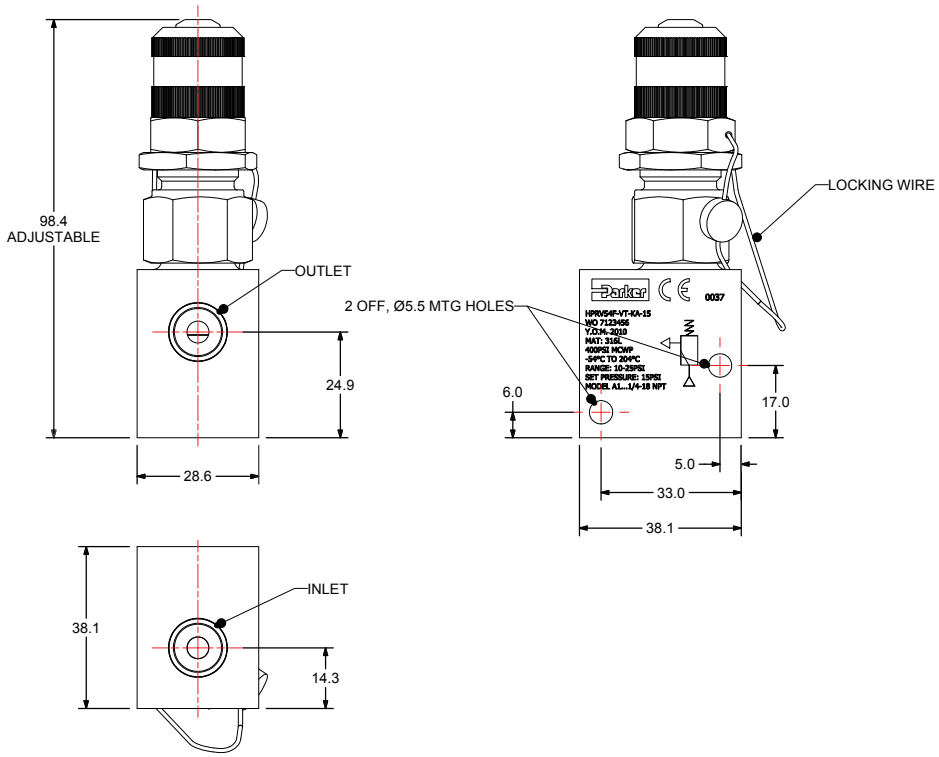

1/4-18 NPT (MALE) INLET

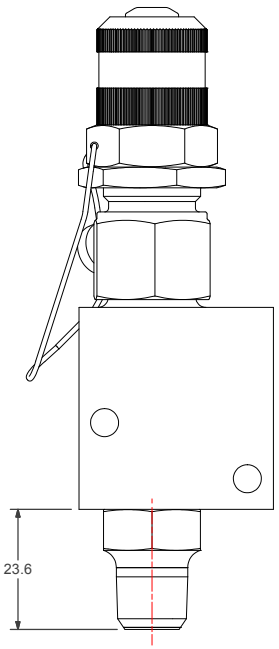

A-LOK INLET / OUTLET

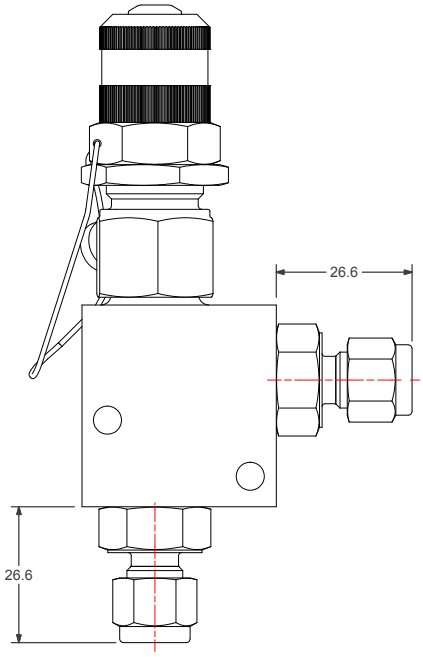

HPRV (Low Pressure)

Materials of Construction

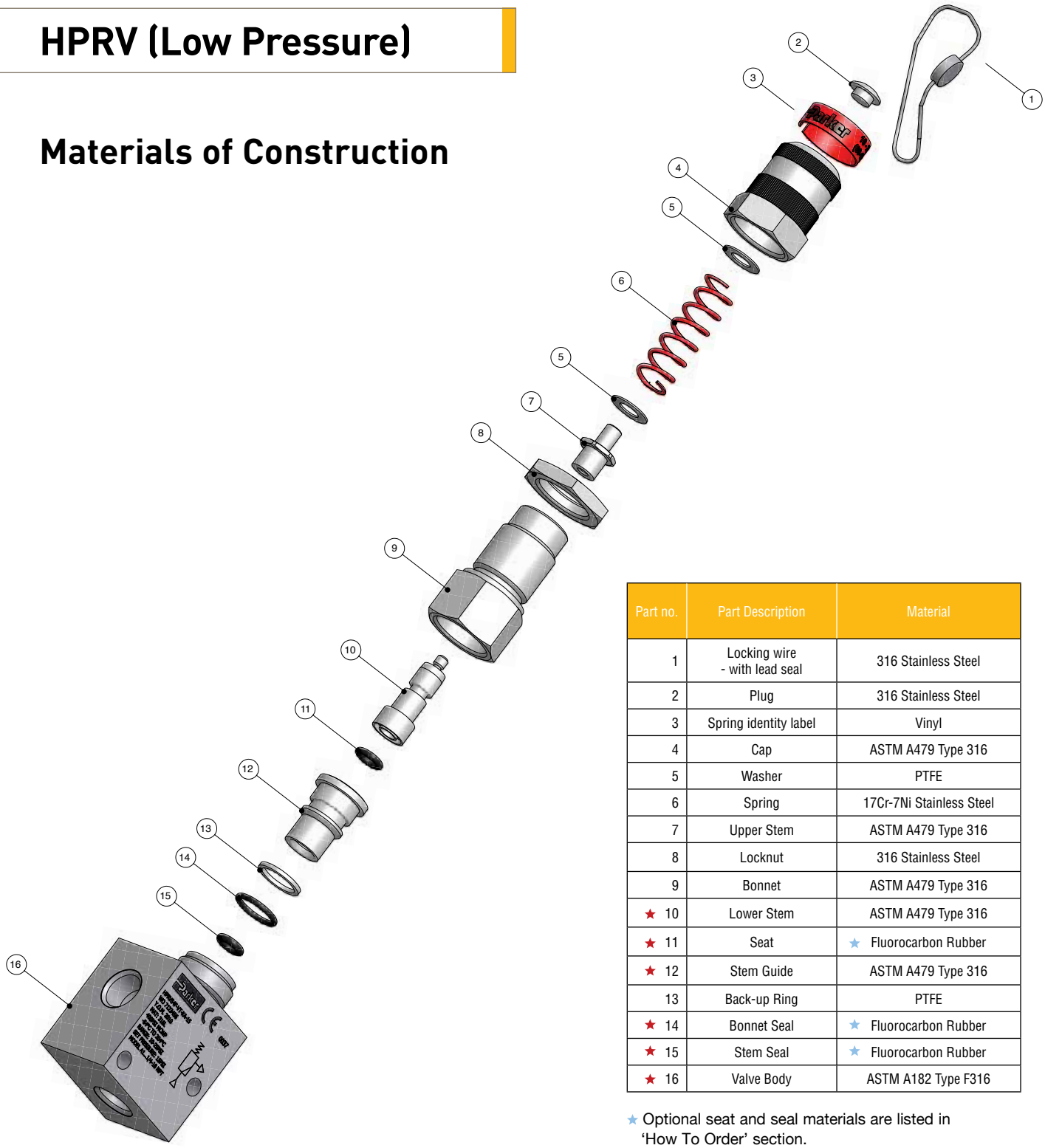

Part no.	Part Description	Material
1	Locking wire - with lead seal	316 Stainless Steel
2	Plug	316 Stainless Steel
3	Spring identity label	Vinyl
4	Cap	ASTM A479 Type 316
5	Washer	PTFE
6	Spring	17Cr-7Ni Stainless Steel
7	Upper Stem	ASTM A479 Type 316
8	Locknut	316 Stainless Steel
9	Bonnet	ASTM A479 Type 316
★ 10	Lower Stem	ASTM A479 Type 316
★ 11	Seat	★ Fluorocarbon Rubber
★ 12	Stem Guide	ASTM A479 Type 316
13	Back-up Ring	PTFE
★ 14	Bonnet Seal	★ Fluorocarbon Rubber
★ 15	Stem Seal	★ Fluorocarbon Rubber
★ 16	Valve Body	ASTM A182 Type F316

★ Optional seat and seal materials are listed in 'How To Order' section.

★ Wetted parts.

Declaration of PED Compliance

This relief valve conforms to the Pressure Equipment Directive 97/23/EC, Safety Accessories / Category IV, as per article 1 section 2.1.3. CE 0037. All valves are CE marked and supplied with a full declaration of conformity. Parker Hannifin has been audited by Zurich Risk Services and meets the requirements of assessment procedure module H1 and awarded an EC Design Examination Certificate CEN-060749/B1.

These valves also conform to Directive 94/9/EC relating to equipment intended for use in potentially explosive atmospheres and is ATEX certified.

How to Order - HPRV

The correct part number is easily derived from the following number sequence.
The seven product characteristics required are coded as shown below.

HPRV	S	4M	4F	EPR	K5	2700
Valve Series	Body Material	Inlet Port	Outlet Port	Seals	Spring Rating	Set Pressure
HPRV	**S** Stainless Steel - 316	**4M** 1/4-18 NPT (Male) **4F** 1/4-18 NPT (Female) **4A** 1/4" O.D. A-LOK® **M6A** 6mm O.D. A-LOK® **4Z** 1/4" O.D. CPI™ **M6Z** 6mm O.D. CPI™		**V** Fluorocarbon Rubber **EPR** Ethylene Propylene Rubber **BN** Nitrile Rubber **KZ** Highly Florinated Fluorocarbon Rubber **NE** Neoprene Rubber	High Pressure **K1** 150 - 375 psi **K2** 325 - 775 psi **K3** 725 - 1525 psi **K4** 1475 - 2275 psi **K5** 2225 - 3025 psi **K6** 2975 - 4025 psi **K7** 3975 - 5025 psi **K8** 4975 - 6000 psi Low Pressure **KA** 10 - 25 psi **KB** 25 - 50 psi **KC** 50 - 100 psi **KD** 100 - 150 psi **KE** 150 - 225 psi **KG** 225 - 400 psi	Denote set pressure in psi

Example

HPRV	S	M6A		EPR	K5	2500

Describes a HPRV Series proportional relief valve equipped with 6mm A-LOK®/CPI™ compression inlet and outlet ports, ethylene propylene rubber seals, stainless steel construction, fitted with a 2250 - 3000 psi spring. Supplied pre-set at 2500 psi.

Spares

The following spring and seal kits are only available for low pressure valves.

Spring Kits

Designator	Kit Part Number	Pressure Range		Colour Code
		psi	bar	
KA	KIT-RL4SP-10-25	10-25	0.7-1.7	Magenta
KB	KIT-RL4SP-25-50	25-50	1.7-3.4	Brown
KC	KIT-RL4SP-50-100	50-100	3.4-6.9	Purple
KD	KIT-RL4SP-100-150	100-150	6.9-10.3	Dark Green
KE	KIT-RL4SP-150-225	150-225	10.3-15.5	Dark Blue
KG	KIT-RL4SP-225-400	225-400	15.5-27.6	White

Spring kit contains:
Spring; Coded label; PTFE washers;
Locking wire / lead seal; Installation instructions

Seal Kits

Seal kit order number	Seat / Seal Material
KIT - RL4 - VT	Fluorocarbon Rubber
KIT - RL4 - BNT	Nitrile Rubber
KIT - RL4 - EPRT	Ethylene Propylene Rubber
KIT - RL4 - NET	Neoprene Rubber
KIT - RL4 - KZT	Highly Florinated Fluorocarbon Rubber

Seal kit contains:
Stem seal; Bonnet seal; PTFE Back-Up Ring;
Lower Stem Assembly

Parker Worldwide

AE – UAE, Dubai
Tel: +971 4 8875600
parker.me@parker.com

AR – Argentina, Buenos Aires
Tel: +54 3327 44 4129

AT – Austria, Wiener Neustadt
Tel: +43 (0)2622 23501-0
parker.austria@parker.com

AT – Eastern Europe,
Wiener Neustadt
Tel: +43 (0)2622 23501 970
parker.easteurope@parker.com

AU – Australia, Castle Hill
Tel: +61 (0)2-9634 7777

AZ – Azerbaijan, Baku
Tel: +994 50 2233 458
parker.azerbaijan@parker.com

BE/LX – Belgium, Nivelles
Tel: +32 (0)67 280 900
parker.belgium@parker.com

BR – Brazil, Cachoeirinha RS
Tel: +55 51 3470 9144

BY – Belarus, Minsk
Tel: +375 17 209 9399
parker.belarus@parker.com

CA – Canada, Grimsby, Ontario
Tel +1 905-945-2274
ipd_canada@parker.com

CH – Switzerland, Etoy
Tel: +41 (0) 21 821 02 30
parker.switzerland@parker.com

CN – China, Shanghai
Tel: +86 21 5031 2525

CZ – Czech Republic, Klecany
Tel: +420 284 083 111
parker.czechrepublic@parker.com

DE – Germany, Kaarst
Tel: +49 (0)2131 4016 0
parker.germany@parker.com

DK – Denmark, Ballerup
Tel: +45 43 56 04 00
parker.denmark@parker.com

ES – Spain, Madrid
Tel: +34 902 33 00 01
parker.spain@parker.com

FI – Finland, Vantaa
Tel: +358 (0)20 753 2500
parker.finland@parker.com

FR – France, Contamine s/Arve
Tel: +33 (0)4 50 25 80 25
parker.france@parker.com

GR – Greece, Athens
Tel: +30 210 933 6450
parker.greece@parker.com

HK – Hong Kong
Tel: +852 2428 8008

HU – Hungary, Budapest
Tel: +36 1 220 4155
parker.hungary@parker.com

IE – Ireland, Dublin
Tel: +353 (0)1 466 6370
parker.ireland@parker.com

IN – India, Mumbai
Tel: +91 22 6513 7081-85

IT – Italy, Corsico (MI)
Tel: +39 02 45 19 21
parker.italy@parker.com

JP – Japan, Fujisawa
Tel: +(81) 4 6635 3050

KR – South Korea, Seoul
Tel: +82 2 559 0400

KZ – Kazakhstan, Almaty
Tel: +7 7272 505 800
parker.easteurope@parker.com

LV – Latvia, Riga
Tel: +371 6 745 2601
parker.latvia@parker.com

MX – Mexico, Apodaca
Tel: +52 81 8156 6000

MY – Malaysia, Shah Alam
Tel: +603-78490800

NL – The Netherlands,
Oldenzaal
Tel: +31 (0)541 585 000
parker.nl@parker.com

NO – Norway, Stavanger
Tel: +47 (0)51 826 300
parker.norway@parker.com

NZ – New Zealand, Mt Wellington
Tel: +64 9 574 1744

PL – Poland, Warsaw
Tel: +48 (0)22 573 24 00
parker.poland@parker.com

PT – Portugal, Leca da Palmeira
Tel: +351 22 999 7360
parker.portugal@parker.com

RO – Romania, Bucharest
Tel: +40 21 252 1382
parker.romania@parker.com

RU – Russia, Moscow
Tel: +7 495 645-2156
parker.russia@parker.com

SE – Sweden, Spånga
Tel: +46 (0)8 59 79 50 00
parker.sweden@parker.com

SG – Singapore,
Tel: +65 6887 6300

SK – Slovakia, Banská Bystrica
Tel: +421 484 162 252
parker.slovakia@parker.com

SL – Slovenia, Novo Mesto
Tel: +386 7 337 6650
parker.slovenia@parker.com

TH – Thailand, Bangkok
Tel: +662 717 8140

TR – Turkey, Istanbul
Tel: +90 216 4997081
parker.turkey@parker.com

TW – Taiwan, Taipei
Tel: +886 2 2298 8987

UA – Ukraine, Kiev
Tel: +380 44 494 2731
parker.ukraine@parker.com

UK – United Kingdom,
Barnstaple
Tel: +44 (0)1271 313131
parker.uk@parker.com

US – USA, Cleveland
Tel: +1 216 896 3000

VE – Venezuela, Caracas
Tel: +58 212 238 5422

ZA – South Africa,
Kempton Park
Tel: +27 (0)11 961 0700
parker.southafrica@parker.com

European Product Information Centre
Free phone: 00 800 27 27 5374
(from AT, BE, CH, CZ, DE, DK, EE, EI, ES, FI, FR, IT, NL, NO, PL, RU, SE, SK, UK, ZA)

© 2008 Parker Hannifin Corporation. All rights reserved

Parker Hannifin Ltd
Instrumentation Products Division Europe,
Riverside Road,
Pottington Business Park,
Barnstaple, Devon, EX31 1NP
United Kingdom
Tel.: +44 (0) 1271 313131
Fax: +44 (0) 1271 373636
www.parker.com/ipd

Parker Hannifin Corporation
Instrumentation Products Division
1005 A Cleaner Way
Huntsville, AL 35805
Tel: + 1 (256) 881-2040
Fax: + 1 (256) 881-5072
www.parker.com/ipdus

Catalogue 4190-HPRV