Schrader Bellows®

PA-2 Series

Heavy-Duty Industrial Tie Rod Pneumatic Cylinders

Authorized Distributor
MONILEK OILFIELD

MONILEK OILFIELD

E: sales@monilek.com
W: www.monilekgroup.com

A

PA-2

NC9

Rod Lock

Contents

Features 4
Specifications / Mountings / Ordering Notes 5
Design Features / Adjustable Floating Cushions..... 6-7
Mounting Information..... 8-37
Cylinder Accessories 38, 40-43
Double Rod Models 39
“Style 6” Piston Rod End 44-45
How to Order 46-47
PN Series Non-Lube..... 48-50

Schrader Bellows PA-2 Series Heavy Duty Air Cylinder

When the job calls for reliable, heavy-duty performance, specify PA-2 Series. A 100,000 psi yield strength chrome-plated, case-hardened piston rod. A 125,000 psi yield strength rod-end stud with rolled threads. 100,000 psi yield strength tie rods. With construction like this, the Schrader Bellows PA-2 Series is rated for air service to 250 psi. This is one heavy-duty air cylinder that's really heavy duty.

They're truly premium quality cylinders, factory prelubricated standard with a non-lube option for millions of maintenance-free cycles. And to make sure every cylinder is premium quality, we subject each and every one – not just batch samples – to tough inspection and performance tests. See inside for the inside story on all the features that make PA-2 Series the high performance, long lasting choice for all your heavy-duty air applications.

Note: Rod diameters over 2½" will use a threaded nose gland.

Standard Specifications

- Heavy Duty Service – ANSI/(NFPA) T3.6.7R3-2009 Specifications and Mounting Dimension Standards
- Standard Construction – Square Head – Tie Rod Design
- Nominal Pressure – Up to 250 psi Air Service
- Standard Fluid – Filtered Air
- Standard Temperature – -10°F. to +165°F.*
- Bore Sizes – 1" through 14"
- Piston Rod Diameter – 1/2" through 5 1/2"
- Mounting Styles – 14 standard styles at various application ratings
- Strokes – Available in any practical stroke length
- Cushions – Optional at either end or both ends of stroke. "Float Check" at cap end.
- Rod Ends – Three Standard Choices – Specials to Order

* See Section C, "Operating Fluids and Temperature Range" for higher temperature service.

In line with our policy of continuing product improvement, specifications in this catalog are subject to change.

Mounting Styles and Ordering Notes

Available in all bore and rod combinations.

Side Lug

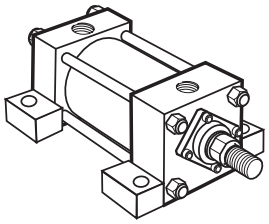

MS2

Side Tap

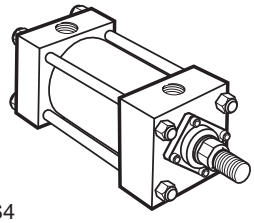

MS4

Tie Rods Extended Both Ends

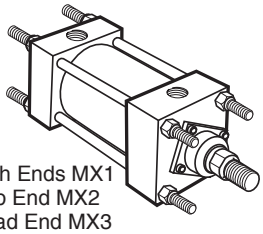

Both Ends MX1
Cap End MX2
Head End MX3

Trunnion Mounts

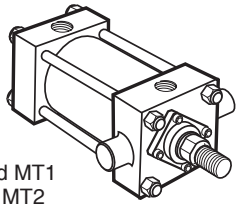

Head MT1
Cap MT2
Intermediate Fixed MT4

Cap Fixed Clevis

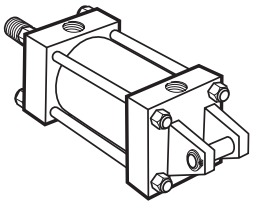

MP1 Pivot Pin Included

Spherical Bearing

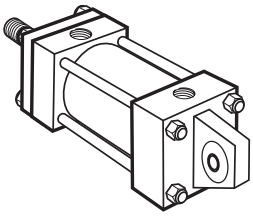

MPU3

Double End Construction

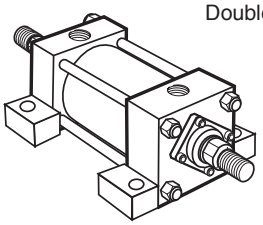

Available in all bore and rod combinations in the following mounting styles: MDS2, MDS4, MDX1, MDX3, MDT1, MDT4, and MDF1 (1"-6"). MDF5 (1"-6") and MDE3 (8"-14").

Available in all bore and rod combinations through 6" bore. 8"-14" bores supplied as Head Square (ME3) and Cap Square (ME4) mounts.

Head Rectangular Flange

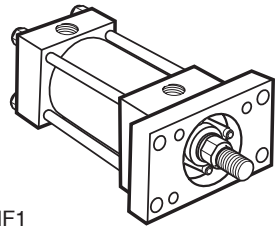

MF1

Cap Rectangular Flange

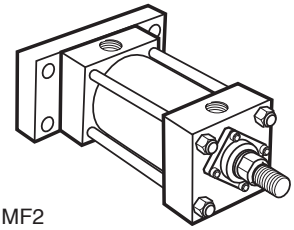

MF2

Head Square Flange

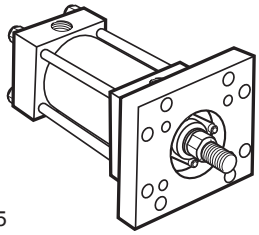

MF5

Cap Square Flange

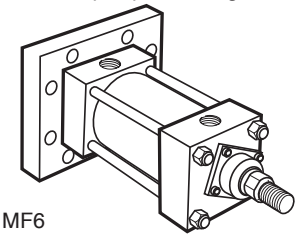

MF6

Rod Bearing Cartridges

R = Removable Cartridge
T = Tie Rod Retained Cartridge

*MF5, MF6, MF1, MF2 not available in these bore sizes.

Bore	Rod Dia.	MX1 MX3 MX2 MS4 MS2 MF6 MF2 MT2 MT1 MT4 MPU3 MP1	MF1 MF5	ME3 ME4
1	1/2, 5/8	T	T	N/A
1 1/2	5/8	R	T	N/A
	1	T	T	N/A
2	5/8	R	R	N/A
	1	R	T	N/A
	1 3/8	T	T	N/A
2 1/2	5/8	R	R	N/A
	1	R	R	N/A
	1 3/8	T	T	N/A
	1 3/4	T	T	N/A
3 1/4	1	R	R	N/A
	1 3/8	R	R	N/A
	1 3/4, 2	R	T	N/A
4	1, 1 3/8	R	R	N/A
	1 3/4, 2	R	R	N/A
	2 1/2	R	T	N/A
5	1 - 2	R	R	N/A
	2 1/2	R	T	N/A
	3, 3 1/2	T	T	N/A
6	1 3/8 - 2 1/2	R	R	N/A
	3 - 4	T	T	N/A
7*	1 3/8, 1 3/4, 2	R	N/A	R
8*	1 3/8 - 4 1/2	R	N/A	R
	5, 5 1/2	R	N/A	R
10*	1 3/4 - 5 1/2	R	N/A	R
12*	2 - 5 1/2	R	N/A	R
14*	2 1/2 - 5 1/2	R	N/A	R

The inside story on why PA-2 Series is your best choice in heavy duty air cylinders.

Piston Rod – Medium carbon steel, induction case-hardened, hard chrome-plated and polished to 10 RMS finish. Piston rods are made from 90,000 to 100,000 psi minimum yield material in 5/8" through 4" diameters. The piston thread equals the catalog style #2 rod end thread for each rod diameter to assure proper piston-to-rod thread strength. Two wrench flats are provided for rod end attachment.

Rod Seal – The piston rod seal offers maximum sealing performance and efficiency with minimum friction. The highly resilient lips are pressure actuated and wear compensating, giving complete reliability through millions of cycles.

Steel Head – Bored and grooved to provide concentricity for mating parts.

Ports – NPTF ports are standard.

End Seals – Pressure-actuated cylinder body-to-head and cap "O" rings.

Secondary Seal – A Double-Service Wiperseal™ acts as a secondary pressure seal on the extend stroke and cleans the rod on the return stroke.

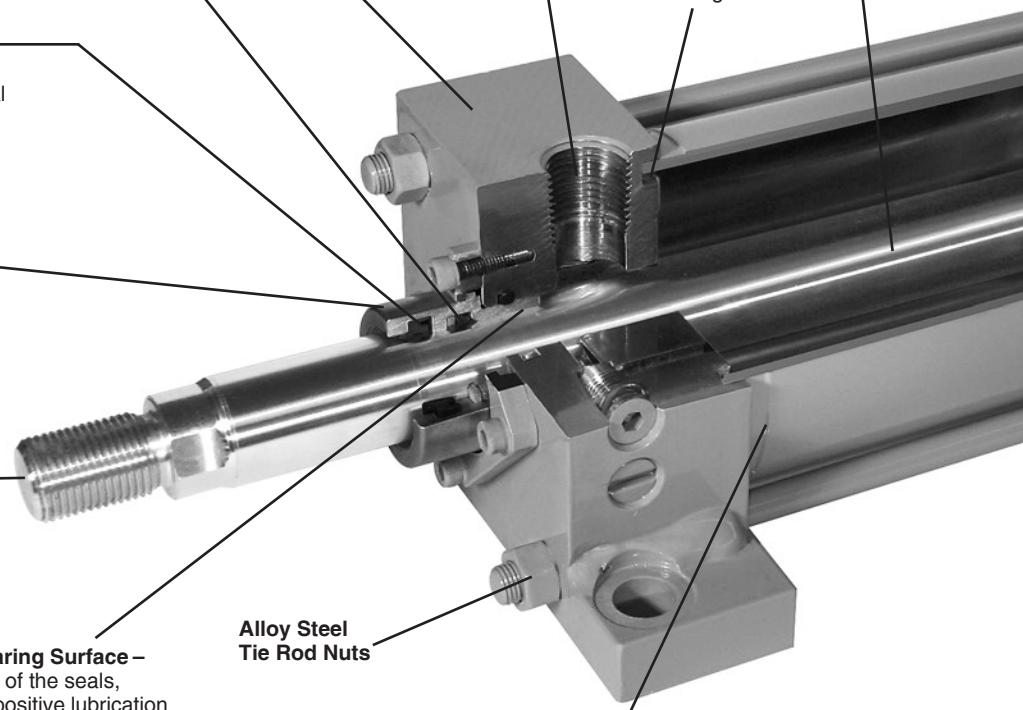

Bolt-On Rod Cartridge – assures true concentricity and allows removal without tie rod disassembly.

Piston Rod Stud – Furnished on 2" diameter rods and smaller when standard style #2 rod end threads are required. Piston rod studs are also available in 2 times the catalog "A" dimension length. Studs have rolled threads and are made from high strength steel. Anaerobic adhesive is used to permanently lock the stud to the piston rod.

Long Bearing Surface – is inboard of the seals, assuring positive lubrication from within the cylinder. An "O" ring is used as a seal between cartridge and head.

Alloy Steel Tie Rod Nuts

Align-A-Groove – A 3/16" wide surface machined at each end of the cylinder body. This makes precise mounting quick and easy.

Adjustable floating cushions

Cushions are optional, and can be supplied at head end, cap end, or both ends without change in envelope or mounting dimensions. Cushions are adjustable.

The PA-2 Series cylinder design incorporates the longest cushion sleeve and cushion spear that can be provided in the standard envelope without decreasing the rod bearing and piston bearing lengths.

(1) When a cushion is specified at the head end:

a. A self-centering sleeve is furnished on the piston rod assembly.

b. A needle valve is provided that is flush with the side of the head when wide open. It may be identified by the fact that it is socket-keyed. Needle valves are located on side number 2, in all mounting styles except MT1, MT2 and MT4. These styles have needle valves located on side number 3.

c. A springless check valve is provided that is also flush with the side of the head and is mounted adjacent to the needle valve except on certain bores of mounting style MS2 where it is mounted opposite the needle valve. The needle valve may be identified by the fact that it is slotted.

d. The check and needle valves are interchangeable in the head.

(2) When a cushion is specified at the cap end:

a. A cushion spear is provided on the piston rod assembly.

b. A "float check" self-centering bushing is provided which incorporates a large flow check valve for fast "out-stroke" action.

c. A socket-keyed needle valve is provided that is flush with the side of the cap when wide open. It is located on side number 2 in all mounting styles except MT1, MT2 and MT4. These styles have needle valves located on side number 3.

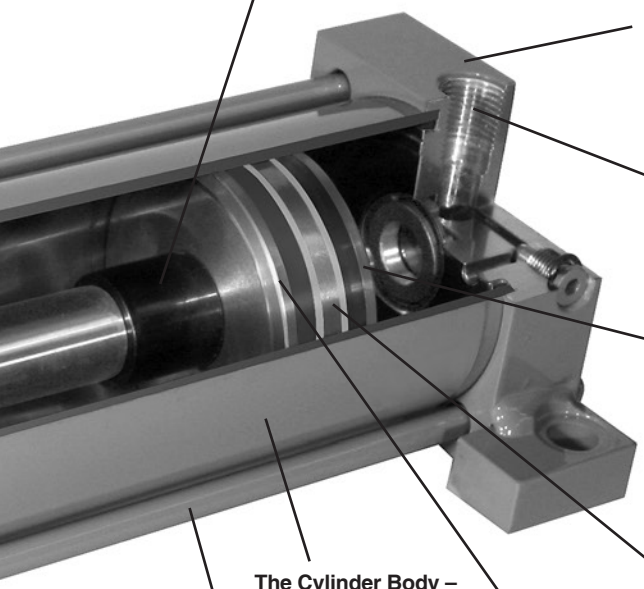

Adjustable Floating Cushions – Cushions are optional and can be supplied at head end, cap end, or both ends without change in envelope or mounting dimensions.

Steel Cap – Bored and grooved to provide concentricity for mating parts.

Ports – NPTF ports are standard.

Piston Lipseal – Fully dynamic and self-compensating for variations in pressure, mechanical deflections and wear.

Wear bands are furnished standard on cylinder bores 8" and larger to ensure long service life.

The Cylinder Body – Hard chrome-plated bore, steel tubing finished to a 15 micro inch finish.

High Strength Tie Rods – Made from 100,000 psi minimum yield steel with rolled threads for added strength.

One-Piece Nodular Iron Piston – The wide piston surface contacting cylinder bore reduces bearing loads. Anaerobic adhesive is used to permanently lock and seal the piston to the rod.

Prelubricated Wearing Surfaces

Schrader Bellows PA-2 Series Air Cylinders are factory prelubricated. Lube-A-Cyl applied to seals, piston, cylinder bore, piston rod and gland surfaces provides lubrication for normal operation.

Lube-A-Cyl has been field and laboratory tested, and is recommended by Schrader Bellows for air cylinders where lubricant should remain in the cylinder and not be expelled into the atmosphere.

Note: Threaded rod glands are supplied on cylinders with rod diameters over 2½".

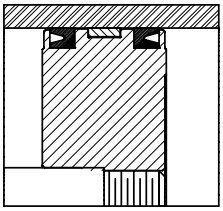

Piston with Wear Band
Standard 8"-14" Bore

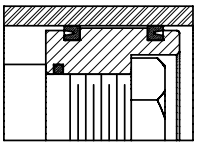

Nut Retained Piston
Optional at extra charge

Cushion Length

Cylinder Bore (Inches)	Rod Diameter* (Inches)	Cushion Length (Inches)	
		Head*	Cap
1½	⅝	⅞	13/16
	1	⅞	13/16
2	⅝	⅞	13/16
	1⅜	⅞	13/16
2½	⅝	⅞	13/16
	1¾	⅞	13/16
3¼	1	1⅛	1
	2	13/16	1
4	1	1⅛	1
	2½	13/16	1
5	1	1⅛	1
	3½	13/16	1

Cylinder Bore (Inches)	Rod Diameter* (Inches)	Cushion Length (Inches)	
		Head*	Cap
6	1⅜	1⅜	1¼
	4	1 1/16	1¼
7	1⅜	1 1/16	1¼
	2	1 1/16	1¼
8	1⅜	1 1/16	1¼
	5½	15/16	1¼
10	1¾	1 5/16	1¾
	5½	1 3/16	1¾
12	2	1 5/16	1¾
	5½	1 3/16	1¾
14	2½	1¾	2
	5½	1 11/16	2

*Head end cushions for rod diameters not listed have cushion lengths with the limits shown.

For cushion selection and sizing, see Section C of this catalog for additional information.

Side Lug Mount

Style MS2
1" - 1 1/2" - 2" - 2 1/2" - 5" and 6" Bore
With Maximum Oversize Rods

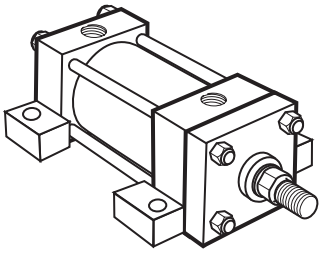

Tie Rod Retained Cartridge

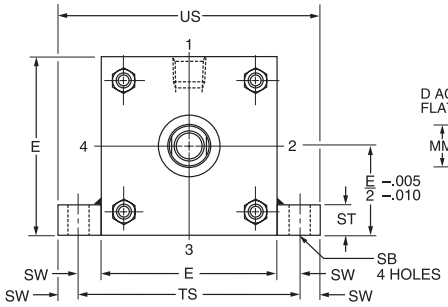

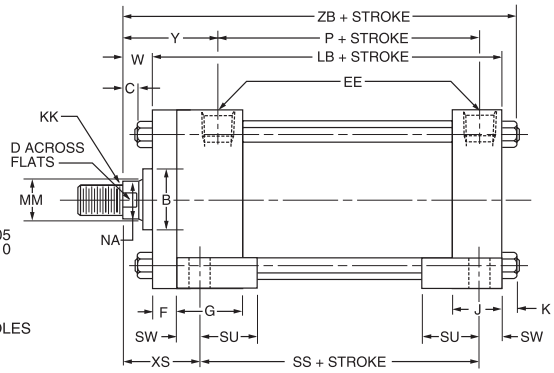

Before determining dimensions: See chart on page 5 for cylinder rod combinations that have removable cartridges.

Side Lug Mount

Style MS2
1 1/2" - 6" Bore

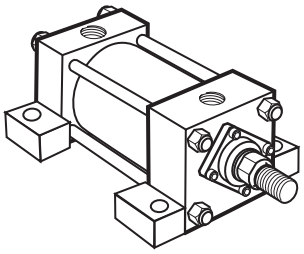

Removable Cartridge

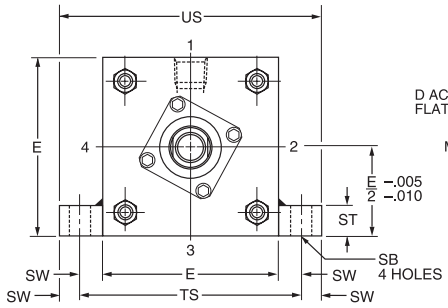

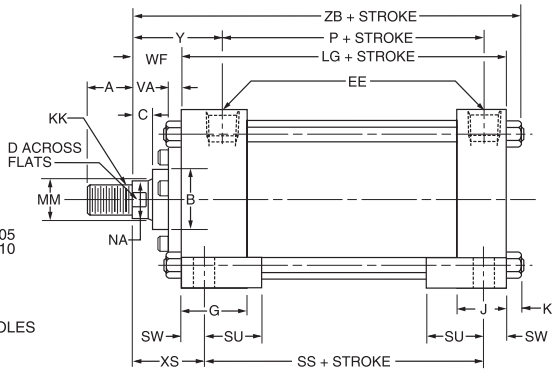

Rod End Dimensions — see table 2

Thread Style 2

Small Male

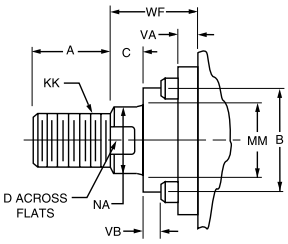

Thread Style 3

Short Female

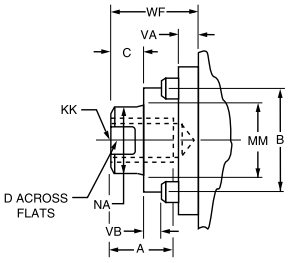

Thread Style 4

Intermediate Male

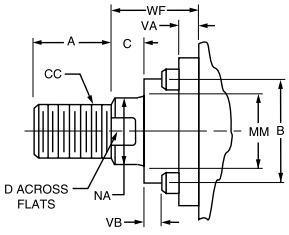

"Special" Thread Style 0

Special thread, extension, rod eye, blank, etc., are also available.

To order, specify "Style 0" and give desired dimensions for KK, A, W or WF. If otherwise special, furnish dimensioned sketch.

A high strength rod end stud is supplied on thread style 2 through 2" diameter rods. Larger sizes or special rod ends are cut threads. Style 2 rod ends are recommended where the workpiece is secured against the rod shoulder. When the workpiece is not shouldered, style 2 rod ends are recommended through 2" piston rod diameters and style 4 rod ends are recommended on larger diameters. Use style 3 for applications where female rod end threads are required. If rod end is not specified, style 2 will be supplied.

Table 1—Envelope and Mounting Dimensions

Bore	E	EE NPTF	F	G	J	K	SB•	ST	SU	SW	TS	US	Add Stroke LB	LG	P	SS
1*	■	1/4	3/8	1 1/2	1	3/16	9/32	5/16	3/4	5/16	2 1/8	2 3/4	3 7/8	3 1/2	2 1/8	2 7/8
1 1/2	2	3/8†	3/8	1 1/2	1	1/4	7/16	1/2	15/16	3/8	2 3/4	3 1/2	4	3 5/8	2 1/4	2 7/8
2	2 1/2	3/8†	3/8	1 1/2	1	5/16	7/16	1/2	15/16	3/8	3 1/4	4	4	3 5/8	2 1/4	2 7/8
2 1/2	3	3/8†	3/8	1 1/2	1	5/16	7/16	1/2	15/16	3/8	3 3/4	4 1/2	4 1/8	3 3/4	2 3/8	3
3 1/4	3 3/4	1/2	–	1 3/4	1 1/4	3/8	9/16	3/4	1 1/4	1/2	4 3/4	5 3/4	4 7/8	4 1/4	2 5/8	3 1/4
4	4 1/2	1/2	–	1 3/4	1 1/4	3/8	9/16	3/4	1 1/4	1/2	5 1/2	6 1/2	4 7/8	4 1/4	2 5/8	3 1/4
5	5 1/2	1/2	5/8	1 3/4	1 1/4	7/16	13/16	1	1 9/16	11/16	6 7/8	8 1/4	5 1/8	4 1/2	2 7/8	3 1/8
6	6 1/2	3/4	3/4	2	1 1/2	7/16	13/16	1	1 9/16	11/16	7 7/8	9 1/4	5 3/4	5	3 1/8	3 5/8

* Cushions not available on 1" bore.
† On 1 1/2", 2" and 2 1/2" bore sizes, the head-end (only) pipe thread is not full depth on cylinders with maximum oversize rods. Minimum of three full threads available.
■ 1" bore head is 1 3/4" x 1 1/2". See page 12, Section A.
• Upper surface spot-faced for socket head screws.

Table 2—Rod Dimensions and Envelope Dimensions Affected by Rod Size

Bore	Rod Dia. MM	Thread Style 4 CC	Thread Style 2 & 3 KK	A	+.000 -.002 B	C	D	NA	V	VA	VB	W	WF	XS	Y	Add Stroke ZB
1*	1/2	7/16-20	5/16-24	5/8	.999	3/8	3/8	7/16	1/4	–	–	5/8	–	1 5/16	1 15/16	4 11/16
	5/8	1/2-20	7/16-20	3/4	1.124	3/8	1/2	9/16	1/4	–	–	5/8	–	1 5/16	1 15/16	4 11/16
1 1/2	5/8	1/2-20	7/16-20	3/4	1.124	3/8	1/2	9/16	–	1/4	3/16	–	1	1 3/8	1 15/16	4 7/8
	1	7/8-14	3/4-16	1 1/8	1.499	1/2	7/8	15/16	1/2	–	–	1	–	1 3/4	2 5/16	5 1/4
2	5/8	1/2-20	7/16-20	3/4	1.124	3/8	1/2	9/16	–	1/4	3/16	–	1	1 3/8	1 15/16	4 15/16
	1 3/8	1 1/4-12	1-14	1 5/8	1.999	5/8	1 1/8	1 5/16	5/8	–	–	1 1/4	–	2	2 9/16	5 9/16
	1	7/8-14	3/4-16	1 1/8	1.499	1/2	7/8	15/16	–	1/4	7/16	–	1 3/8	1 3/4	2 5/16	5 5/16
2 1/2	5/8	1/2-20	7/16-20	3/4	1.124	3/8	1/2	9/16	–	1/4	3/16	–	1	1 3/8	1 15/16	5 1/16
	1 3/4	1 1/2-12	1 1/4-12	2	2.374	3/4	1 1/2	1 11/16	3/4	–	–	1 1/2	–	2 1/4	2 13/16	5 15/16
	1	7/8-14	3/4-16	1 1/8	1.499	1/2	7/8	15/16	–	1/4	7/16	–	1 3/8	1 3/4	2 5/16	5 7/16
	1 3/8	1 1/4-12	1-14	1 5/8	1.999	5/8	1 1/8	1 5/16	5/8	–	–	1 1/4	–	2	2 9/16	5 11/16
3 1/4	1	7/8-14	3/4-16	1 1/8	1.499	1/2	7/8	15/16	–	1/4	7/16	–	1 3/8	1 7/8	2 7/16	6
	2	1 3/4-12	1 1/2-12	2 1/4	2.624	7/8	1 11/16	1 15/16	–	1/4	9/16	–	2	2 1/2	3 1/16	6 5/8
	1 3/8	1 1/4-12	1-14	1 5/8	1.999	5/8	1 1/8	1 5/16	–	1/4	1/2	–	1 5/8	2 1/8	2 11/16	6 1/4
	1 3/4	1 1/2-12	1 1/4-12	2	2.374	3/4	1 1/2	1 11/16	–	1/4	9/16	–	1 7/8	2 3/8	2 15/16	6 1/2
4	1	7/8-14	3/4-16	1 1/8	1.499	1/2	7/8	15/16	–	1/4	7/16	–	1 3/8	1 7/8	2 7/16	6
	2 1/2	2 1/4-12	1 7/8-12	3	3.124	1	2 1/16	2 3/8	–	1/4	11/16	–	2 1/4	2 3/4	3 5/16	6 7/8
	1 3/8	1 1/4-12	1-14	1 5/8	1.999	5/8	1 1/8	1 5/16	–	1/4	1/2	–	1 5/8	2 1/8	2 11/16	6 1/4
	1 3/4	1 1/2-12	1 1/4-12	2	2.374	3/4	1 1/2	1 11/16	–	1/4	9/16	–	1 7/8	2 3/8	2 15/16	6 1/2
	2	1 3/4-12	1 1/2-12	2 1/4	2.624	7/8	1 11/16	1 15/16	–	1/4	9/16	–	2	2 1/2	3 1/16	6 5/8
5	1	7/8-14	3/4-16	1 1/8	1.499	1/2	7/8	15/16	–	1/4	7/16	–	1 3/8	2 1/16	2 7/16	6 5/16
	3 1/2	3 1/4-12	2 1/2-12	3 1/2	4.249	1	3	3 3/8	5/8	–	–	1 5/8	–	2 15/16	3 5/16	7 3/16
	1 3/8	1 1/4-12	1-14	1 5/8	1.999	5/8	1 1/8	1 5/16	–	1/4	1/2	–	1 5/8	2 5/16	2 11/16	6 9/16
	1 3/4	1 1/2-12	1 1/4-12	2	2.374	3/4	1 1/2	1 11/16	–	1/4	9/16	–	1 7/8	2 9/16	2 15/16	6 13/16
	2	1 3/4-12	1 1/2-12	2 1/4	2.624	7/8	1 11/16	1 15/16	–	1/4	9/16	–	2	2 11/16	3 1/16	6 15/16
	2 1/2	2 1/4-12	1 7/8-12	3	3.124	1	2 1/16	2 3/8	–	1/4	11/16	–	2 1/4	2 15/16	3 5/16	7 3/16
	3	2 3/4-12	2 1/4-12	3 1/2	3.749	1	2 5/8	2 7/8	5/8	–	–	1 5/8	–	2 15/16	3 5/16	7 3/16
6	1 3/8	1 1/4-12	1-14	1 5/8	1.999	5/8	1 1/8	1 5/16	–	1/4	7/16	–	1 5/8	2 5/16	2 13/16	7 1/16
	4	3 3/4-12	3-12	4	4.749	1	3 3/8	3 7/8	1/2	–	–	1 1/2	–	2 15/16	3 7/16	7 11/16
	1 3/4	1 1/2-12	1 1/4-12	2	2.374	3/4	1 1/2	1 11/16	–	1/4	9/16	–	1 7/8	2 9/16	3 1/16	7 5/16
	2	1 3/4-12	1 1/2-12	2 1/4	2.624	7/8	1 11/16	1 15/16	–	1/4	9/16	–	2	2 11/16	3 3/16	7 7/16
	2 1/2	2 1/4-12	1 7/8-12	3	3.124	1	2 1/16	2 3/8	–	1/4	11/16	–	2 1/4	2 15/16	3 7/16	7 11/16
	3	2 3/4-12	2 1/4-12	3 1/2	3.749	1	2 5/8	2 7/8	1/2	–	–	1 1/2	–	2 15/16	3 7/16	7 11/16
	3 1/2	3 1/4-12	2 1/2-12	3 1/2	4.249	1	3	3 3/8	1/2	–	–	1 1/2	–	2 15/16	3 7/16	7 11/16

Side Tap Mount
Style MS4
1" - 1 1/2" - 2" - 2 1/2" - 5"
and 6" Bore
With Maximum Oversize Rods

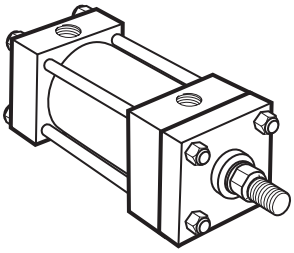

Tie Rod Retained Cartridge

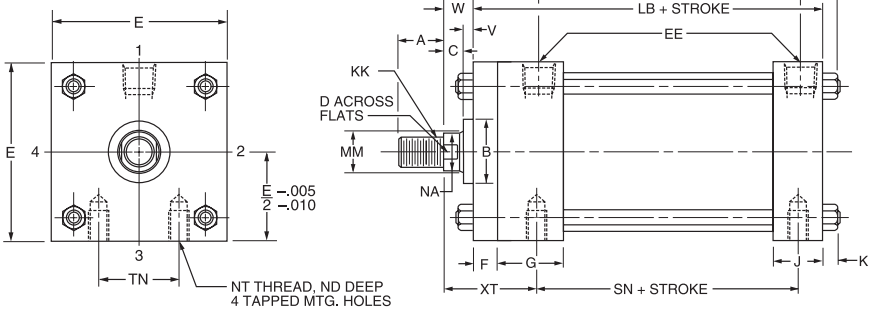

Before determining dimensions: See chart on page 5 for cylinder rod combinations that have removable cartridges.

Side Tap Mount
Style MS4
1 1/2" - 6" Bore

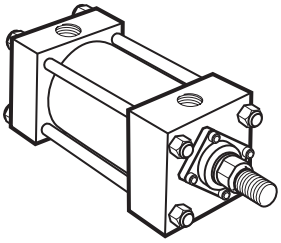

Removable Cartridge

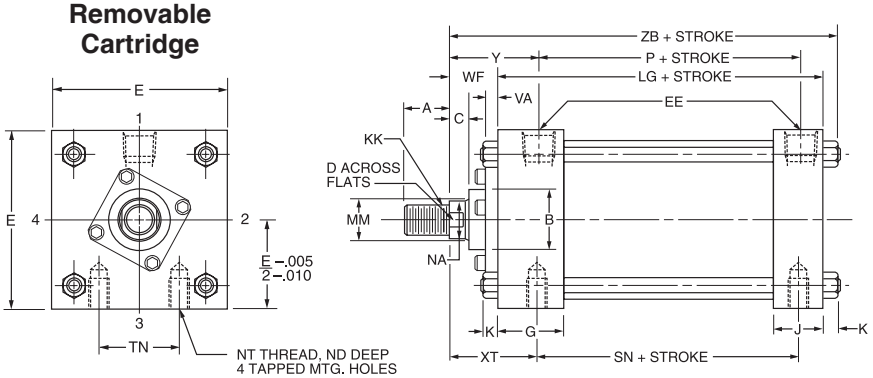

Rod End Dimensions — see table 2

Thread Style 2
Small Male

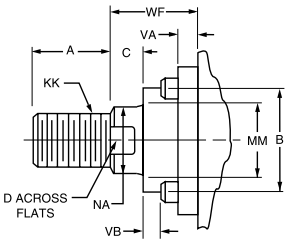

Thread Style 3
Short Female

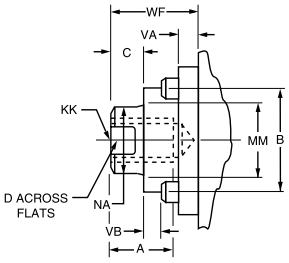

Thread Style 4
Intermediate Male

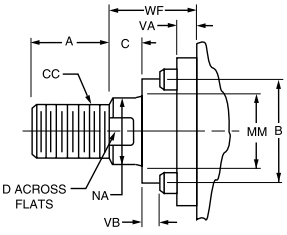

"Special" Thread Style 0

Special thread, extension, rod eye, blank, etc., are also available.

To order, specify "Style 0" and give desired dimensions for KK, A, W or WF. If otherwise special, furnish dimensioned sketch.

A high strength rod end stud is supplied on thread style 2 through 2" diameter rods. Larger sizes or special rod ends are cut threads. Style 2 rod ends are recommended where the workpiece is secured against the rod shoulder. When the workpiece is not shouldered, style 2 rod ends are recommended through 2" piston rod diameters and style 4 rod ends are recommended on larger diameters. Use style 3 for applications where female rod end threads are required. If rod end is not specified, style 2 will be supplied.

Table 1—Envelope and Mounting Dimensions

Bore	E	EE NPTF	F	G	J	K	NT	TN	Add Stroke LB	LG	P	SN
1*	■	1/4	3/8	1 1/2	1	3/16	10-24	9/16	3 7/8	–	2 1/8	2 1/8
1 1/2	2	3/8†	3/8	1 1/2	1	1/4	1/4-20	5/8	4	3 5/8	2 1/4	2 1/4
2	2 1/2	3/8†	3/8	1 1/2	1	5/16	5/16-18	7/8	4	3 5/8	2 1/4	2 1/4
2 1/2	3	3/8†	3/8	1 1/2	1	5/16	3/8-16	1 1/4	4 1/8	3 3/4	2 3/8	2 3/8
3 1/4	3 3/4	1/2	5/8	1 3/4	1 1/4	3/8	1/2-13	1 1/2	4 7/8	4 1/4	2 5/8	2 5/8
4	4 1/2	1/2	5/8	1 3/4	1 1/4	3/8	1/2-13	2 1/16	4 7/8	4 1/4	2 5/8	2 5/8
5	5 1/2	1/2	5/8	1 3/4	1 1/4	7/16	5/8-11	2 11/16	5 1/8	4 1/2	2 7/8	2 7/8
6	6 1/2	3/4	3/4	2	1 1/2	7/16	3/4-10	3 1/4	5 3/4	5	3 1/8	3 1/8

* Cushions not available on 1" bore.

† On 1 1/2", 2" and 2 1/2" bore sizes, the head-end (only) pipe thread is not full depth on cylinders with maximum oversize rods. Minimum of three full threads available.

■ 1" bore head is 1 3/4" x 1 1/2". See page 12, Section A.

Table 2—Rod Dimensions and Envelope Dimensions Affected by Rod Size

Bore	Rod Dia. MM	Thread Style 4 CC	Thread Style 2 & 3 KK	A	+.000 -.002 B	C	D	NA	V	VA	VB	W	WF	XT	Y	ND	Add Stroke ZB
1*	1/2	7/16-20	5/16-24	5/8	.999	3/8	3/8	7/16	1/4	–	–	5/8	–	1 15/16	1 15/16	1/4	4 11/16
	5/8	1/2-20	7/16-20	3/4	1.124	3/8	1/2	9/16	1/4	–	–	5/8	–	1 15/16	1 15/16	1/4	4 11/16
1 1/2	5/8	1/2-20	7/16-20	3/4	1.124	3/8	1/2	9/16	–	1/4	3/16	–	1	1 15/16	1 15/16	5/16	4 7/8
	1	7/8-14	3/4-16	1 1/8	1.499	1/2	7/8	15/16	1/2	–	–	1	–	2 5/16	2 5/16	5/16	5 1/4
2	5/8	1/2-20	7/16-20	3/4	1.124	3/8	1/2	9/16	–	1/4	3/16	–	1	1 15/16	1 13/16	11/32	4 15/16
	1 3/8	1 1/4-12	1-14	1 5/8	1.999	5/8	1 1/8	1 5/16	5/8	–	–	1 1/4	–	2 9/16	2 9/16	11/32	5 9/16
	1	7/8-14	3/4-16	1 1/8	1.499	1/2	7/8	15/16	–	1/4	7/16	–	1 3/8	2 5/16	2 5/16	11/32	5 5/16
2 1/2	5/8	1/2-20	7/16-20	3/4	1.124	3/8	1/2	9/16	–	1/4	3/16	–	1	1 15/16	1 15/16	7/16	5 1/16
	1 3/4	1 1/2-12	1 1/4-12	2	2.374	3/4	1 1/2	1 11/16	3/4	–	–	1 1/2	–	2 13/16	2 13/16	7/16	5 15/16
	1	7/8-14	3/4-16	1 1/8	1.499	1/2	7/8	15/16	–	1/4	7/16	–	1 3/8	2 5/16	2 5/16	7/16	5 7/16
	1 3/8	1 1/4-12	1-14	1 5/8	1.999	5/8	1 1/8	1 5/16	5/8	–	–	1 1/4	–	2 9/16	2 9/16	7/16	5 11/16
3 1/4	1	7/8-14	3/4-16	1 1/8	1.499	1/2	7/8	15/16	–	1/4	7/16	–	1 3/8	2 7/16	2 7/16	1/2	6
	2	1 3/4-12	1 1/2-12	2 1/4	2.624	7/8	1 11/16	1 15/16	–	1/4	9/16	–	2	3 1/16	3 1/16	1/2	6 5/8
	1 3/8	1 1/4-12	1-14	1 5/8	1.999	5/8	1 1/8	1 5/16	–	1/4	1/2	–	1 5/8	2 11/16	2 11/16	1/2	6 1/4
	1 3/4	1 1/2-12	1 1/4-12	2	2.374	3/4	1 1/2	1 11/16	–	1/4	9/16	–	1 7/8	2 15/16	2 15/16	1/2	6 1/2
4	1	7/8-14	3/4-16	1 1/8	1.499	1/2	7/8	15/16	–	1/4	7/16	–	1 3/8	2 7/16	2 7/16	5/8	6
	2 1/2	2 1/4-12	1 7/8-12	3	3.124	1	2 1/16	2 3/8	–	1/4	11/16	–	2 1/4	3 5/16	3 5/16	5/8	6 7/8
	1 3/8	1 1/4-12	1-14	1 5/8	1.999	5/8	1 1/8	1 5/16	–	1/4	1/2	–	1 5/8	2 11/16	2 11/16	5/8	6 1/4
	1 3/4	1 1/2-12	1 1/4-12	2	2.374	3/4	1 1/2	1 11/16	–	1/4	9/16	–	1 7/8	2 15/16	2 15/16	5/8	6 1/2
	2	1 3/4-12	1 1/2-12	2 1/4	2.624	7/8	1 11/16	1 15/16	–	1/4	9/16	–	2	3 1/16	3 1/16	5/8	6 5/8
5	1	7/8-14	3/4-16	1 1/8	1.499	1/2	7/8	15/16	–	1/4	7/16	–	1 3/8	2 7/16	2 7/16	3/4	6 5/16
	3 1/2	3 1/4-12	2 1/2-12	3 1/2	4.249	1	3	3 3/8	5/8	–	–	1 5/8	–	3 5/16	3 5/16	3/4	7 3/16
	1 3/8	1 1/4-12	1-14	1 5/8	1.999	5/8	1 1/8	1 5/16	–	1/4	1/2	–	1 5/8	2 11/16	2 11/16	3/4	6 9/16
	1 3/4	1 1/2-12	1 1/4-12	2	2.374	3/4	1 1/2	1 11/16	–	1/4	9/16	–	1 7/8	2 15/16	2 15/16	3/4	6 13/16
	2	1 3/4-12	1 1/2-12	2 1/4	2.624	7/8	1 11/16	1 15/16	–	1/4	9/16	–	2	3 1/16	3 1/16	3/4	6 15/16
	2 1/2	2 1/4-12	1 7/8-12	3	3.124	1	2 1/16	2 3/8	–	1/4	11/16	–	2 1/4	3 5/16	3 5/16	3/4	7 3/16
	3	2 3/4-12	2 1/4-12	3 1/2	3.749	1	2 5/8	2 7/8	5/8	–	–	1 5/8	–	3 5/16	3 5/16	3/4	7 3/16
6	1 3/8	1 1/4-12	1-14	1 5/8	1.999	5/8	1 1/8	1 5/16	–	1/4	7/16	–	1 5/8	2 13/16	2 13/16	7/8	7 1/16
	4	3 3/4-12	3-12	4	4.749	1	3 3/8	3 7/8	1/2	–	–	1 1/2	–	3 7/16	3 7/16	7/8	7 11/16
	1 3/4	1 1/2-12	1 1/4-12	2	2.374	3/4	1 1/2	1 11/16	–	1/4	9/16	–	1 7/8	3 1/16	3 1/16	7/8	7 5/16
	2	1 3/4-12	1 1/2-12	2 1/4	2.624	7/8	1 11/16	1 15/16	–	1/4	9/16	–	2	3 3/16	3 3/16	7/8	7 7/16
	2 1/2	2 1/4-12	1 7/8-12	3	3.124	1	2 1/16	2 3/8	–	1/4	11/16	–	2 1/4	3 7/16	3 7/16	7/8	7 11/16
	3	2 3/4-12	2 1/4-12	3 1/2	3.749	1	2 5/8	2 7/8	1/2	–	–	1 1/2	–	3 7/16	3 7/16	7/8	7 11/16
	3 1/2	3 1/4-12	2 1/2-12	3 1/2	4.249	1	3	3 3/8	1/2	–	–	1 1/2	–	3 7/16	3 7/16	7/8	7 11/16

Head Rectangular Flange Mount

Style MF1
1" - 6" Bore

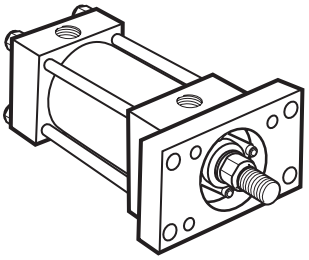

Removable Cartridge

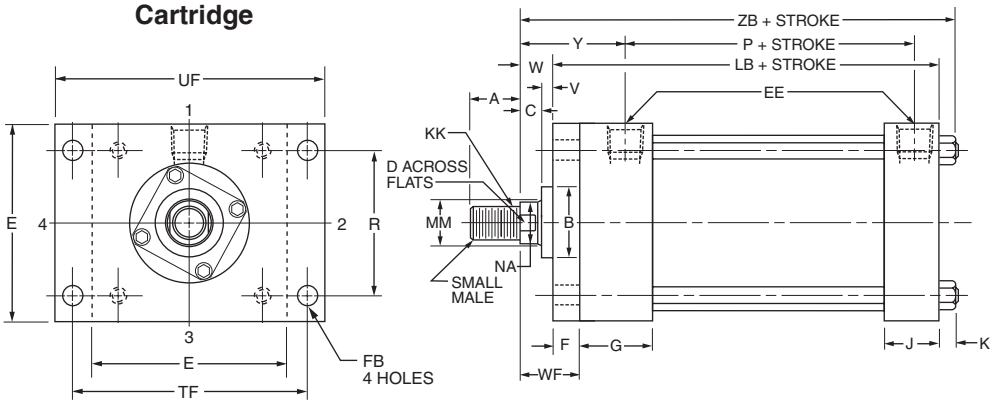

1" Bore Cylinder Only

1" Bore Cylinder Only
Head End

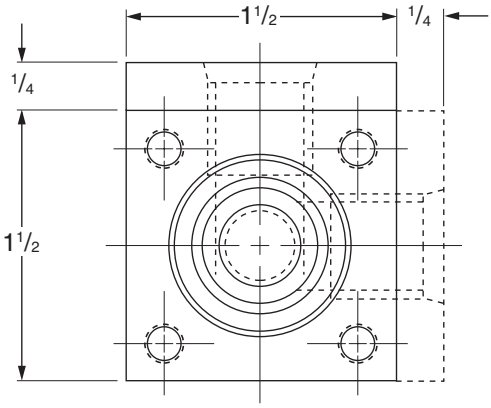

Rod End Dimensions — see table 2

Thread Style 2

Small Male

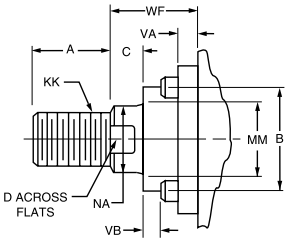

Thread Style 3

Short Female

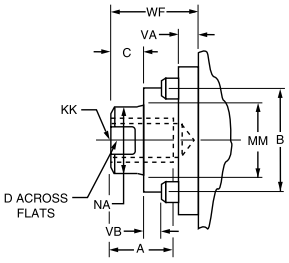

Thread Style 4

Intermediate Male

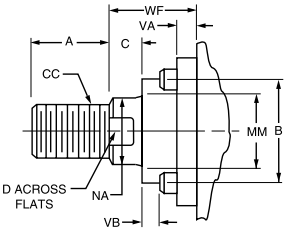

"Special" Thread Style 0

Special thread, extension, rod eye, blank, etc., are also available.

To order, specify "Style 0" and give desired dimensions for KK, A, W or WF. If otherwise special, furnish dimensioned sketch.

A high strength rod end stud is supplied on thread style 2 through 2" diameter rods. Larger sizes or special rod ends are cut threads. Style 2 rod ends are recommended where the workpiece is secured against the rod shoulder. When the workpiece is not shouldered, style 2 rod ends are recommended through 2" piston rod diameters and style 4 rod ends are recommended on larger diameters. Use style 3 for applications where female rod end threads are required. If rod end is not specified, style 2 will be supplied.

Table 1—Envelope and Mounting Dimensions

Bore	E	EE NPTF	F	FB	G	J	K	R	TF	UF	Add Stroke LB	Add Stroke P
1*	■	1/4	3/8	1/4	1 1/2	1	3/16	1.08	2	2 1/2	3 7/8	2 1/8
1 1/2	2	3/8†	3/8	5/16	1 1/2	1	1/4	1.43	2 3/4	3 3/8	4	2 1/4
2	2 1/2	3/8†	3/8	3/8	1 1/2	1	5/16	1.84	3 3/8	4 1/8	4	2 1/4
2 1/2	3	3/8†	3/8	3/8	1 1/2	1	5/16	2.19	3 7/8	4 5/8	4 1/8	2 3/8
3 1/4	3 3/4	1/2	5/8	7/16	1 3/4	1 1/4	3/8	2.76	4 11/16	5 1/2	4 7/8	2 5/8
4	4 1/2	1/2	5/8	7/16	1 3/4	1 1/4	3/8	3.32	5 7/16	6 1/4	4 7/8	2 5/8
5	5 1/2	1/2	5/8	9/16	1 3/4	1 1/4	7/16	4.10	6 5/8	7 5/8	5 1/8	2 7/8
6	6 1/2	3/4	3/4	9/16	2	1 1/2	7/16	4.88	7 5/8	8 5/8	5 3/4	3 1/8

* Cushions not available on 1" bore.

† On 1 1/2", 2" and 2 1/2" bore sizes, the head-end (only) pipe thread is not full depth on cylinders with maximum oversize rods. Minimum of three full threads available.

■ 1" bore head is 1 3/4" x 1 1/2". See page 12, Section A.

Table 2—Rod Dimensions and Envelope Dimensions Affected by Rod Size

Bore	Rod Dia. MM	Thread Style 4 CC	Thread Style 2 & 3 KK	A	+.000 -.002 B	C	D	NA	V	W	WF	Y	Add Stroke ZB
1*	1/2	7/16-20	5/16-24	5/8	.999	3/8	3/8	7/16	1/4	5/8	1	1 15/16	4 11/16
	5/8	1/2-20	7/16-20	3/4	1.124	3/8	1/2	9/16	1/4	5/8	1	1 15/16	4 11/16
1 1/2	5/8	1/2-20	7/16-20	3/4	1.124	3/8	1/2	9/16	1/4	5/8	1	1 15/16	4 7/8
	1	7/8-14	3/4-16	1 1/8	1.499	1/2	7/8	15/16	1/2	1	1 3/8	2 5/16	5 1/4
2	5/8	1/2-20	7/16-20	3/4	1.124	3/8	1/2	9/16	1/4	5/8	1	1 15/16	4 15/16
	1 3/8	1 1/4-12	1-14	1 5/8	1.999	5/8	1 1/8	1 5/16	5/8	1 1/4	1 5/8	2 9/16	5 9/16
	1	7/8-14	3/4-16	1 1/8	1.499	1/2	7/8	15/16	1/2	1	1 3/8	2 5/16	5 5/16
2 1/2	5/8	1/2-20	7/16-20	3/4	1.124	3/8	1/2	9/16	1/4	5/8	1	1 15/16	5 1/16
	1 3/4	1 1/2-12	1 1/4-12	2	2.374	3/4	1 1/2	1 11/16	3/4	1 1/2	1 7/8	2 13/16	5 15/16
	1	7/8-14	3/4-16	1 1/8	1.499	1/2	7/8	15/16	1/2	1	1 3/8	2 5/16	5 7/16
	1 3/8	1 1/4-12	1-14	1 5/8	1.999	5/8	1 1/8	1 5/16	5/8	1 1/4	1 5/8	2 9/16	5 11/16
3 1/4	1	7/8-14	3/4-16	1 1/8	1.499	1/2	7/8	15/16	1/4	3/4	1 3/8	2 7/16	6
	2	1 3/4-12	1 1/2-12	2 1/4	2.624	7/8	1 11/16	1 15/16	1/2	1 3/8	2	3 1/16	6 5/8
	1 3/8	1 1/4-12	1-14	1 5/8	1.999	5/8	1 1/8	1 5/16	3/8	1	1 5/8	2 11/16	6 1/4
	1 3/4	1 1/2-12	1 1/4-12	2	2.374	3/4	1 1/2	1 11/16	1/2	1 1/4	1 7/8	2 15/16	6 1/2
4	1	7/8-14	3/4-16	1 1/8	1.499	1/2	7/8	15/16	1/4	3/4	1 3/8	2 7/16	6
	2 1/2	2 1/4-12	1 7/8-12	3	3.124	1	2 1/16	2 3/8	5/8	1 5/8	2 1/4	3 5/16	6 7/8
	1 3/8	1 1/4-12	1-14	1 5/8	1.999	5/8	1 1/8	1 5/16	3/8	1	1 5/8	2 11/16	6 1/4
	1 3/4	1 1/2-12	1 1/4-12	2	2.374	3/4	1 1/2	1 11/16	1/2	1 1/4	1 7/8	2 15/16	6 1/2
	2	1 3/4-12	1 1/2-12	2 1/4	2.624	7/8	1 11/16	1 15/16	1/2	1 3/8	2	3 1/16	6 5/8
5	1	7/8-14	3/4-16	1 1/8	1.499	1/2	7/8	15/16	1/4	3/4	1 3/8	2 7/16	6 5/16
	3 1/2	3 1/4-12	2 1/2-12	3 1/2	4.249	1	3	3 3/8	5/8	1 5/8	2 1/4	3 5/16	7 3/16
	1 3/8	1 1/4-12	1-14	1 5/8	1.999	5/8	1 1/8	1 5/16	3/8	1	1 5/8	2 11/16	6 9/16
	1 3/4	1 1/2-12	1 1/4-12	2	2.374	3/4	1 1/2	1 11/16	1/2	1 1/4	1 7/8	2 15/16	6 13/16
	2	1 3/4-12	1 1/2-12	2 1/4	2.624	7/8	1 11/16	1 15/16	1/2	1 3/8	2	3 1/16	6 15/16
	2 1/2	2 1/4-12	1 7/8-12	3	3.124	1	2 1/16	2 3/8	5/8	1 5/8	2 1/4	3 5/16	7 3/16
	3	2 3/4-12	2 1/4-12	3 1/2	3.749	1	2 5/8	2 7/8	5/8	1 5/8	2 1/4	3 5/16	7 3/16
6	1 3/8	1 1/4-12	1-14	1 5/8	1.999	5/8	1 1/8	1 5/16	1/4	7/8	1 5/8	2 13/16	7 1/16
	4	3 3/4-12	3-12	4	4.749	1	3 3/8	3 7/8	1/2	1 1/2	2 1/4	3 7/16	7 11/16
	1 3/4	1 1/2-12	1 1/4-12	2	2.374	3/4	1 1/2	1 11/16	3/8	1 1/8	1 7/8	3 1/16	7 5/16
	2	1 3/4-12	1 1/2-12	2 1/4	2.624	7/8	1 11/16	1 15/16	3/8	1 1/4	2	3 3/16	7 7/16
	2 1/2	2 1/4-12	1 7/8-12	3	3.124	1	2 1/16	2 3/8	1/2	1 1/2	2 1/4	3 7/16	7 11/16
	3	2 3/4-12	2 1/4-12	3 1/2	3.749	1	2 5/8	2 7/8	1/2	1 1/2	2 1/4	3 7/16	7 11/16
	3 1/2	3 1/4-12	2 1/2-12	3 1/2	4.249	1	3	3 3/8	1/2	1 1/2	2 1/4	3 7/16	7 11/16

Cap Rectangular Flange Mount

Style MF2
1" - 1 1/2" - 2" - 2 1/2" - 5" and 6" Bore
With Maximum Oversize Rods

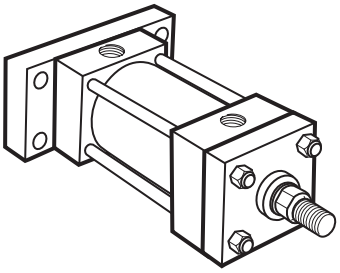

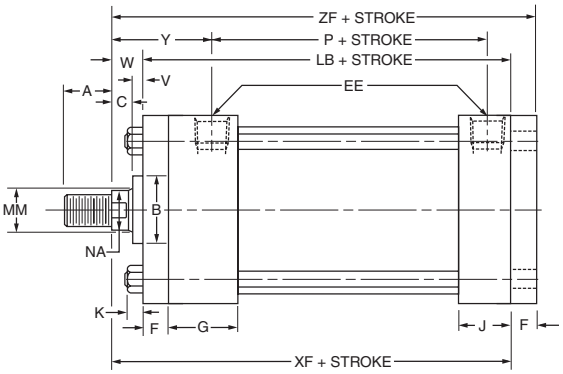

Tie Rod Retained Cartridge

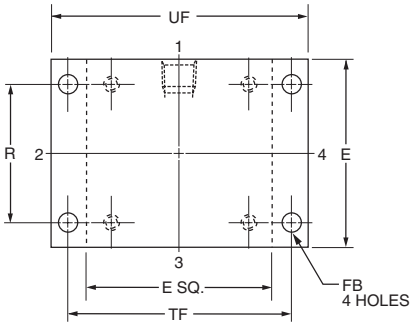

Before determining dimensions: See chart on page 5 for cylinder rod combinations that have removable cartridges.

Cap Rectangular Flange Mount

Style MF2
1 1/2" - 6" Bore

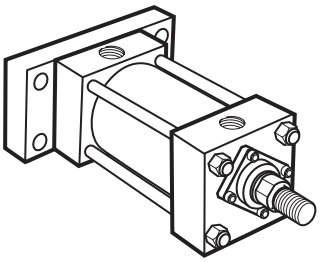

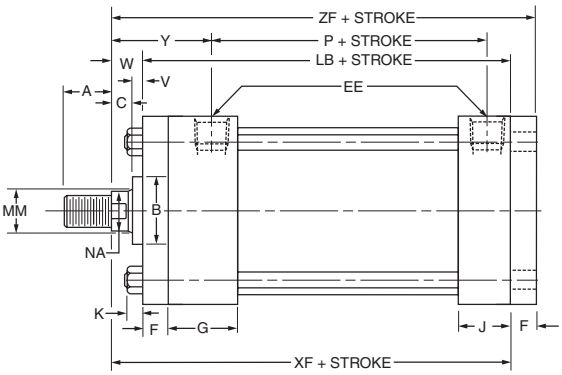

Removable Cartridge

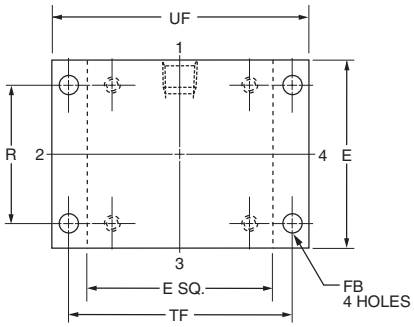

Rod End Dimensions — see table 2

Thread Style 2

Small Male

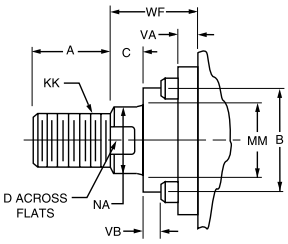

Thread Style 3

Short Female

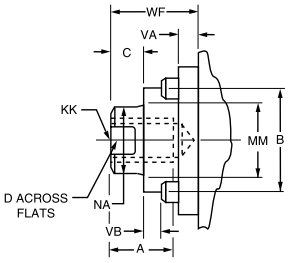

Thread Style 4

Intermediate Male

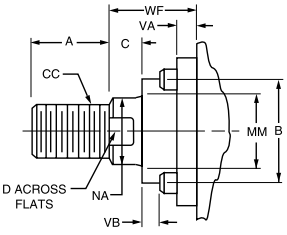

"Special" Thread Style 0

Special thread, extension, rod eye, blank, etc., are also available.

To order, specify "Style 0" and give desired dimensions for KK, A, W or WF. If otherwise special, furnish dimensioned sketch.

A high strength rod end stud is supplied on thread style 2 through 2" diameter rods. Larger sizes or special rod ends are cut threads. Style 2 rod ends are recommended where the workpiece is secured against the rod shoulder. When the workpiece is not shouldered, style 2 rod ends are recommended through 2" piston rod diameters and style 4 rod ends are recommended on larger diameters. Use style 3 for applications where female rod end threads are required. If rod end is not specified, style 2 will be supplied.

Table 1—Envelope and Mounting Dimensions

Bore	E	EE NPTF	F	FB	G	J	K	R	TF	UF	Add Stroke LB	Add Stroke LG	Add Stroke P
1*	■	1/4	3/8	1/4	1 1/2	1	3/16	1.08	2	2 1/2	3 7/8	–	2 1/8
1 1/2	2	3/8†	3/8	5/16	1 1/2	1	1/4	1.43	2 3/4	3 3/8	4	3 5/8	2 1/4
2	2 1/2	3/8†	3/8	3/8	1 1/2	1	5/16	1.84	3 3/8	4 1/8	4	3 5/8	2 1/4
2 1/2	3	3/8†	3/8	3/8	1 1/2	1	5/16	2.19	3 7/8	4 5/8	4 1/8	3 3/4	2 3/8
3 1/4	3 3/4	1/2	5/8	7/16	1 3/4	1 1/4	3/8	2.76	4 11/16	5 1/2	–	4 1/4	2 5/8
4	4 1/2	1/2	5/8	7/16	1 3/4	1 1/4	3/8	3.32	5 7/16	6 1/4	–	4 1/4	2 5/8
5	5 1/2	1/2	5/8	9/16	1 3/4	1 1/4	7/16	4.10	6 5/8	7 5/8	5 1/8	4 1/2	2 7/8
6	6 1/2	3/4	3/4	9/16	2	1 1/2	7/16	4.88	7 5/8	8 5/8	5 3/4	5	3 1/8

* Cushion not available on 1" bore.

† On 1 1/2", 2" and 2 1/2" bore sizes, the head-end (only) pipe thread is not full depth on cylinders with maximum oversize rods. Minimum of three full threads available.

■ 1" bore head is 1 3/4" x 1 1/2". See page 12, Section A.

Table 2—Rod Dimensions and Envelope Dimensions Affected by Rod Size

Bore	Rod Dia. MM	Thread Style 4 CC	Thread Style 2 & 3 KK	A	+.000 -.002 B	C	D	NA	V	VA	VB	W	WF	Y	Add Stroke XF	Add Stroke ZF
1	1/2	7/16-20	5/16-24	5/8	.999	3/8	3/8	7/16	1/4	–	–	5/8	–	1 15/16	4 1/2	4 7/8
	5/8	1/2-20	7/16-20	3/4	1.124	3/8	1/2	9/16	1/4	–	–	5/8	–	1 15/16	4 1/2	4 7/8
1 1/2	5/8	1/2-20	7/16-20	3/4	1.124	3/8	1/2	9/16	–	1/4	3/16	–	1	1 15/16	4 5/8	5
	1	7/8-14	3/4-16	1 1/8	1.499	1/2	7/8	15/16	1/2	–	–	1	–	2 5/16	5	5 3/8
2	5/8	1/2-20	7/16-20	3/4	1.124	3/8	1/2	9/16	–	1/4	3/16	–	1	1 15/16	4 5/8	5
	1 3/8	1 1/4-12	1-14	1 5/8	1.999	5/8	1 1/8	1 5/16	5/8	–	–	1 1/4	–	2 9/16	5 1/4	5 5/8
	1	7/8-14	3/4-16	1 1/8	1.499	1/2	7/8	15/16	–	1/4	7/16	–	1 3/8	2 5/16	5	5 3/8
2 1/2	5/8	1/2-20	7/16-20	3/4	1.124	3/8	1/2	9/16	–	1/4	3/16	–	1	1 15/16	4 3/4	5 1/8
	1 3/4	1 1/2-12	1 1/4-12	2	2.374	3/4	1 1/2	1 11/16	3/4	–	–	1 1/2	–	2 13/16	5 5/8	6
	1	7/8-14	3/4-16	1 1/8	1.499	1/2	7/8	15/16	–	1/4	7/16	–	1 3/8	2 5/16	5 1/8	5 1/2
	1 3/8	1 1/4-12	1-14	1 5/8	1.999	5/8	1 1/8	1 5/16	5/8	–	–	1 1/4	–	2 9/16	5 3/8	5 3/4
3 1/4	1	7/8-14	3/4-16	1 1/8	1.499	1/2	7/8	15/16	–	1/4	7/16	–	1 3/8	2 7/16	5 5/8	6 1/4
	2	1 3/4-12	1 1/2-12	2 1/4	2.624	7/8	1 11/16	1 15/16	–	1/4	9/16	–	2	3 1/16	6 1/4	6 7/8
	1 3/8	1 1/4-12	1-14	1 5/8	1.999	5/8	1 1/8	1 5/16	–	1/4	1/2	–	1 5/8	2 11/16	5 7/8	6 1/2
	1 3/4	1 1/2-12	1 1/4-12	2	2.374	3/4	1 1/2	1 11/16	–	1/4	9/16	–	1 7/8	2 15/16	6 1/8	6 3/4
4	1	7/8-14	3/4-16	1 1/8	1.499	1/2	7/8	15/16	–	1/4	7/16	–	1 3/8	2 7/16	5 5/8	6 1/4
	2 1/2	2 1/4-12	1 7/8-12	3	3.124	1	2 1/16	2 3/8	–	1/4	11/16	–	2 1/4	3 5/16	6 1/2	7 1/8
	1 3/8	1 1/4-12	1-14	1 5/8	1.999	5/8	1 1/8	1 5/16	–	1/4	1/2	–	1 5/8	2 11/16	5 7/8	6 1/2
	1 3/4	1 1/2-12	1 1/4-12	2	2.374	3/4	1 1/2	1 11/16	–	1/4	9/16	–	1 7/8	2 15/16	6 1/8	6 3/4
	2	1 3/4-12	1 1/2-12	2 1/4	2.624	7/8	1 11/16	1 15/16	–	1/4	9/16	–	2	3 1/16	6 1/4	6 7/8
5	1	7/8-14	3/4-16	1 1/8	1.499	1/2	7/8	15/16	–	1/4	7/16	–	1 3/8	2 7/16	5 7/8	6 1/2
	3 1/2	3 1/4-12	2 1/2-12	3 1/2	4.249	1	3	3 3/8	5/8	–	–	1 5/8	–	3 5/16	6 3/4	7 3/8
	1 3/8	1 1/4-12	1-14	1 5/8	1.999	5/8	1 1/8	1 5/16	–	1/4	1/2	–	1 5/8	2 11/16	6 1/8	6 3/4
	1 3/4	1 1/2-12	1 1/4-12	2	2.374	3/4	1 1/2	1 11/16	–	1/4	9/16	–	1 7/8	2 15/16	6 3/8	7
	2	1 3/4-12	1 1/2-12	2 1/4	2.624	7/8	1 11/16	1 15/16	–	1/4	9/16	–	2	3 1/16	6 1/2	7 1/8
	2 1/2	2 1/4-12	1 7/8-12	3	3.124	1	2 1/16	2 3/8	–	1/4	11/16	–	2 1/4	3 5/16	6 3/4	7 3/8
	3	2 3/4-12	2 1/4-12	3 1/2	3.749	1	2 5/8	2 7/8	5/8	–	–	1 5/8	–	3 5/16	6 3/4	7 3/8
6	1 3/8	1 1/4-12	1-14	1 5/8	1.999	5/8	1 1/8	1 5/16	–	1/4	7/16	–	1 5/8	2 13/16	6 5/8	7 3/8
	4	3 3/4-12	3-12	4	4.749	1	3 3/8	3 7/8	1/2	–	–	1 1/2	–	3 7/16	7 1/4	8
	1 3/4	1 1/2-12	1 1/4-12	2	2.374	3/4	1 1/2	1 11/16	–	1/4	9/16	–	1 7/8	3 1/16	6 7/8	7 5/8
	2	1 3/4-12	1 1/2-12	2 1/4	2.624	7/8	1 11/16	1 15/16	–	1/4	9/16	–	2	3 3/16	7	7 3/4
	2 1/2	2 1/4-12	1 7/8-12	3	3.124	1	2 1/16	2 3/8	–	1/4	11/16	–	2 1/4	3 7/16	7 1/4	8
	3	2 3/4-12	2 1/4-12	3 1/2	3.749	1	2 5/8	2 7/8	1/2	–	–	1 1/2	–	3 7/16	7 1/4	8
	3 1/2	3 1/4-12	2 1/2-12	3 1/2	4.249	1	3	3 3/8	1/2	–	–	1 1/2	–	3 7/16	7 1/4	8

Head Square Flange Mount
Style MF5
1" - 6" Bore

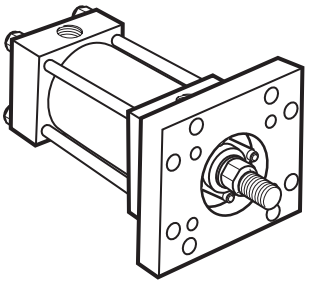

Removable Cartridge

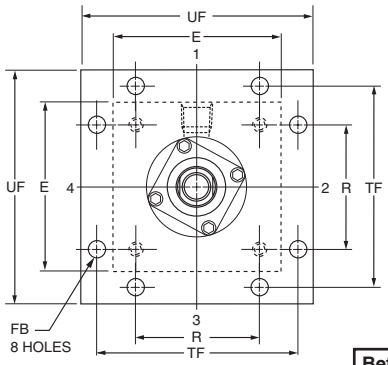

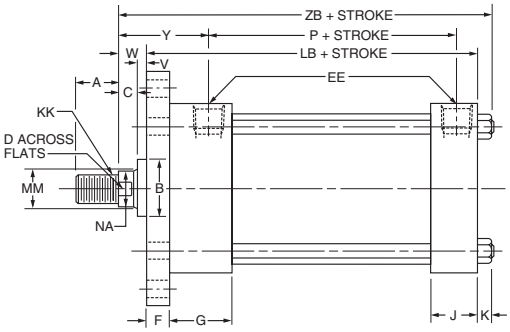

Before determining dimensions: See chart on page 5 for cylinder rod combinations that have removable cartridges.

Cap Square Flange Mount
Style MF6
1" - 1 1/2" - 2" - 2 1/2" - 5" and 6" Bore
With Maximum Oversize Rods

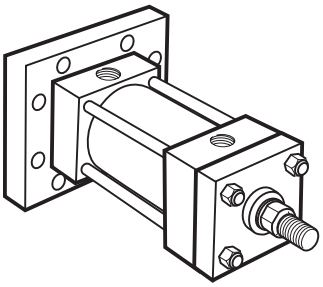

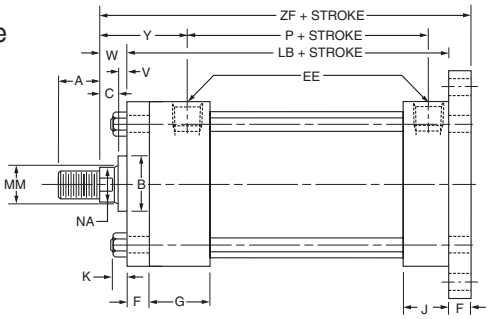

Tie Rod Retained Cartridge

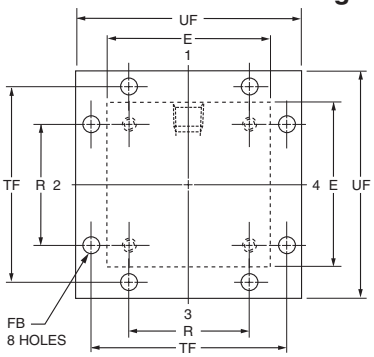

Cap Square Flange Mount
Style MF6
1 1/2" - 6" Bore

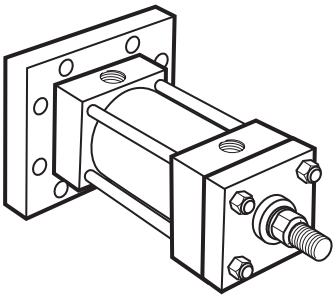

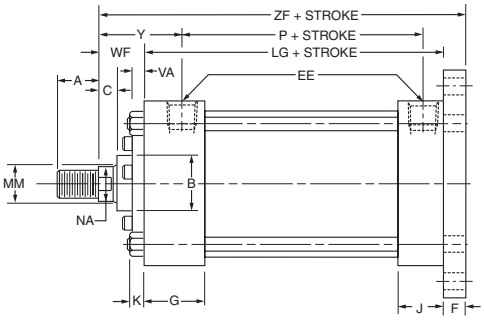

Removable Cartridge

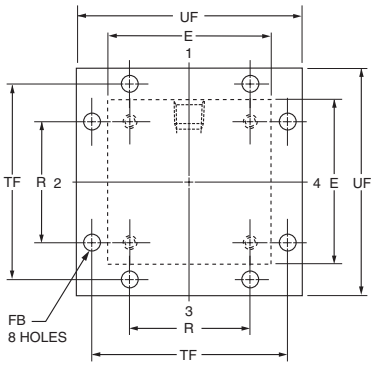

Rod End Dimensions — see table 2

Thread Style 2
Small Male

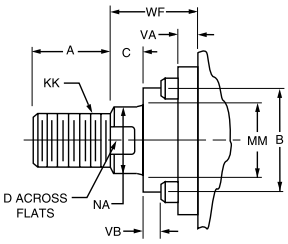

Thread Style 3
Short Female

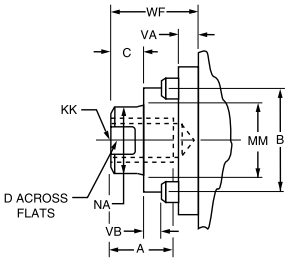

Thread Style 4
Intermediate Male

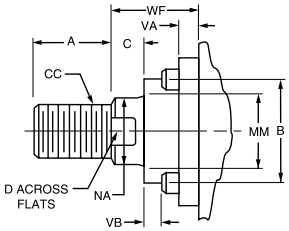

"Special" Thread Style 0
Special thread, extension, rod eye, blank, etc., are also available.

To order, specify "Style 0" and give desired dimensions for KK, A, W or WF. If otherwise special, furnish dimensioned sketch.

A high strength rod end stud is supplied on thread style 2 through 2" diameter rods. Larger sizes or special rod ends are cut threads. Style 2 rod ends are recommended where the workpiece is secured against the rod shoulder. When the workpiece is not shouldered, style 2 rod ends are recommended through 2" piston rod diameters and style 4 rod ends are recommended on larger diameters. Use style 3 for applications where female rod end threads are required. If rod end is not specified, style 2 will be supplied.

Table 1—Envelope and Mounting Dimensions

Bore	E	EE NPTF	F	FB	G	J	K	R	TF	UF	Add Stroke LB	LG	P
1*	■	1/4	3/8	1/4	1 1/2	1	3/16	1.08	2	2 1/2	3 7/8	–	2 1/8
1 1/2	2	3/8†	3/8	5/16	1 1/2	1	1/4	1.43	2 3/4	3 3/8	4	3 5/8	2 1/4
2	2 1/2	3/8†	3/8	3/8	1 1/2	1	5/16	1.84	3 3/8	4 1/8	4	3 5/8	2 1/4
2 1/2	3	3/8†	3/8	3/8	1 1/2	1	5/16	2.19	3 7/8	4 5/8	4 1/8	3 3/4	2 3/8
3 1/4	3 3/4	1/2	5/8	7/16	1 3/4	1 1/4	3/8	2.76	4 11/16	5 1/2	4 7/8	4 1/4	2 5/8
4	4 1/2	1/2	5/8	7/16	1 3/4	1 1/4	3/8	3.32	5 7/16	6 1/4	4 7/8	4 1/4	2 5/8
5	5 1/2	1/2	5/8	9/16	1 3/4	1 1/4	7/16	4.10	6 5/8	7 5/8	5 1/8	4 1/2	2 7/8
6	6 1/2	3/4	3/4	9/16	2	1 1/2	7/16	4.88	7 5/8	8 5/8	5 3/4	5	3 1/8

* Cushion not available on 1" bore.

† On 1 1/2", 2" and 2 1/2" bore sizes, the head-end (only) pipe thread is not full depth on cylinders with maximum oversize rods. Minimum of three full threads available.

■ 1" bore head is 1 3/4" x 1 1/2". See page 12, Section A.

Table 2—Rod End Dimensions and Envelope Dimensions Affected By Rod Size

Bore	Rod Dia. MM	Thread Style 4 CC	Thread Style 2 & 3 KK	A	+.000 -.002 B	C	D	NA	V	VA	VB	W	WF	Y	Add Stroke ZB	ZF
1	1/2	7/16-20	5/16-24	5/8	.999	3/8	3/8	7/16	1/4	–	–	5/8	–	1 15/16	4 11/16	4 7/8
	5/8	1/2-20	7/16-20	3/4	1.124	3/8	1/2	9/16	1/4	–	–	5/8	–	1 15/16	4 11/16	4 7/8
1 1/2	5/8	1/2-20	7/16-20	3/4	1.124	3/8	1/2	9/16	1/4**	1/4	3/16	1/4	1	1 15/16	4 7/8	5
	1	7/8-14	3/4-16	1 1/8	1.499	1/2	7/8	15/16	1/2	–	–	1	–	2 5/16	5 1/4	5 3/8
2	5/8	1/2-20	7/16-20	3/4	1.124	3/8	1/2	9/16	1/4**	1/4	3/16	5/8	1	1 15/16	4 15/16	5
	1 3/8	1 1/4-12	1-14	1 5/8	1.999	5/8	1 1/8	1 5/16	5/8	–	–	1 1/4	–	2 9/16	5 9/16	5 5/8
	1	7/8-14	3/4-16	1 1/8	1.499	1/2	7/8	15/16	1/2**	1/4	7/16	1	1 3/8	2 5/16	5 5/16	5 3/8
2 1/2	5/8	1/2-20	7/16-20	3/4	1.124	3/8	1/2	9/16	1/4**	1/4	3/16	5/8	1	1 15/16	5 1/16	5 1/8
	1 3/4	1 1/2-12	1 1/4-12	2	2.374	3/4	1 1/2	1 11/16	3/4	–	–	1 1/2	–	2 13/16	5 15/16	6
	1	7/8-14	3/4-16	1 1/8	1.499	1/2	7/8	15/16	1/2**	1/4	7/16	1	1 3/8	2 5/16	5 7/16	5 1/2
	1 3/8	1 1/4-12	1-14	1 5/8	1.999	5/8	1 1/8	1 5/16	5/8	–	–	1 1/4	–	2 9/16	5 11/16	5 3/4
3 1/4	1	7/8-14	3/4-16	1 1/8	1.499	1/2	7/8	15/16	1/4**	1/4	7/16	3/4	1 3/8	2 7/16	6	6 1/4
	2	1 3/4-12	1 1/2-12	2 1/4	2.624	7/8	1 11/16	1 15/16	1/2**	1/4	9/16	1 3/8	2	3 1/16	6 5/8	6 7/8
	1 3/8	1 1/4-12	1-14	1 5/8	1.999	5/8	1 1/8	1 5/16	3/8**	1/4	1/2	1	1 5/8	2 11/16	6 1/4	6 1/2
	1 3/4	1 1/2-12	1 1/4-12	2	2.374	3/4	1 1/2	1 11/16	1/2**	1/4	9/16	1 1/4	1 7/8	2 15/16	6 1/2	6 3/4
4	1	7/8-14	3/4-16	1 1/8	1.499	1/2	7/8	15/16	1/4**	1/4	7/16	3/4	1 3/8	2 7/16	6	6 1/4
	2 1/2	2 1/4-12	1 7/8-12	3	3.124	1	2 1/16	2 3/8	5/8**	1/4	11/16	1 5/8	2 1/4	3 5/16	6 7/8	7 1/8
	1 3/8	1 1/4-12	1-14	1 5/8	1.999	5/8	1 1/8	1 5/16	3/8**	1/4	1/2	1	1 5/8	2 11/16	6 1/4	6 1/2
	1 3/4	1 1/2-12	1 1/4-12	2	2.374	3/4	1 1/2	1 11/16	1/2**	1/4	9/16	1 1/4	1 7/8	2 15/16	6 1/2	6 3/4
	2	1 3/4-12	1 1/2-12	2 1/4	2.624	7/8	1 11/16	1 15/16	1/2**	1/4	9/16	1 3/8	2	3 1/16	6 5/8	6 7/8
5	1	7/8-14	3/4-16	1 1/8	1.499	1/2	7/8	15/16	1/4**	1/4	7/16	3/4	1 3/8	2 7/16	6 5/16	6 1/2
	3 1/2	3 1/4-12	2 1/2-12	3 1/2	4.249	1	3	3 3/8	5/8	–	–	1 5/8	–	3 5/16	7 3/16	7 3/8
	1 3/8	1 1/4-12	1-14	1 5/8	1.999	5/8	1 1/8	1 5/16	3/8**	1/4	1/2	1	1 5/8	2 11/16	6 9/16	6 3/4
	1 3/4	1 1/2-12	1 1/4-12	2	2.374	3/4	1 1/2	1 11/16	1/2**	1/4	9/16	1 1/4	1 7/8	2 15/16	6 13/16	7
	2	1 3/4-12	1 1/2-12	2 1/4	2.624	7/8	1 11/16	1 15/16	1/2**	1/4	9/16	1 3/8	2	3 1/16	6 15/16	7 1/8
	2 1/2	2 1/4-12	1 7/8-12	3	3.124	1	2 1/16	2 3/8	5/8**	1/4	11/16	1 5/8	2 1/4	3 5/16	7 3/16	7 3/8
	3	2 3/4-12	2 1/4-12	3 1/2	3.749	1	2 5/8	2 7/8	5/8	–	–	1 5/8	–	3 5/16	7 3/16	7 3/8
6	1 3/8	1 1/4-12	1-14	1 5/8	1.999	5/8	1 1/8	1 5/16	1/4	1/4	7/16	7/8	1 5/8	2 13/16	7 1/16	7 3/8
	4	3 3/4-12	3-12	4	4.749	1	3 3/8	3 7/8	3/8	–	–	1 1/2	–	3 7/16	7 11/16	8
	1 3/4	1 1/2-12	1 1/4-12	2	2.374	3/4	1 1/2	1 11/16	3/8**	1/4	9/16	1 1/8	1 7/8	3 1/16	7 5/16	7 5/8
	2	1 3/4-12	1 1/2-12	2 1/4	2.624	7/8	1 11/16	1 15/16	3/8**	1/4	9/16	1 1/4	2	3 3/16	7 7/16	7 3/4
	2 1/2	2 1/4-12	1 7/8-12	3	3.124	1	2 1/16	2 3/8	1/2**	1/4	11/16	1 1/2	2 1/4	3 7/16	7 11/16	8
	3	2 3/4-12	2 1/4-12	3 1/2	3.749	1	2 5/8	2 7/8	1/2	–	–	1 1/2	–	3 7/16	7 11/16	8
	3 1/2	3 1/4-12	2 1/2-12	3 1/2	4.249	1	3	3 3/8	1/2	–	–	1 1/2	–	3 7/16	7 11/16	8

** For all MF5 mounts and MF6 mounts with maximum oversized rods.

Tie Rods Extended Mount

Style MX1
1" - 1 1/2" - 2" - 2 1/2" - 5" and 6" Bore
With Maximum Oversize Rods

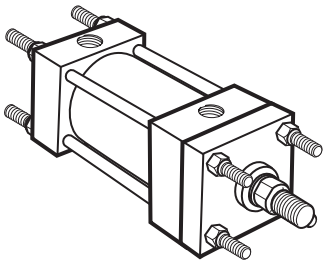

Tie Rod Retained Cartridge

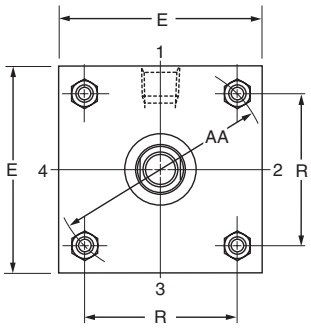

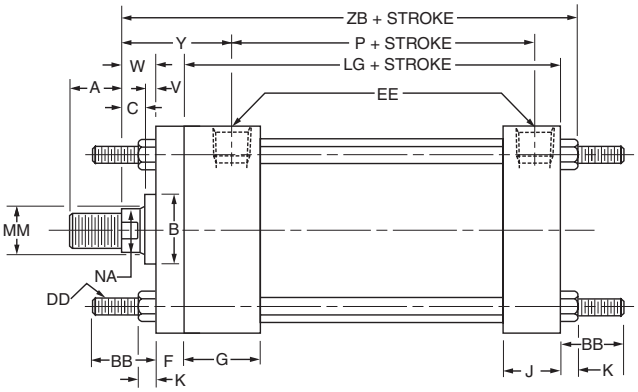

Tie Rods can be extended: Both Ends — Model MX1; Cap End — Model MX2; Head End — Model MX3.

Before determining dimensions: See chart on page 5 for cylinder rod combinations that have removable cartridges.

Tie Rods Extended Mount

Style MX1
1 1/2" - 6" Bore

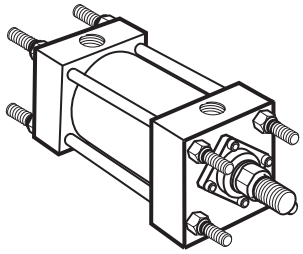

Removable Cartridge

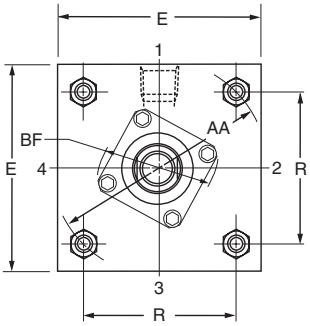

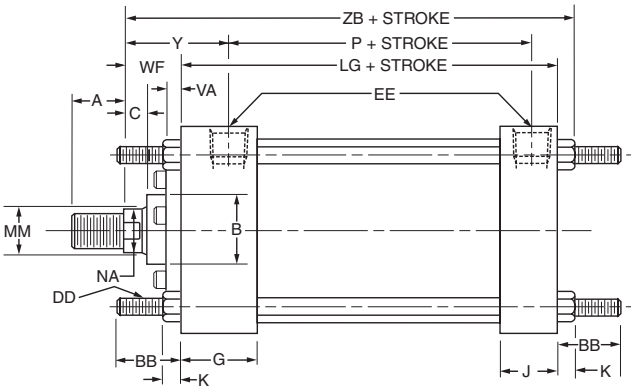

Rod End Dimensions — see table 2

Thread Style 2

Small Male

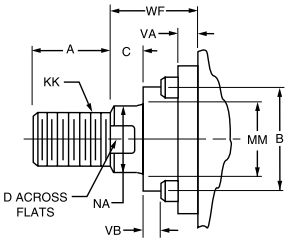

Thread Style 3

Short Female

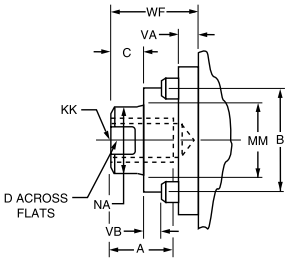

Thread Style 4

Intermediate Male

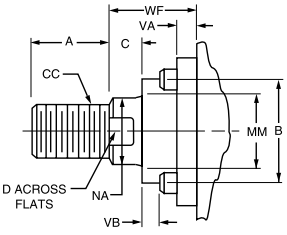

"Special" Thread Style 0

Special thread, extension, rod eye, blank, etc., are also available.

To order, specify "Style 0" and give desired dimensions for KK, A, W or WF. If otherwise special, furnish dimensioned sketch.

A high strength rod end stud is supplied on thread style 2 through 2" diameter rods. Larger sizes or special rod ends are cut threads. Style 2 rod ends are recommended where the workpiece is secured against the rod shoulder. When the workpiece is not shouldered, style 2 rod ends are recommended through 2" piston rod diameters and style 4 rod ends are recommended on larger diameters. Use style 3 for applications where female rod end threads are required. If rod end is not specified, style 2 will be supplied.

Table 1—Envelope and Mounting Dimensions

Bore	AA	BB	DD	E	EE NPTF	F	G	J	K	R	Add Stroke LG	Add Stroke P
1*	1.53	3/4	10-24	■	1/4	3/8	1 1/2	1	3/16	1.08	3 1/2	2 1/8
1 1/2	2.02	1	1/4-28	2	3/8†	3/8	1 1/2	1	1/4	1.43	3 5/8	2 1/4
2	2.6	1 1/8	5/16-24	2 1/2	3/8†	3/8	1 1/2	1	5/16	1.84	3 5/8	2 1/4
2 1/2	3.1	1 1/8	5/16-24	3	3/8†	3/8	1 1/2	1	5/16	2.19	3 3/4	2 3/8
3 1/4	3.9	1 3/8	3/8-24	3 3/4	1/2	–	1 3/4	1 1/4	3/8	2.76	4 1/4	2 5/8
4	4.7	1 3/8	3/8-24	4 1/2	1/2	–	1 3/4	1 1/4	3/8	3.32	4 1/4	2 5/8
5	5.8	1 13/16	1/2-20	5 1/2	1/2	5/8	1 3/4	1 1/4	7/16	4.10	4 1/2	2 7/8
6	6.9	1 13/16	1/2-20	6 1/2	3/4	3/4	2	1 1/2	7/16	4.88	5	3 1/8

* Cushion not available on 1" bore.

† On 1 1/2", 2" and 2 1/2" bore sizes, the head-end (only) pipe thread is not full depth on cylinders with maximum oversize rods. Minimum of three full threads available.

■ 1" bore head is 1 3/4" x 1 1/2". See page 12, Section A.

Table 2—Rod End Dimensions and Envelope Dimensions Affected By Rod Size

Bore	Rod Dia. MM	Thread Style 4 CC	Thread Style 2 & 3 KK	A	+.000 -.002 B	BF	C	D	NA	V	VA	VB	W	WF	Y	Add Stroke ZB
1	1/2	7/16-20	5/16-24	5/8	.999	–	3/8	3/8	7/16	1/4	–	–	5/8	–	1 15/16	4 11/16
	5/8	1/2-20	7/16-20	3/4	1.124	–	3/8	1/2	9/16	1/4	–	–	5/8	–	1 15/16	4 11/16
1 1/2	5/8	1/2-20	7/16-20	3/4	1.124	1.968	3/8	1/2	9/16	–	1/4	3/16	–	1	1 15/16	4 7/8
	1	7/8-14	3/4-16	1 1/8	1.499	–	1/2	7/8	15/16	1/2	–	–	1	–	2 5/16	5 1/4
2	5/8	1/2-20	7/16-20	3/4	1.124	1.968	3/8	1/2	9/16	–	1/4	3/16	–	1	1 15/16	4 15/16
	1 3/8	1 1/4-12	1-14	1 5/8	1.999	–	5/8	1 1/8	1 5/16	5/8	–	–	1 1/4	–	2 9/16	5 9/16
	1	7/8-14	3/4-16	1 1/8	1.499	2.468	1/2	7/8	15/16	–	1/4	7/16	–	1 3/8	2 5/16	5 5/16
2 1/2	5/8	1/2-20	7/16-20	3/4	1.124	1.968	3/8	1/2	9/16	–	1/4	3/16	–	1	1 15/16	5 1/16
	1 3/4	1 1/2-12	1 1/4-12	2	2.374	–	3/4	1 1/2	1 11/16	3/4	–	–	1 1/2	–	2 13/16	5 15/16
	1	7/8-14	3/4-16	1 1/8	1.499	2.468	1/2	7/8	15/16	–	1/4	7/16	–	1 3/8	2 5/16	5 7/16
	1 3/8	1 1/4-12	1-14	1 5/8	1.999	–	5/8	1 1/8	1 5/16	5/8	–	–	1 1/4	–	2 9/16	5 11/16
3 1/4	1	7/8-14	3/4-16	1 1/8	1.499	2.468	1/2	7/8	15/16	–	1/4	7/16	–	1 3/8	2 7/16	6
	2	1 3/4-12	1 1/2-12	2 1/4	2.624	3.735	7/8	1 11/16	1 15/16	–	1/4	9/16	–	2	3 1/16	6 5/8
	1 3/8	1 1/4-12	1-14	1 5/8	1.999	2.968	5/8	1 1/8	1 5/16	–	1/4	1/2	–	1 5/8	2 11/16	6 1/4
	1 3/4	1 1/2-12	1 1/4-12	2	2.374	3.735	3/4	1 1/2	1 11/16	–	1/4	9/16	–	1 7/8	2 15/16	6 1/2
4	1	7/8-14	3/4-16	1 1/8	1.499	2.468	1/2	7/8	15/16	–	1/4	7/16	–	1 3/8	2 7/16	6
	2 1/2	2 1/4-12	1 7/8-12	3	3.124	4.312	1	2 1/16	2 3/8	–	1/4	11/16	–	2 1/4	3 5/16	6 7/8
	1 3/8	1 1/4-12	1-14	1 5/8	1.999	2.968	5/8	1 1/8	1 5/16	–	1/4	1/2	–	1 5/8	2 11/16	6 1/4
	1 3/4	1 1/2-12	1 1/4-12	2	2.374	3.735	3/4	1 1/2	1 11/16	–	1/4	9/16	–	1 7/8	2 15/16	6 1/2
	2	1 3/4-12	1 1/2-12	2 1/4	2.624	3.735	7/8	1 11/16	1 15/16	–	1/4	9/16	–	2	3 1/16	6 5/8
5	1	7/8-14	3/4-16	1 1/8	1.499	2.468	1/2	7/8	15/16	–	1/4	7/16	–	1 3/8	2 7/16	6 5/16
	3 1/2	3 1/4-12	2 1/2-12	3 1/2	4.249	–	1	3	3 3/8	5/8	–	–	1 5/8	–	3 5/16	7 3/16
	1 3/8	1 1/4-12	1-14	1 5/8	1.999	2.968	5/8	1 1/8	1 5/16	–	1/4	1/2	–	1 5/8	2 11/16	6 9/16
	1 3/4	1 1/2-12	1 1/4-12	2	2.374	3.735	3/4	1 1/2	1 11/16	–	1/4	9/16	–	1 7/8	2 15/16	6 13/16
	2	1 3/4-12	1 1/2-12	2 1/4	2.624	3.735	7/8	1 11/16	1 15/16	–	1/4	9/16	–	2	3 1/16	6 15/16
	2 1/2	2 1/4-12	1 7/8-12	3	3.124	5.000	1	2 1/16	2 3/8	–	1/4	11/16	–	2 1/4	3 5/16	7 3/16
	3	2 3/4-12	2 1/4-12	3 1/2	3.749	–	1	2 5/8	2 7/8	5/8	–	–	1 5/8	–	3 5/16	7 3/16
6	1 3/8	1 1/4-12	1-14	1 5/8	1.999	2.968	5/8	1 1/8	1 5/16	–	1/4	7/16	–	1 5/8	2 13/16	7 1/16
	4	3 3/4-12	3-12	4	4.749	–	1	3 3/8	3 7/8	1/2	–	–	1 1/2	–	3 7/16	7 11/16
	1 3/4	1 1/2-12	1 1/4-12	2	2.374	3.625	3/4	1 1/2	1 11/16	–	1/4	9/16	–	1 7/8	3 1/16	7 5/16
	2	1 3/4-12	1 1/2-12	2 1/4	2.624	3.735	7/8	1 11/16	1 15/16	–	1/4	9/16	–	2	3 3/16	7 7/16
	2 1/2	2 1/4-12	1 7/8-12	3	3.124	4.312	1	2 1/16	2 3/8	–	1/4	11/16	–	2 1/4	3 7/16	7 11/16
	3	2 3/4-12	2 1/4-12	3 1/2	3.749	–	1	2 5/8	2 7/8	1/2	–	–	1 1/2	–	3 7/16	7 11/16
	3 1/2	3 1/4-12	2 1/2-12	3 1/2	4.249	–	1	3	3 3/8	1/2	–	–	1 1/2	–	3 7/16	7 11/16

Head Trunnion Mount

Style MT1
1" - 1 1/2" - 2" - 2 1/2" - 5" and 6" Bore
With Maximum Oversize Rods

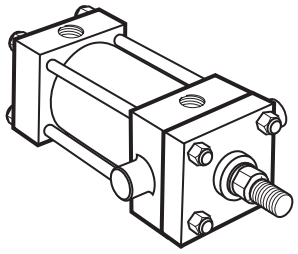

Tie Rod Retained Cartridge

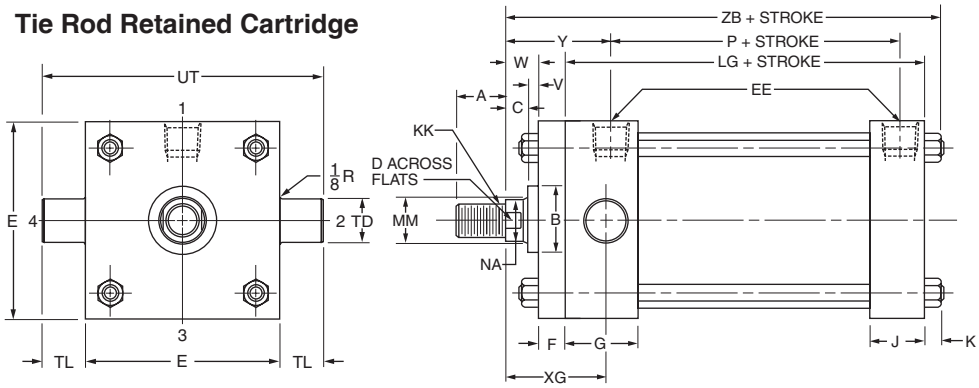

Before determining dimensions: See chart on page 5 for cylinder rod combinations that have removable cartridges.

Head Trunnion Mount

Style MT1
1 1/2" - 6" Bore

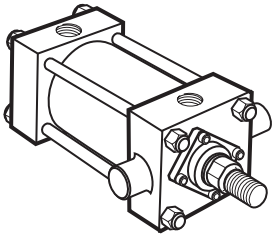

Removable Cartridge

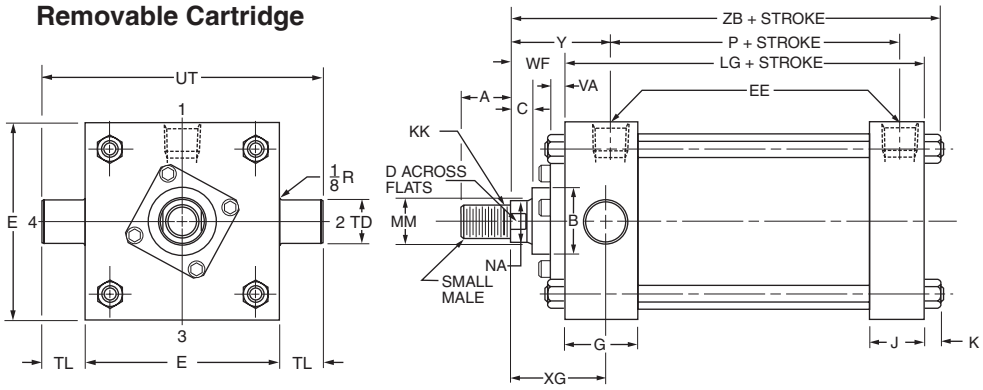

Rod End Dimensions — see table 2

Thread Style 2

Small Male

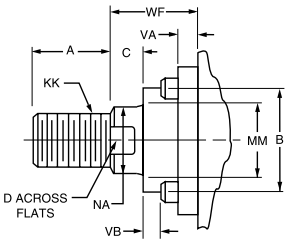

Thread Style 3

Short Female

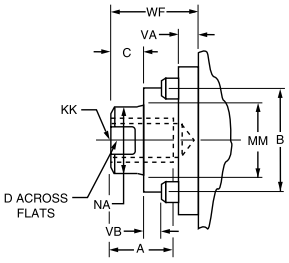

Thread Style 4

Intermediate Male

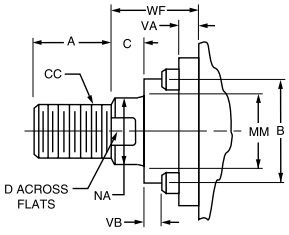

"Special" Thread Style 0

Special thread, extension, rod eye, blank, etc., are also available.

To order, specify "Style 0" and give desired dimensions for KK, A, W or WF. If otherwise special, furnish dimensioned sketch.

A high strength rod end stud is supplied on thread style 2 through 2" diameter rods. Larger sizes or special rod ends are cut threads. Style 2 rod ends are recommended where the workpiece is secured against the rod shoulder. When the workpiece is not shouldered, style 2 rod ends are recommended through 2" piston rod diameters and style 4 rod ends are recommended on larger diameters. Use style 3 for applications where female rod end threads are required. If rod end is not specified, style 2 will be supplied.

Table 1—Envelope and Mounting Dimensions

Bore	E	EE NPTF	F	G	J	K	+.000 -.001 TD	TL	UT	Add Stroke LG	Add Stroke P
1*	■	1/4	3/8	1 1/2	1	3/16	.750	3/4	3	3 1/2	2 1/8
1 1/2	2	3/8†	3/8	1 1/2	1	1/4	1.000	1	4	3 5/8	2 1/4
2	2 1/2	3/8†	3/8	1 1/2	1	5/16	1.000	1	4 1/2	3 5/8	2 1/4
2 1/2	3	3/8†	3/8	1 1/2	1	5/16	1.000	1	5	3 3/4	2 3/8
3 1/4	3 3/4	1/2	–	1 3/4	1 1/4	3/8	1.000	1	5 3/4	4 1/4	2 5/8
4	4 1/2	1/2	–	1 3/4	1 1/4	3/8	1.000	1	6 1/2	4 1/4	2 5/8
5	5 1/2	1/2	5/8	1 3/4	1 1/4	7/16	1.000	1	7 1/2	4 1/2	2 7/8
6	6 1/2	3/4	3/4	2	1 1/2	7/16	1.375	1 3/8	9 1/4	5	3 1/8

* Cushion not available on 1" bore.

† On 1 1/2", 2" and 2 1/2" bore sizes, the head-end (only) pipe thread is not full depth on cylinders with maximum oversize rods. Minimum of three full threads available.

■ 1" bore head is 1 3/4" x 1 1/2". See page 12, Section A.

Table 2—Rod End Dimensions and Envelope Dimensions Affected By Rod Size

Bore	Rod Dia. MM	Thread Style 4 CC	Thread Style 2 & 3 KK	A	+.000 -.002 B	C	D	NA	V	VA	VB	W	WF	XG	Y	Add Stroke ZB
1	1/2	7/16-20	5/16-24	5/8	.999	3/8	3/8	7/16	1/4	–	–	5/8	–	1 3/4	1 15/16	4 11/16
	5/8	1/2-20	7/16-20	3/4	1.124	3/8	1/2	9/16	1/4	–	–	5/8	–	1 3/4	1 15/16	4 11/16
1 1/2	5/8	1/2-20	7/16-20	3/4	1.124	3/8	1/2	9/16	–	1/4	3/16	–	1	1 3/4	1 15/16	4 7/8
	1	7/8-14	3/4-16	1 1/8	1.499	1/2	7/8	15/16	1/2	–	–	1	–	2 1/8	2 5/16	5 1/4
2	5/8	1/2-20	7/16-20	3/4	1.124	3/8	1/2	9/16	–	1/4	3/16	–	1	1 3/4	1 15/16	4 15/16
	1 3/8	1 1/4-12	1-14	1 5/8	1.999	5/8	1 1/8	1 5/16	5/8	–	–	1 1/4	–	2 3/8	2 9/16	5 9/16
	1	7/8-14	3/4-16	1 1/8	1.499	1/2	7/8	15/16	–	1/4	7/16	–	1 3/8	2 1/8	2 5/16	5 5/16
2 1/2	5/8	1/2-20	7/16-20	3/4	1.124	3/8	1/2	9/16	–	1/4	3/16	–	1	1 3/4	1 15/16	5 1/16
	1 3/4	1 1/2-12	1 1/4-12	2	2.374	3/4	1 1/2	1 11/16	3/4	–	–	1 1/2	–	2 5/8	2 13/16	5 15/16
	1	7/8-14	3/4-16	1 1/8	1.499	1/2	7/8	15/16	–	1/4	7/16	–	1 3/8	2 1/8	2 5/16	5 7/16
	1 3/8	1 1/4-12	1-14	1 5/8	1.999	5/8	1 1/8	1 5/16	5/8	–	–	1 1/4	–	2 3/8	2 9/16	5 11/16
3 1/4	1	7/8-14	3/4-16	1 1/8	1.499	1/2	7/8	15/16	–	1/4	7/16	–	1 3/8	2 1/4	2 7/16	6
	2	1 3/4-12	1 1/2-12	2 1/4	2.624	7/8	1 11/16	1 15/16	–	1/4	9/16	–	2	2 7/8	3 1/16	6 5/8
	1 3/8	1 1/4-12	1-14	1 5/8	1.999	5/8	1 1/8	1 5/16	–	1/4	1/2	–	1 5/8	2 1/2	2 11/16	6 1/4
	1 3/4	1 1/2-12	1 1/4-12	2	2.374	3/4	1 1/2	1 11/16	–	1/4	9/16	–	1 7/8	2 3/4	2 15/16	6 1/2
4	1	7/8-14	3/4-16	1 1/8	1.499	1/2	7/8	15/16	–	1/4	7/16	–	1 3/8	2 1/4	2 7/16	6
	2 1/2	2 1/4-12	1 7/8-12	3	3.124	1	2 1/16	2 3/8	–	1/4	11/16	–	2 1/4	3 1/8	3 5/16	6 7/8
	1 3/8	1 1/4-12	1-14	1 5/8	1.999	5/8	1 1/8	1 5/16	–	1/4	1/2	–	1 5/8	2 1/2	2 11/16	6 1/4
	1 3/4	1 1/2-12	1 1/4-12	2	2.374	3/4	1 1/2	1 11/16	–	1/4	9/16	–	1 7/8	2 3/4	2 15/16	6 1/2
	2	1 3/4-12	1 1/2-12	2 1/4	2.624	7/8	1 11/16	1 15/16	–	1/4	9/16	–	2	2 7/8	3 1/16	6 5/8
5	1	7/8-14	3/4-16	1 1/8	1.499	1/2	7/8	15/16	–	1/4	7/16	–	1 3/8	2 1/4	2 7/16	6 5/16
	3 1/2	3 1/4-12	2 1/2-12	3 1/2	4.249	1	3	3 3/8	5/8	–	–	1 5/8	–	3 1/8	3 5/16	7 3/16
	1 3/8	1 1/4-12	1-14	1 5/8	1.999	5/8	1 1/8	1 5/16	–	1/4	1/2	–	1 5/8	2 1/2	2 11/16	6 9/16
	1 3/4	1 1/2-12	1 1/4-12	2	2.374	3/4	1 1/2	1 11/16	–	1/4	9/16	–	1 7/8	2 3/4	2 15/16	6 13/16
	2	1 3/4-12	1 1/2-12	2 1/4	2.624	7/8	1 11/16	1 15/16	–	1/4	9/16	–	2	2 7/8	3 1/16	6 15/16
	2 1/2	2 1/4-12	1 7/8-12	3	3.124	1	2 1/16	2 3/8	–	1/4	11/16	–	2 1/4	3 1/8	3 5/16	7 3/16
	3	2 3/4-12	2 1/4-12	3 1/2	3.749	1	2 5/8	2 7/8	5/8	–	–	1 5/8	–	3 1/8	3 5/16	7 3/16
6	1 3/8	1 1/4-12	1-14	1 5/8	1.999	5/8	1 1/8	1 5/16	–	1/4	7/16	–	1 5/8	2 5/8	2 13/16	7 1/16
	4	3 3/4-12	3-12	4	4.749	1	3 3/8	3 7/8	1/2	–	–	1 1/2	–	3 1/4	3 7/16	7 11/16
	1 3/4	1 1/2-12	1 1/4-12	2	2.374	3/4	1 1/2	1 11/16	–	1/4	9/16	–	1 7/8	2 7/8	3 1/16	7 5/16
	2	1 3/4-12	1 1/2-12	2 1/4	2.624	7/8	1 11/16	1 15/16	–	1/4	9/16	–	2	3	3 3/16	7 7/16
	2 1/2	2 1/4-12	1 7/8-12	3	3.124	1	2 1/16	2 3/8	–	1/4	11/16	–	2 1/4	3 1/4	3 7/16	7 11/16
	3	2 3/4-12	2 1/4-12	3 1/2	3.749	1	2 5/8	2 7/8	1/2	–	–	1 1/2	–	3 1/4	3 7/16	7 11/16
	3 1/2	3 1/4-12	2 1/2-12	3 1/2	4.249	1	3	3 3/8	1/2	–	–	1 1/2	–	3 1/4	3 7/16	7 11/16

Cap Trunnion Mount
Style MT2
1" - 1 1/2" - 2" - 2 1/2" - 5" and 6" Bore
With Maximum Oversize Rods

Tie Rod Retained Cartridge

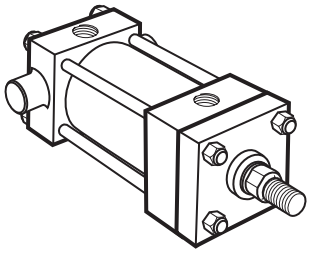

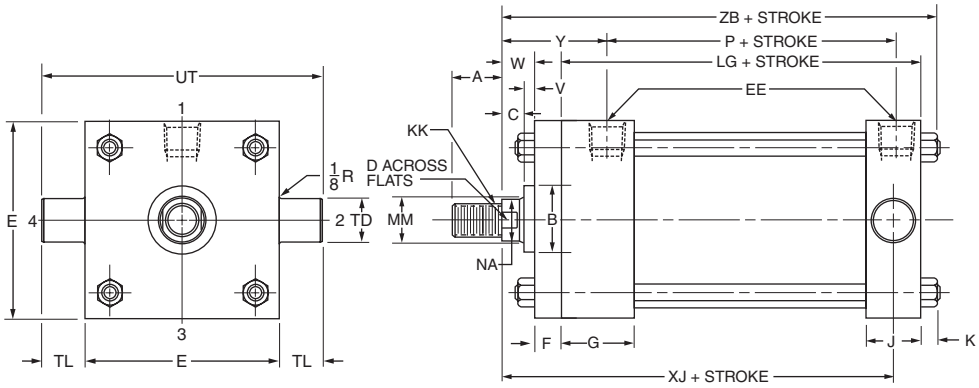

Before determining dimensions: See chart on page 5 for cylinder rod combinations that have removable cartridges.

Cap Trunnion Mount
Style MT2
1 1/2" - 6" Bore

Removable Cartridge

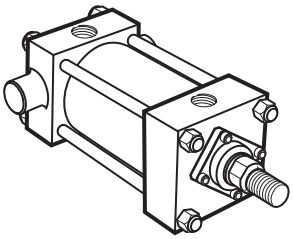

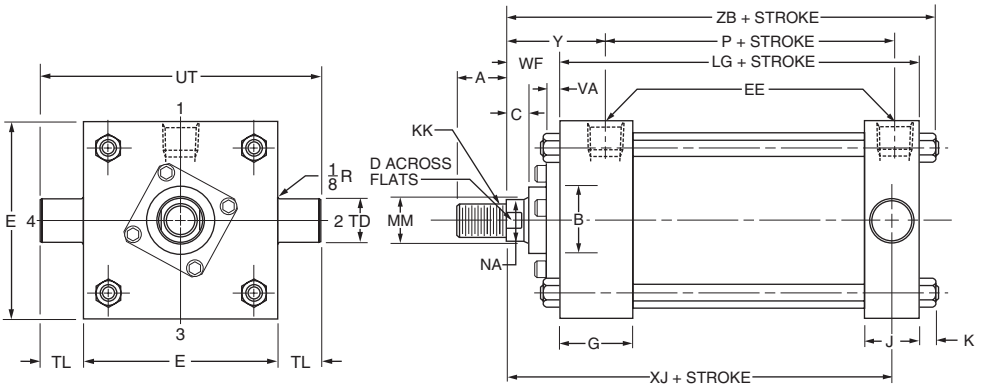

Rod End Dimensions — see table 2

Thread Style 2
Small Male

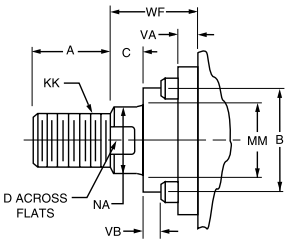

Thread Style 3
Short Female

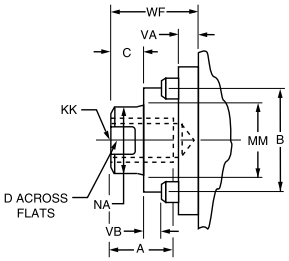

Thread Style 4
Intermediate Male

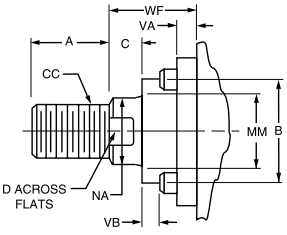

"Special" Thread Style 0

Special thread, extension, rod eye, blank, etc., are also available.

To order, specify "Style 0" and give desired dimensions for KK, A, W or WF. If otherwise special, furnish dimensioned sketch.

A high strength rod end stud is supplied on thread style 2 through 2" diameter rods. Larger sizes or special rod ends are cut threads. Style 2 rod ends are recommended where the workpiece is secured against the rod shoulder. When the workpiece is not shouldered, style 2 rod ends are recommended through 2" piston rod diameters and style 4 rod ends are recommended on larger diameters. Use style 3 for applications where female rod end threads are required. If rod end is not specified, style 2 will be supplied.

Table 1—Envelope and Mounting Dimensions

Bore	E	EE NPTF	F	G	J	K	+.000 -.001 TD	TL	UT	Add Stroke LG	Add Stroke P
1*	■	1/4	3/8	1 1/2	1	3/16	.750	3/4	3	3 1/2	2 1/8
1 1/2	2	3/8†	3/8	1 1/2	1	1/4	1.000	1	4	3 5/8	2 1/4
2	2 1/2	3/8†	3/8	1 1/2	1	5/16	1.000	1	4 1/2	3 5/8	2 1/4
2 1/2	3	3/8†	3/8	1 1/2	1	5/16	1.000	1	5	3 3/4	2 3/8
3 1/4	3 3/4	1/2	–	1 3/4	1 1/4	3/8	1.000	1	5 3/4	4 1/4	2 5/8
4	4 1/2	1/2	–	1 3/4	1 1/4	3/8	1.000	1	6 1/2	4 1/4	2 5/8
5	5 1/2	1/2	5/8	1 3/4	1 1/4	7/16	1.000	1	7 1/2	4 1/2	2 7/8
6	6 1/2	3/4	3/4	2	1 1/2	7/16	1.375	1 3/8	9 1/4	5	3 1/8

* Cushion not available on 1" bore.

† On 1 1/2", 2" and 2 1/2" bore sizes, the head-end (only) pipe thread is not full depth on cylinders with maximum oversize rods. Minimum of three full threads available.

■ 1" bore head is 1 3/4" x 1 1/2". See page 12, Section A.

Table 2—Rod End Dimensions and Envelope Dimensions Affected By Rod Size

Bore	Rod Dia. MM	Thread Style 4 CC	Thread Style 2 & 3 KK	A	+.000 -.002 B	C	D	NA	V	VA	VB	W	WF	Y	Add Stroke XJ	Add Stroke ZB
1	1/2	7/16-20	5/16-24	5/8	.999	3/8	3/8	7/16	1/4	–	–	5/8	–	1 15/16	4	4 11/16
	5/8	1/2-20	7/16-20	3/4	1.124	3/8	1/2	9/16	1/4	–	–	5/8	–	1 15/16	4	4 11/16
1 1/2	5/8	1/2-20	7/16-20	3/4	1.124	3/8	1/2	9/16	–	1/4	3/16	–	1	1 15/16	4 1/8	4 7/8
	1	7/8-14	3/4-16	1 1/8	1.499	1/2	7/8	15/16	1/2	–	–	1	–	2 5/16	4 1/2	5 1/4
2	5/8	1/2-20	7/16-20	3/4	1.124	3/8	1/2	9/16	–	1/4	3/16	–	1	1 15/16	4 1/8	4 15/16
	1 3/8	1 1/4-12	1-14	1 5/8	1.999	5/8	1 1/8	1 5/16	5/8	–	–	1 1/4	–	2 9/16	4 3/4	5 9/16
	1	7/8-14	3/4-16	1 1/8	1.499	1/2	7/8	15/16	–	1/4	7/16	–	1 3/8	2 5/16	4 1/2	5 5/16
2 1/2	5/8	1/2-20	7/16-20	3/4	1.124	3/8	1/2	9/16	–	1/4	3/16	–	1	1 15/16	4 1/4	5 1/16
	1 3/4	1 1/2-12	1 1/4-12	2	2.374	3/4	1 1/2	1 11/16	3/4	–	–	1 1/2	–	2 13/16	5 1/8	5 15/16
	1	7/8-14	3/4-16	1 1/8	1.499	1/2	7/8	15/16	–	1/4	7/16	–	1 3/8	2 5/16	4 5/8	5 7/16
	1 3/8	1 1/4-12	1-14	1 5/8	1.999	5/8	1 1/8	1 5/16	5/8	–	–	1 1/4	1 5/8	2 9/16	4 7/8	5 11/16
3 1/4	1	7/8-14	3/4-16	1 1/8	1.499	1/2	7/8	15/16	–	1/4	7/16	–	1 3/8	2 7/16	5	6
	2	1 3/4-12	1 1/2-12	2 1/4	2.624	7/8	1 11/16	1 15/16	–	1/4	9/16	–	2	3 1/16	5 5/8	6 5/8
	1 3/8	1 1/4-12	1-14	1 5/8	1.999	5/8	1 1/8	1 5/16	–	1/4	1/2	–	1 5/8	2 11/16	5 1/4	6 1/4
	1 3/4	1 1/2-12	1 1/4-12	2	2.374	3/4	1 1/2	1 11/16	–	1/4	9/16	–	1 7/8	2 15/16	5 1/2	6 1/2
4	1	7/8-14	3/4-16	1 1/8	1.499	1/2	7/8	15/16	–	1/4	7/16	–	1 3/8	2 7/16	5	6
	2 1/2	2 1/4-12	1 7/8-12	3	3.124	1	2 1/16	2 3/8	–	1/4	11/16	–	2 1/4	3 5/16	5 7/8	6 7/8
	1 3/8	1 1/4-12	1-14	1 5/8	1.999	5/8	1 1/8	1 5/16	–	1/4	1/2	–	1 5/8	2 11/16	5 1/4	6 1/4
	1 3/4	1 1/2-12	1 1/4-12	2	2.374	3/4	1 1/2	1 11/16	–	1/4	9/16	–	1 7/8	2 15/16	5 1/2	6 1/2
	2	1 3/4-12	1 1/2-12	2 1/4	2.624	7/8	1 11/16	1 15/16	–	1/4	9/16	–	2	3 1/16	5 5/8	6 5/8
5	1	7/8-14	3/4-16	1 1/8	1.499	1/2	7/8	15/16	–	1/4	7/16	–	1 3/8	2 7/16	5 1/4	6 5/16
	3 1/2	3 1/4-12	2 1/2-12	3 1/2	4.249	1	3	3 3/8	5/8	–	–	1 5/8	–	3 5/16	6 1/8	7 3/16
	1 3/8	1 1/4-12	1-14	1 5/8	1.999	5/8	1 1/8	1 5/16	–	1/4	1/2	–	1 5/8	2 11/16	5 1/2	6 9/16
	1 3/4	1 1/2-12	1 1/4-12	2	2.374	3/4	1 1/2	1 11/16	–	1/4	9/16	–	1 7/8	2 15/16	5 3/4	6 13/16
	2	1 3/4-12	1 1/2-12	2 1/4	2.624	7/8	1 11/16	1 15/16	–	1/4	9/16	–	2	3 1/16	5 7/8	6 15/16
	2 1/2	2 1/4-12	1 7/8-12	3	3.124	1	2 1/16	2 3/8	–	1/4	11/16	–	2 1/4	3 5/16	6 1/8	7 3/16
	3	2 3/4-12	2 1/4-12	3 1/2	3.749	1	2 5/8	2 7/8	5/8	–	–	1 5/8	–	3 5/16	6 1/8	7 3/16
6	1 3/8	1 1/4-12	1-14	1 5/8	1.999	5/8	1 1/8	1 5/16	–	1/4	7/16	–	1 5/8	2 13/16	5 7/8	7 1/16
	4	3 3/4-12	3-12	4	4.749	1	3 3/8	3 7/8	1/2	–	–	1 1/2	–	3 7/16	6 1/2	7 11/16
	1 3/4	1 1/2-12	1 1/4-12	2	2.374	3/4	1 1/2	1 11/16	–	1/4	9/16	–	1 7/8	3 1/16	6 1/8	7 5/16
	2	1 3/4-12	1 1/2-12	2 1/4	2.624	7/8	1 11/16	1 15/16	–	1/4	9/16	–	2	3 3/16	6 1/4	7 7/16
	2 1/2	2 1/4-12	1 7/8-12	3	3.124	1	2 1/16	2 3/8	–	1/4	11/16	–	2 1/4	3 7/16	6 1/2	7 11/16
	3	2 3/4-12	2 1/4-12	3 1/2	3.749	1	2 5/8	2 7/8	1/2	–	–	1 1/2	–	3 7/16	6 1/2	7 11/16
	3 1/2	3 1/4-12	2 1/2-12	3 1/2	4.249	1	3	3 3/8	1/2	–	–	1 1/2	–	3 7/16	6 1/2	7 11/16

Intermediate Fixed Trunnion Mount
Style MT4
1 1/2" - 2" - 2 1/2" - 5" and 6" Bore
With Maximum Oversize Rods

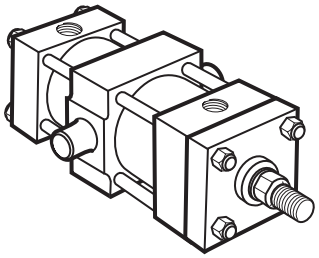

Tie Rod Retained Cartridge

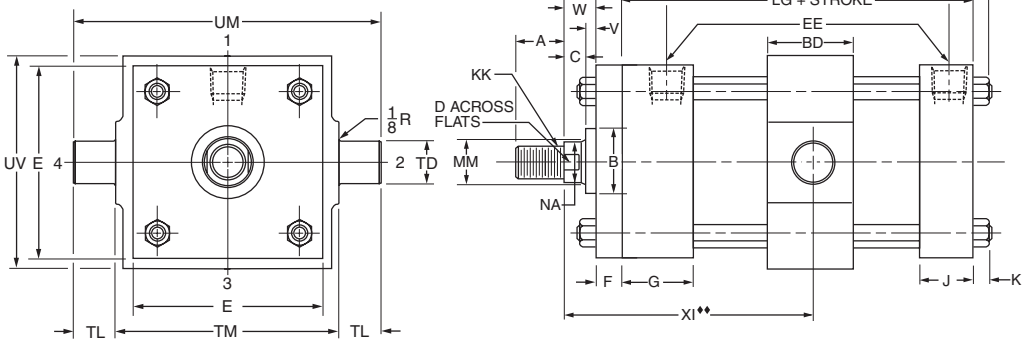

♦♦Dimension XI to be specified by customer.

Before determining dimensions: See chart on page 5 for cylinder rod combinations that have removable cartridges.

Intermediate Fixed Trunnion Mount
Style MT4
1 1/2" - 6" Bore

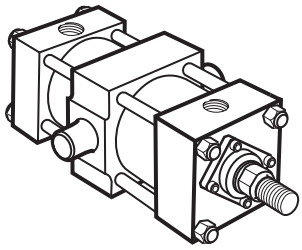

Removable Cartridge

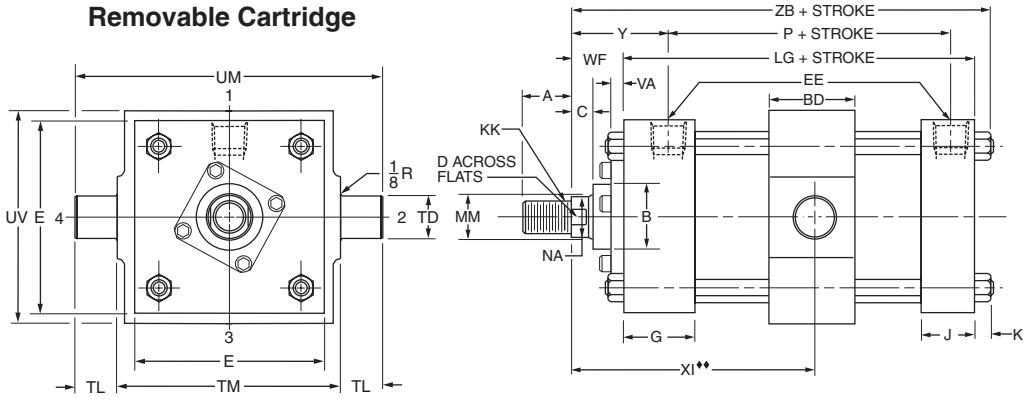

♦♦Dimension XI to be specified by customer.

Rod End Dimensions — see table 2

Thread Style 2
Small Male

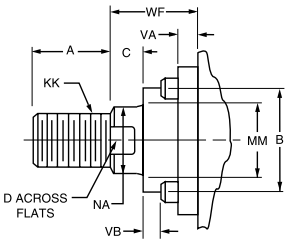

Thread Style 3
Short Female

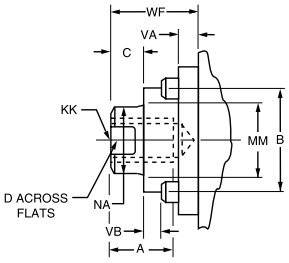

Thread Style 4
Intermediate Male

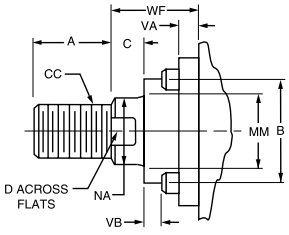

"Special" Thread Style 0

Special thread, extension, rod eye, blank, etc., are also available.

To order, specify "Style 0" and give desired dimensions for KK, A, W or WF. If otherwise special, furnish dimensioned sketch.

A high strength rod end stud is supplied on thread style 2 through 2" diameter rods. Larger sizes or special rod ends are cut threads. Style 2 rod ends are recommended where the workpiece is secured against the rod shoulder. When the workpiece is not shouldered, style 2 rod ends are recommended through 2" piston rod diameters and style 4 rod ends are recommended on larger diameters. Use style 3 for applications where female rod end threads are required. If rod end is not specified, style 2 will be supplied.

Table 1—Envelope and Mounting Dimensions

Bore	BD	E	EE NPTF	F	G	J	K	+.000 -.001 TD	TL	TM	UM	UV	Minimum Stroke	Add Stroke LG	Add Stroke P
1½	1¼	2	⅜†	⅜	1½	1	¼	1.000	1	2½	4½	2½	¼	3⅝	2¼
2	1½	2½	⅜†	⅜	1½	1	5/16	1.000	1	3	5	3	½	3⅝	2¼
2½	1½	3	⅜†	⅜	1½	1	5/16	1.000	1	3½	5½	3½	⅜	3¾	2⅜
3¼	2	3¾	½	⅝	1¾	1¼	⅜	1.000	1	4½	6½	4¼	⅞	4¼	2⅝
4	2	4½	½	–	1¾	1¼	⅜	1.000	1	5¼	7¼	5	⅞	4¼	2⅝
5	2	5½	½	–	1¾	1¼	7/16	1.000	1	6¼	8¼	6	⅝	4½	2⅞
6	2½	6½	¾	¾	2	1½	7/16	1.375	1⅜	7⅝	10⅜	7	1⅛	5	3⅛

†On 1½", 2" and 2½" bore sizes, the head-end (only) pipe thread is not full depth on cylinders with maximum oversize rods. Minimum of three full threads available.

Table 2—Rod End Dimensions and Envelope Dimensions Affected By Rod Size

Bore	Rod Dia. MM	Thread Style 4 CC	Thread Style 2 & 3 KK	A	+.000 -.002 B	C	D	NA	V	VA	VB	W	WF	Min.♦♦ XI	Y	Add Stroke ZB
1½	⅝	½-20	7/16-20	¾	1.124	⅜	½	9/16	–	¼	3/16	–	1	3 3/16	1 15/16	4⅞
	1	⅞-14	¾-16	1⅛	1.499	½	⅞	15/16	½	–	–	1	–	3 9/16	2 5/16	5¼
2	⅝	½-20	7/16-20	¾	1.124	⅜	½	9/16	–	¼	3/16	–	1	3 5/16	1 15/16	4 15/16
	1⅜	1¼-12	1-14	1⅝	1.999	⅝	1⅛	1 5/16	⅝	–	–	1¼	–	3 15/16	2 9/16	5 9/16
	1	⅞-14	¾-16	1⅛	1.499	½	⅞	15/16	–	¼	7/16	–	1⅜	3 11/16	2 5/16	5 5/16
2½	⅝	½-20	7/16-20	¾	1.124	⅜	½	9/16	–	¼	3/16	–	1	3 5/16	1 15/16	5 1/16
	1¾	1½-12	1¼-12	2	2.374	¾	1½	1 11/16	¾	–	–	1½	–	4 3/16	2 13/16	5 15/16
	1	⅞-14	¾-16	1⅛	1.499	½	⅞	15/16	–	¼	7/16	–	1⅜	3 11/16	2 5/16	5 7/16
	1⅜	1¼-12	1-14	1⅝	1.999	⅝	1⅛	1 5/16	⅝	–	–	1¼	–	3 15/16	2 9/16	5 11/16
3¼	1	⅞-14	¾-16	1⅛	1.499	½	⅞	15/16	–	¼	7/16	–	1⅜	4 3/16	2 7/16	6
	2	1¾-12	1½-12	2¼	2.624	⅞	1 11/16	1 15/16	–	¼	9/16	–	2	4 13/16	3 1/16	6⅝
	1⅜	1¼-12	1-14	1⅝	1.999	⅝	1⅛	1 5/16	–	¼	½	–	1⅝	4 7/16	2 11/16	6¼
	1¾	1½-12	1¼-12	2	2.374	¾	1½	1 11/16	–	¼	9/16	–	1⅞	4 11/16	2 15/16	6½
4	1	⅞-14	¾-16	1⅛	1.499	½	⅞	15/16	–	¼	7/16	–	1⅜	4 3/16	2 7/16	6
	2½	2¼-12	1⅞-12	3	3.124	1	2 1/16	2⅜	–	¼	11/16	–	2¼	5 1/16	3 5/16	6⅞
	1⅜	1¼-12	1-14	1⅝	1.999	⅝	1⅛	1 5/16	–	¼	½	–	1⅝	4 7/16	2 11/16	6¼
	1¾	1½-12	1¼-12	2	2.374	¾	1½	1 11/16	–	¼	9/16	–	1⅞	4 11/16	2 15/16	6½
	2	1¾-12	1½-12	2¼	2.624	⅞	1 11/16	1 15/16	–	¼	9/16	–	2	4 13/16	3 1/16	6⅝
5	1	⅞-14	¾-16	1⅛	1.499	½	⅞	15/16	–	¼	7/16	–	1⅜	4 5/16	2 7/16	6 5/16
	3½	3¼-12	2½-12	3½	4.249	1	3	3⅜	⅝	–	–	1⅝	–	5 1/16	3 5/16	7 3/16
	1⅜	1¼-12	1-14	1⅝	1.999	⅝	1⅛	1 5/16	–	¼	½	–	1⅝	4 7/16	2 11/16	6 9/16
	1¾	1½-12	1¼-12	2	2.374	¾	1½	1 11/16	–	¼	9/16	–	1⅞	4 11/16	2 15/16	6 13/16
	2	1¾-12	1½-12	2¼	2.624	⅞	1 11/16	1 15/16	–	¼	9/16	–	2	4 13/16	3 1/16	6 15/16
	2½	2¼-12	1⅞-12	3	3.124	1	2 1/16	2⅜	–	¼	11/16	–	2¼	5 1/16	3 5/16	7 3/16
	3	2¾-12	2¼-12	3½	3.749	1	2⅝	2⅞	⅝	–	–	1⅝	–	5 1/16	3 5/16	7 3/16
6	1⅜	1¼-12	1-14	1⅝	1.999	⅝	1⅛	1 5/16	–	¼	7/16	–	1⅝	4 15/16	2 13/16	7 1/16
	4	3¾-12	3-12	4	4.749	1	3⅜	3⅞	½	–	–	1½	–	5 9/16	3 7/16	7 11/16
	1¾	1½-12	1¼-12	2	2.374	¾	1½	1 11/16	–	¼	9/16	–	1⅞	5 3/16	3 1/16	7 5/16
	2	1¾-12	1½-12	2¼	2.624	⅞	1 11/16	1 15/16	–	¼	9/16	–	2	5 5/16	3 3/16	7 7/16
	2½	2¼-12	1⅞-12	3	3.124	1	2 1/16	2⅜	–	¼	11/16	–	2¼	5 9/16	3 7/16	7 11/16
	3	2¾-12	2¼-12	3½	3.749	1	2⅝	2⅞	½	–	–	1½	–	5 9/16	3 7/16	7 11/16
	3½	3¼-12	2½-12	3½	4.249	1	3	3⅜	½	–	–	1½	–	5 9/16	3 7/16	7 11/16

♦♦ Dimension XI to be specified by customer.

Cap Fixed Clevis Mount

Style MP1
1" - 1 1/2" - 2" - 2 1/2" - 5" and 6" Bore
With Maximum Oversize Rods

Tie Rod Retained Cartridge

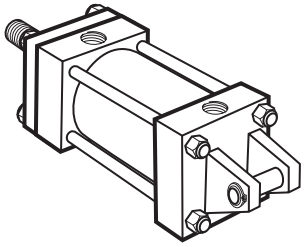

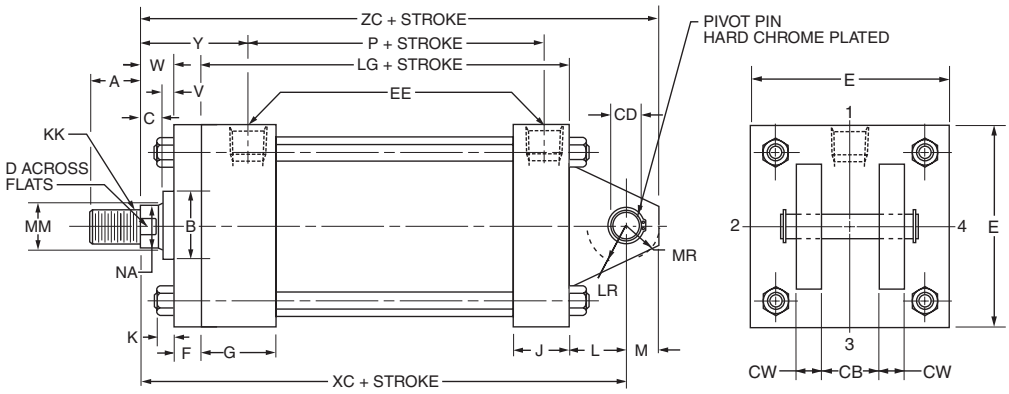

The 1", 4", 5" and 6" bore sizes have the tie rod nuts at both ends as shown. Tie rods thread into cap on all other bore sizes.

Before determining dimensions: See chart on page 5 for cylinder rod combinations that have removable cartridges.

Cap Fixed Clevis Mount

Style MP1
1 1/2" - 6" Bore

Removable Cartridge

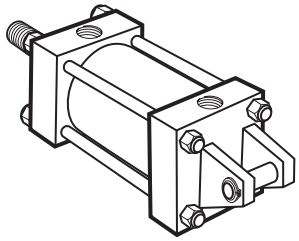

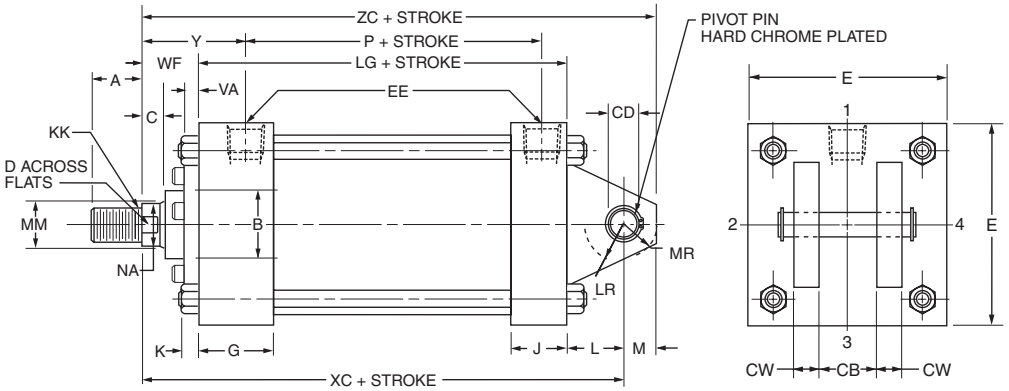

The 1", 4", 5" and 6" bore sizes have the tie rod nuts at both ends as shown. Tie rods thread into cap on all other bore sizes.

Rod End Dimensions — see table 2

Thread Style 2

Small Male

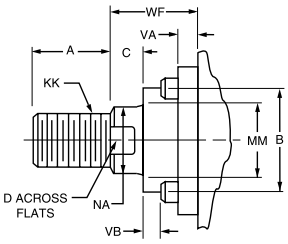

Thread Style 3

Short Female

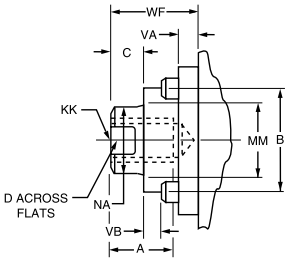

Thread Style 4

Intermediate Male

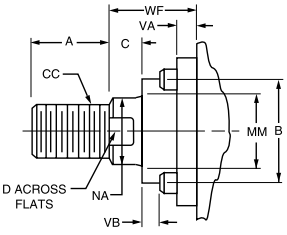

"Special" Thread Style 0

Special thread, extension, rod eye, blank, etc., are also available.

To order, specify "Style 0" and give desired dimensions for KK, A, W or WF. If otherwise special, furnish dimensioned sketch.

A high strength rod end stud is supplied on thread style 2 through 2" diameter rods. Larger sizes or special rod ends are cut threads. Style 2 rod ends are recommended where the workpiece is secured against the rod shoulder. When the workpiece is not shouldered, style 2 rod ends are recommended through 2" piston rod diameters and style 4 rod ends are recommended on larger diameters. Use style 3 for applications where female rod end threads are required. If rod end is not specified, style 2 will be supplied.

Table 1—Envelope and Mounting Dimensions

Bore	CB	+.000 -.002 CD•	CW	E	NPTF	EE F	G	J	K	L	LR	M	MR	Add Stroke LG	Add Stroke P
1*	**	.441**	**	■	1/4	3/8	1 1/2	1	3/16	1/2**	1/2**	7/16**	1/2**	3 1/2**	2 1/8
1 1/2	3/4	.501	1/2	2	3/8†	3/8	1 1/2	1	1/4	3/4	3/4	1/2	5/8	3 5/8	2 1/4
2	3/4	.501	1/2	2 1/2	3/8†	3/8	1 1/2	1	5/16	3/4	3/4	1/2	5/8	3 5/8	2 1/4
2 1/2	3/4	.501	1/2	3	3/8†	3/8	1 1/2	1	5/16	3/4	3/4	1/2	5/8	3 3/4	2 3/8
3 1/4	1 1/4	.751	5/8	3 3/4	1/2	–	1 3/4	1 1/4	3/8	1 1/4	1	3/4	15/16	4 1/4	2 5/8
4	1 1/4	.751	5/8	4 1/2	1/2	–	1 3/4	1 1/4	3/8	1 1/4	1	3/4	15/16	4 1/4	2 5/8
5	1 1/4	.751	5/8	5 1/2	1/2	5/8	1 3/4	1 1/4	7/16	1 1/4	1	3/4	15/16	4 1/2	2 7/8
6	1 1/2	1.001	3/4	6 1/2	3/4	3/4	2	1 1/2	7/16	1 1/2	1 1/4	1	1 3/16	5	3 1/8

† On 1 1/2", 2" and 2 1/2" bore sizes, the head-end (only) pipe thread is not full depth on cylinders with maximum oversize rods. Minimum of three full threads available.

■ 1" bore head is 1 3/4" x 1 1/2". See page 12, Section A.

* Cushions not available on 1" bore.

** In 1" bore size model only, a single eye mounting, 7/16" thick, is used. Dimension CD (.441") is hole diameter — pin not supplied.

• Dimension CD is pin diameter except in 1" bore.

Table 2—Rod End Dimensions and Envelope Dimensions Affected By Rod Size

Bore	Rod Dia. MM	Thread Style 4 CC	Thread Style 2 & 3 KK	A	+.000 -.002 B	C	D	NA	V	VA	VB	W	WF	Y	Add Stroke XC	Add Stroke ZC
1	1/2	7/16-20	5/16-20	5/8	.999	3/8	3/8	7/16	1/4	–	–	5/8	–	1 15/16	5	5 7/16
	5/8	1/2-20	7/16-20	3/4	1.124	3/8	1/2	9/16	1/4	–	–	5/8	–	1 15/16	5	5 7/16
1 1/2	5/8	1/2-20	7/16-20	3/4	1.124	3/8	1/2	9/16	–	1/4	3/16	–	1	1 15/16	5 3/8	5 7/8
	1	7/8-14	3/4-16	1 1/8	1.499	1/2	7/8	15/16	1/2	–	–	1	–	2 5/16	5 3/4	6 1/4
2	5/8	1/2-20	7/16-20	3/4	1.124	3/8	1/2	9/16	–	1/4	3/16	–	1	1 15/16	5 3/8	5 7/8
	1 3/8	1 1/4-12	1-14	1 5/8	1.999	5/8	1 1/8	1 5/16	5/8	–	–	1 1/4	–	2 9/16	6	6 1/2
	1	7/8-14	3/4-16	1 1/8	1.499	1/2	7/8	15/16	–	1/4	7/16	–	1 3/8	2 5/16	5 3/4	6 1/4
2 1/2	5/8	1/2-20	7/16-20	3/4	1.124	3/8	1/2	9/16	–	1/4	3/16	–	1	1 15/16	5 1/2	6
	1 3/4	1 1/2-12	1 1/4-12	2	2.374	3/4	1 1/2	1 11/16	3/4	–	–	1 1/2	–	2 13/16	6 3/8	6 7/8
	1	7/8-14	3/4-16	1 1/8	1.499	1/2	7/8	15/16	–	1/4	7/16	–	1 3/8	2 5/16	5 7/8	6 3/8
	1 3/8	1 1/4-12	1-14	1 5/8	1.999	5/8	1 1/8	1 5/16	5/8	–	–	1 1/4	1 5/8	2 9/16	6 1/8	6 5/8
3 1/4	1	7/8-14	3/4-16	1 1/8	1.499	1/2	7/8	15/16	–	1/4	7/16	–	1 3/8	2 7/16	6 7/8	7 5/8
	2	1 3/4-12	1 1/2-12	2 1/4	2.624	7/8	1 11/16	1 15/16	–	1/4	9/16	–	2	3 1/16	7 1/2	8 1/4
	1 3/8	1 1/4-12	1-14	1 5/8	1.999	5/8	1 1/8	1 5/16	–	1/4	1/2	–	1 5/8	2 11/16	7 1/8	7 7/8
	1 3/4	1 1/2-12	1 1/4-12	2	2.374	3/4	1 1/2	1 11/16	–	1/4	9/16	–	1 7/8	2 15/16	7 3/8	8 1/8
4	1	7/8-14	3/4-16	1 1/8	1.499	1/2	7/8	15/16	–	1/4	7/16	–	1 3/8	2 7/16	6 7/8	7 5/8
	2 1/2	2 1/4-12	1 7/8-12	3	3.124	1	2 1/16	2 3/8	–	1/4	11/16	–	2 1/4	3 5/16	7 3/4	8 1/2
	1 3/8	1 1/4-12	1-14	1 5/8	1.999	5/8	1 1/8	1 5/16	–	1/4	1/2	–	1 5/8	2 11/16	7 1/8	7 7/8
	1 3/4	1 1/2-12	1 1/4-12	2	2.374	3/4	1 1/2	1 11/16	–	1/4	9/16	–	1 7/8	2 15/16	7 3/8	8 1/8
	2	1 3/4-12	1 1/2-12	2 1/4	2.624	7/8	1 11/16	1 15/16	–	1/4	9/16	–	2	3 1/16	7 1/2	8 1/4
5	1	7/8-14	3/4-16	1 1/8	1.499	1/2	7/8	15/16	–	1/4	7/16	–	1 3/8	2 7/16	7 1/8	7 7/8
	3 1/2	3 1/4-12	2 1/2-12	3 1/2	4.249	1	3	3 3/8	5/8	–	–	1 5/8	–	3 5/16	8	8 3/4
	1 3/8	1 1/4-12	1-14	1 5/8	1.999	5/8	1 1/8	1 5/16	–	1/4	1/2	–	1 5/8	2 11/16	7 3/8	8 1/8
	1 3/4	1 1/2-12	1 1/4-12	2	2.374	3/4	1 1/2	1 11/16	–	1/4	9/16	–	1 7/8	2 15/16	7 5/8	8 3/8
	2	1 3/4-12	1 1/2-12	2 1/4	2.624	7/8	1 11/16	1 15/16	–	1/4	9/16	–	2	3 1/16	7 3/4	8 1/2
	2 1/2	2 1/4-12	1 7/8-12	3	3.124	1	2 1/16	2 3/8	–	1/4	11/16	–	2 1/4	3 5/16	8	8 3/4
	3	2 3/4-12	2 1/4-12	3 1/2	3.749	1	2 5/8	2 7/8	5/8	–	–	1 5/8	–	3 5/16	8	8 3/4
6	1 3/8	1 1/4-12	1-14	1 5/8	1.999	5/8	1 1/8	1 5/16	–	1/4	7/16	–	1 5/8	2 13/16	8 1/8	9 1/8
	4	3 3/4-12	3-12	4	4.749	1	3 3/8	3 7/8	1/2	–	–	1 1/2	–	3 7/16	8 3/4	9 3/4
	1 3/4	1 1/2-12	1 1/4-12	2	2.374	3/4	1 1/2	1 11/16	–	1/4	9/16	–	1 7/8	3 1/16	8 3/8	9 3/8
	2	1 3/4-12	1 1/2-12	2 1/4	2.624	7/8	1 11/16	1 15/16	–	1/4	9/16	–	2	3 3/16	8 1/2	9 1/2
	2 1/2	2 1/4-12	1 7/8-12	3	3.124	1	2 1/16	2 3/8	–	1/4	11/16	–	2 1/4	3 7/16	8 3/4	9 3/4
	3	2 3/4-12	2 1/4-12	3 1/2	3.749	1	2 5/8	2 7/8	1/2	–	–	1 1/2	–	3 7/16	8 3/4	9 3/4
	3 1/2	3 1/4-12	2 1/2-12	3 1/2	4.249	1	3	3 3/8	1/2	–	–	1 1/2	–	3 7/16	8 3/4	9 3/4

Side Lug Mount
Style MS2
7" - 14" Bore

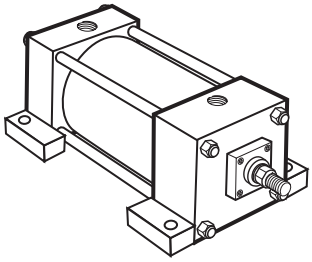

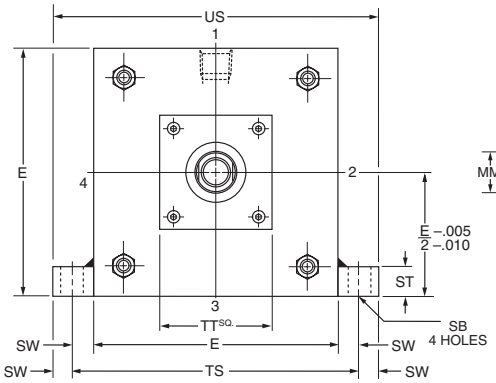

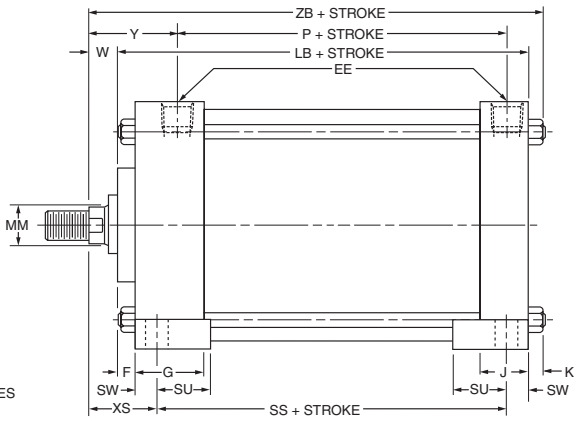

Side Tap Mount
Style MS4
7" - 14" Bore

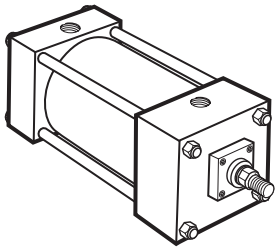

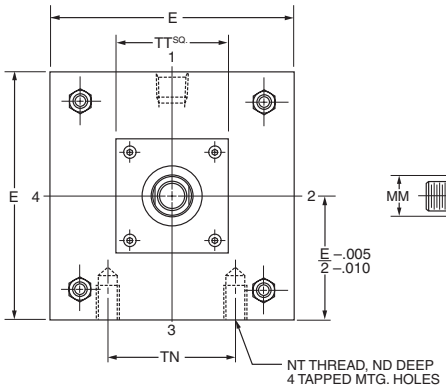

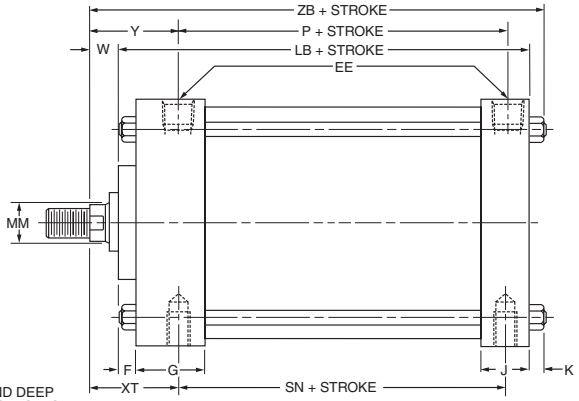

Rod End Dimensions — see table 2

Thread Style 2
Small Male

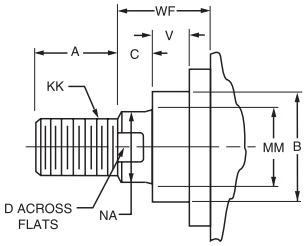

Thread Style 3
Short Female

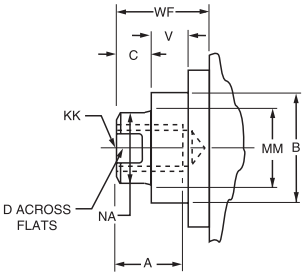

Thread Style 4
Intermediate Male

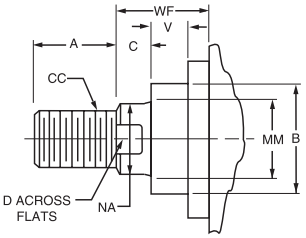

A high strength rod end stud is supplied on thread style 2 through 2" diameter rods. Larger sizes or special rod ends are cut threads. Style 2 rod ends are recommended where the workpiece is secured against the rod shoulder. When the workpiece is not shouldered, style 2 rod ends are recommended through 2" piston rod diameters and style 4 rod ends are recommended on larger diameters. Use style 3 for applications where female rod end threads are required. If rod end is not specified, style 2 will be supplied.

"Special" Thread Style 0

Special thread, extension, rod eye, blank, etc., are also available.

To order, specify "Style 0" and give desired dimensions for KK, A, W or WF. If otherwise special, furnish dimensioned sketch.

Table 1—Envelope and Mounting Dimensions

Bore	E	EE NPTF	F	G	J	K	ND	NT	SB*	ST	SU	SW	TN	TS	US	Add Stroke LB	P	SN	SS
7	7 1/2	3/4	3/4	2	1 1/2	9/16	1 1/8	3/4-10	13/16	1	1 9/16	11/16	3 1/2	8 7/8	10 1/4	5 7/8	3 1/4	3 1/4	3 3/4
8	8 1/2	3/4	3/4	2	1 1/2	9/16	1 1/8	3/4-10	13/16	1	1 9/16	11/16	4 1/2	9 7/8	11 1/4	5 7/8	3 1/4	3 1/4	3 3/4
10	10 5/8	1	3/4	2 1/4	2	11/16	1 1/2	1-8	1 1/16	1 1/4	2	7/8	5 1/2	12 3/8	14 1/8	7 1/8	4 1/8	4 1/8	4 5/8
12	12 3/4	1	3/4	2 1/4	2	11/16	1 1/2	1-8	1 1/16	1 1/4	2	7/8	7 1/4	14 1/2	16 1/4	7 5/8	4 5/8	4 5/8	5 1/8
14	14 3/4	1 1/4	3/4	2 3/4	2 1/4	3/4	1 7/8	1 1/4-7	1 5/16	1 1/2	2 1/2	1 1/8	8 3/8	17	19 1/4	8 7/8	5 1/2	5 1/2	5 7/8

*Upper surface spotfaced for socket head cap screw.

Table 2—Rod End Dimensions and Envelope Dimensions Affected By Rod Size

Bore	Rod Dia. MM	Thread Style 4 CC	Thread Style 2 & 3 KK	A	+.000 -.002 B	C	D	NA	TT	V	W	XS	XT	Y	Add Stroke ZB
7	1 3/8	1 1/4-12	1-14	1 5/8	1.999	5/8	1 1/8	1 5/16	4	1/4	7/8	2 5/16	2 13/16	2 13/16	7 5/16
	1 3/4	1 1/2-12	1 1/4-12	2	2.374	3/4	1 1/2	1 11/16	4	3/8	1 1/8	2 9/16	3 1/16	3 1/16	7 9/16
	2	1 3/4-12	1 1/2-12	2 1/4	2.624	7/8	1 11/16	1 15/16	4	3/8	1 1/4	2 11/16	3 3/16	3 3/16	7 11/16
8	1 3/8	1 1/4-12	1-14	1 5/8	1.999	5/8	1 1/8	1 5/16	4	1/4	7/8	2 5/16	2 13/16	2 13/16	7 5/16
	5 1/2	5 1/4-12	4-12	5 1/2	6.249	1	4 5/8	5 3/8	7	1/2	1 1/2	2 15/16	3 7/16	3 7/16	7 15/16
	1 3/4	1 1/2-12	1 1/4-12	2	2.374	3/4	1 1/2	1 11/16	4	3/8	1 1/8	2 9/16	3 1/16	3 1/16	7 9/16
	2	1 3/4-12	1 1/2-12	2 1/4	2.624	7/8	1 11/16	1 15/16	4	3/8	1 1/4	2 11/16	3 3/16	3 3/16	7 11/16
	2 1/2	2 1/4-12	1 7/8-12	3	3.124	1	2 1/16	2 3/8	4	1/2	1 1/2	2 15/16	3 7/16	3 7/16	7 15/16
	3	2 3/4-12	2 1/4-12	3 1/2	3.749	1	2 5/8	2 7/8	5 1/2	1/2	1 1/2	2 15/16	3 7/16	3 7/16	7 15/16
	3 1/2	3 1/4-12	2 1/2-12	3 1/2	4.249	1	3	3 3/8	5 1/2	1/2	1 1/2	2 15/16	3 7/16	3 7/16	7 15/16
	4	3 3/4-12	3-12	4	4.749	1	3 3/8	3 7/8	5 1/2	1/2	1 1/2	2 15/16	3 7/16	3 7/16	7 15/16
	4 1/2	4 1/4-12	3 1/4-12	4 1/2	5.249	1	3 7/8	4 3/8	7	1/2	1 1/2	2 15/16	3 7/16	3 7/16	7 15/16
	5	4 3/4-12	3 1/2-12	5	5.749	1	4 1/4	4 7/8	7	1/2	1 1/2	2 15/16	3 7/16	3 7/16	7 15/16
10	1 3/4	1 1/2-12	1 1/4-12	2	2.374	3/4	1 1/2	1 11/16	4	3/8	1 1/8	2 3/4	3 1/8	3 1/8	8 15/16
	2	1 3/4-12	1 1/2-12	2 1/4	2.624	7/8	1 11/16	1 15/16	4	3/8	1 1/4	2 7/8	3 1/4	3 1/4	9 1/16
	2 1/2	2 1/4-12	1 7/8-12	3	3.124	1	2 1/16	2 3/8	4	1/2	1 1/2	3 1/8	3 1/2	3 1/2	9 5/16
	3	2 3/4-12	2 1/4-12	3 1/2	3.749	1	2 5/8	2 7/8	5 1/2	1/2	1 1/2	3 1/8	3 1/2	3 1/2	9 5/16
	3 1/2	3 1/4-12	2 1/2-12	3 1/2	4.249	1	3	3 3/8	5 1/2	1/2	1 1/2	3 1/8	3 1/2	3 1/2	9 5/16
	4	3 3/4-12	3-12	4	4.749	1	3 3/8	3 7/8	5 1/2	1/2	1 1/2	3 1/8	3 1/2	3 1/2	9 5/16
	4 1/2	4 1/4-12	3 1/4-12	4 1/2	5.249	1	3 7/8	4 3/8	7	1/2	1 1/2	3 1/8	3 1/2	3 1/2	9 5/16
	5	4 3/4-12	3 1/2-12	5	5.749	1	4 1/4	4 7/8	7	1/2	1 1/2	3 1/8	3 1/2	3 1/2	9 5/16
	5 1/2	5 1/4-12	4-12	5 1/2	6.249	1	4 5/8	5 3/8	7	1/2	1 1/2	3 1/8	3 1/2	3 1/2	9 5/16
12	2	1 3/4-12	1 1/2-12	2 1/4	2.624	7/8	1 11/16	1 15/16	4	3/8	1 1/4	2 7/8	3 1/4	3 1/4	9 9/16
	2 1/2	2 1/4-12	1 7/8-12	3	3.124	1	2 1/16	2 3/8	4	1/2	1 1/2	3 1/8	3 1/2	3 1/2	9 13/16
	3	2 3/4-12	2 1/4-12	3 1/2	3.749	1	2 5/8	2 7/8	5 1/2	1/2	1 1/2	3 1/8	3 1/2	3 1/2	9 13/16
	3 1/2	3 1/4-12	2 1/2-12	3 1/2	4.249	1	3	3 3/8	5 1/2	1/2	1 1/2	3 1/8	3 1/2	3 1/2	9 13/16
	4	3 3/4-12	3-12	4	4.749	1	3 3/8	3 7/8	5 1/2	1/2	1 1/2	3 1/8	3 1/2	3 1/2	9 13/16
	4 1/2	4 1/4-12	3 1/4-12	4 1/2	5.249	1	3 7/8	4 3/8	7	1/2	1 1/2	3 1/8	3 1/2	3 1/2	9 13/16
	5	4 3/4-12	3 1/2-12	5	5.749	1	4 1/4	4 7/8	7	1/2	1 1/2	3 1/8	3 1/2	3 1/2	9 13/16
	5 1/2	5 1/4-12	4-12	5 1/2	6.249	1	4 5/8	5 3/8	7	1/2	1 1/2	3 1/8	3 1/2	3 1/2	9 13/16
14	2 1/2	2 1/4-12	1 7/8-12	3	3.124	1	2 1/16	2 3/8	4	1/2	1 1/2	3 3/8	3 13/16	3 13/16	11 1/8
	3	2 3/4-12	2 1/4-12	3 1/2	3.749	1	2 5/8	2 7/8	5 1/2	1/2	1 1/2	3 3/8	3 13/16	3 13/16	11 1/8
	3 1/2	3 1/4-12	2 1/2-12	3 1/2	4.249	1	3	3 3/8	5 1/2	1/2	1 1/2	3 3/8	3 13/16	3 13/16	11 1/8
	4	3 3/4-12	3-12	4	4.749	1	3 3/8	3 7/8	5 1/2	1/2	1 1/2	3 3/8	3 13/16	3 13/16	11 1/8
	4 1/2	4 1/4-12	3 1/4-12	4 1/2	5.249	1	3 7/8	4 3/8	7	1/2	1 1/2	3 3/8	3 13/16	3 13/16	11 1/8
	5	4 3/4-12	3 1/2-12	5	5.749	1	4 1/4	4 7/8	7	1/2	1 1/2	3 3/8	3 13/16	3 13/16	11 1/8
	5 1/2	5 1/4-12	4-12	5 1/2	6.249	1	4 5/8	5 3/8	7	1/2	1 1/2	3 3/8	3 13/16	3 13/16	11 1/8

Head Square Mount

Style ME3
7" - 14" Bore

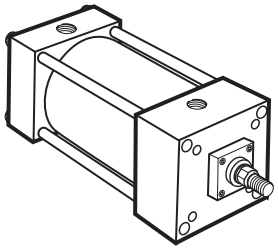

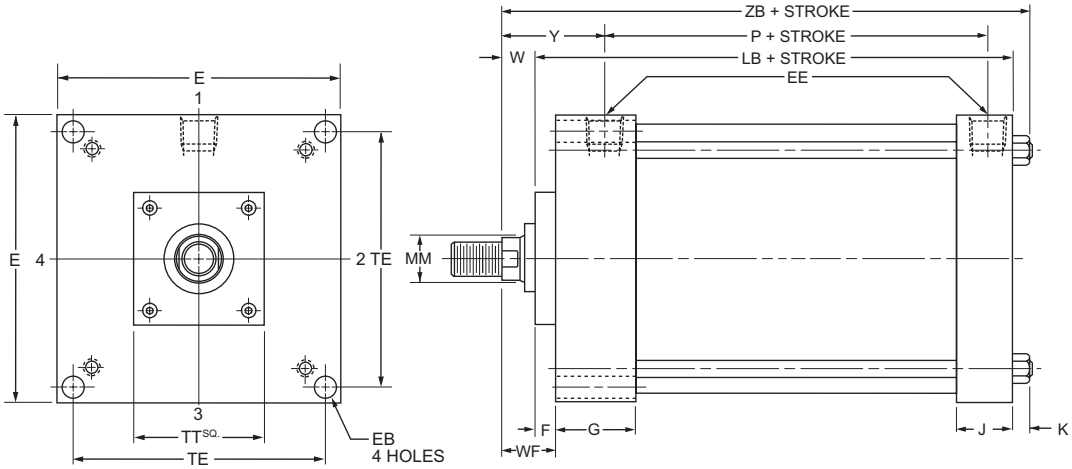

Cap Square Mount

Style ME4
7" - 14" Bore

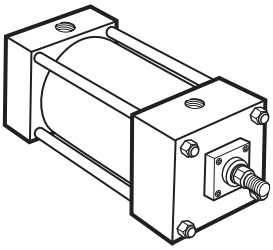

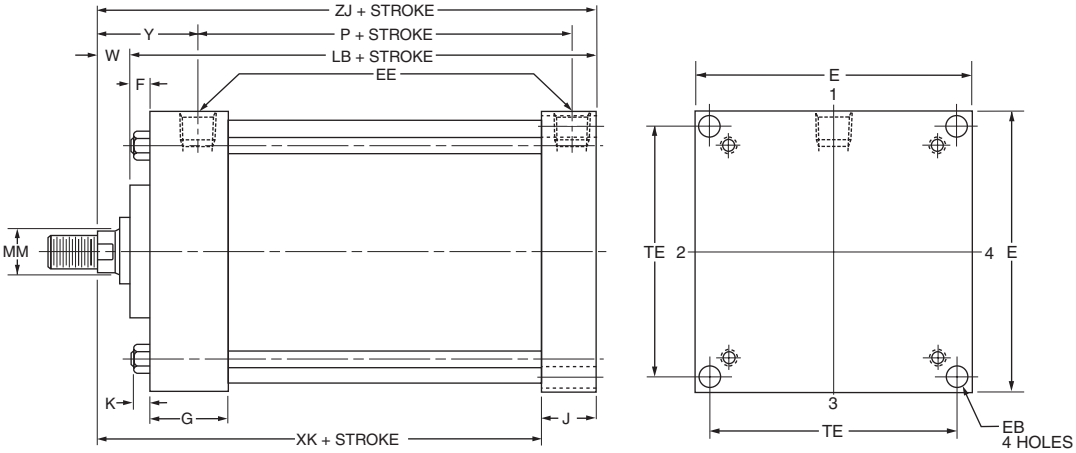

Rod End Dimensions — see table 2

Thread Style 2

Small Male

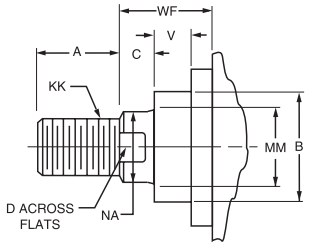

Thread Style 3

Short Female

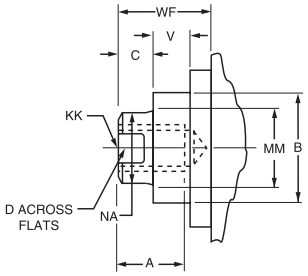

Thread Style 4

Intermediate Male

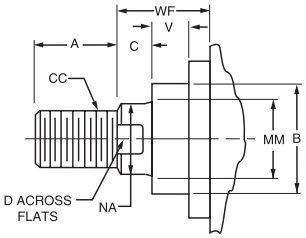

A high strength rod end stud is supplied on thread style 2 through 2" diameter rods. Larger sizes or special rod ends are cut threads. Style 2 rod ends are recommended where the workpiece is secured against the rod shoulder. When the workpiece is not shouldered, style 2 rod ends are recommended through 2" piston rod diameters and style 4 rod ends are recommended on larger diameters. Use style 3 for applications where female rod end threads are required. If rod end is not specified, style 2 will be supplied.

"Special" Thread Style 0

Special thread, extension, rod eye, blank, etc., are also available.

To order, specify "Style 0" and give desired dimensions for KK, A, W or WF. If otherwise special, furnish dimensioned sketch.

Table 1—Envelope and Mounting Dimensions

Bore	E	EB	EE NPTF	F	G	J	K	TE	Add Stroke LB	Add Stroke P
7	7 1/2	9/16	3/4	3/4	2	1 1/2	9/16	6.75	5 7/8	3 1/4
8	8 1/2	11/16	3/4	3/4	2	1 1/2	9/16	7.57	5 7/8	3 1/4
10	10 5/8	13/16	1	3/4	2 1/4	2	11/16	9.40	7 1/8	4 1/8
12	12 3/4	13/16	1	3/4	2 1/4	2	11/16	11.10	7 5/8	4 5/8
14	14 3/4	15/16	1 1/4	3/4	2 3/4	2 1/4	3/4	12.87	8 7/8	5 1/2

Table 2—Rod End Dimensions and Envelope Dimensions Affected By Rod Size

Bore	Rod Dia. MM	Thread Style 4 CC	Thread Style 2 & 3 KK	A	+.000 -.002 B	C	D	NA	TT	V	W	WF	Y	Add Stroke XK	Add Stroke ZB	Add Stroke ZJ
7	1 3/8	1 1/4-12	1-14	1 5/8	1.999	5/8	1 1/8	1 5/16	4	1/4	7/8	1 5/8	2 13/16	5 1/4	7 5/16	6 3/4
	1 3/4	1 1/2-12	1 1/4-12	2	2.374	3/4	1 1/2	1 11/16	4	3/8	1 1/8	1 7/8	3 1/16	5 1/2	7 9/16	7
	2	1 3/4-12	1 1/2-12	2 1/4	2.624	7/8	1 11/16	1 15/16	4	3/8	1 1/4	2	3 3/16	5 7/8	7 11/16	7 1/8
8	1 3/8	1 1/4-12	1-14	1 5/8	1.999	5/8	1 1/8	1 5/16	4	1/4	7/8	1 5/8	2 13/16	5 1/4	7 5/16	6 3/4
	5 1/2	5 1/4-12	4-12	5 1/2	6.249	1	4 5/8	5 3/8	7	1/2	1 1/2	2 1/4	3 7/16	5 7/8	7 15/16	7 3/8
	1 3/4	1 1/2-12	1 1/4-12	2	2.374	3/4	1 1/2	1 11/16	4	3/8	1 1/8	1 7/8	3 1/16	5 1/2	7 9/16	7
	2	1 3/4-12	1 1/2-12	2 1/4	2.624	7/8	1 11/16	1 15/16	4	3/8	1 1/4	2	3 3/16	5 5/8	7 11/16	7 1/8
	2 1/2	2 1/4-12	1 7/8-12	3	3.124	1	2 1/16	2 3/8	4	1/2	1 1/2	2 1/4	3 7/16	5 7/8	7 15/16	7 3/8
	3	2 3/4-12	2 1/4-12	3 1/2	3.749	1	2 5/8	2 7/8	5 1/2	1/2	1 1/2	2 1/4	3 7/16	5 7/8	7 15/16	7 3/8
	3 1/2	3 1/4-12	2 1/2-12	3 1/2	4.249	1	3	3 3/8	5 1/2	1/2	1 1/2	2 1/4	3 7/16	5 7/8	7 15/16	7 3/8
	4	3 3/4-12	3-12	4	4.749	1	3 3/8	3 7/8	5 1/2	1/2	1 1/2	2 1/4	3 7/16	5 7/8	7 15/16	7 3/8
	4 1/2	4 1/4-12	3 1/4-12	4 1/2	5.249	1	3 7/8	4 3/8	7	1/2	1 1/2	2 1/4	3 7/16	5 7/8	7 15/16	7 3/8
	5	4 3/4-12	3 1/2-12	5	5.749	1	4 1/4	4 7/8	7	1/2	1 1/2	2 1/4	3 7/16	5 7/8	7 15/16	7 3/8
10	1 3/4	1 1/2-12	1 1/4-12	2	2.374	3/4	1 1/2	1 11/16	4	3/8	1 1/8	1 7/8	3 1/8	6 1/4	8 15/16	8 1/4
	2	1 3/4-12	1 1/2-12	2 1/4	2.624	7/8	1 11/16	1 15/16	4	3/8	1 1/4	2	3 1/4	6 3/8	9 1/16	8 3/8
	2 1/2	2 1/4-12	1 7/8-12	3	3.124	1	2 1/16	2 3/8	4	1/2	1 1/2	2 1/4	3 1/2	6 5/8	9 5/16	8 5/8
	3	2 3/4-12	2 1/4-12	3 1/2	3.749	1	2 5/8	2 7/8	5 1/2	1/2	1 1/2	2 1/4	3 1/2	6 5/8	9 5/16	8 5/8
	3 1/2	3 1/4-12	2 1/2-12	3 1/2	4.249	1	3	3 3/8	5 1/2	1/2	1 1/2	2 1/4	3 1/2	6 5/8	9 5/16	8 5/8
	4	3 3/4-12	3-12	4	4.749	1	3 3/8	3 7/8	5 1/2	1/2	1 1/2	2 1/4	3 1/2	6 5/8	9 5/16	8 5/8
	4 1/2	4 1/4-12	3 1/4-12	4 1/2	5.249	1	3 7/8	4 3/8	7	1/2	1 1/2	2 1/4	3 1/2	6 5/8	9 5/16	8 5/8
	5	4 3/4-12	3 1/2-12	5	5.749	1	4 1/4	4 7/8	7	1/2	1 1/2	2 1/4	3 1/2	6 5/8	9 5/16	8 5/8
	5 1/2	5 1/4-12	4-12	5 1/2	6.249	1	4 5/8	5 3/8	7	1/2	1 1/2	2 1/4	3 1/2	6 5/8	9 5/16	8 5/8
12	2	1 3/4-12	1 1/2-12	2 1/4	2.624	7/8	1 11/16	1 15/16	4	3/8	1 1/4	2	3 1/4	6 7/8	9 9/16	8 7/8
	2 1/2	2 1/4-12	1 7/8-12	3	3.124	1	2 1/16	2 3/8	4	1/2	1 1/2	2 1/4	3 1/2	7 1/8	9 13/16	9 1/8
	3	2 3/4-12	2 1/4-12	3 1/2	3.749	1	2 5/8	2 7/8	5 1/2	1/2	1 1/2	2 1/4	3 1/2	7 1/8	9 13/16	9 1/8
	3 1/2	3 1/4-12	2 1/2-12	3 1/2	4.249	1	3	3 3/8	5 1/2	1/2	1 1/2	2 1/4	3 1/2	7 1/8	9 13/16	9 1/8
	4	3 3/4-12	3-12	4	4.749	1	3 3/8	3 7/8	5 1/2	1/2	1 1/2	2 1/4	3 1/2	7 1/8	9 13/16	9 1/8
	4 1/2	4 1/4-12	3 1/4-12	4 1/2	5.249	1	3 7/8	4 3/8	7	1/2	1 1/2	2 1/4	3 1/2	7 1/8	9 13/16	9 1/8
	5	4 3/4-12	3 1/2-12	5	5.749	1	4 1/4	4 7/8	7	1/2	1 1/2	2 1/4	3 1/2	7 1/8	9 13/16	9 1/8
	5 1/2	5 1/4-12	4-12	5 1/2	6.249	1	4 5/8	5 3/8	7	1/2	1 1/2	2 1/4	3 1/2	7 1/8	9 13/16	9 1/8
14	2 1/2	2 1/4-12	1 7/8-12	3	3.124	1	2 1/16	2 3/8	4	1/2	1 1/2	2 1/4	3 13/16	8 1/8	11 1/8	10 3/8
	3	2 3/4-12	2 1/4-12	3 1/2	3.749	1	2 5/8	2 7/8	5 1/2	1/2	1 1/2	2 1/4	3 13/16	8 1/8	11 1/8	10 3/8
	3 1/2	3 1/4-12	2 1/2-12	3 1/2	4.249	1	3	3 3/8	5 1/2	1/2	1 1/2	2 1/4	3 13/16	8 1/8	11 1/8	10 3/8
	4	3 3/4-12	3-12	4	4.749	1	3 3/8	3 7/8	5 1/2	1/2	1 1/2	2 1/4	3 13/16	8 1/8	11 1/8	10 3/8
	4 1/2	4 1/4-12	3 1/4-12	4 1/2	5.249	1	3 7/8	4 3/8	7	1/2	1 1/2	2 1/4	3 13/16	8 1/8	11 1/8	10 3/8
	5	4 3/4-12	3 1/2-12	5	5.749	1	4 1/4	4 7/8	7	1/2	1 1/2	2 1/4	3 13/16	8 1/8	11 1/8	10 3/8
	5 1/2	5 1/4-12	4-12	5 1/2	6.249	1	4 5/8	5 3/8	7	1/2	1 1/2	2 1/4	3 13/16	8 1/8	11 1/8	10 3/8

Head Trunnion Mount
Style MT1
7" - 14" Bore

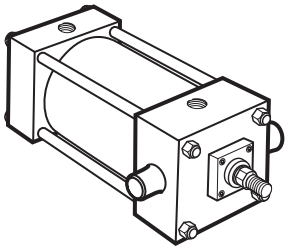

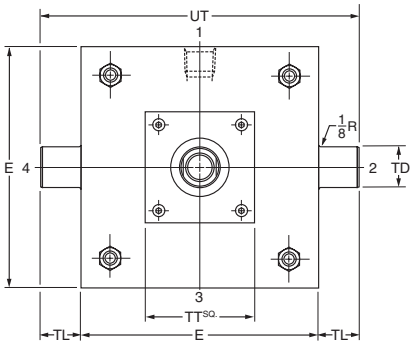

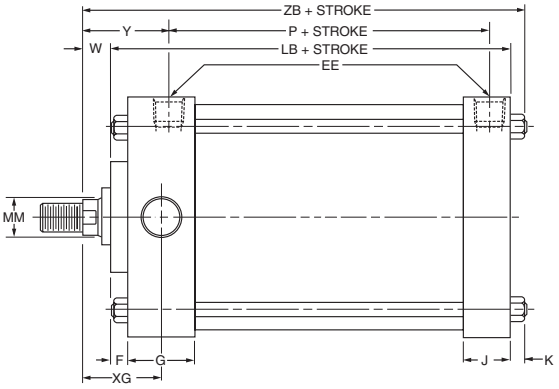

Cap Trunnion Mount
Style MT2
7" - 14" Bore

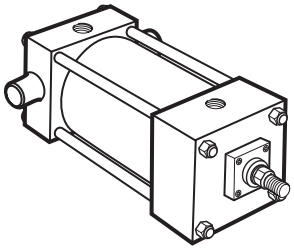

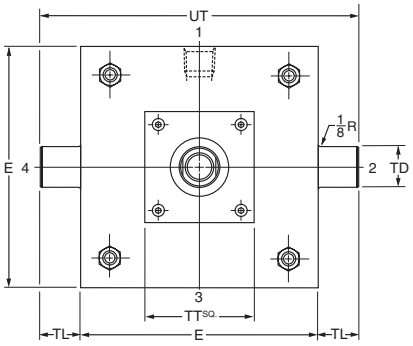

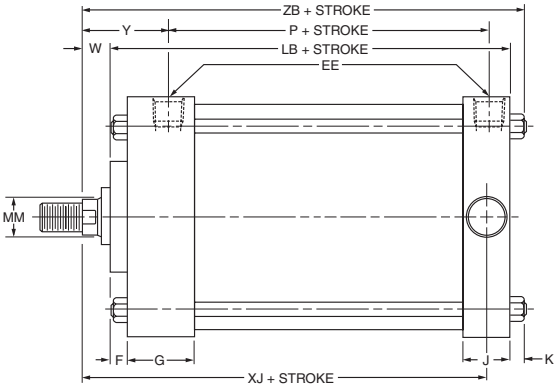

Intermediate Fixed Trunnion Mount
Model MT4
8" - 14" Bore

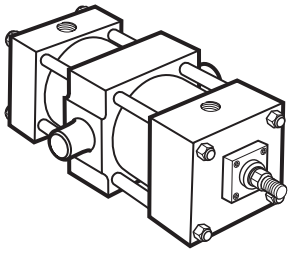

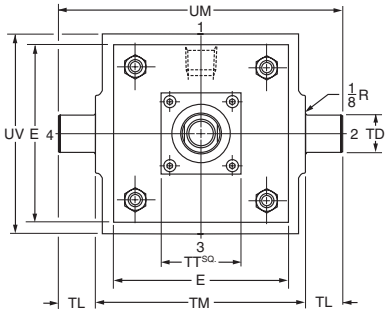

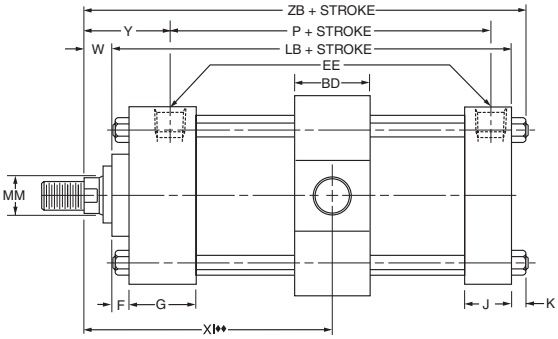

♦♦Dimension XI to be specified by customer.

Rod End Dimensions — see table 2

Thread Style 2
Small Male

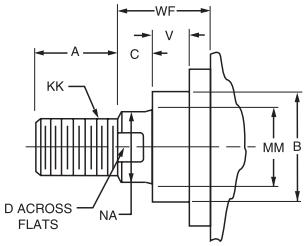

Thread Style 3
Short Female

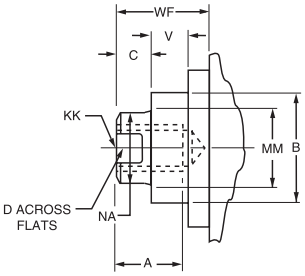

Thread Style 4
Intermediate Male

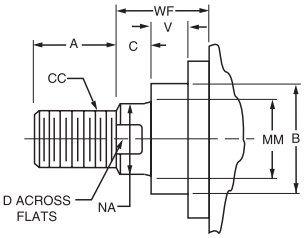

"Special" Thread Style 0
Special thread, extension, rod eye, blank, etc., are also available.

To order, specify "Style 0" and give desired dimensions for KK, A, W or WF. If otherwise special, furnish dimensioned sketch.

A high strength rod end stud is supplied on thread style 2 through 2" diameter rods. Larger sizes or special rod ends are cut threads. Style 2 rod ends are recommended where the workpiece is secured against the rod shoulder. When the workpiece is not shouldered, style 2 rod ends are recommended through 2" piston rod diameters and style 4 rod ends are recommended on larger diameters. Use style 3 for applications where female rod end threads are required. If rod end is not specified, style 2 will be supplied.

Table 1—Envelope and Mounting Dimensions

Bore	BD	E	EE NPTF	F	G	J	K	+.000 -.001 TD	TL	TM	UT	UM	UV	Add Stroke LB	Add Stroke P
7	–	7 1/2	3/4	3/4	2	1 1/2	9/16	1.375	1 3/8	–	10 1/4	–	–	5 7/8	3 1/4
8	2 1/2	8 1/2	3/4	3/4	2	1 1/2	9/16	1.375	1 3/8	9 3/4	11 1/4	12 1/2	9 1/2	5 7/8	3 1/4
10	3	10 5/8	1	3/4	2 1/4	2	11/16	1.750	1 3/4	12	14 1/8	15 1/2	11 3/4	7 1/8	4 1/8
12	3	12 3/4	1	3/4	2 1/4	2	11/16	1.750	1 3/4	14	16 1/4	17 1/2	13 3/4	7 5/8	4 5/8
14	3 1/2	14 3/4	1 1/4	3/4	2 3/4	2 1/4	3/4	2.000	2	16 1/4	18 3/4	20 1/4	16	8 7/8	5 1/2

Table 2—Rod End Dimensions and Envelope Dimensions Affected By Rod Size

Bore	Rod Dia. MM	Thread Style 4 CC	Thread Style 2 & 3 KK	A	+.000 -.002 B	C	D	NA	TT	V	W	XG	XI* (Min.)	Y	Add Stroke XJ	Add Stroke ZB
7	1 3/8	1 1/4-12	1-14	1 5/8	1.999	5/8	1 1/8	1 5/16	4	1/4	7/8	2 5/8	–	2 13/16	6	7 5/16
	1 3/4	1 1/2-12	1 1/4-12	2	2.374	3/4	1 1/2	1 11/16	4	3/8	1 1/8	2 7/8	–	3 1/16	6 1/4	7 9/16
	2	1 3/4-12	1 1/2-12	2 1/4	2.624	7/8	1 11/16	1 15/16	4	3/8	1 1/4	3	–	3 3/16	6 3/8	7 11/16
8	1 3/8	1 1/4-12	1-14	1 5/8	1.999	5/8	1 1/8	1 5/16	4	1/4	7/8	2 5/8	4 15/16	2 13/16	6	7 5/16
	5 1/2	5 1/4-12	4-12	5 1/2	6.249	1	4 5/8	5 3/8	7	1/2	1 1/2	3 1/4	5 9/16	3 7/16	6 5/8	7 15/16
	1 3/4	1 1/2-12	1 1/4-12	2	2.374	3/4	1 1/2	1 11/16	4	3/8	1 1/8	2 7/8	5 3/16	3 1/16	6 1/4	7 9/16
	2	1 3/4-12	1 1/2-12	2 1/4	2.624	7/8	1 11/16	1 15/16	4	3/8	1 1/4	3	5 5/16	3 3/16	6 3/8	7 11/16
	2 1/2	2 1/4-12	1 7/8-12	3	3.124	1	2 1/16	2 3/8	4	1/2	1 1/2	3 1/4	5 9/16	3 7/16	6 5/8	7 15/16
	3	2 3/4-12	2 1/4-12	3 1/2	3.749	1	2 5/8	2 7/8	5 1/2	1/2	1 1/2	3 1/4	5 3/16	3 7/16	6 5/8	7 15/16
	3 1/2	3 1/4-12	2 1/2-12	3 1/2	4.249	1	3	3 3/8	5 1/2	1/2	1 1/2	3 1/4	5 9/16	3 7/16	6 5/8	7 15/16
	4	3 3/4-12	3-12	4	4.749	1	3 3/8	3 7/8	5 1/2	1/2	1 1/2	3 1/4	5 9/16	3 7/16	6 5/8	7 15/16
	4 1/2	4 1/4-12	3 1/4-12	4 1/2	5.249	1	3 7/8	4 3/8	7	1/2	1 1/2	3 1/4	5 9/16	3 7/16	6 5/8	7 15/16
	5	4 3/4-12	3 1/2-12	5	5.749	1	4 1/4	4 7/8	7	1/2	1 1/2	3 1/4	5 9/16	3 7/16	6 5/8	7 15/16
10	1 3/4	1 1/2-12	1 1/4-12	2	2.374	3/4	1 1/2	1 11/16	4	3/8	1 1/8	3	5 11/16	3 1/8	7 1/4	8 15/16
	2	1 3/4-12	1 1/2-12	2 1/4	2.624	7/8	1 11/16	1 15/16	4	3/8	1 1/4	3 1/8	5 13/16	3 1/4	7 3/8	9 1/16
	2 1/2	2 1/4-12	1 7/8-12	3	3.124	1	2 1/16	2 3/8	4	1/2	1 1/2	3 3/8	6 1/16	3 1/2	7 5/8	9 5/16
	3	2 3/4-12	2 1/4-12	3 1/2	3.749	1	2 5/8	2 7/8	5 1/2	1/2	1 1/2	3 3/8	6 1/16	3 1/2	7 5/8	9 5/16
	3 1/2	3 1/4-12	2 1/2-12	3 1/2	4.249	1	3	3 3/8	5 1/2	1/2	1 1/2	3 3/8	6 1/16	3 1/2	7 5/8	9 5/16
	4	3 3/4-12	3-12	4	4.749	1	3 3/8	3 7/8	5 1/2	1/2	1 1/2	3 3/8	6 1/16	3 1/2	7 5/8	9 5/16
	4 1/2	4 1/4-12	3 1/4-12	4 1/2	5.249	1	3 7/8	4 3/8	7	1/2	1 1/2	3 3/8	6 1/16	3 1/2	7 5/8	9 5/16
	5	4 3/4-12	3 1/2-12	5	5.749	1	4 1/4	4 7/8	7	1/2	1 1/2	3 3/8	6 1/16	3 1/2	7 5/8	9 5/16
	5 1/2	5 1/4-12	4-12	5 1/2	6.249	1	4 5/8	5 3/8	7	1/2	1 1/2	3 3/8	6 1/16	3 1/2	7 5/8	9 5/16
12	2	1 3/4-12	1 1/2-12	2 1/4	2.624	7/8	1 11/16	1 15/16	4	3/8	1 1/4	3 1/8	5 13/16	3 1/4	7 7/8	9 9/16
	2 1/2	2 1/4-12	1 7/8-12	3	3.124	1	2 1/16	2 3/8	4	1/2	1 1/2	3 3/8	6 1/16	3 1/2	8 1/8	9 13/16
	3	2 3/4-12	2 1/4-12	3 1/2	3.749	1	2 5/8	2 7/8	5 1/2	1/2	1 1/2	3 3/8	6 1/16	3 1/2	8 1/8	9 13/16
	3 1/2	3 1/4-12	2 1/2-12	3 1/2	4.249	1	3	3 3/8	5 1/2	1/2	1 1/2	3 3/8	6 1/16	3 1/2	8 1/8	9 13/16
	4	3 3/4-12	3-12	4	4.749	1	3 3/8	3 7/8	5 1/2	1/2	1 1/2	3 3/8	6 1/16	3 1/2	8 1/8	9 13/16
	4 1/2	4 1/4-12	3 1/4-12	4 1/2	5.249	1	3 7/8	4 3/8	7	1/2	1 1/2	3 3/8	6 1/16	3 1/2	8 1/8	9 13/16
	5	4 3/4-12	3 1/2-12	5	5.749	1	4 1/4	4 7/8	7	1/2	1 1/2	3 3/8	6 1/16	3 1/2	8 1/8	9 13/16
	5 1/2	5 1/4-12	4-12	5 1/2	6.249	1	4 5/8	5 3/8	7	1/2	1 1/2	3 3/8	6 1/16	3 1/2	8 1/8	9 13/16
14	2 1/2	2 1/4-12	1 7/8-12	3	3.124	1	2 1/16	2 3/8	4	1/2	1 1/2	3 5/8	6 13/16	3 13/16	9 1/4	11 1/8
	3	2 3/4-12	2 1/4-12	3 1/2	3.749	1	2 5/8	2 7/8	5 1/2	1/2	1 1/2	3 5/8	6 13/16	3 13/16	9 1/4	11 1/8
	3 1/2	3 1/4-12	2 1/2-12	3 1/2	4.249	1	3	3 3/8	5 1/2	1/2	1 1/2	3 5/8	6 13/16	3 13/16	9 1/4	11 1/8
	4	3 3/4-12	3-12	4	4.749	1	3 3/8	3 7/8	5 1/2	1/2	1 1/2	3 5/8	6 13/16	3 13/16	9 1/4	11 1/8
	4 1/2	4 1/4-12	3 1/4-12	4 1/2	5.249	1	3 7/8	4 3/8	7	1/2	1 1/2	3 5/8	6 13/16	3 13/16	9 1/4	11 1/8
	5	4 3/4-12	3 1/2-12	5	5.749	1	4 1/4	4 7/8	7	1/2	1 1/2	3 5/8	6 13/16	3 13/16	9 1/4	11 1/8
	5 1/2	5 1/4-12	4-12	5 1/2	6.249	1	4 5/8	5 3/8	7	1/2	1 1/2	3 5/8	6 13/16	3 13/16	9 1/4	11 1/8

* Dimension XI to be specified by customer.

Cap Fixed Clevis Mount

Style MP1
7" - 14" Bore

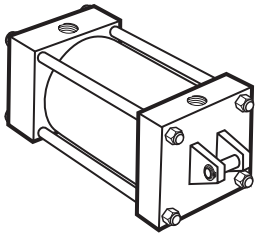

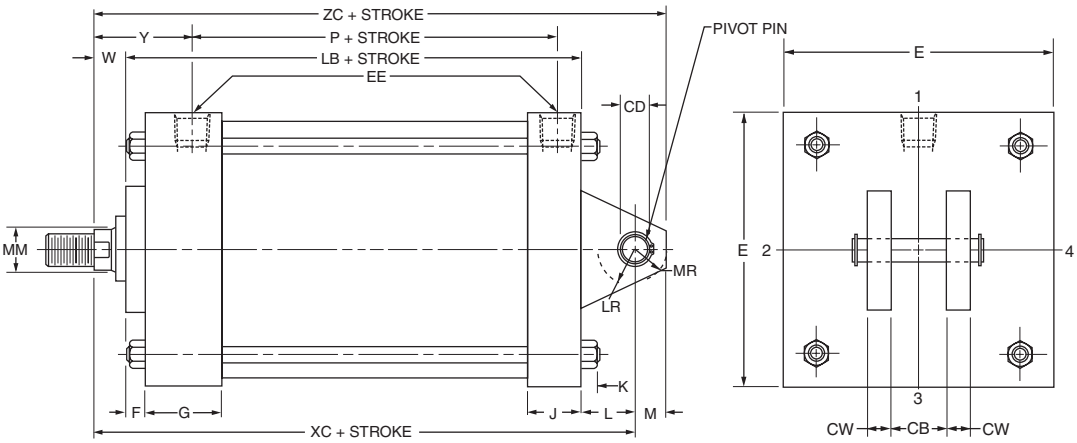

Tie Rod Extended Mount

Style MX3
7" - 14" Bore

Model MX3 Head Tie Rods Extended, Illustrated. Model MX2 Cap Tie Rods Extended; and Model MX1, Both Ends Tie Rods Extended are also available. All Tie Rod Models can be dimensioned from Model MX3 drawing at right.

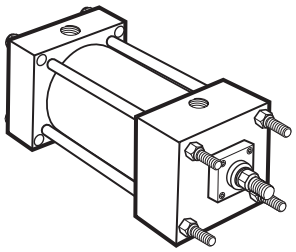

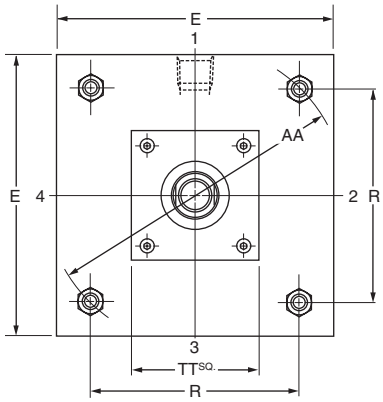

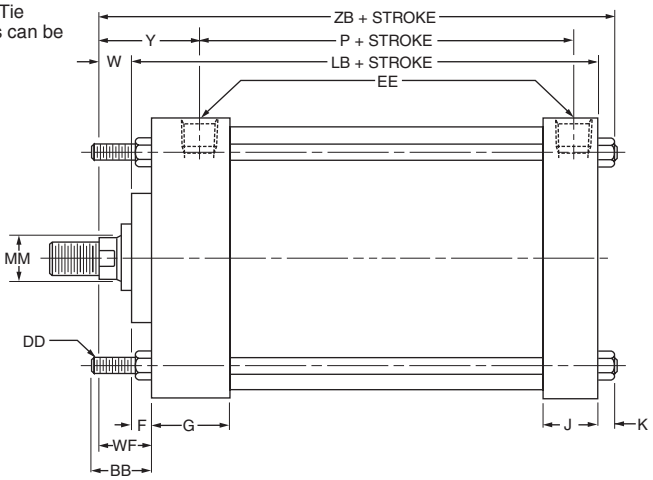

Models MX3 and MX1 not offered in 8" bore, rod diameters 4 1/2", 5" and 5 1/2".

Rod End Dimensions — see table 2

Thread Style 2

Small Male

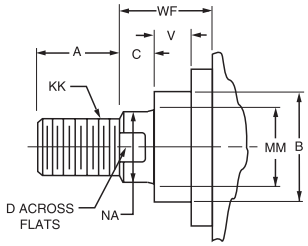

Thread Style 3

Short Female

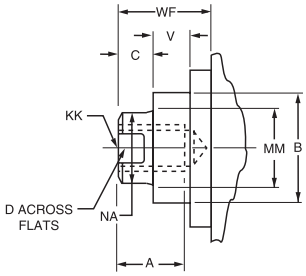

Thread Style 4

Intermediate Male

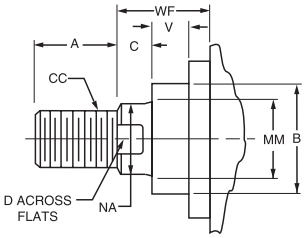

"Special" Thread Style 0

Special thread, extension, rod eye, blank, etc., are also available.

To order, specify "Style 0" and give desired dimensions for KK, A, W or WF. If otherwise special, furnish dimensioned sketch.

A high strength rod end stud is supplied on thread style 2 through 2" diameter rods. Larger sizes or special rod ends are cut threads. Style 2 rod ends are recommended where the workpiece is secured against the rod shoulder. When the workpiece is not shouldered, style 2 rod ends are recommended through 2" piston rod diameters and style 4 rod ends are recommended on larger diameters. Use style 3 for applications where female rod end threads are required. If rod end is not specified, style 2 will be supplied.

Table 1—Envelope and Mounting Dimensions

Bore	AA	BB	CB	+.000 -.002 CD*	CW	DD	E	EE NPTF	F	G	J	K	L	LR	M	MR	R	Add Stroke LB	Add Stroke P
7	8.1	2 5/16	1 1/2	1.001	3/4	5/8-18	7 1/2	3/4	3/4	2	1 1/2	9/16	1 1/2	1 1/4	1	1 3/16	5.73	5 7/8	3 1/4
8	9.1	2 5/16	1 1/2	1.001	3/4	5/8-18	8 1/2	3/4	3/4	2	1 1/2	9/16	1 1/2	1 1/4	1	1 3/16	6.44	5 7/8	3 1/4
10	11.2	2 11/16	2	1.376	1	3/4-16	10 5/8	1	3/4	2 1/4	2	11/16	2 1/8	1 7/8	1 3/8	1 5/8	7.92	7 1/8	4 1/8
12	13.3	2 11/16	2 1/2	1.751	1 1/4	3/4-16	12 3/4	1	3/4	2 1/4	2	11/16	2 1/4	2 1/8	1 3/4	2 1/8	9.40	7 5/8	4 5/8
14	15.4	3 3/16	2 1/2	2.001	1 1/4	7/8-14	14 3/4	1 1/4	3/4	2 3/4	2 1/4	3/4	2 1/2	2 3/8	2	2 3/8	10.90	8 7/8	5 1/2

* CD is pin diameter.

Table 2—Rod End Dimensions and Envelope Dimensions Affected By Rod Size

Bore	Rod Dia. MM	Thread Style 4 CC	Thread Style 2 & 3 KK	A	+.000 -.002 B	C	D	NA	TT	V	W	WF	XC	Y	Add Stroke ZB	Add Stroke ZC
7	1 3/8	1 1/4-12	1-14	1 5/8	1.999	5/8	1 1/8	1 5/16	4	1/4	7/8	1 5/8	8 1/4	2 13/16	7 5/16	9 1/4
	1 3/4	1 1/2-12	1 1/4-12	2	2.374	3/4	1 1/2	1 11/16	4	3/8	1 1/8	1 7/8	8 1/2	3 1/16	7 9/16	9 1/2
	2	1 3/4-12	1 1/2-12	2 1/4	2.624	7/8	1 11/16	1 15/16	4	3/8	1 1/4	2	8 5/8	3 3/16	7 11/16	9 5/8
8	1 3/8	1 1/4-12	1-14	1 5/8	1.999	5/8	1 1/8	1 5/16	4	1/4	7/8	1 5/8	8 1/4	2 13/16	7 5/16	9 1/4
	5 1/2	5 1/4-12	4-12	5 1/2	6.249	1	4 5/8	5 3/8	7	1/2	1 1/2	2 1/4	8 7/8	3 7/16	7 15/16	9 7/8
	1 3/4	1 1/2-12	1 1/4-12	2	2.374	3/4	1 1/2	1 11/16	4	3/8	1 1/8	1 7/8	8 1/2	3 1/16	7 9/16	9 1/2
	2	1 3/4-12	1 1/2-12	2 1/4	2.624	7/8	1 11/16	1 15/16	4	3/8	1 1/4	2	8 5/8	3 3/16	7 11/16	9 5/8
	2 1/2	2 1/4-12	1 7/8-12	3	3.124	1	2 1/16	2 3/8	4	1/2	1 1/2	2 1/4	8 7/8	3 7/16	7 15/16	9 7/8
	3	2 3/4-12	2 1/4-12	3 1/2	3.749	1	2 5/8	2 7/8	5 1/2	1/2	1 1/2	2 1/4	8 7/8	3 7/16	7 15/16	9 7/8
	3 1/2	3 1/4-12	2 1/2-12	3 1/2	4.249	1	3	3 3/8	5 1/2	1/2	1 1/2	2 1/4	8 7/8	3 7/16	7 15/16	9 7/8
	4	3 3/4-12	3-12	4	4.749	1	3 3/8	3 7/8	5 1/2	1/2	1 1/2	2 1/4	8 7/8	3 7/16	7 15/16	9 7/8
	4 1/2	4 1/4-12	3 1/4-12	4 1/2	5.249	1	3 7/8	4 3/8	7	1/2	1 1/2	2 1/4	8 7/8	3 7/16	7 15/16	9 7/8
	5	4 3/4-12	3 1/2-12	5	5.749	1	4 1/4	4 7/8	7	1/2	1 1/2	2 1/4	8 7/8	3 7/16	7 15/16	9 7/8
10	1 3/4	1 1/2-12	1 1/4-12	2	2.374	3/4	1 1/2	1 11/16	4	3/8	1 1/8	1 7/8	10 3/8	3 1/8	8 15/16	11 3/4
	2	1 3/4-12	1 1/2-12	2 1/4	2.624	7/8	1 11/16	1 15/16	4	3/8	1 1/4	2	10 1/2	3 1/4	9 1/16	11 7/8
	2 1/2	2 1/4-12	1 7/8-12	3	3.124	1	2 1/16	2 3/8	4	1/2	1 1/2	2 1/4	10 3/4	3 1/2	9 5/16	12 1/8
	3	2 3/4-12	2 1/4-12	3 1/2	3.749	1	2 5/8	2 7/8	5 1/2	1/2	1 1/2	2 1/4	10 3/4	3 1/2	9 5/16	12 1/8
	3 1/2	3 1/4-12	2 1/2-12	3 1/2	4.249	1	3	3 3/8	5 1/2	1/2	1 1/2	2 1/4	10 3/4	3 1/2	9 5/16	12 1/8
	4	3 3/4-12	3-12	4	4.749	1	3 3/8	3 7/8	5 1/2	1/2	1 1/2	2 1/4	10 3/4	3 1/2	9 5/16	12 1/8
	4 1/2	4 1/4-12	3 1/4-12	4 1/2	5.249	1	3 7/8	4 3/8	7	1/2	1 1/2	2 1/4	10 3/4	3 1/2	9 5/16	12 1/8
	5	4 3/4-12	3 1/2-12	5	5.749	1	4 1/4	4 7/8	7	1/2	1 1/2	2 1/4	10 3/4	3 1/2	9 5/16	12 1/8
	5 1/2	5 1/4-12	4-12	5 1/2	6.249	1	4 5/8	5 3/8	7	1/2	1 1/2	2 1/4	10 3/4	3 1/2	9 5/16	12 1/8
12	2	1 3/4-12	1 1/2-12	2 1/4	2.624	7/8	1 11/16	1 15/16	4	3/8	1 1/4	2	11 1/8	3 1/4	9 9/16	12 7/8
	2 1/2	2 1/4-12	1 7/8-12	3	3.124	1	2 1/16	2 3/8	4	1/2	1 1/2	2 1/4	11 3/8	3 1/2	9 13/16	13 1/8
	3	2 3/4-12	2 1/4-12	3 1/2	3.749	1	2 5/8	2 7/8	5 1/2	1/2	1 1/2	2 1/4	11 3/8	3 1/2	9 13/16	13 1/8
	3 1/2	3 1/4-12	2 1/2-12	3 1/2	4.249	1	3	3 3/8	5 1/2	1/2	1 1/2	2 1/4	11 3/8	3 1/2	9 13/16	13 1/8
	4	3 3/4-12	3-12	4	4.749	1	3 3/8	3 7/8	5 1/2	1/2	1 1/2	2 1/4	11 3/8	3 1/2	9 13/16	13 1/8
	4 1/2	4 1/4-12	3 1/4-12	4 1/2	5.249	1	3 7/8	4 3/8	7	1/2	1 1/2	2 1/4	11 3/8	3 1/2	9 13/16	13 1/8
	5	4 3/4-12	3 1/2-12	5	5.749	1	4 1/4	4 7/8	7	1/2	1 1/2	2 1/4	11 3/8	3 1/2	9 13/16	13 1/8
	5 1/2	5 1/4-12	4-12	5 1/2	6.249	1	4 5/8	5 3/8	7	1/2	1 1/2	2 1/4	11 3/8	3 1/2	9 13/16	13 1/8
14	2 1/2	2 1/4-12	1 7/8-12	3	3.124	1	2 1/16	2 3/8	4	1/2	1 1/2	2 1/4	12 7/8	3 13/16	11 1/8	14 7/8
	3	2 3/4-12	2 1/4-12	3 1/2	3.749	1	2 5/8	2 7/8	5 1/2	1/2	1 1/2	2 1/4	12 7/8	3 13/16	11 1/8	14 7/8
	3 1/2	3 1/4-12	2 1/2-12	3 1/2	4.249	1	3	3 3/8	5 1/2	1/2	1 1/2	2 1/4	12 7/8	3 13/16	11 1/8	14 7/8
	4	3 3/4-12	3-12	4	4.749	1	3 3/8	3 7/8	5 1/2	1/2	1 1/2	2 1/4	12 7/8	3 13/16	11 1/8	14 7/8
	4 1/2	4 1/4-12	3 1/4-12	4 1/2	5.249	1	3 7/8	4 3/8	7	1/2	1 1/2	2 1/4	12 7/8	3 13/16	11 1/8	14 7/8
	5	4 3/4-12	3 1/2-12	5	5.749	1	4 1/4	4 7/8	7	1/2	1 1/2	2 1/4	12 7/8	3 13/16	11 1/8	14 7/8
	5 1/2	5 1/4-12	4-12	5 1/2	6.249	1	4 5/8	5 3/8	7	1/2	1 1/2	2 1/4	12 7/8	3 13/16	11 1/8	14 7/8

Spherical Bearing Mount

Style MPU3
1 1/2" - 6" Bore

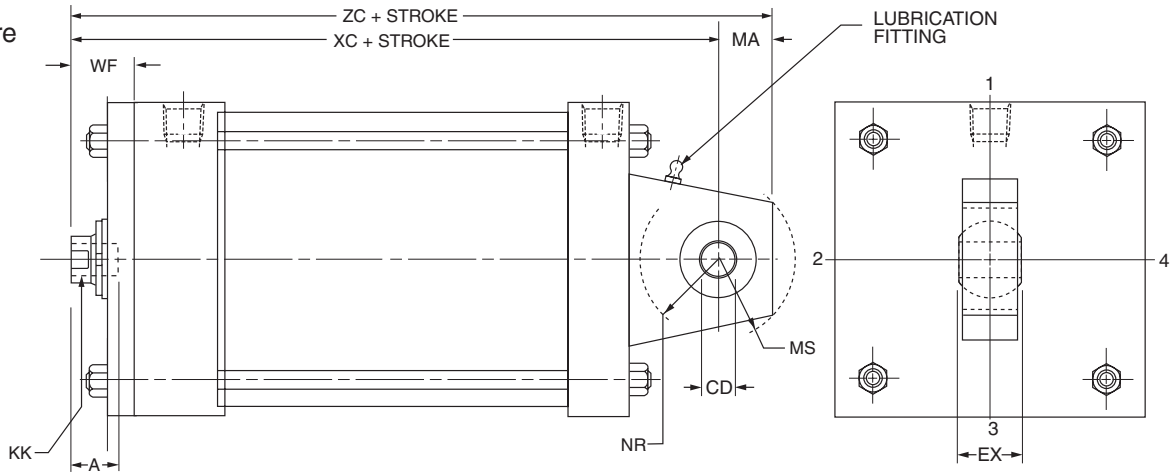

Bore	Rod Dia. MM	Thread Style 3 KK[3]	Thread Style 7 KK[3]	A	CD[2]	EX	MA	MS	NR	WF	Add Stroke XC	Add Stroke ZC	Max. Oper. psi[1] PA-2
1½	5/8	7/16-20	—	3/4	-.0005 .5000	7/16	3/4	15/16	5/8	1	5 3/8	6 1/8	250
	1	—	7/16-20	3/4						1 3/8	5 3/4	6 1/2	
2	5/8	7/16-20	—	3/4	-.0005 .5000	7/16	3/4	15/16	5/8	1	5 3/8	6 1/8	250
	1 3/8	—	7/16-20	3/4						1 5/8	6	6 3/4	
	1	—	7/16-20	3/4						1 3/8	5 3/4	6 1/2	
2½	5/8	7/16-20	—	3/4	-.0005 .5000	7/16	3/4	15/16	5/8	1	5 1/2	6 1/4	250
	1 3/4	—	7/16-20	3/4						1 7/8	6 3/8	7 1/8	
	1	—	7/16-20	3/4						1 3/8	5 7/8	6 5/8	
	1 3/8	—	7/16-20	3/4						1 5/8	6 1/8	6 7/8	
3¼	1	3/4-16	—	1 1/8	-.0005 .7500	21/32	1	1 3/8	1	1 3/8	6 7/8	7 7/8	250
	2	—	3/4-16	1 1/8						2	7 1/2	8 1/2	
	1 3/8	—	3/4-16	1 1/8						1 5/8	7 1/8	8 1/8	
	1 3/4	—	3/4-16	1 1/8						1 7/8	7 3/8	8 3/8	
4	1	3/4-16	—	1 1/8	-.0005 .7500	21/32	1	1 3/8	1	1 3/8	6 7/8	7 7/8	250
	2 1/2	—	3/4-16	1 1/8						2 1/4	7 3/4	8 3/4	
	1 3/8	—	3/4-16	1 1/8						1 5/8	7 1/8	8 1/8	
	1 3/4	—	3/4-16	1 1/8						1 7/8	7 3/8	8 3/8	
	2	—	3/4-16	1 1/8						2	7 1/2	8 1/2	
5	1	3/4-16	—	1 1/8	-.0005 .7500	21/32	1	1 3/8	1	1 3/8	7 1/8	8 1/8	250
	3 1/2	—	3/4-16	1 1/8						2 1/4	8	9	
	1 3/8	—	3/4-16	1 1/8						1 5/8	7 3/8	8 3/8	
	1 3/4	—	3/4-16	1 1/8						1 7/8	7 5/8	8 5/8	
	2	—	3/4-16	1 1/8						2	7 3/4	8 3/4	
	2 1/2	—	3/4-16	1 1/8						2 1/4	8	9	
	3	—	3/4-16	1 1/8						2 1/4	8	9	
6	1 3/8	1-14	—	1 5/8	-.0005 1.0000	7/8	1 1/4	1 11/16	1 1/4	1 5/8	8 1/8	9 3/8	250
	4	—	1-14	1 5/8						2 1/4	8 3/4	10	
	1 3/4	—	1-14	1 5/8						1 7/8	8 3/8	9 5/8	
	2	—	1-14	1 5/8						2	8 1/2	9 3/4	
	2 1/2	—	1-14	1 5/8						2 1/4	8 3/4	10	
	3	—	1-14	1 5/8						2 1/4	8 3/4	10	
	3 1/2	—	1-14	1 5/8						2 1/4	8 3/4	10	

[1] Maximum operating pressure at 4:1 design factor is based on tensile strength of material. Pressure ratings are based on standard commercial bearing ratings.

[2] Dimension CD is hole diameter.

[3] Threads listed are also for a spherical rod eye which match style 9 or style 7. The spherical rod eye pin diameter matches the cap pin and (if required) needs to be purchased separately; see PA-2 mounting accessories for detailed information.

Spherical Bearing Mount

Style MPU3
8" - 14" Bore

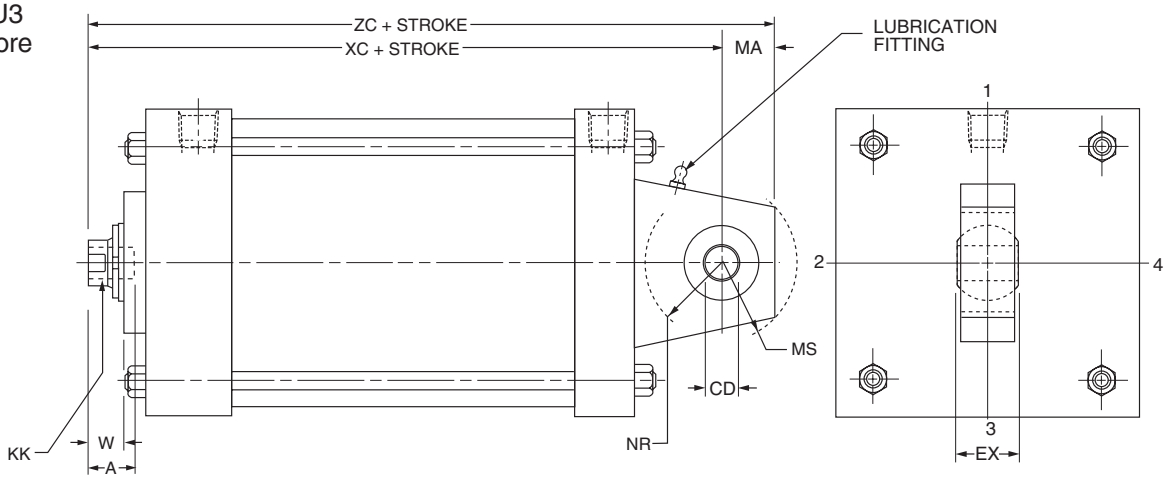

Bore	Rod Dia. MM	Thread Style 3 KK[3]	Thread Style 7 KK[3]	A	CD[2]	EX	MA	MS	NR	W	Add Stroke XC	Add Stroke ZC	Max. Oper. psi[1] PA-2
8	1 3/8	1-14	–	1 5/8	-.0005 1.0000	7/8	1 1/4	1 11/16	1 1/4	7/8	8 1/4	9 1/2	250
	5 1/2	–	1-14	1 5/8						1 1/2	8 7/8	10 1/8	
	1 3/4	–	1-14	1 5/8						1 1/8	8 1/2	9 3/4	
	2	–	1-14	1 5/8						1 1/4	8 5/8	9 7/8	
	2 1/2	–	1-14	1 5/8						1 1/2	8 7/8	10 1/8	
	3	–	1-14	1 5/8						1 1/2	8 7/8	10 1/8	
	3 1/2	–	1-14	1 5/8						1 1/2	8 7/8	10 1/8	
	4	–	1-14	1 5/8						1 1/2	8 7/8	10 1/8	
	4 1/2	–	1-14	1 5/8						1 1/2	8 7/8	10 1/8	
	5	–	1-14	1 5/8						1 1/2	8 7/8	10 1/8	
10	1 3/4	1 1/4-12	–	2	-.0005 1.3750	1 3/16	1 7/8	2 7/16	1 5/8	1 1/8	10 3/8	12 1/4	250
	2	–	1 1/4-12	2						1 1/4	10 1/2	12 3/8	
	2 1/2	–	1 1/4-12	2						1 1/2	10 3/4	12 5/8	
	3	–	1 1/4-12	2						1 1/2	10 3/4	12 5/8	
	3 1/2	–	1 1/4-12	2						1 1/2	10 3/4	12 5/8	
	4	–	1 1/4-12	2						1 1/2	10 3/4	12 5/8	
	4 1/2	–	1 1/4-12	2						1 1/2	10 3/4	12 5/8	
	5	–	1 1/4-12	2						1 1/2	10 3/4	12 5/8	
	5 1/2	–	1 1/4-12	2						1 1/2	10 3/4	12 5/8	
12	2	1 1/2-12	–	2 1/4	-.0005 1.7500	1 17/32	2 1/2	2 7/8	2 1/16	1 1/4	11 1/8	13 5/8	250
	2 1/2	–	1 1/2-12	2 1/4						1 1/2	11 3/8	13 7/8	
	3	–	1 1/2-12	2 1/4						1 1/2	11 3/8	13 7/8	
	3 1/2	–	1 1/2-12	2 1/4						1 1/2	11 3/8	13 7/8	
	4	–	1 1/2-12	2 1/4						1 1/2	11 3/8	13 7/8	
	4 1/2	–	1 1/2-12	2 1/4						1 1/2	11 3/8	13 7/8	
	5	–	1 1/2-12	2 1/4						1 1/2	11 3/8	13 7/8	
	5 1/2	–	1 1/2-12	2 1/4						1 1/2	11 3/8	13 7/8	
14	2 1/2	1 7/8-12	–	3	-.0005 2.0000	1 3/4	2 1/2	3 5/16	2 3/8	1 1/2	12 7/8	15 3/8	250
	3	–	1 7/8-12	3						1 1/2	12 7/8	15 3/8	
	3 1/2	–	1 7/8-12	3						1 1/2	12 7/8	15 3/8	
	4	–	1 7/8-12	3						1 1/2	12 7/8	15 3/8	
	4 1/2	–	1 7/8-12	3						1 1/2	12 7/8	15 3/8	
	5	–	1 7/8-12	3						1 1/2	12 7/8	15 3/8	
	5 1/2	–	1 7/8-12	3						1 1/2	12 7/8	15 3/8	

[1] Maximum operating pressure at 4:1 design factor is based on tensile strength of material. Pressure ratings are based on standard commercial bearing ratings.

[2] Dimension CD is hole diameter.

[3] Threads listed are also for a spherical rod eye which match style 9 or style 7. The spherical rod eye pin diameter matches the cap pin and (if required) needs to be purchased separately; see PA-2 mounting accessories for detailed information.

Cylinder Accessories
Spherical Bearing Mount – Style MPU3

Schrader Bellows offers a complete range of Cylinder Accessories to assure you of the greatest versatility in present or future cylinder applications. Accessories offered for the respective cylinder include the Rod Eye, Pivot Pin and Clevis Bracket. To select the proper part number for any desired accessory refer to the charts below.

Spherical Rod Eye Dimensions

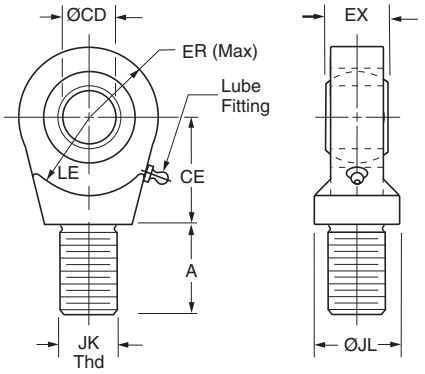

PA-2 Series Bore Ø	Part Number	CD Ø	A	CE	EX	ER	LE	JK Thread	JL Ø	Load Capacity (lb)
1.50, 2.00, 2.50	0961000050	.5000-0005	0.72	0.86	0.44	0.80	0.78	7/16-20	0.88	2644
3.25, 4.00, 5.00	0961000075	.7500-0005	1.02	1.25	0.66	1.14	1.06	3/4-16	1.31	9441
6.00, 8.00	0961000100	1.0000-0005	1.52	1.88	0.88	1.34	1.45	1-14	1.50	16860
10.00	0961000138	1.3750-0005	2.02	2.13	1.19	1.67	1.91	1 1/4-12	2.00	28562
12.00	0961000175	1.7500-0005	2.14	2.50	1.53	2.05	2.16	1 1/2-12	2.00	43005
14.00	0961000200	2.0000-0005	2.89	2.75	1.75	2.60	2.50	1 7/8-12	2.75	70193

Order to fit Piston Rod Thread Size.

Pivot Pin Dimensions

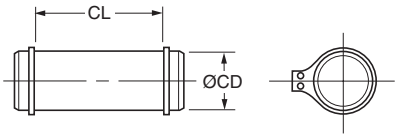

Pivot Pins are furnished with (2) Retainer Rings.

PA-2 Series Bore Ø	Part Number	CD Ø	CL	Shear Capacity (lb)
1.50, 2.00, 2.50	0839620000	.4997-0004	1.56	8600
3.25, 4.00, 5.00	0839630000	.7497-0005	2.03	19300
6.00, 8.00	0839640000	.9997-0005	2.50	34300
10.00	0839650000	1.3746-0006	3.31	65000
12.00	0839660000	1.7496-0006	4.22	105200
14.00	0839670000	1.9996-0007	4.94	137400

Clevis Bracket Dimensions

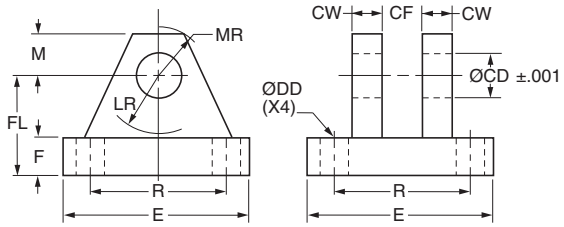

Fabricated Steel

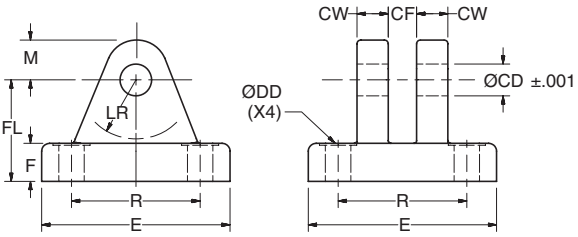

Cast Ductile Iron

Order to fit Cylinder Cap or Rod Eye.

PA-2 Series Bore Ø	Pin Ø	Cast Ductile Iron Part Number	Fabricated Steel Part Number	CD Ø	CF	CW	DD Ø	E	F	FL	LR	M	MR	R	Load Capacity (lb)
1.50, 2.00, 2.50	0.500	0959450000	0839470000	0.503	0.45	0.50	0.41	3.00	0.50	1.50	0.94	0.50	0.63	2.05	5770
3.25, 4.00, 5.00	0.750	0959300000	0839480000	0.753	0.67	0.63	0.53	3.75	0.63	2.00	1.38	0.88	1.00	2.76	9450
6.00, 8.00	1.000	0959310000	0839490000	1.003	0.89	0.75	0.53	5.50	0.75	2.50	1.69	1.00	1.19	4.10	14300
10.00	1.375	0959320000	0839500000	1.378	1.20	1 .00	0.66	6.50	0.88	3.50	2.44	1.38	1.63	4.95	20322
12.00	1.750	0959330000	0839510000	1.753	1.55	1.25	0.91	8.50	1.25	4.50	2.88	1.75	2.06	6.58	37800
14.00	2.000	0959340000	0839520000	2.003	1.77	1.50	0.91	10.63	1.50	5.00	3.00	2.00	2.38	7.92	50375

Double Rod Models
1" to 14" Bore

To determine dimensions for a double rod cylinder, first refer to the desired single rod mounting style cylinder shown on preceding pages of this catalog. After selecting necessary dimensions from that drawing, return to this page and supplement the single rod dimensions with those shown on the drawing and dimension table below. Note that double rod cylinders have a head (Dim. G) at both ends and that dimension LD or LF replaces LB or LG. The double rod dimensions differ from, or are in addition to those for single rod cylinders shown on preceding pages and provide the information needed to completely dimension a double rod cylinder. On a double rod cylinder where the two rod ends are different, be sure to clearly state which rod end is to be assembled at which end.

Port position 1 is standard. If other than standard, specify position 2, 3, or 4 when viewed from one end only.

If only one end of these Double Rod Cylinders is to be cushioned, be sure to specify clearly which end this will be.

Specify XI dimension from rod end #1.

How to Use Double Rod Cylinder Dimension Drawings

1" to 6" Bores
Tie Rod Retained Cartridge

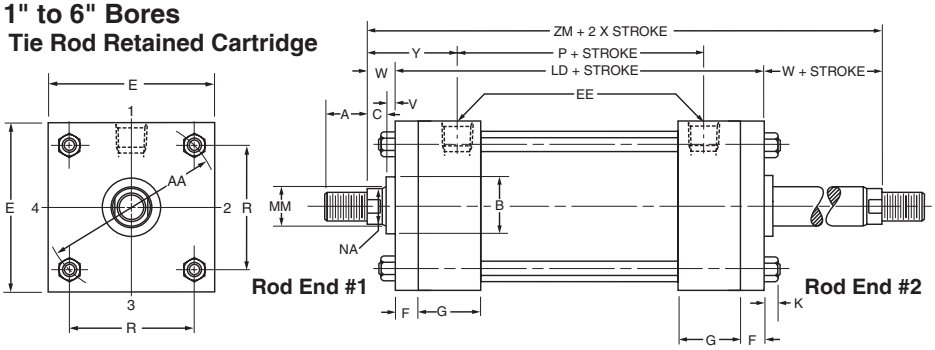

1" to 6" Bores
Removable Cartridge

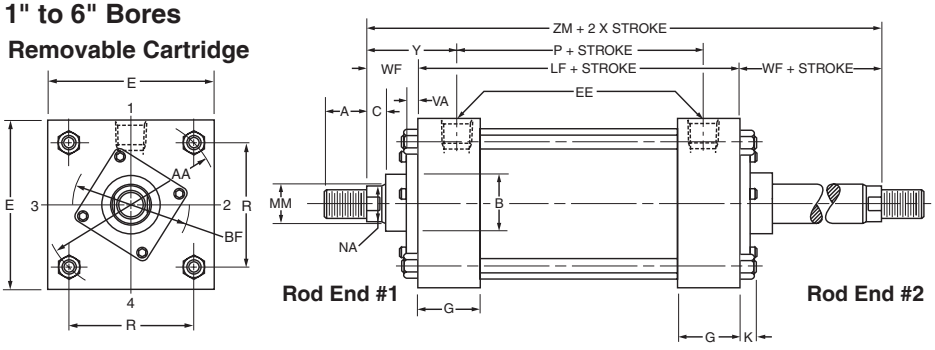

7" to 14" Bores

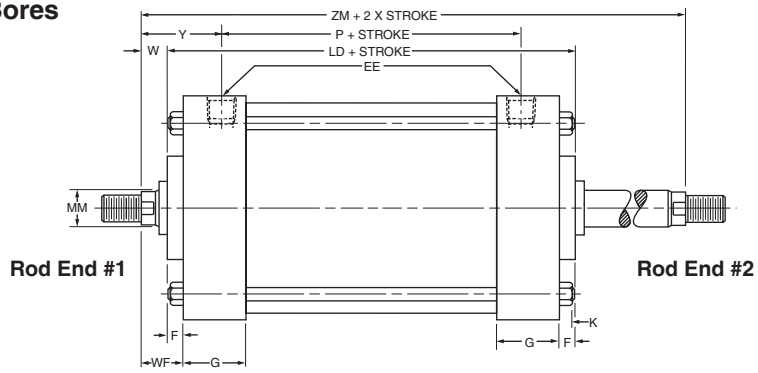

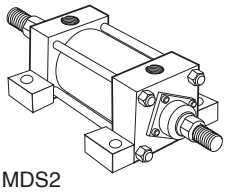
MDS2

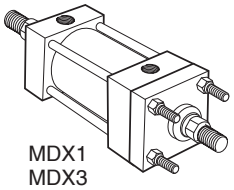
MDX1
MDX3

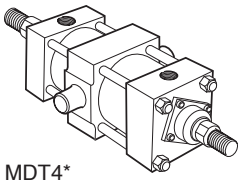
MDT4*

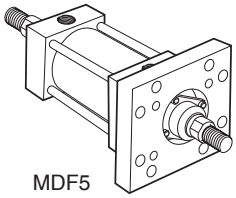
MDF5

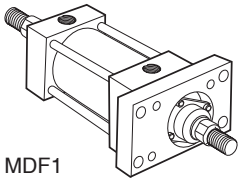
MDF1

All dimensions are in inches and apply to standard rod sizes only. For alternate rod sizes, determine all envelope dimensions (within LD dim.) as described above and then use appropriate rod end dimensions for proper rod size from single rod cylinder.

Bore	Rod Dia. MM	Add Stroke LD	Add Stroke LF	Add Stroke SS	Add 2X Stroke ZM
1	1/2	4 3/4	–	3 3/8	6
1 1/2	5/8	4 7/8	4 1/8	3 3/8	6 1/8
2	5/8	4 7/8	4 1/8	3 3/8	6 1/8
2 1/2	5/8	5	4 1/4	3 1/2	6 1/4
3 1/4	1	6	4 3/4	3 3/4	7 1/2
4	1	6	4 3/4	3 3/4	7 1/2
5	1	6 1/4	5	3 5/8	7 3/4
6	1 3/8	7	5 1/2	4 1/8	8 3/4
7	1 3/8	7 1/8	5 5/8	4 1/4	8 7/8
8	1 3/8	7 1/8	5 5/8	4 1/4	8 7/8
10	1 3/4	8 1/8	6 5/8	4 7/8	10 3/8
12	2	8 5/8	7 1/8	5 3/8	11 1/8
14	2 1/2	10 1/8	8 5/8	6 3/8	13 1/8
Replaces:		**LB**	**LG**	**SS**	—
On single rod mounting styles:		**All Mtg. Styles**		**MS2**	**All Mtgs.**

*Mounting style MDT4 not available in 1" and 7" bore sizes.

Cylinder Accessories
Schrader Bellows offers a complete range of cylinder accessories to assure flexibility and versatility in present or future cylinder applications.

Rod End Accessories
Accessories offered for the rod end of the cylinder include: Rod Clevis, Eye Bracket, Knuckle, Clevis Bracket and Pivot Pin. To select the proper part number for any desired accessory, refer to Chart A below and look opposite the thread size of the rod end as indicated in the first column. The Pivot Pins, Eye Brackets and Clevis Brackets are listed opposite the thread size which their mating Knuckles or Clevises fit.

Accessory Load Capacity
The various accessories on this and the following pages have been load rated for your convenience. The load capacity shown in pounds is the recommended maximum load for that accessory based on a 4:1 design factor in tension. (Pivot Pin is rated in shear.) Before specifying, compare the actual load or the tension (pull) force at maximum operating pressure of the cylinder with the load capacity of the accessory you plan to use. If load or pull force of cylinder exceeds load capacity of accessory, consult factory.

Chart A

Thread Size	Pin Ø	Rod Clevis		Mounting Plate or Eye Bracket		Pivot Pin	
		Part Number	Load Capacity (lb)	Forged Steel or Cast Ductile Iron		Part Number	Shear Capacity (lb)
				Part Number	Load Capacity (lb)		
5/16-24	0.312	0512210000[1]	2600	0959810031	1850	–	–
7/16-20	0.500	0509400000	4250	0959810050[2]	4620	0683680000	8600
1/2-20	0.500	0509410000	4900	0959810050[2]	4620	0683680000	8600
3/4-16	0.750	0509420000	11200	0959810075[2]	12370	0683690000	19300
3/4-16	0.750	1332840000	11200	0959810075[2]	12370	0683690000	19300
7/8-14	1.000	0509430000	18800	0959810100[2]	20450	0683700000	34300
1-14	1.000	0509440000	19500	0959810100[2]	20450	0683700000	34300
1-14	1.000	1332850000	19500	0959810100[2]	20450	0683700000	34300
1 1/4-12	1.375	0509450000	33500	0959810138	33500	0683710000	65000
1 1/4-12	1.375	1332860000	33500	0959810138	33500	0683710000	65000
1 1/2-12	1.750	0509460000	45600	0959810175	49480	0683720000	105200
1 3/4-12	2.000	0509470000	65600	0959810200[2]	70100	0683730000	137400
1 7/8-12	2.000	0509480000	65600	0959810200[2]	70100	0683730000	137400
2 1/4-12	2.500	0509490000	98200	0959810250[2]	98200	0683740000	214700
2 1/2-12	3.000	0509500000	98200	0959810300[2]	121940	0683750000	309200
2 3/4-12	3.000	0509510000	98200	0959810300[2]	121940	0683750000	309200
3 1/4-12	3.500	0509520000	156700	0959810350	187910	0735450000	420900
3 1/2-12	4.000	0509530000	193200	0959810400	268000	0735470000	565800
4-12	4.000	0509540000	221200	0959810400	268000	0735470000	565800

[1] Includes pivot pin.
[2] Cylinder accessory dimensions conform to ANSI/NFPA/T3.6.8 R3-2010.

Mounting Plates
Mounting Plates for Style MP1 (clevis mounted) cylinders are offered. To select proper part number for your application, refer to Chart B at right.

Chart B

PA-2 Series	
Mounting Plate Part Number	Bore Ø
0960160044	1.00
0959810050	1.50 , 2.00, 2.50
0959810075	3.25, 4.00, 5.00
0959810100	6.00, 8.00
0959810138	10.00
0959810175	12.00
0959810200	14.00

Rod Clevis Dimensions

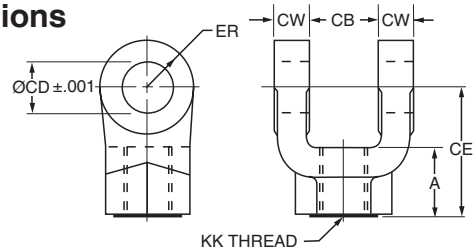

Part Number[1]	Pin Ø	A	CB	CD Ø	CE	CW	ER	KK Thread
0512210000[2]	0.310	0.81	0.34	0.314	2.25	0.20	0.30	5/16-24
0509400000	0.500	0.75	0.77	0.503	1.50	0.49	0.50	7/16-20
0509410000	0.500	0.75	0.77	0.503	1.50	0.49	0.50	1/2-20
0509420000	0.750	1.13	1.27	0.753	2.13	0.62	0.75	3/4-16
1332840000	0.750	1.13	1.27	0.753	2.38	0.62	0.75	3/4-16
0509430000	1.000	1.63	1.52	1.003	2.94	0.74	1.00	7/8-14
0509440000	1.000	1.63	1.52	1.003	2.94	0.74	1.00	1-14
1332850000	1.000	1.63	1.52	1.003	3.13	0.74	1.00	1-14
0509450000	1.375	1.88	2.04	1.378	3.75	0.99	1.38	1 1/4-12
1332860000	1.375	2.00	2.04	1.378	4.13	0.99	1.38	1 1/4-12
0509460000	1.750	2.25	2.54	1.753	4.50	1.24	1.75	1 1/2-12
0509470000	2.000	3.00	2.54	2.003	5.50	1.24	2.00	1 3/4-12
0509480000	2.000	3.00	2.54	2.003	5.50	1.24	2.00	1 7/8-12
0509490000	2.500	3.50	3.04	2.503	6.50	1.49	2.50	2 1/4-12
0509500000	3.000	3.50	3.04	3.003	6.75	1.49	2.75	2 1/2-12
0509510000	3.000	3.50	3.04	3.003	6.75	1.49	2.75	2 3/4-12
0509520000	3.500	3.50[3]	4.04	3.503	7.75	1.98	3.50	3 1/4-12
0509530000	4.000	4.00[3]	4.54	4.003	8.81	2.23	4.00	3 1/2-12
0509540000	4.000	4.00[3]	4.54	4.003	8.81	2.23	4.00	4-12

[1] Rod Clevises with pin diameters 0.312 thru 1.375 are forged steel. Rod Clevises with 1.750 pin diameter and larger are cast ductile iron.
[2] Includes Pivot Pin
[3] Consult appropriate cylinder rod end dimensions for compatibility.

Pivot Pin Dimensions

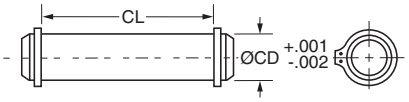

Part Number	CD Ø	CL
0683680000	0.500	1.88
0683690000	0.750	2.63
0683700000	1.000	3.13
0683710000	1.375	4.19
0683720000	1.750	5.19
0683730000	2.000	5.19
0683740000	2.500	6.19
0683750000	3.000	6.25
0735450000	3.500	8.25
0735470000[4]	4.000	9.00

[4] This size supplied with cotter pins.

Notes:

- Pivot Pins are furnished with Clevis Mounted Cylinders as standard.
- Pivot Pins are furnished with (2) Retainer Rings.
- Pivot Pins must be ordered as a separate item if to be used with Knuckles, Rod Clevises, or Clevis Brackets.

Forged Steel or Cast Ductile Iron Mounting Plate or Eye Bracket Dimensions[5]

Note: Cast ductile iron eye brackets must not be welded in place.

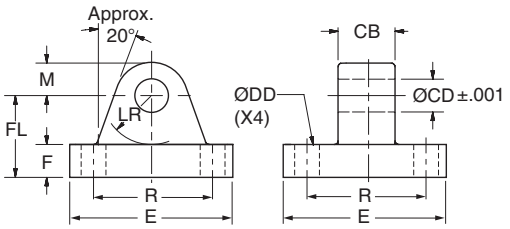

Cast or Forged[6] Part Number	Pin Ø	CB	CD Ø	DD Ø	E (As Cast)	F	FL	LR	M (As Cast)	R
0959810031	0.312	0.31	0.314	0.27	2.25	0.38	1.00	0.59	0.38	1.75
0959810050	0.500	0.75	0.503	0.41	2.50	0.38	1.13	0.69	0.50	1.63
0959810075	0.750	1.25	0.753	0.53	3.50	0.63	1.88	1.13	0.75	2.55
0959810100	1.000	1.50	1.003	0.66	4.50	0.88	2.38	1.37	1.00	3.25
0959810138	1.375	2.00	1.378	0.66	5.00	1.00[7]	3.00	1.88	1.38	3.82
0959810175	1.750	2.50	1.753	0.91	6.50	1.25[7]	3.38	2.13	1.75	4.95
0959810200	2.000	2.50	2.003	1.06	7.50	1.50	4.00	2.38	2.00	5.73
0959810250	2.500	3.00	2.503	1.19	8.50	1.75	4.75	2.88	2.50	6.58
0959810300	3.000	3.00	3.003	1.31	9.50	2.00	5.25	3.13	3.00	7.50
0959810350	3.500	4.00	3.503	1.81	12.63	2.50[8]	6.50[8]	3.88	3.50	9.62
0959810400	4.000	4.50	4.003	2.06	14.88	3.00[8]	7.50[8]	4.38	4.06	11.45

[5] When used to mate with the Rod Clevis, select by pin diameter in the table above.
[6] Eye Brackets with pin diameters 0.500 thru 1.375 are forged steel. Eye Brackets with 0.312 and 1.750 pin diameter and larger are cast ductile iron.
[7] These dimensions vary from NFPA standard. F is increased by 0.13. Sufficient LR clearance remains for full swing arc with Schrader Bellows cap clevis cylinders and rod clevises.
[8] Mounting base thickness dimension F is increased on these sizes to provide greater load capacity than the former fabricated steel design. Cast ductile iron dimensions F and FL are 0.81 larger for 3.500 pin diameter and 1.06 larger for 4.000 pin diameter.

Rod End Accessories

Accessories offered for the rod end of the cylinder include Rod Clevis, Eye Bracket, Knuckle, Clevis Bracket, and Pivot Pin. To select the proper part number for any desired accessory, refer to the table below and look in the row to the right of the rod thread in the first column. For economical accessory selection, it is recommended that rod end style 2 be specified on your cylinder order.

Accessory Load Capacity

The various accessories have been load rated for your convenience. The load capacity in pounds is the recommended maximum load for that accessory based on a 4:1 design factor in tension. (Pivot Pin is rated in shear.) Before specifying, compare the actual load or the tension (pull) force at the maximum operating pressure of the cylinder with the load capacity of the accessory you plan to use. If load or pull force of cylinder exceeds load capacity of accessory, consult factory.

Thread Size	Pin Ø	Knuckle		Clevis Bracket				Pivot Pin	
		Part Number	Load Capacity (lb)	Forged Steel or Cast Ductile Iron		Fabricated Steel		Part Number	Shear Capacity (lb)
				Part Number	Load Capacity (lb)	Part Number	Load Capacity (lb)		
5/16-24	0.438	0740750000	3300	0960160044	2830	0740760000	3600	0740780000	6600
7/16-20	0.500	0690890000	5000	0960160050	7740	0692050000	7300	0683680000	8600
1/2-20	0.500	0690900000	5700	0960160050	7740	0692050000	7300	0683680000	8600
3/4-16	0.750	0690910000	12100	0960160075	13600	0692060000	10880	0683690000	19300
7/8-14	1.000	0690920000	13000	0960160100	23000	0692070000	15180	0683700000	34300
1-14	1.000	0690930000	21700	0960160100	23000	0692070000	15180	0683700000	34300
1 1/4-12	1.375	0690940000	33500	0960160138	39500	0692080000	23560	0683710000	65000
1 1/2-12	1.750	0690950000	45000	0960160175	49480	0692090000	21520	0683720000	105200
1 3/4-12	2.000	0690960000	53500	0960160200	72400	0692100000	26000	0692150000	137400
1 7/8-12	2.000	0962160000	75000	0960160200	72400	0692100000	26000	0692150000	137400
2 1/4-12	2.500	0962170000	98700	0960160250	98700	0692110000	28710	0683740000	214700
2 1/2-12	3.000	0962180000	110000	0960160300	123300	0692120000	28190	0683750000	309200
2 3/4-12	3.000	0962190000	123300	N/A	N/A	0692130000	31390	0692160000	309200
3 1/4-12	3.500	0962200000	161300	0960160350	200400	0735420000	80250	0735450000	420900
3 1/2-12	3.500	0962210000	217300	0960160350	200400	0735420000	80250	0735450000	420900
4-12	4.000	0962220000	273800	0960160400	292100	0735430000	98420	0821810000	565800
N/A	4.000	N/A	N/A	N/A	N/A	N/A	N/A	0735470000[1]	565800

[1] This size supplied with cotter pins.

Forged Steel or Cast Ductile Iron Clevis Bracket Dimensions

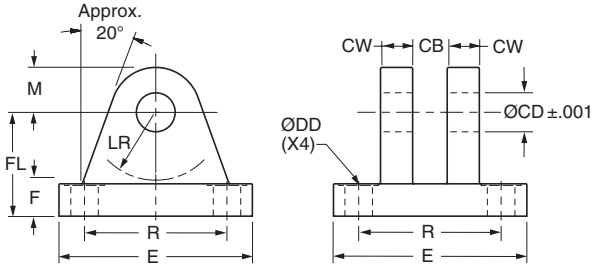

Note: Cast ductile iron clevis brackets must not be welded in place.

Cast or Forged[2] Part Number	Pin Ø	CB	CD Ø	CW	DD Ø	E (As Cast)	F	FL	LR	M (As Cast)	R
0960160044	0.438	0.46	0.440	0.37	0.27	2.25	0.38	1.00	0.56	0.44	1.75
0960160050	0.500	0.78	0.503	0.50	0.41	2.50	0.38	1.13	0.63	0.56	1.63
0960160075	0.750	1.28	0.753	0.63	0.53	3.50	0.63	1.88	1.06	0.75	2.56
0960160100	1.000	1.53	1.003	0.75	0.66	4.50	0.75	2.25	1.25	1.00	3.25
0960160138	1.375	2.03	1.378	1.00	0.66	5.00	0.88	3.00	1.94	1.38	3.81
0960160175	1.750	2.53	1.753	1.25	0.91	6.50	0.94	3.13	2.00	1.75	4.94
0960160200	2.000	2.53	2.003	1.25	1.06	7.50	1.38	3.75	2.25	2.00	5.75
0960160250	2.500	3.03	2.503	1.50	1.19	8.50	1.50	4.50	2.81	2.50	6.59
0960160300	3.000	3.03	3.003	1.50	1.31	9.50	1.88	5.38	3.31	3.00	7.50
0960160350	3.500	4.03	3.503	2.00	1.81	12.63	2.31	6.38	3.88	3.50	9.62
0960160400	4.000	4.53	4.003	2.25	2.06	14.88	2.88	7.50	4.50	4.00	11.50

[2] Clevis Brackets with pin diameters 0.500 thru 1.375 are forged steel. Clevis Brackets with 0.438 and 1.750 pin diameter and larger are cast ductile iron.

Knuckle Dimensions

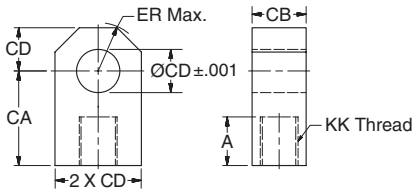

Thread Size thru 1 3/4-12

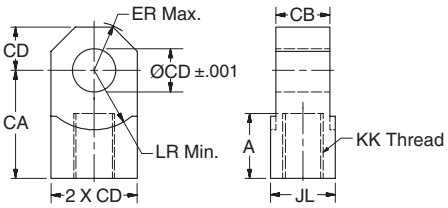

Thread Size 1 7/8-12 & Larger

Part Number	Pin Ø	A	CA	CB	CD Ø	ER	JL	LR min	KK Thread
0740750000	0.438	0.75	1.50	0.43	0.440	0.53	–	–	5/16-24
0690890000	0.500	0.75	1.50	0.75	0.503	0.59	–	–	7/16-20
0690900000	0.500	0.75	1.50	0.75	0.503	0.59	–	–	1/2-20
0690910000	0.750	1.13	2.06	1.25	0.753	0.87	–	–	3/4-16
0690920000	1.000	1.13	2.38	1.50	1.003	1.15	–	–	7/8-14
0690930000	1.000	1.63	2.81	1.50	1.003	1.15	–	–	1-14
0690940000	1.375	2.00	3.44	2.00	1.378	1.55	–	–	1 1/4-12
0690950000	1.750	2.25	4.00	2.50	1.753	1.96	–	–	1 1/2-12
0690960000	2.000	2.25	4.38	2.50	2.003	2.24	–	–	1 3/4-12
0962160000	2.000	3.00	5.00	2.50	2.003	2.24	3.00	2.77	1 7/8-12
0962170000	2.500	3.50	5.81	3.00	2.503	2.76	3.50	3.09	2 1/4-12
0962180000	3.000	3.50	6.13	3.00	3.003	3.30	4.00	3.58	2 1/2-12
0962190000	3.000	3.63	6.50	3.50	3.003	3.30	4.00	3.58	2 3/4-12
0962200000	3.500	4.50	7.63	4.00	3.503	3.87	6.00	4.18	3 1/4-12
0962210000	3.500	5.00	7.63	4.00	3.503	3.87	6.00	4.18	3 1/2-12
0962220000	4.000	5.50	9.13	4.50	4.003	4.43	6.00	4.80	4-12

Pivot Pin Dimensions

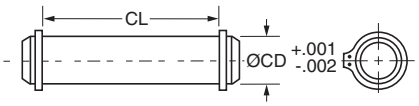

Part Number	CD Ø	CL
0740780000	0.438	1.31
0683680000	0.500	1.88
0683690000	0.750	2.63
0683700000	1.000	3.13
0683710000	1.375	4.19
0683720000	1.750	5.19
0692150000	2.000	5.69
0683740000	2.500	6.19
0683750000	3.000	6.25
0692160000	3.000	6.75
0735450000	3.500	8.25
0821810000	4.000	8.69
0735470000[1]	4.000	9.00

[1]This size supplied with cotter pins.

Notes:

- Pivot Pins are furnished with Clevis Mounted Cylinders as standard.
- Pivot Pins are furnished with (2) Retainer Rings.
- Pivot Pins must be ordered as a separate item if to be used with Knuckles, Rod Clevises, or Clevis Brackets.

Fabricated Steel Clevis Bracket Dimensions

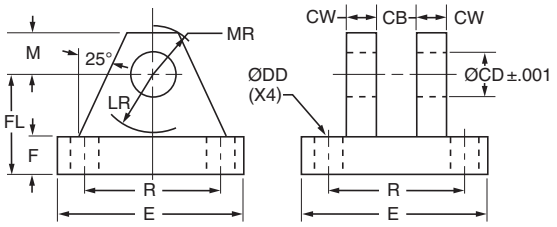

Fabricated Steel Part Number	Pin[2] Ø	CB	CD Ø	CW	DD Ø	E	F	FL	LR	M	MR	R
0692050000	0.500	0.80	0.503	0.50	0.41	3.50	0.50	1.50	0.75	0.50	0.63	2.55
0692060000	0.750	1.30	0.753	0.63	0.53	5.00	0.63	1.88	1.19	0.75	0.91	3.82
0692070000	1.000	1.59	1.003	0.75	0.66	6.50	0.75	2.25	1.50	1.00	1.25	4.95
0692080000	1.375	2.09	1.378	1.00	0.66	7.50	0.88	3.00	2.00	1.38	1.66	5.73
0692090000	1.750	2.59	1.753	1.25	0.91	9.50	0.88	3.63	2.75	1.75	2.22	7.50
0692100000	2.000	2.59	2.003	1.50	1.06	12.75	1.00	4.25	3.19	2.25	2.78	9.40
0692110000	2.500	3.09	2.503	1.50	1.19	12.75	1.00	4.50	3.50	2.50	3.13	9.40
0692120000	3.000	3.09	3.003	1.50	1.31	12.75	1.00	6.00	4.25	3.00	3.59	9.40
0692130000	3.000	3.59	3.003	1.50	1.31	12.75	1.00	6.00	4.25	3.00	3.59	9.40
0735420000	3.500	4.09	3.503	2.00	1.81	15.50	1.69	6.69	5.00	3.50	4.13	12.00
0735430000	4.000	4.59	4.003	2.00	2.06	17.50	1.94	7.69	5.75	4.00	4.88	13.75

[2] Clevis Bracket for 0.438 diameter pin is only available in cast ductile iron construction. See part number 0960160044 on previous page.

Schrader Bellows "Style 6" Piston Rod End

Rod end flange coupling for Schrader Bellows PA-2 and PN Series Pneumatic Cylinders

- Simplifies alignment
- Reduces assembly time
- Allows full rated pneumatic pressure in push and pull directions
- Available in 5/8" through 5-1/2" piston rod diameters

Style 6 Rod End

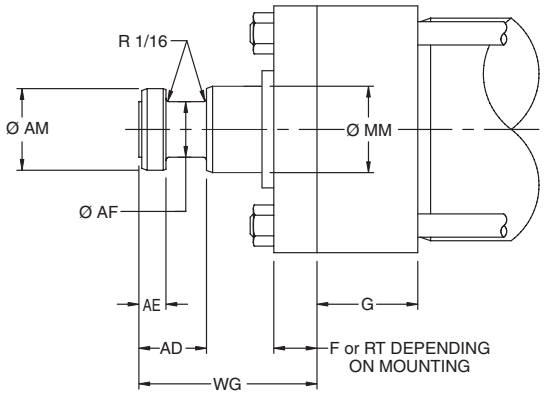

Dimensions Style 6 Rod End

MM Rod Dia.	AD	AE	AF	AM	WG
5/8	5/8	1/4	3/8	.57	1 3/4
1	15/16	3/8	11/16	.95	2 3/8
1 3/8	1 1/16	3/8	7/8	1.32	2 3/4
1 3/4	1 5/16	1/2	1 1/8	1.70	3 1/8
2	1 11/16	5/8	1 3/8	1.95	3 3/4
2 1/2	1 15/16	3/4	1 3/4	2.45	4 1/2
3	2 7/16	7/8	2 1/4	2.95	4 7/8
3 1/2	2 11/16	1	2 1/2	3.45	5 5/8
4	2 11/16	1	3	3.95	5 3/4
4 1/2	3 3/16	1 1/2	3 1/2	4.45	6 1/2
5	3 3/16	1 1/2	3 7/8	4.95	6 5/8
5 1/2	3 15/16	1 7/8	4 3/8	5.45	7 1/2

See mounting information pages for F, G and RT per bore and series.

Consult Factory for availability of mounting accessories and Hardware.

How To Order

Complete Model Number and place a "6" in the Piston Rod End designator position.

Example: PAD1135<u>6</u>1x12.00

Schrader Bellows "Style 6" Piston Rod End

Split Couplers and Weld Plates

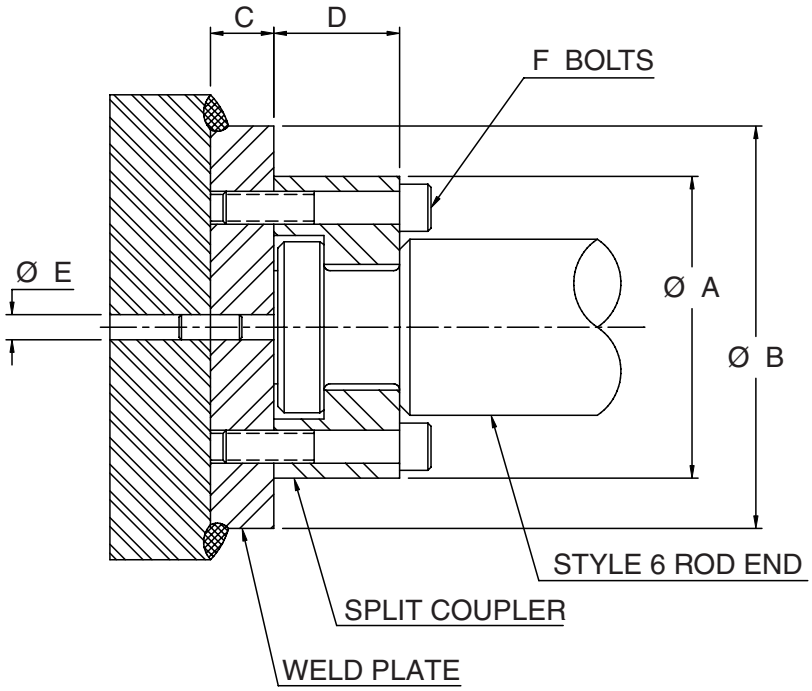

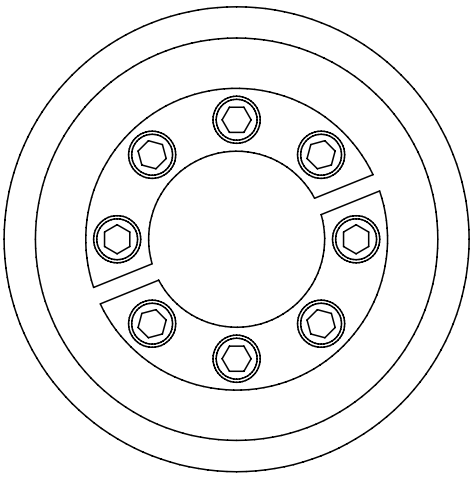

⚠ **WARNING:** Piston rod separation from the machine member can result in severe personal injury or even death to nearby personnel. The cylinder user must make sure the weld holding the weld plate to the machine is of sufficient quality and size to hold the intended load. The cylinder user must also make sure the bolts holding split coupler to the weld plate are of sufficient strength to hold the intended load and installed in such a way that they will not become loose during the machine's operation.

Table 1 — Part Numbers and Dimensions

ROD DIA.	A	B	C	D	E	F	BOLT SIZE	BOLT CIRCLE	SPLIT COUPLER PART NO.	WELD PLATE PART NO.
5/8	1.50	2.00	.50	.56	.250	4	#10-24 x .94 LG	1.125	1472340062	1481740062
1	2.00	2.50	.50	.88	.250	6	.250-20 x 1.25 LG	1.500	1472340100	1481740100
1 3/8	2.50	3.00	.63	1.00	.250	6	.312-18 x 1.50 LG	2.000	1472340138	1481740138
1 3/4	3.00	4.00	.63	1.25	.250	8	.312-18 x 1.75 LG	2.375	1472340175	1481740175
2	3.50	4.00	.75	1.63	.375	12	.375-16 x 2.25 LG	2.687	1472340200	1481740200
2 1/2	4.00	4.50	.75	1.88	.375	12	.375-16 x 2.50 LG	3.187	1472340250	1481740250
3	5.00	5.50	1.00	2.38	.375	12	.500-13 x 3.25 LG	4.000	1472340300	1481740300
3 1/2	5.88	7.00	1.00	2.63	.375	12	.625-11 x 3.50 LG	4.687	1472340350	1481740350
4	6.38	7.00	1.00	2.63	.375	12	.625-11 x 3.50 LG	5.187	1472340400	1481740400
4 1/2	6.88	8.00	1.00	3.13	.375	12	.625-11 x 4.00 LG	5.687	1472340450	1481740450
5	7.38	8.00	1.00	3.13	.375	12	.625-11 x 4.00 LG	6.187	1472340500	1481740500
5 1/2	8.25	9.00	1.25	3.88	.375	12	.750-10 x 5.00 LG	6.875	1472340550	1481740550

Note: Bolts are not included with split coupler or weld plate.

How to Order PA-2 Series Cylinders

When ordering PA-2 Series cylinders, please review the following:

Note: Duplicate cylinders can be ordered by giving the SERIAL NUMBER from the nameplate of the original cylinder. Factory records supply a quick positive identification.

Piston Rods: Specify model number code based on bore size and rod diameter. Give thread style number for a standard thread or specify dimensions. See “Style 0 Rod End” below.

Cushions: If cushions are required specify according to the model number on the next page. If the cylinder is to have a double rod and only one cushion is required, be sure to specify clearly which end of the cylinder is to be cushioned.

Special Modifications: Additional information is required on orders for cylinders with special modifications. This is best handled with descriptive notes. For further information, consult factory.

Fluid Medium: PA-2 Series pneumatic cylinders are equipped with seals for use with lubricated air.

Class 1 Seals

Class 1 seals are the seals provided as standard in a cylinder assembly unless otherwise specified. For further information on fluid compatibility or operating limitations of all components, see section C.

For the PA-2 Series cylinders the following make-up Class 1 Seals:

Primary Piston Rod Seal – Nitrile with PTFE back-up washers

Piston Rod Wiper – Nitrile

Piston Seals – Nitrile with polymyte back-up washers

O-Rings – Nitrile

Style 0 Rod End

A style 0 rod end indicates a special rod end configuration. All special piston rod dimensions must have **all three:** KK; A; and W/WF specified with the rod fully retracted. A sketch or drawing should be submitted for rod ends requiring special machining such as snap ring grooves, keyways, tapers, multiple diameters, etc. It is good design practice to have this machining done on a diameter at least 0.065 inches smaller than the piston rod diameter. This allows the piston rod to have a chamfer preventing rod seal damage during assembly or maintenance. Standard style 6 rod ends with a longer than standard WG dimension should call out a style 0 rod end and the note: **same as 6 except WG=____**. A drawing should be submitted for special 6 rod ends that have specific tolerances or special radii. Special rod ends that have smaller than standard male threads, larger than standard female threads, or style 6 rod ends with smaller than standard AF or AE dimensions are to be reviewed by Engineering for proper strength at operating pressure.

Service Policy

On cylinders returned to the factory for repairs, it is standard policy for the Industrial Cylinder Division to make such part replacements as will put the cylinder in as good as new condition. Should the condition of the returned cylinder be such that expenses for repair would exceed the costs of a new one, you will be notified.

Address all correspondence and make shipments to, Service Department at your nearest regional plant listed in the pages of this catalog.

Certified Dimensions

Schrader Bellows guarantees that all cylinders ordered from this catalog will be built to dimensions shown. All dimensions are certified to be correct, and thus it is not necessary to request certified drawings.

How To Order By Model Number

PA-2 Pneumatic Cylinders can be specified by model number by using the tables shown at right.

1. Type
Select the Model Number Code which identifies single, double end or non-lube.

2. Bore & Rod Diameter
Select the Model Number Code which identifies the desired bore size and rod diameter combination.

3. Mounting & Cushioning
Select the Model Number Code which identifies the desired mounting style and cushioning option.

4. Rod End Style
Select the Model Number Code which identifies the desired rod end thread style.

5. Seal Type
Complete the Model Number by selecting the type of seals desired.

6. Stroke Length
It is necessary to specify the stroke length desired following the Model Number. For example: PAA101621 with 6" stroke.

Specifying the Desired Trunnion Location
For cylinders with intermediate trunnion mounting, the dimension specified should be the distance from the piston rod reference point to the center-line of the pin.

The Example Would Identify:
A single end pneumatic cylinder, 1-1/2" bore size, 5/8" piston rod diameter, side tapped mount, cushioned both ends, with a small male rod thread, Buna N Seals, a 6" stroke.

Optional Mounting Accessories
Specify separately the part number for desired optional mounting accessories.

Note: For special modifications other than piston rod ends use S in the tenth position of the model number and describe special features required.
Example: PAA101621S 6" Stroke Cylinder to be Nickel Plated.

1 Type	Model Number PA-2 Series Pneumatic
Single End	PA
Double End	PB
Non-Lube Single End	PN
Non-Lube Double End	PP

2 Bore Size	Rod Dia.	Model No. Code
1"	1/2"	S50
	5/8"	S10
1 1/2"	5/8"	A10
	1"	A11
2"	5/8"	B10
	1"	B11
	1 3/8"	B12
2 1/2"	5/8"	C10
	1"	C11
	1 3/8"	C12
	1 3/4"	C13
3 1/4"	1"	D11
	1 3/8"	D12
	1 3/4"	D13
	2"	D14
4"	1"	E11
	1 3/8"	E12
	1 3/4"	E13
	2"	E14
	2 1/2"	E15
5"	1"	F11
	1 3/8"	F12
	1 3/4"	F13
	2"	F14
	2 1/2"	F15
	3"	F16
	3 1/2"	F17
6"	1 3/8"	G12
	1 3/4"	G13
	2"	G14
	2 1/2"	G15
	3"	G16
	3 1/2"	G17
	4"	G18
7"	1 3/8"	H12
	1 3/4"	H13
	2"	H14
8"	1 3/8"	J12
	1 3/4"	J13
	2"	J14
	2 1/2"	J15
	3"	J16
	3 1/2"	J17
	4"	J18
	4 1/2"	J19
	5"	J41
	5 1/2"	J42
10"	1 3/4"	K13
	2"	K14
	2 1/2"	K15
	3"	K16
	3 1/2"	K17
	4"	K18
	4 1/2"	K19
	5"	K41
	5 1/2"	K42
12"	2	L14
	2 1/2"	L15
	3"	L16
	3 1/2"	L17
	4"	L18
	4 1/2"	L19
	5"	L41
	5 1/2"	L42
14"	2 1/2"	M15
	3"	M16
	3 1/2"	M17
	4"	M18
	4 1/2"	M19
	5"	M41
	5 1/2"	M42

3 Mounting Style	Model Number Code NFPA Style	Non-Cush.	Cush. Head	Cush. Cap	Cush. Both
Side Lug	MS2	05	06	07	08
Side Tap	MS4	13	14	15	16
Head Rectangular Flange (1-6)	MF1	21	22	23	24
Cap Rectangular Flange (1-6)	MF2	25	26	27	28
Head Square Flange (1-6)	MF5	29	30	31	32
Cap Square Flange (1-6)	MF6	33	34	35	36
Head Square (7-14)	ME3	37	38	39	40
Cap Square (7-14)	ME4	41	42	43	44
Tie Rods Extended Both Ends	MX1	53	54	55	56
Tie Rods Extended Cap End	MX2	57	58	59	60
Tie Rods Extended Head End	MX3	61	62	63	64
Head Trunnion	MT1	69	70	71	72
Cap Trunnion	MT2	73	74	75	76
Intermediate Fixed Trunnion	MT4	77	78	79	80
Cap Fixed Clevis	MP1	81	82	83	84
Spherical Bearing	MPU3	89	90	91	92
NO MOUNT	MX0	93	94	95	96

4 Rod End Style	Model Number Code
Small Male	2
Short Female	3
Intermediate Male	4
Flange Coupling	6
Female Thread for Spherical Rod Eye	7
Special Specify	0

5 Seal Type	Model Number Code
Buna N Seals	1
Fluorocarbon Seals	2
High Temperature Seals	8

Model Number Example:

PA A10 16 2 1 W/6" Stroke

6 Specify Stroke Length	6.00"

Schrader Bellows Non-Lube Heavy-Duty Air Cylinders

PN Series

For millions of trouble free cycles

- **Nominal pressure — 250 psi — Air Service**
- **Standard Bore Sizes — 1" through 14"**
- **Piston Rod Diameters — 1/2" through 5 1/2"**
- **14 Standard Mounting Styles**
- **NFPA Interchangeable**
- **Exceeds Automotive Specifications**

The PN Series Non-Lube Air Cylinder with Proven Performance

Millions of trouble free cycles with... ZERO LEAKAGE.

Piston Lipseals

Gland Lipseal

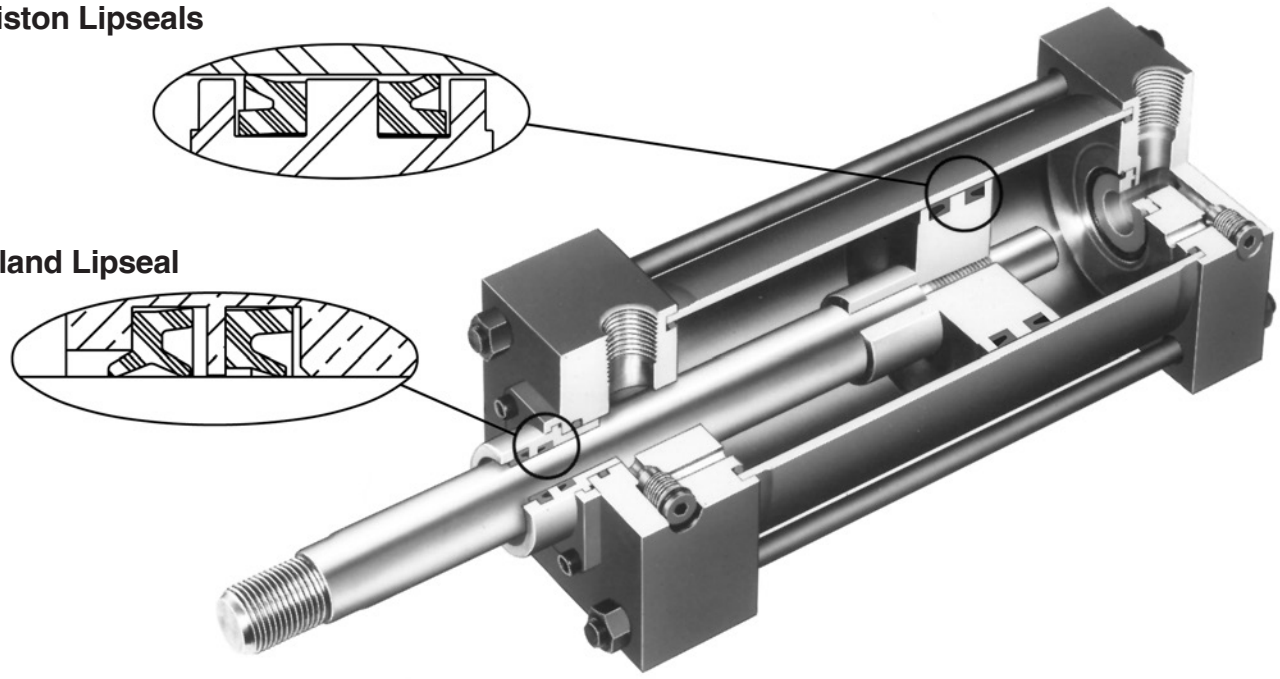

Increased Market Demand and continuous research and testing efforts inspired the development of the PN Series Non-Lubricated Air Cylinder. The PN Series piston rod and cylinder barrel surfaces act as highly efficient lubricant reservoirs, maintaining their own lubricant film. Other manufacturers pack grease into grooves and pockets and call them reservoirs. The fact of the matter is that as those grooves empty out over time; grease is being transported out of the cylinder and into the control system components and the atmosphere. The PN Series concept eliminates that problem by maintaining the lubricant film where it belongs: on the seals, bearing surfaces, piston rod and cylinder bore.

Benefits include...long seal and bearing life and since no oil is added through the use of lubricators – no oil is expelled into the atmosphere with the exhaust air as the cylinder strokes.

Anatomy of PN Series Sealing and Lubricant Retention Systems

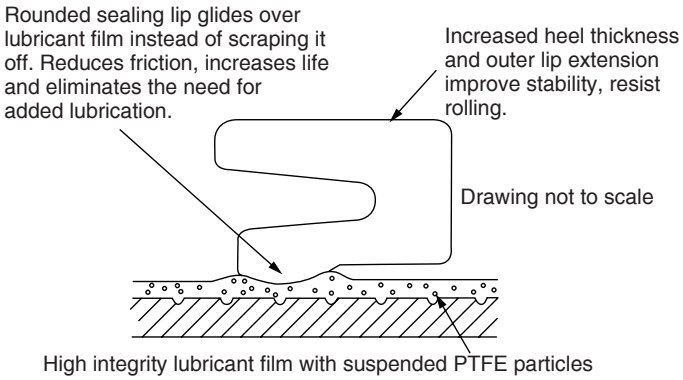

In the PN Series you get all the cost saving benefits and features of the popular heavy-duty PA-2 Series air cylinder including...

- Bolt-On Rod Gland Assembly for positive no leak sealing
- Piston rod, hard chrome-plated and case-hardened steel
- High strength rolled thread Piston Rod Stud
- Steel tube cylinder body with chrome-plated micro finish bore...

Plus the innovative "Non-Lube" feature which further increases your benefits of lower operating and maintenance costs.

Standard Specifications

- Heavy-Duty Service — ANSI/(NFPA) T3.6.7 R3-2009 Mounting Dimension Standards
- Standard Construction — Square Head — Tie Rod Design
- Standard Temperature — -10°F to +165°F
- Standard Fluid — Filtered Air
- Strokes — Available in any practical stroke length
- Cushions — Optional at either end or both ends of stroke. "Float Check" at cap end.

In line with our policy of continuing product improvement, specifications in this bulletin are subject to change.

Available Bore and Rod Sizes

Bore Sizes Available	1"	1 1/2"	2"	2 1/2"	3 1/4"	4"	5"	6"	8"	10"	12"	14"

Rod Sizes Available	1/2"	5/8"	1"	1 3/8"	1 3/4"	2"	2 1/2"	3"	3 1/2"	4"	4 1/2"	5"	5 1/2"

How to Order PN Series Non-Lube Air Cylinders

Data Required on all PN Cylinder Orders

When ordering PN Series cylinders, be sure to specify each of the following requirements:

(**Note:** Duplicate cylinders can be ordered by giving the SERIAL NUMBER from the nameplate of the original cylinder. Factory records supply a quick, positive identification.)

a) Bore Size

b) Mounting Style
Specify your choice of mounting style — as shown in this catalog. If double rod is wanted, specify "with double rod."

c) Series Designation (PN)

d) Length of Stroke

e) Piston Rod Diameter
Specify rod diameter in PN Series cylinders, standard rod diameters will be furnished if not otherwise specified, unless length of stroke makes the application questionable.

f) Piston Rod End Thread Style
Give thread style number or specify dimensions. Thread style number 2 will be supplied if not otherwise specified.

g) Cushions (if required)
Specify "Cushion-head end," "Cushion-cap end" or "Cushion-both ends" as required. If cylinder is to have a double rod and only one cushion is required, be sure to specify clearly which end of the cylinder is to be cushioned.

Safety Guide for Selecting and Using Hydraulic, Pneumatic Cylinders and Their Accessories

WARNING: ⚠ FAILURE OF THE CYLINDER, ITS PARTS, ITS MOUNTING, ITS CONNECTIONS TO OTHER OBJECTS, OR ITS CONTROLS CAN RESULT IN:

- **Unanticipated or uncontrolled movement of the cylinder or objects connected to it.**
- **Falling of the cylinder or objects held up by it.**
- **Fluid escaping from the cylinder, potentially at high velocity.**

THESE EVENTS COULD CAUSE DEATH OR PERSONAL INJURY BY, FOR EXAMPLE, PERSONS FALLING FROM HIGH LOCATIONS, BEING CRUSHED OR STRUCK BY HEAVY OR FAST MOVING OBJECTS, BEING PUSHED INTO DANGEROUS EQUIPMENT OR SITUATIONS, OR SLIPPING ON ESCAPED FLUID.

Before selecting or using Parker (The Company) cylinders or related accessories, it is important that you read, understand and follow the following safety information. Training is advised before selecting and using The Company's products.

1.0 General Instructions

1.1 Scope – This safety guide provides instructions for selecting and using (including assembling, installing, and maintaining) cylinder products. This safety guide is a supplement to and is to be used with the specific Company publications for the specific cylinder products that are being considered for use.

1.2 Fail Safe – Cylinder products can and do fail without warning for many reasons. All systems and equipment should be designed in a fail-safe mode so that if the failure of a cylinder product occurs people and property won't be endangered.

1.3 Distribution – Provide a free copy of this safety guide to each person responsible for selecting or using cylinder products. Do not select or use The Company's cylinders without thoroughly reading and understanding this safety guide as well as the specific Company publications for the products considered or selected.

1.4 User Responsibility – Due to very wide variety of cylinder applications and cylinder operating conditions, The Company does not warrant that any particular cylinder is suitable for any specific application. This safety guide does not analyze all technical parameters that must be considered in selecting a product. The hydraulic and pneumatic cylinders outlined in this catalog are designed to The Company's design guidelines and do not necessarily meet the design guideline of other agencies such as American Bureau of Shipping, ASME Pressure Vessel Code etc. The user, through its own analysis and testing, is solely responsible for:

- Making the final selection of the cylinders and related accessories.
- Determining if the cylinders are required to meet specific design requirements as required by the Agency(s) or industry standards covering the design of the user's equipment.
- Assuring that the user's requirements are met, OSHA requirements are met, and safety guidelines from the applicable agencies such as but not limited to ANSI are followed and that the use presents no health or safety hazards.
- Providing all appropriate health and safety warnings on the equipment on which the cylinders are used.

1.5 Additional Questions – Call the appropriate Company technical service department if you have any questions or require any additional information. See the Company publication for the product being considered or used, or call 1-847-298-2400, or go to www.parker.com, for telephone numbers of the appropriate technical service department.

2.0 Cylinder and Accessories Selection

2.1 Seals – Part of the process of selecting a cylinder is the selection of seal compounds. Before making this selection, consult the "seal information page(s)" of the publication for the series of cylinders of interest.

The application of cylinders may allow fluids such as cutting fluids, wash down fluids etc. to come in contact with the external area of the cylinder. These fluids may attack the piston rod wiper and or the primary seal and must be taken into account when selecting and specifying seal compounds.

Dynamic seals will wear. The rate of wear will depend on many operating factors. Wear can be rapid if a cylinder is mis-aligned or if the cylinder has been improperly serviced. The user must take seal wear into consideration in the application of cylinders.

2.2 Piston Rods – Possible consequences of piston rod failure or separation of the piston rod from the piston include, but are not limited to are:

- Piston rod and or attached load thrown off at high speed.
- High velocity fluid discharge.
- Piston rod extending when pressure is applied in the piston retract mode.

Piston rods or machine members attached to the piston rod may move suddenly and without warning as a consequence of other conditions occurring to the machine such as, but not limited to:

- Unexpected detachment of the machine member from the piston rod.
- Failure of the pressurized fluid delivery system (hoses, fittings, valves, pumps, compressors) which maintain cylinder position.
- Catastrophic cylinder seal failure leading to sudden loss of pressurized fluid.
- Failure of the machine control system.

Follow the recommendations of the "Piston Rod Selection Chart and Data" in the publication for the series of cylinders of interest. The suggested piston rod diameter in these charts must be followed in order to avoid piston rod buckling.

Piston rods are not normally designed to absorb bending moments or loads which are perpendicular to the axis of piston rod motion. These additional loads can cause the piston rod to fail. If these types of additional loads are expected to be imposed on the piston rod, their magnitude should be made known to our engineering department.

The cylinder user should always make sure that the piston rod is securely attached to the machine member.

On occasion cylinders are ordered with double rods (a piston rod extended from both ends of the cylinder). In some cases a stop is threaded on to one of the piston rods and used as an external stroke adjuster. On occasions spacers are attached to the machine member connected to the piston rod and also used as a stroke adjuster. In both cases the stops will create a pinch point and the user should consider appropriate use of guards. If these external stops are not perpendicular to the mating contact surface, or if debris is trapped between the contact surfaces, a bending moment will be placed on the piston rod, which can lead to piston rod failure. An external stop will also negate the effect of cushioning and will subject the piston rod to impact loading. Those two (2) conditions can cause piston rod failure. Internal stroke adjusters are available with and without cushions. The use of external stroke adjusters should be reviewed with our engineering department.

The piston rod to piston and the stud to piston rod threaded connections are secured with an anaerobic adhesive. The strength of the adhesive decreases with increasing temperature. Cylinders which can be exposed to temperatures above +250°F (+121°C) are to be ordered with a non studded piston rod and a pinned piston to rod joint.

2.3 Cushions – Cushions should be considered for cylinder applications when the piston velocity is expected to be over 4 inches/second.

Cylinder cushions are normally designed to absorb the energy of a linear applied load. A rotating mass has considerably more energy than the same mass moving in a linear mode. Cushioning for a rotating mass application should be reviewed by our engineering department.

2.4 Cylinder Mountings – Some cylinder mounting configurations may have certain limitations such as but not limited to minimum stroke for side or foot mounting cylinders or pressure de-ratings for certain mounts. Carefully review the catalog for these types of restrictions.

Always mount cylinders using the largest possible high tensile alloy steel socket head cap screws that can fit in the cylinder mounting holes and torque them to the manufacturer's recommendations for their size.

2.5 Port Fittings – Hydraulic cylinders applied with meter out or deceleration circuits are subject to intensified pressure at piston rod end.

The rod end pressure is approximately equal to:

$$\frac{\text{operating pressure x effective cap end area}}{\text{effective rod end piston area}}$$

Contact your connector supplier for the pressure rating of individual connectors.

3.0 Cylinder and Accessories Installation and Mounting

3.1 Installation

3.1.1 – Cleanliness is an important consideration, and cylinders are shipped with the ports plugged to protect them from contaminants entering the ports. These plugs should not be removed until the piping is to be installed. Before making the connection to the cylinder ports, piping should be thoroughly cleaned to remove all chips or burrs which might have resulted from threading or flaring operations.

3.1.2 – Cylinders operating in an environment where air drying materials are present such as fast-drying chemicals, paint, or weld splatter, or other hazardous conditions such as excessive heat, should have shields installed to prevent damage to the piston rod and piston rod seals.

3.1.3 – Proper alignment of the cylinder piston rod and its mating component on the machine should be checked in both the extended and retracted positions. Improper alignment will result in excessive rod gland and/or cylinder bore wear. On fixed mounting cylinders attaching the piston rod while the rod is retracted will help in achieving proper alignment.

3.1.4 – Sometimes it may be necessary to rotate the piston rod in order to thread the piston rod into the machine member. This operation must always be done with zero pressure being applied to either side of the piston. Failure to follow this procedure may result in loosening the piston to rod-threaded connection. In some rare cases the turning of the piston rod may rotate a threaded piston rod gland and loosen it from the cylinder head. Confirm that this condition is not occurring. If it does, re-tighten the piston rod gland firmly against the cylinder head.

For double rod cylinders it is also important that when attaching or detaching the piston rod from the machine member that the torque be applied to the piston rod end of the cylinder that is directly attaching to the machine member with the opposite end unrestrained. If the design of the machine is such that only the rod end of the cylinder opposite to where the rod attaches to the machine member can be rotated, consult the factory for further instructions.

3.2 Mounting Recommendations

3.2.1 – Always mount cylinders using the largest possible high tensile alloy steel socket head screws that can fit in the cylinder mounting holes and torque them to the manufacturer's recommendations for their size.

3.2.2 – Side-Mounted Cylinders – In addition to the mounting bolts, cylinders of this type should be equipped with thrust keys or dowel pins located so as to resist the major load.

3.2.3 – Tie Rod Mounting – Cylinders with tie rod mountings are recommended for applications where mounting space is limited. The standard tie rod extension is shown as BB in dimension tables. Longer or shorter extensions can be supplied. Nuts used for this mounting style should be torqued to the same value as the tie rods for that bore size.

3.2.4 – Flange Mount Cylinders – The controlled diameter of the rod gland extension on head end flange mount cylinders can be used as a pilot to locate the cylinders in relation to the machine. After alignment has been obtained, the flanges may be drilled for pins or dowels to prevent shifting.

3.2.5 – Trunnion Mountings – Cylinders require lubricated bearing blocks with minimum bearing clearances. Bearing blocks should be carefully aligned and rigidly mounted so the trunnions will not be subjected to bending moments. The rod end should also be pivoted with the pivot pin in line and parallel to axis of the trunnion pins.

3.2.6 – Clevis Mountings – Cylinders should be pivoted at both ends with centerline of pins parallel to each other. After cylinder is mounted, be sure to check to assure that the cylinder is free to swing through its working arc without interference from other machine parts.

4.0 Cylinder and Accessories Maintenance, Troubleshooting and Replacement

4.1 Storage – At times cylinders are delivered before a customer is ready to install them and must be stored for a period of time. When storage is required the following procedures are recommended.

4.1.1 – Store the cylinders in an indoor area which has a dry, clean and noncorrosive atmosphere. Take care to protect the cylinder from both internal corrosion and external damage.

4.1.2 – Whenever possible cylinders should be stored in a vertical position (piston rod up). This will minimize corrosion due to possible condensation which could occur inside the cylinder. This will also minimize seal damage.

4.1.3 – Port protector plugs should be left in the cylinder until the time of installation.

4.1.4 – If a cylinder is stored full of hydraulic fluid, expansion of the fluid due to temperature changes must be considered. Installing a check valve with free flow out of the cylinder is one method.

4.1.5 – When cylinders are mounted on equipment that is stored outside for extended periods, exposed unpainted surfaces, e.g. piston rod, must be coated with a rust-inhibiting compound to prevent corrosion.

4.2 Cylinder Trouble Shooting

4.2.1 – **External Leakage**

4.2.1.1 – Rod seal leakage can generally be traced to worn or damaged seals. Examine the piston rod for dents, gouges or score marks, and replace piston rod if surface is rough.

Rod seal leakage could also be traced to gland wear. If clearance is excessive, replace rod bushing and seal. Rod seal leakage can also be traced to seal deterioration. If seals are soft or gummy or brittle, check compatibility of seal material with lubricant used if air cylinder, or operating fluid if hydraulic cylinder. Replace with seal material, which is compatible with these fluids. If the seals are hard or have lost elasticity, it is usually due to exposure to temperatures in excess of 165°F. (+74°C). Shield the cylinder from the heat source to limit temperature to 350°F. (+177°C.) and replace with fluorocarbon seals.

4.2.1.2 – Cylinder body seal leak can generally be traced to loose tie rods. Torque the tie rods to manufacturer's recommendation for that bore size.

Excessive pressure can also result in cylinder body seal leak. Determine maximum pressure to rated limits. Replace seals and retorque tie rods as in paragraph above. Excessive pressure can also result in cylinder body seal leak. Determine if the pressure rating of the cylinder has been exceeded. If so, bring the operating pressure down to the rating of the cylinder and have the tie rods replaced.

Pinched or extruded cylinder body seal will also result in a leak. Replace cylinder body seal and retorque as in paragraph above.

Cylinder body seal leakage due to loss of radial squeeze which shows up in the form of flat spots or due to wear on the O.D. or I.D. – Either of these are symptoms of normal wear due to high cycle rate or length of service. Replace seals as per paragraph above.

4.2.2 – **Internal Leakage**

4.2.2.1 – Piston seal leak (by-pass) 1 to 3 cubic inches per minute leakage is considered normal for piston ring construction. Virtually no static leak with lipseal type seals on piston should be expected. Piston seal wear is a usual cause of piston seal leakage. Replace seals as required.

4.2.2.2 – With lipseal type piston seals excessive back pressure due to over-adjustment of speed control valves could be a direct cause of rapid seal wear. Contamination in a hydraulic system can result in a scored cylinder bore, resulting in rapid seal wear. In either case, replace piston seals as required.

4.2.2.3 – What appears to be piston seal leak, evidenced by the fact that the cylinder drifts, is not always traceable to the piston. To make sure, it is suggested that one side of the cylinder piston be pressurized and the fluid line at the opposite port be disconnected. Observe leakage. If none is evident, seek the cause of cylinder drift in other component parts in the circuit.

4.2.3 – **Cylinder Fails to Move the Load**

4.2.3.1 – Pneumatic or hydraulic pressure is too low. Check the pressure at the cylinder to make sure it is to circuit requirements.

4.2.3.2 – Piston Seal Leak – Operate the valve to cycle the cylinder and observe fluid flow at valve exhaust ports at end of cylinder stroke. Replace piston seals if flow is excessive.

4.2.3.3 – Cylinder is undersized for the load – Replace cylinder with one of a larger bore size.

4.3 Erratic or Chatter Operation

4.3.1 – Excessive friction at rod gland or piston bearing due to load misalignment – Correct cylinder-to-load alignment.

4.3.2 – Cylinder sized too close to load requirements – Reduce load or install larger cylinder.

4.3.3 – Erratic operation could be traced to the difference between static and kinetic friction. Install speed control valves to provide a back pressure to control the stroke.

4.4 Cylinder Modifications, Repairs, or Failed Component – Cylinders as shipped from the factory are not to be disassembled and or modified. If cylinders require modifications, these modifications must be done at company locations or by The Company's certified facilities. The Industrial Cylinder Division Engineering Department must be notified in the event of a mechanical fracture or permanent deformation of any cylinder component (excluding seals). This includes a broken piston rod, tie rod, mounting accessory or any other cylinder component. The notification should include all operation and application details. This information will be used to provide an engineered repair that will prevent recurrence of the failure.

It is allowed to disassemble cylinders for the purpose of replacing seals or seal assemblies. However, this work must be done by strictly following all the instructions provided with the seal kits.

Offer of Sale

The items described in this document and other documents and descriptions provided by Parker Hannifin Corporation, its subsidiaries and its authorized distributors ("Seller") are hereby offered for sale at prices to be established by Seller. This offer and its acceptance by any customer ("Buyer") shall be governed by all of the following Terms and Conditions. Buyer's order for any item described in its document, when communicated to Seller verbally, or in writing, shall constitute acceptance of this offer. All goods, services or work described will be referred to as "Products".

1. Terms and Conditions. Seller's willingness to offer Products, or accept an order for Products, to or from Buyer is subject to these Terms and Conditions or any newer version of the terms and conditions found on-line at www.parker.com/saleterms/. Seller objects to any contrary or additional terms or conditions of Buyer's order or any other document issued by Buyer.

2. Price Adjustments; Payments. Prices stated on Seller's quote or other documentation offered by Seller are valid for 30 days, and do not include any sales, use, or other taxes unless specifically stated. Unless otherwise specified by Seller, all prices are F.C.A. Seller's facility (INCOTERMS 2010). Payment is subject to credit approval and is due 30 days from the date of invoice or such other term as required by Seller's Credit Department, after which Buyer shall pay interest on any unpaid invoices at the rate of 1.5% per month or the maximum allowable rate under applicable law.

3. Delivery Dates; Title and Risk; Shipment. All delivery dates are approximate and Seller shall not be responsible for any damages resulting from any delay. Regardless of the manner of shipment, title to any products and risk of loss or damage shall pass to Buyer upon placement of the products with the shipment carrier at Seller's facility. Unless otherwise stated, Seller may exercise its judgment in choosing the carrier and means of delivery. No deferment of shipment at Buyers' request beyond the respective dates indicated will be made except on terms that will indemnify, defend and hold Seller harmless against all loss and additional expense. Buyer shall be responsible for any additional shipping charges incurred by Seller due to Buyer's acts or omissions.

4. Warranty. Seller warrants that the Products sold hereunder shall be free from defects in material or workmanship for a period of eighteen months from the date of delivery to Buyer. The prices charged for Seller's products are based upon the exclusive limited warranty stated above, and upon the following disclaimer: **DISCLAIMER OF WARRANTY: THIS WARRANTY COMPRISES THE SOLE AND ENTIRE WARRANTY PERTAINING TO PRODUCTS PROVIDED HEREUNDER. SELLER DISCLAIMS ALL OTHER WARRANTIES, EXPRESS AND IMPLIED, INCLUDING DESIGN, MERCHANTABILITY AND FITNESS FOR A PARTICULAR PURPOSE.**

5. Claims; Commencement of Actions. Buyer shall promptly inspect all Products upon delivery. No claims for shortages will be allowed unless reported to the Seller within 10 days of delivery. No other claims against Seller will be allowed unless asserted in writing within 30 days after delivery. Buyer shall notify Seller of any alleged breach of warranty within 30 days after the date the defect is or should have been discovered by Buyer. Any action based upon breach of this agreement or upon any other claim arising out of this sale (other than an action by Seller for an amount due on any invoice) must be commenced within 12 months from the date of the breach without regard to the date breach is discovered.

6. LIMITATION OF LIABILITY. UPON NOTIFICATION, SELLER WILL, AT ITS OPTION, REPAIR OR REPLACE A DEFECTIVE PRODUCT, OR REFUND THE PURCHASE PRICE. **IN NO EVENT SHALL SELLER BE LIABLE TO BUYER FOR ANY SPECIAL, INDIRECT, INCIDENTAL OR CONSEQUENTIAL DAMAGES ARISING OUT OF, OR AS THE RESULT OF, THE SALE, DELIVERY, NON-DELIVERY, SERVICING, USE OR LOSS OF USE OF THE PRODUCTS OR ANY PART THEREOF, OR FOR ANY CHARGES OR EXPENSES OF ANY NATURE INCURRED WITHOUT SELLER'S WRITTEN CONSENT, EVEN IF SELLER HAS BEEN NEGLIGENT, WHETHER IN CONTRACT, TORT OR OTHER LEGAL THEORY. IN NO EVENT SHALL SELLER'S LIABILITY UNDER ANY CLAIM MADE BY BUYER EXCEED THE PURCHASE PRICE OF THE PRODUCTS.**

7. User Responsibility. The user, through its own analysis and testing, is solely responsible for making the final selection of the system and Product and assuring that all performance, endurance, maintenance, safety and warning requirements of the application are met. The user must analyze all aspects of the application and follow applicable industry standards and Product information. If Seller provides Product or system options, the user is responsible for determining that such data and specifications are suitable and sufficient for all applications and reasonably foreseeable uses of the Products or systems.

8. Loss to Buyer's Property. Any designs, tools, patterns, materials, drawings, confidential information or equipment furnished by Buyer or any other items which become Buyer's property, will be considered obsolete and may be destroyed by Seller after two consecutive years have elapsed without Buyer ordering the items manufactured using such property. Seller shall not be responsible for any loss or damage to such property while it is in Seller's possession or control.

9. Special Tooling. A tooling charge may be imposed for any special tooling, including without limitation, dies, fixtures, molds and patterns, acquired to manufacture Products. Such special tooling shall be and remain Seller's property notwithstanding payment of any charges by Buyer. In no event will Buyer acquire any interest in apparatus belonging to Seller which is utilized in the manufacture of the Products, even if such apparatus has been specially converted or adapted for such manufacture and notwithstanding any charges paid by Buyer. Unless otherwise agreed, Seller shall have the right to alter, discard or otherwise dispose of any special tooling or other property in its sole discretion at any time.

10. Buyer's Obligation; Rights of Seller. To secure payment of all sums due or otherwise, Seller shall retain a security interest in the goods delivered and this agreement shall be deemed a Security Agreement under the Uniform Commercial Code. Buyer authorizes Seller as its attorney to execute and file on Buyer's behalf all documents Seller deems necessary to perfect its security interest.

11. Improper use and Indemnity. Buyer shall indemnify, defend, and hold Seller harmless from any claim, liability, damages, lawsuits, and costs (including attorney fees), whether for personal injury, property damage, patent, trademark or copyright infringement or any other claim, brought by or incurred by Buyer, Buyer's employees, or any other person, arising out of: (a) improper selection, improper application or other misuse of Products purchased by Buyer from Seller; (b) any act or omission, negligent or otherwise, of Buyer; (c) Seller's use of patterns, plans, drawings, or specifications furnished by Buyer to manufacture Product; or (d) Buyer's failure to comply with these terms and conditions. Seller shall not indemnify Buyer under any circumstance except as otherwise provided.

12. Cancellations and Changes. Orders shall not be subject to cancellation or change by Buyer for any reason, except with Seller's written consent and upon terms that will indemnify, defend and hold Seller harmless against all direct, incidental and consequential loss or damage. Seller may change product features, specifications, designs and availability with notice to Buyer.

13. Limitation on Assignment. Buyer may not assign its rights or obligations under this agreement without the prior written consent of Seller.

14. Force Majeure. Seller does not assume the risk and shall not be liable for delay or failure to perform any of Seller's obligations by reason of circumstances beyond the reasonable control of Seller (hereinafter "Events of Force Majeure"). Events of Force Majeure shall include without limitation: accidents, strikes or labor disputes, acts of any government or government agency, acts of nature, delays or failures in delivery from carriers or suppliers, shortages of materials, or any other cause beyond Seller's reasonable control.

15. Waiver and Severability. Failure to enforce any provision of this agreement will not waive that provision nor will any such failure prejudice Seller's right to enforce that provision in the future. Invalidation of any provision of this agreement by legislation or other rule of law shall not invalidate any other provision herein. The remaining provisions of this agreement will remain in full force and effect.

16. Termination. Seller may terminate this agreement for any reason and at any time by giving Buyer thirty (30) days written notice of termination. Seller may immediately terminate this agreement, in writing, if Buyer: (a) commits a breach of any provision of this agreement (b) appointments a trustee, receiver or custodian for all or any part of Buyer's property (c) files a petition for relief in bankruptcy on its own behalf, or by a third party (d) makes an assignment for the benefit of creditors, or (e) dissolves or liquidates all or a majority of its assets.

17. Governing Law. This agreement and the sale and delivery of all Products hereunder shall be deemed to have taken place in and shall be governed and construed in accordance with the laws of the State of Ohio, as applicable to contracts executed and wholly performed therein and without regard to conflicts of laws principles. Buyer irrevocably agrees and consents to the exclusive jurisdiction and venue of the courts of Cuyahoga County, Ohio with respect to any dispute, controversy or claim arising out of or relating to this agreement.

18. Indemnity for Infringement of Intellectual Property Rights. Seller shall have no liability for infringement of any patents, trademarks, copyrights, trade dress, trade secrets or similar rights except as provided in this Section. Seller will defend and indemnify Buyer against allegations of infringement of U.S. patents, U.S. trademarks, copyrights, trade dress and trade secrets ("Intellectual Property Rights"). Seller will defend at its expense and will pay the cost of any settlement or damages awarded in an action brought against Buyer based on an allegation that a Product sold pursuant to this Agreement infringes the Intellectual Property Rights of a third party. Seller's obligation to defend and indemnify Buyer is contingent on Buyer notifying Seller within ten (10) days after Buyer becomes aware of such allegations of infringement, and Seller having sole control over the defense of any allegations or actions including all negotiations for settlement or compromise. If a Product is subject to a claim that it infringes the Intellectual Property Rights of a third party, Seller may, at its sole expense and option, procure for Buyer the right to continue using the Product, replace or modify the Product so as to make it noninfringing, or offer to accept return of the Product and return the purchase price less a reasonable allowance for depreciation. Notwithstanding the foregoing, Seller shall have no liability for claims of infringement based on information provided by Buyer, or directed to Products delivered hereunder for which the designs are specified in whole or part by Buyer, or infringements resulting from the modification, combination or use in a system of any Product sold hereunder. The foregoing provisions of this Section shall constitute Seller's sole and exclusive liability and Buyer's sole and exclusive remedy for infringement of Intellectual Property Rights.

19. Entire Agreement. This agreement contains the entire agreement between the Buyer and Seller and constitutes the final, complete and exclusive expression of the terms of sale. All prior or contemporaneous written or oral agreements or negotiations with respect to the subject matter are herein merged.

20. Compliance with Law, U. K. Bribery Act and U.S. Foreign Corrupt Practices Act. Buyer agrees to comply with all applicable laws and regulations, including both those of the United Kingdom and the United States of America, and of the country or countries of the Territory in which Buyer may operate, including without limitation the U. K. Bribery Act, the U.S. Foreign Corrupt Practices Act ("FCPA") and the U.S. Anti-Kickback Act (the "Anti-Kickback Act"), and agrees to indemnify and hold harmless Seller from the consequences of any violation of such provisions by Buyer, its employees or agents. Buyer acknowledges that they are familiar with the provisions of the U. K. Bribery Act, the FCPA and the Anti-Kickback Act, and certifies that Buyer will adhere to the requirements thereof. In particular, Buyer represents and agrees that Buyer shall not make any payment or give anything of value, directly or indirectly to any governmental official, any foreign political party or official thereof, any candidate for foreign political office, or any commercial entity or person, for the purpose of influencing such person to purchase products or otherwise benefit the business of Seller.