Authorized Distributor
MONILEK OILFIELD

E: sales@monilek.com
W: www.monilekgroup.com

Typical Globe Process Valve

Catalog 1010C-YT

aerospace
climate control
electromechanical
filtration
fluid & gas handling
hydraulics
pneumatics
process control
sealing & shielding

ENGINEERING YOUR SUCCESS.

TYPICAL GLOBE PROCESS VALVE

Description

Parker Typical Globe Process Valve designed and verified under ASME B16.34 and API 598 standard,Port connection per as ASME B16.11,B16.25,ASME class 2500&4500 pressure rate,working temperature up to 650℃ provide excellent function performance to high pressure with high temperature pipeline system.

Features

- Integrate structure bonnet, robust safety design
- Integral stuffing box frame Graphite packing
- One step removal of bonnet and packing material
- Rotatable disc provides excellent sealing ability
- Stellite disc and Butt welding per ANSI B16.11/ANSI B16.25 standard
- Material: ASTM A105,ASTM A182 316H/F91/F92/F22

Remarks: Any other requirement, pls contact Parker

Configuration

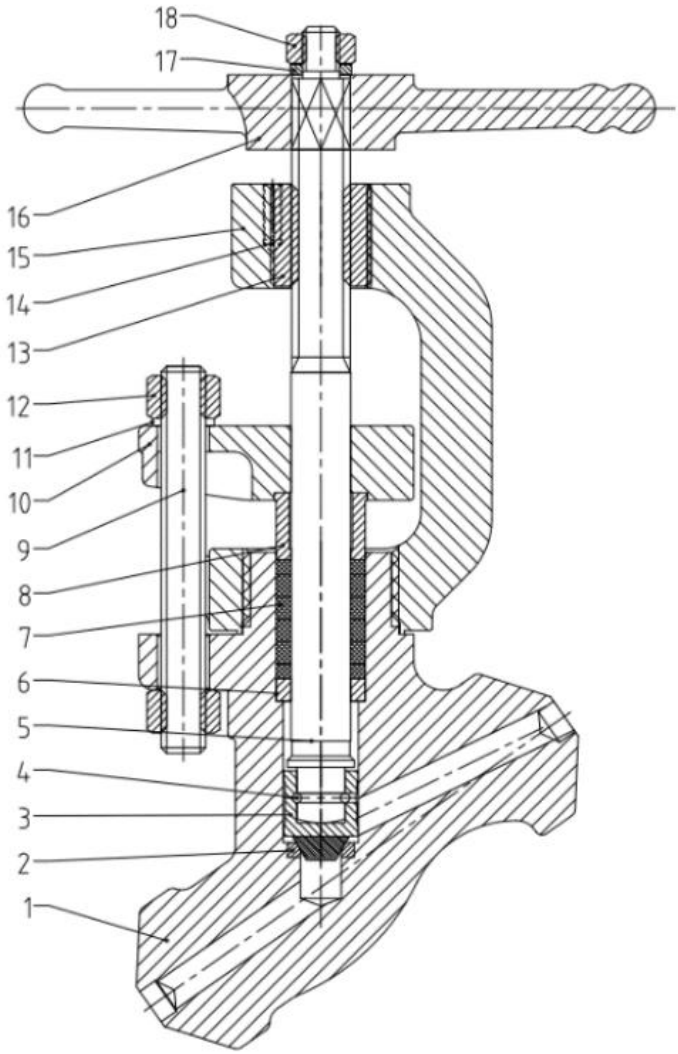

NO.	Description
1	Body
2	Seat
3	Disc
4	Ball
5	Stem
6	Packing Seat
7	Packing
8	Packing Gland
9	Packing Adjust Screw
10	Packing Adjuster
11	Washer
12	Nut
13	Bushing
14	Set Screw
15	Bracket
16	Hand Wheel
17	Washer
18	Nut

Working Pressure (Class 4500)

F91 forgings		F91 forgings	
B16.34-2013 Standard Class		**B16.34-2013 Special Class**	
Working Pressure by Class,bar		Working Pressure by Class,bar	
Temp℃	Class(4500)	Temp℃	Class(4500)
-29 to 38	775.7	-29 to 38	775.7
50	775.7	50	775.7
100	773.0	100	775.7
150	752.8	150	775.7
200	729.8	200	775.7
250	694.8	250	775.7
300	642.6	300	775.7
325	619.6	325	775.7
350	603.3	350	771.4
375	581.8	375	757.4
400	548.5	400	753.2
425	524.7	425	744.6
450	507.0	450	707.6
475	474.8	475	641.3
500	423.0	500	535.4
538	375.8	538	435.1
550	374.2	550	435.1
575	359.1	575	428.8
600	292.5	600	365.6
625	219.1	625	273.8
650	148.9	650	186.2

Working Pressure (Class 4500)

F92 forgings		F92 forgings	
B16.34-2013 Standard Class		**B16.34-2013 Special Class**	
Working Pressure by Class,bar		Working Pressure by Class,bar	
Temp℃	Class(4500)	Temp℃	Class(4500)
-29 to 38	775.7	-29 to 38	775.7
50	775.7	50	775.7
100	773.0	100	775.7
150	752.8	150	775.7
200	729.8	200	775.7
250	694.8	250	775.7
300	642.6	300	775.7
325	619.6	325	775.7
350	603.3	350	771.4
375	581.8	375	757.4
400	548.5	400	753.2
425	524.7	425	744.6
450	507.0	450	707.6
475	474.8	475	641.3
500	423.0	500	535.4
538	375.8	538	435.1
550	374.2	550	435.1
575	359.1	575	428.8
600	321.4	600	401.9
625	273.8	625	342.8
650	198.6	650	248.2

Working Pressure (Class 4500)

F22 forgings		F22 forgings	
B16.34-2013 Standard Class		**B16.34-2013 Special Class**	
Working Pressure by Class,bar		Working Pressure by Class,bar	
Temp℃	Class(4500)	Temp℃	Class(4500)
-29 to 38	775.7	-29 to 38	775.7
50	775.7	50	775.7
100	773.0	100	774.3
150	752.8	150	764.3
200	729.8	200	753.4
250	694.8	250	749.7
300	642.6	300	746.7
325	619.6	325	743.9
350	603.3	350	738.1
375	581.8	375	731.3
400	548.5	400	731.3
425	524.7	425	731.3
450	507.0	450	707.6
475	474.8	475	641.3
500	423.0	500	535.4
538	276.6	538	345.7
550	234.5	550	293.1
575	157.9	575	197.4
600	103.3	600	129.1
625	66.9	625	83.7
650	42.6	650	53.2

Working Pressure (Class 4500)

F316H forgings		F316H forgings	
B16.34-2013 Standard Class		**B16.34-2013 Special Class**	
Working Pressure by Class,bar		Working Pressure by Class,bar	
Temp℃	Class(4500)	Temp℃	Class(4500)
-29 to 38	744.6	-29 to 38	775.7
50	721.7	50	762.3
100	632.9	100	706.4
150	577.4	150	644.4
200	534.9	200	597.0
250	500.6	250	558.8
300	474.3	300	529.3
325	463.3	325	517.0
350	454.9	350	507.7
375	448.2	375	500.2
400	441.6	400	492.9
425	437.1	425	487.9
450	432.7	450	482.9
475	430.1	475	480.0
500	423.0	500	475.7
538	375.8	538	435.1
550	374.2	550	435.1
575	359.1	575	428.8
600	298.6	600	373.2
625	237.2	625	296.5
650	189.9	650	237.4

Dimension

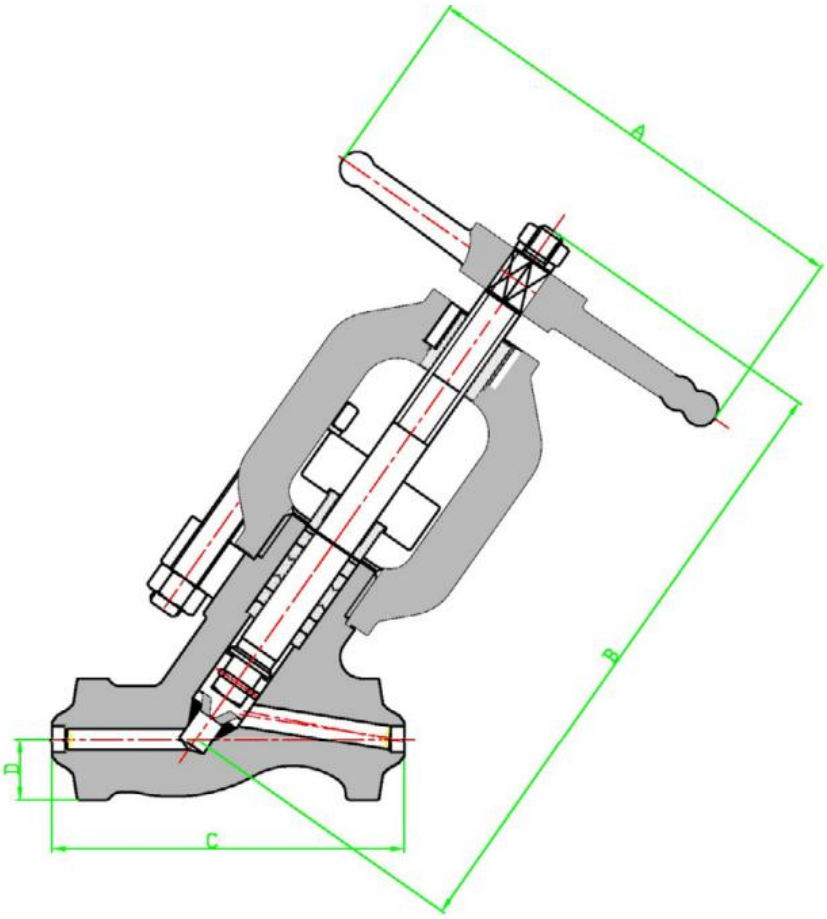

A	B	C	D	Weight(Kg)
150	236	115	21	5.4

How to order

BW10 - YT3/8 - G - F91 - 4500A

- **BW** — Port: BW-Butt Welding, SW-Socket
- **10** — Port: 1/2"(10mm) - 1-1/4"(30mm)
- **YT3/8** — Typical Globe Process Valve
- **G** — Packing: Graphite
- **F91** — Material: F91, F92, F316, F316H, F22, A105
- **4500** — Class: 4500CL
- **A** — Type: A-Modular, B-Solid

Contact us:

PARKER HANNIFIN INSTRUMENTATION GROUP

⚠ WARNING

FAILURE, IMPROPER SELECTION OR IMPROPER USE OF THE PRODUCTS AND/OR SYSTEMS DESCRIBED HEREIN OR RELATED ITEMS CAN CAUSE DEATH, PERSONAL INJURY AND PROPERTY DAMAGE.

This document and other information from Parker Hannifin Corporation, its subsidiaries and authorized distributors provide product and/or system options for further investigation by users having technical expertise. It is important that you analyze all aspects of your application and review the information concerning the product or system in the current product catalog. Due to the variety of operating conditions and applications for these products or systems, the user, through its own analysis and testing, is solely responsible for making the final selection of the products and systems and assuring that all performance, safety and warning requirements of the application are met.

The products described herein, including without limitation, product features, specifications, designs, availability and pricing, are subject to change by Parker Hannifin Corporation and its subsidiaries at any time without notice.

Offer of Sale

The items described in this document are available for sale by Parker Hannifin Corporation, its subsidiaries or its authorized distributors. Any sale contract entered into by Parker will be governed by the provisions stated in Parker's standard terms and conditions of sale (copy available upon request).

Authorized Distributor
MONILEK OILFIELD

MONILEK
OILFIELD

E: sales@monilek.com
W: www.monilekgroup.com

Parker