Building connections that last™

ASC® Engineered Solutions

Sharpe® Series 80/89 & FS80/FS89

ASME Class 800 & 300, 3–Piece Ball Valve Datasheet

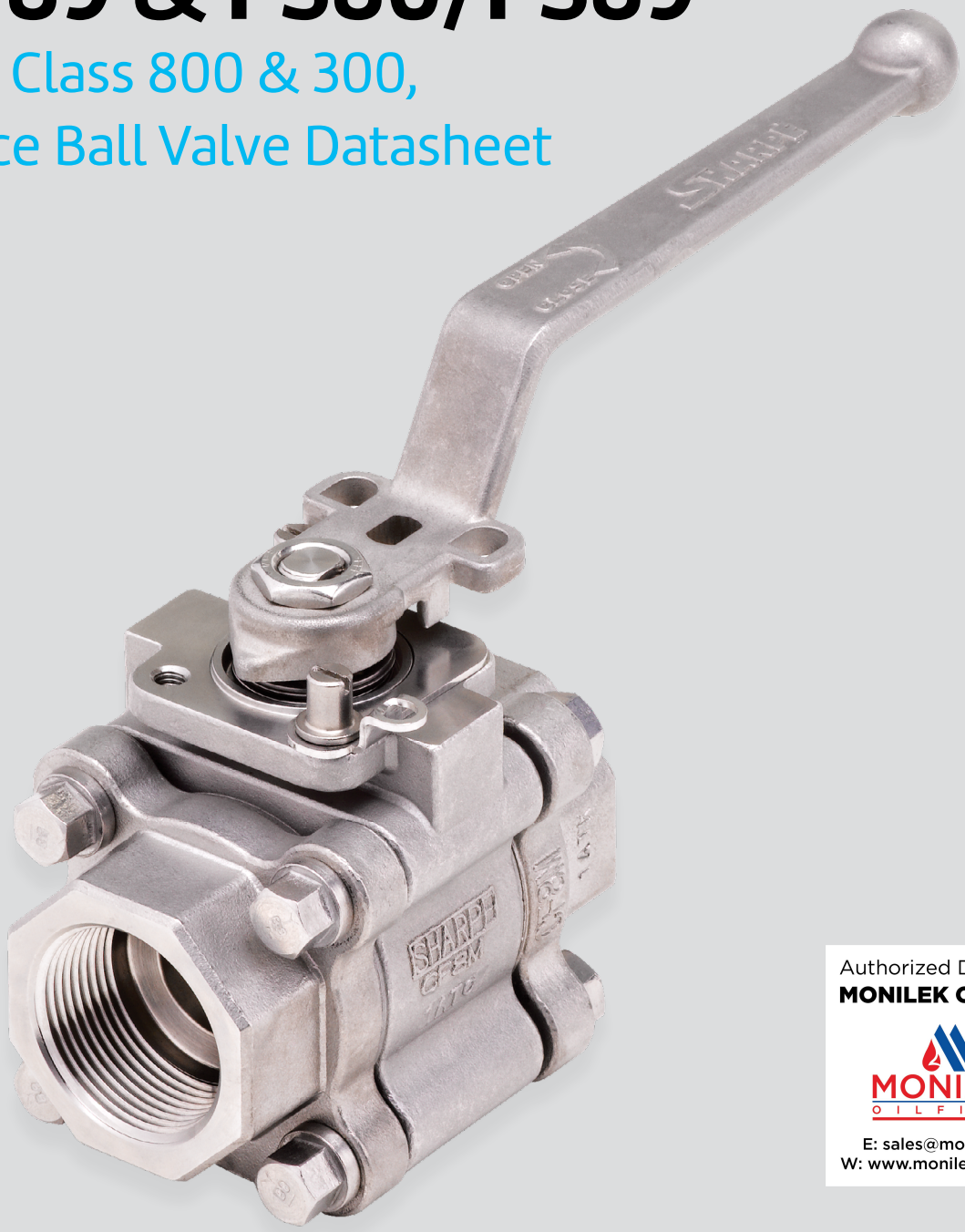

Authorized Distributor
MONILEK OILFIELD

MONILEK OILFIELD

E: sales@monilek.com
W: www.monilekgroup.com

SHARPE®
An ASC Engineered Solution

ASME Class 800 & 300, 3-Piece Ball Valves

Sharpe® Series 80/89 & FS80/FS89

Overview

A wider range of applications, functionality, and control features.

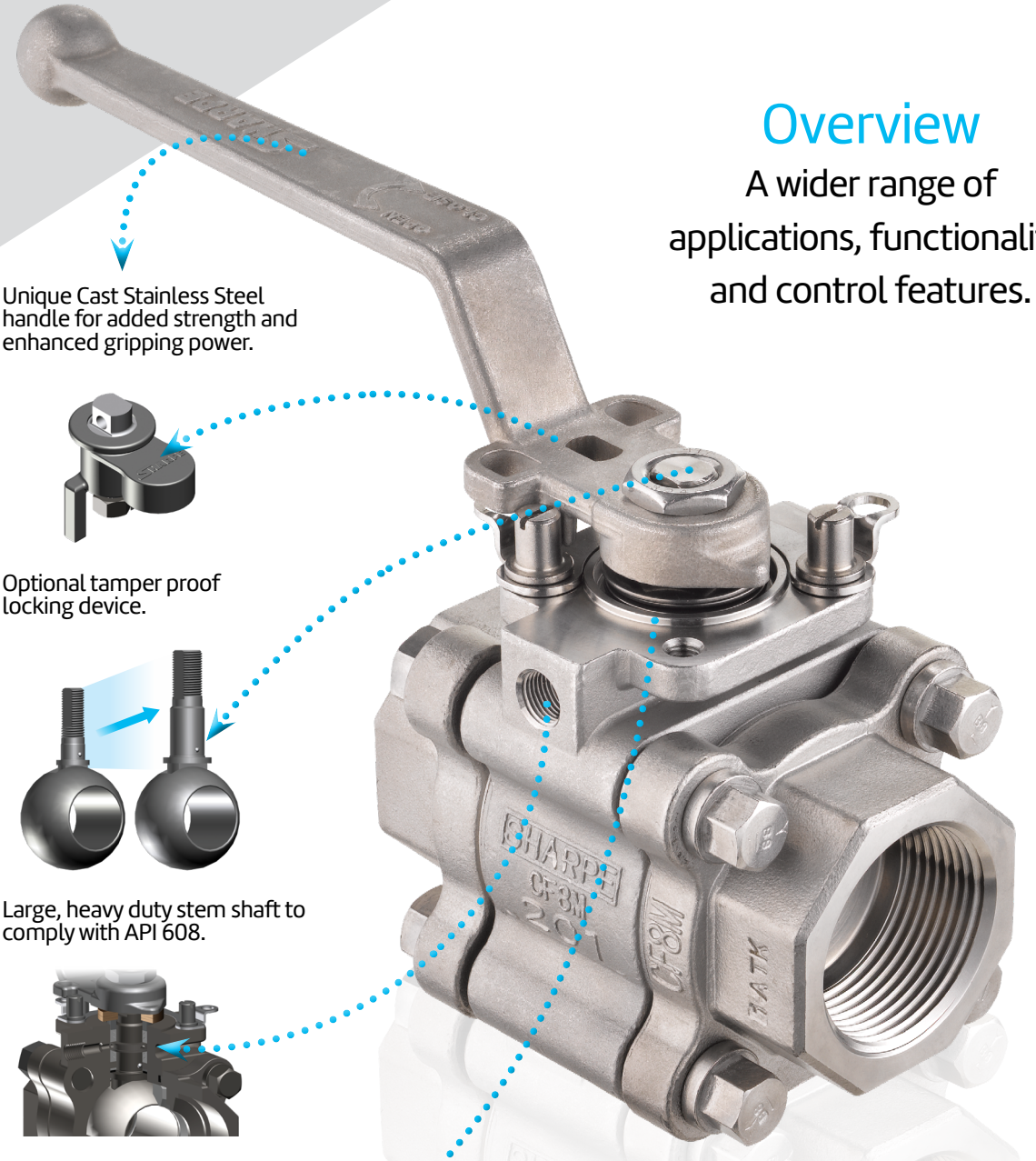

Unique Cast Stainless Steel handle for added strength and enhanced gripping power.

Optional tamper proof locking device.

Large, heavy duty stem shaft to comply with API 608.

Optional fugitive emission ports for monitoring.

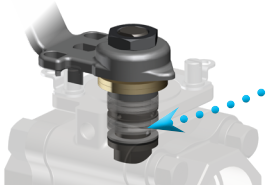

Superior stem seal configuration for leakage protection and improved environmental performance.

The Series 80/FS80 Standard Port and Series 89/FS89 Full Port three-piece ball valves are designed for high performance, long cycle life and exceptional durability. The valves are fully compliant to API 608 Class 800 for sizes up to 2½" Standard Port, 2" Full Port, and Class 300 up to 4" Standard Port, 3" Full Port.

asc-es.com

Building connections that last™

FC-DS-SERIES-80-89-FS80-FS89-v04 20240325

ASME Class 800 & 300,
3-Piece Ball Valves

Sharpe® Series
80/89 & FS80/FS89

Features

Important Construction Components

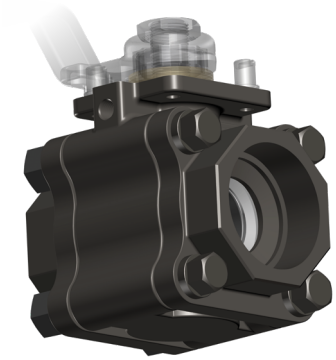

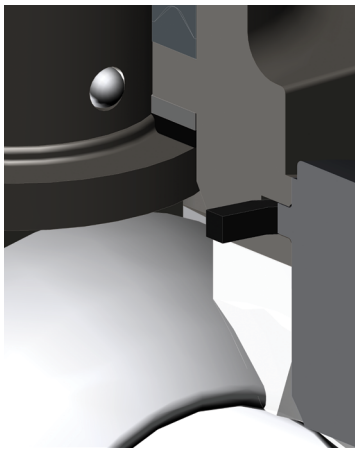

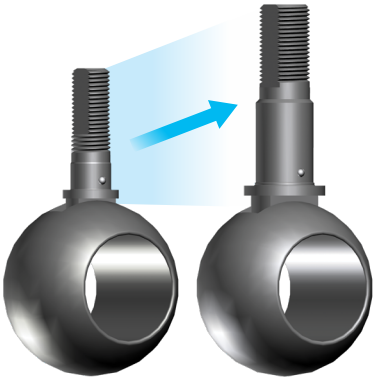

Body Material

316 Stainless Steel, Carbon Steel, Alloy 20, or 254 SMO®.

Rugged Body and End Pieces

Rugged body with higher and deeper stem packing area to allow for more stem seals.

Two cast bosses for optional fugitive emission ports.

Larger ISO 5211 bolt pattern for handling higher valve torques.

Extra thick end pieces to comply with Class 800 for sizes up to 2½"

Standard Port, 2" Full port.

Tongue and Groove Design

Fully encapsulated body seals, allowing ends to be welded in-line, without time consuming and labor intensive disassembly.

Design compensates for bolt expansion and reduces the chance of external leakage.

Helps prevent seal ruptures in high pressure, cryogenic or steam applications.

Heavy Duty Stem Design

Stem diameters have been increased to meet the higher torque requirements of the most demanding applications.

Stem to ball contact area is wider and larger, allowing the valve to be used for higher torque applications.

Design allows for the use of 316 stainless steel stem material, rather than 17-4PH, for superior corrosion resistance.

asc-es.com

Building connections that last™

SHARPE®
An ASC Engineered Solution

FC-DS-SERIES-80-89-FS80-FS89-v04 20240325

ASME Class 800 & 300,
3-Piece Ball Valves

Sharpe® Series
80/89 & FS80/FS89

Features

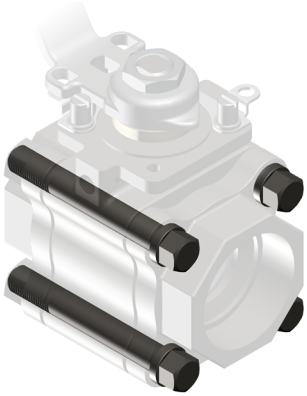

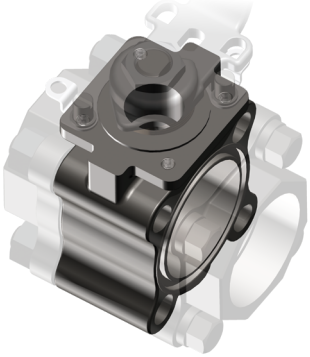

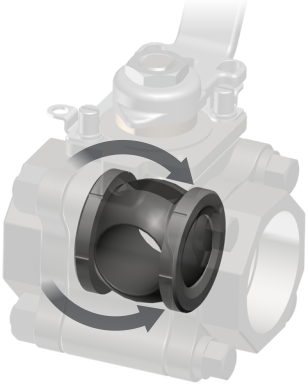

Larger Bolt Design

Larger diameter body bolts to comply with Class 800 for sizes up to 2½" Standard port, 2" Full Port.

Encapsulated body bolts for added protection and wash down applications.

Optional bolts and nuts to comply with NACE MR-0175/ISO 15156.

ISO 5211 Top-Works Compatibility

The top-works offer compatibility for mounting a wide range of accessories.

Sharpe® actuators and accessories may be retrofitted on existing valves without disruption of line integrity.

Floating Ball Design

Solid stainless steel ball with wide selection of configurations for a variety of applications including; diverting, mixing, controlling, flushing, purging and more.

Floating ball seals on the downstream seat,reducing torque and assuring a bubble-tight shutoff.

Unique Handle

A unique cast stainless steel handle specially designed to accommodate locking devices and high operating torques.

A comfortable, ergonomic, non slip hand-grip design.

Handle length according to API 608 requirements.

asc-es.com

Building connections that last™

Valve Trim

Operational flexibility and process compatibility of stem assemblies

Stem Assemblies

Various stem assemblies are available based on application requirements.

Standard – a multiple pack of Chevron "V" shaped stem seals for better sealing in TFM®, PTFE, or Nova materials.

High Temperature – double pack of flexible graphite seals for sealing under high temperature conditions.

Fugitive Emission – 2-pack stem seals in PTFE or graphite, with lantern ring to allow leak detection through the emission port(s).

High Cycle – unique design for demanding high cycle applications that consist of multi-system sealing devices in the stem bonnet.

Stem Sealing

Increased Stem Sealing Area – Allows for a range of sealing combinations for severe applications and other stringent design demands.

Live-Loaded Stem – Two pairs of concave and opposing spring washers provide additional compensation for seal wear.

Safe Design – Blowout proof stem ensures the stem cannot be blown out by accidental medium pressure rise.

Wear Resistance – The thrust washer is either metallic for higher temperatures and wear resistance, or PEEK for lower temperatures.

Anti-Static – Static build-up discharges by anti-static device in stem or the metallic thrust washer.

Stem Trim for Sizes Greater Than 3"

According to API 608 all valve sizes greater than 3" have an adjustable packing gland with thru bolt holes. Gland bolts pass through the holes and thread to the valve body. The position stops are bolted to the body and are not integral to the packing gland, gland flange or gland bolting.

Graphite packing for Fugitive Emission service

Graphite packing (I) has been type-tested to API 641 1st Edition, fulfilling valve qualification to API 608 6th edition.

Standard Stem Assembly

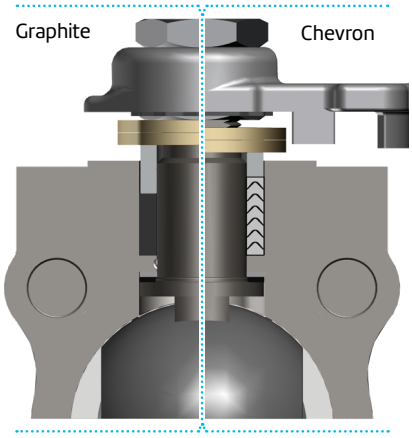

Fugitive Emission Assembly

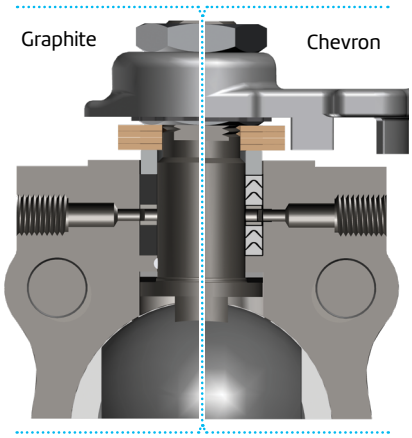

High Cycle Assembly

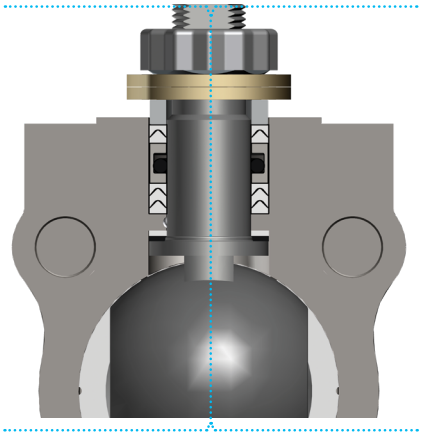

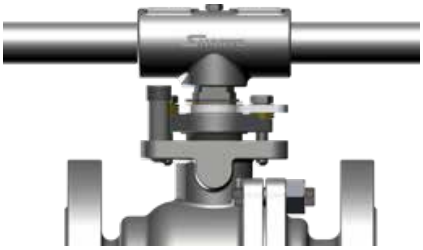

Seat & Seal

Options for demanding design solutions

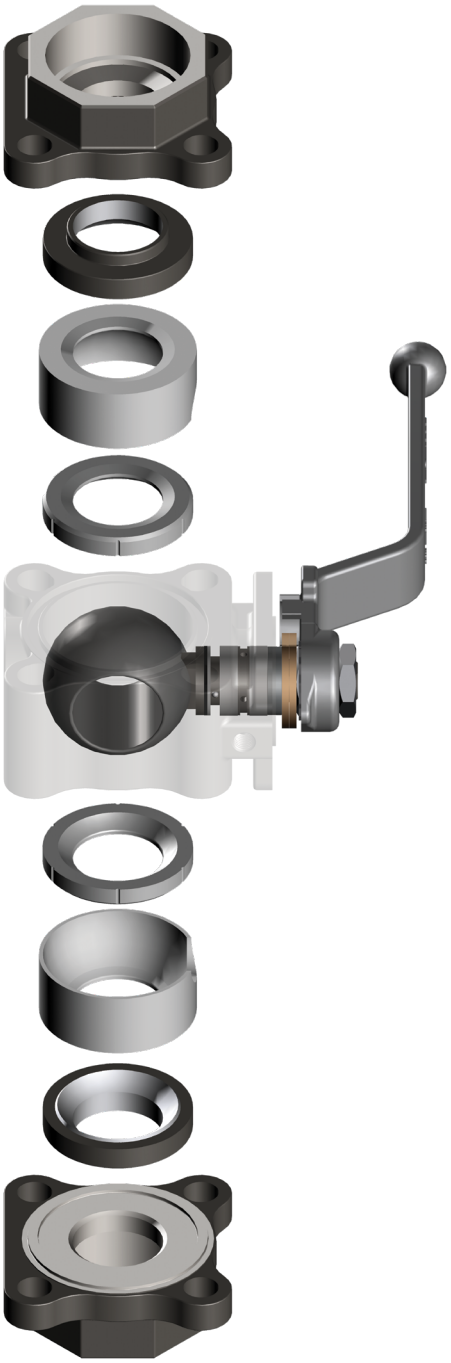

Choice of Seats and Seals

A wide variety of seat and seal materials are readily available for the most demanding applications including; TFE, RTFE, TFM®, Nova, Super Nova, Delrin®, PEEK, Buna, Graphite, Impregnated Graphite, EPDM and Viton®.

Seat Designs

All the seats are designed with circumferential relief slots to equalize body pressure and assure leak-tight sealing.

Aside from standard seats, Sharpe® also supplies seats designated for specific applications, including, but not limited to:

Cavity Filler Seats:

Seats that eliminate the voids in the valve body cavity to minimize solidification of the media.

Metal Seats:

See datasheets for Sharpe® Series M80/M89 (metal-seated, 3-piece ball valves) and Series M70/M74 (metal seated, flanged ball valves).

Accessories

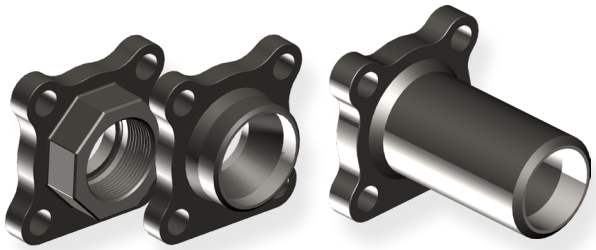

End Connection Combinations [End Style Code FB]

Customize your valve with the end connections of your choice including mixed ends. Threaded, socket weld, butt weld and extended butt weld ends are readily available.

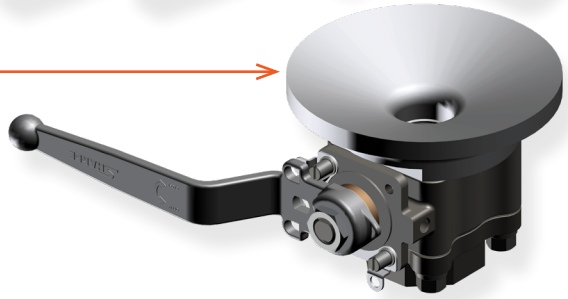

Tank Bottom Valves [see End Style Codes]

Valves with special dished flanges for welding directly to tank bottoms.

Minimizes the static volume common with standard fittings.

Steam Jackets [see End Style Codes]

Steam jackets maintain a more uniform process temperature. Users can flow steam or oil between the jacket and the valve body.

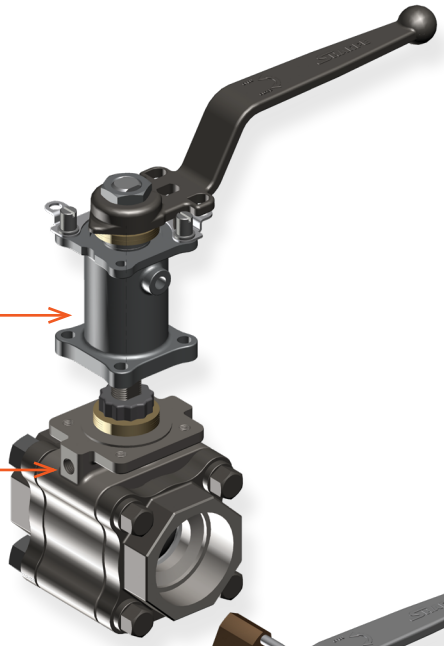

Spring Return Handle [Option Code DMH]

Spring return handle ensures that the valve cannot be left open (or closed).

Lockable Stem Extension [Option Code L]

An option to move the valve top interface away from the pipeline to accommodate insulation.

Integrated Fugitive Emission Ports [Option Code F1 or F2]

One or two ports can be drilled and tapped into our specially designed body.

Ports align with a lantern ring precisely located between an upper and lower set of stem packing to allow monitoring of emissions.

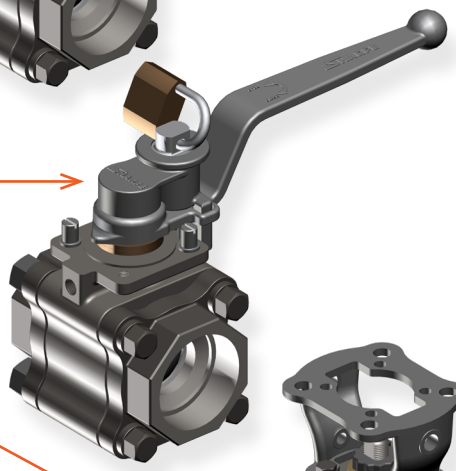

Tamper Proof Locking Device [Option Code TP]

Upgrade from the standard locking device found on all Sharpe Valves to our unique spring loaded Tamper Proof Locking Device.

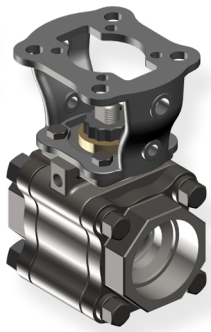

Cast Mounting Brackets [see End Style Codes]

Cast stainless steel brackets with hole patterns conforming to ISO 5211 on top and bottom for actuation mounting.

Safety locking holes for securing valves during maintenance (requires special couplers).

Aesthetic design offers wide tool clearance for installation and open visual.

ASME Class 800 & 300, 3-Piece Ball Valves

Sharpe® Series 80/89 & FS80/FS89

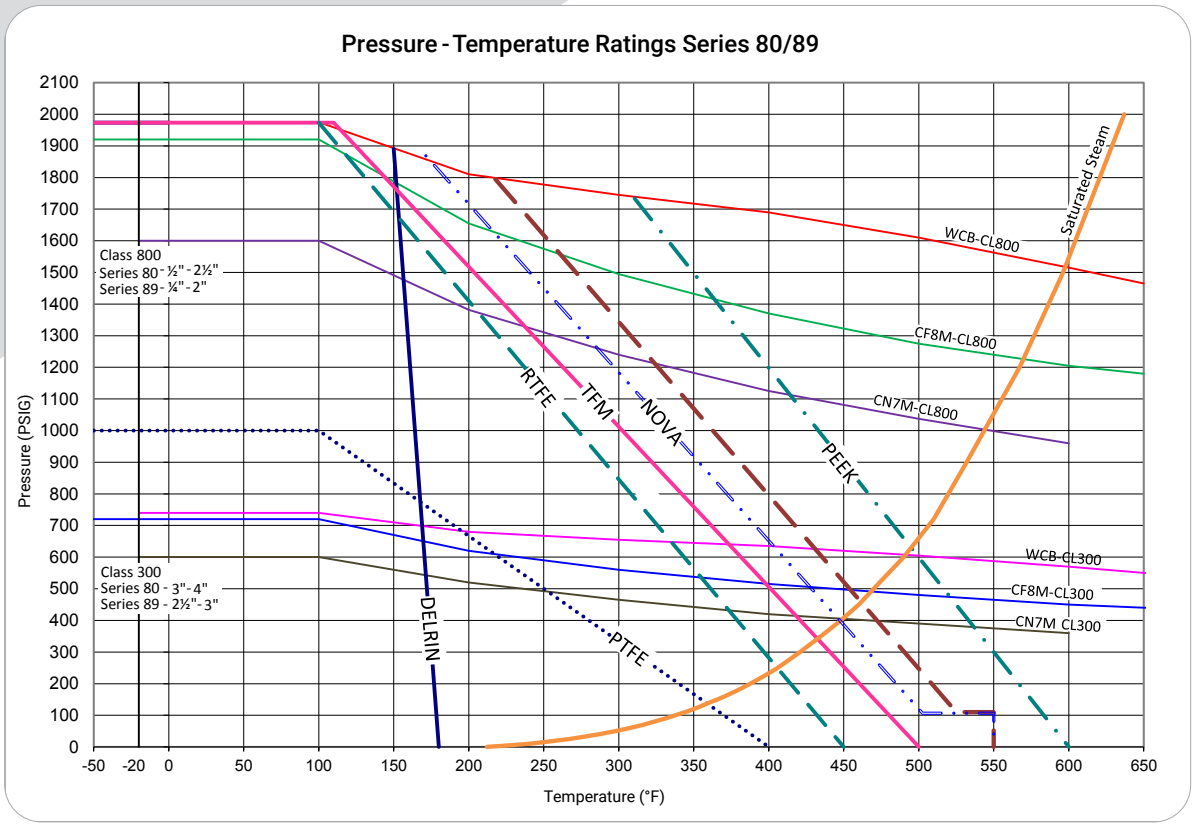

Standard Port	Full Port
Class 800 ½" – 2½"	Class 800 ¼" – 2"
Class 300 3" – 4"	Class 300 2½" – 3"

Note:
The practical pressure-temperature rating of a valve is determined by the limitations of the body material and seat/seal material. An application's maximum pressure-temperature conditions must be below the body rating curve, and left of the seat material curve. The valve body ratings are based on ASME B16.34 rating for materials. This graph is based on laboratory testing and installed field experience. The seat ratings depend on the material, design, application and function. For higher pressure rating above 2000 psig, please consult with Sharpe Valves.

Sharpe® Seat Materials

T – Virgin PTFE
Polytetrafluoroethylene is a Fluorocarbon-based polymer. This seating material has excellent chemical resistance and low coefficient of friction. Its temperature range is -100°F to 400°F (-73°C to 204°C). Color - white.

M – TFM® PTFE
Dyneon® TFM PTFE is a second generation PTFE with improved chemical and heat resistant properties over first generation PTFE and exhibits better stress recovery.
Its temperature range is -100°F to 500°F (-73°C to 260°C)
Color - white.

R – Reinforced Polytetrafluoroethylene
(RTFE 15% Glass Filled). PTFE's mechanical properties are enhanced by adding filler material to provide improved strength, stability and wear resistance. Its temperature range is from -320°F to 450°F (-196°C to 204°C).
Color-off-white.

N – Nova
A PTFE base filled with glass amorphous carbon powder and graphite. It has a lower thermal contraction / expansion than PTFE, and is ideal for steam or thermal fluid applications. Its temperature range is from -50°F to 550°F (-45°C to 288°C).
Color - black.

B – Super Nova
A free-flowing compound based on TFM® containing electro-graphitized carbon. It features increased thermal dimensional stability and surface hardness, improved deformation under load, reduced friction and wear, and good chemical stability. It has a high limiting oxygen index (LOI), low coefficient of friction, very good mechanical properties and exceptional temperature resistance. It is used as a seat material in chemical processing and automotive industries. It is ideal to use with steam and thermal fluid applications up to 550°F (288°C) and as low as -40°F (-40°C). Color - black.

D – Delrin®
This material is very rigid and does not undergo cold flow. It has a combination of strength, stiffness, hardness, dimensional stability, toughness, fatigue resistance, abrasion resistance, low wear and low friction. It can withstand pressure up to 6000 PSIG depending on valve size and class rating. Has a temperature range of -70°F to 180°F (-57°C to 82°C).

P – PEEK (Unfilled) Polyetheretherketone
PEEK Polymer offers a unique combination of chemical, mechanical and thermal properties. Excellent for water and steam applications at elevated temperatures up to 600°F (315°C). Color - beige.

Other seat materials
Other seat material are available, please contact us with your requirements.

ASME Class 800 & 300, 3–Piece Ball Valves

Sharpe® Series 80/89 & FS80/FS89

Parts & Materials

Series 80/FS80 ½" – 2"
Series 89/FS89 ¼" – 1½"

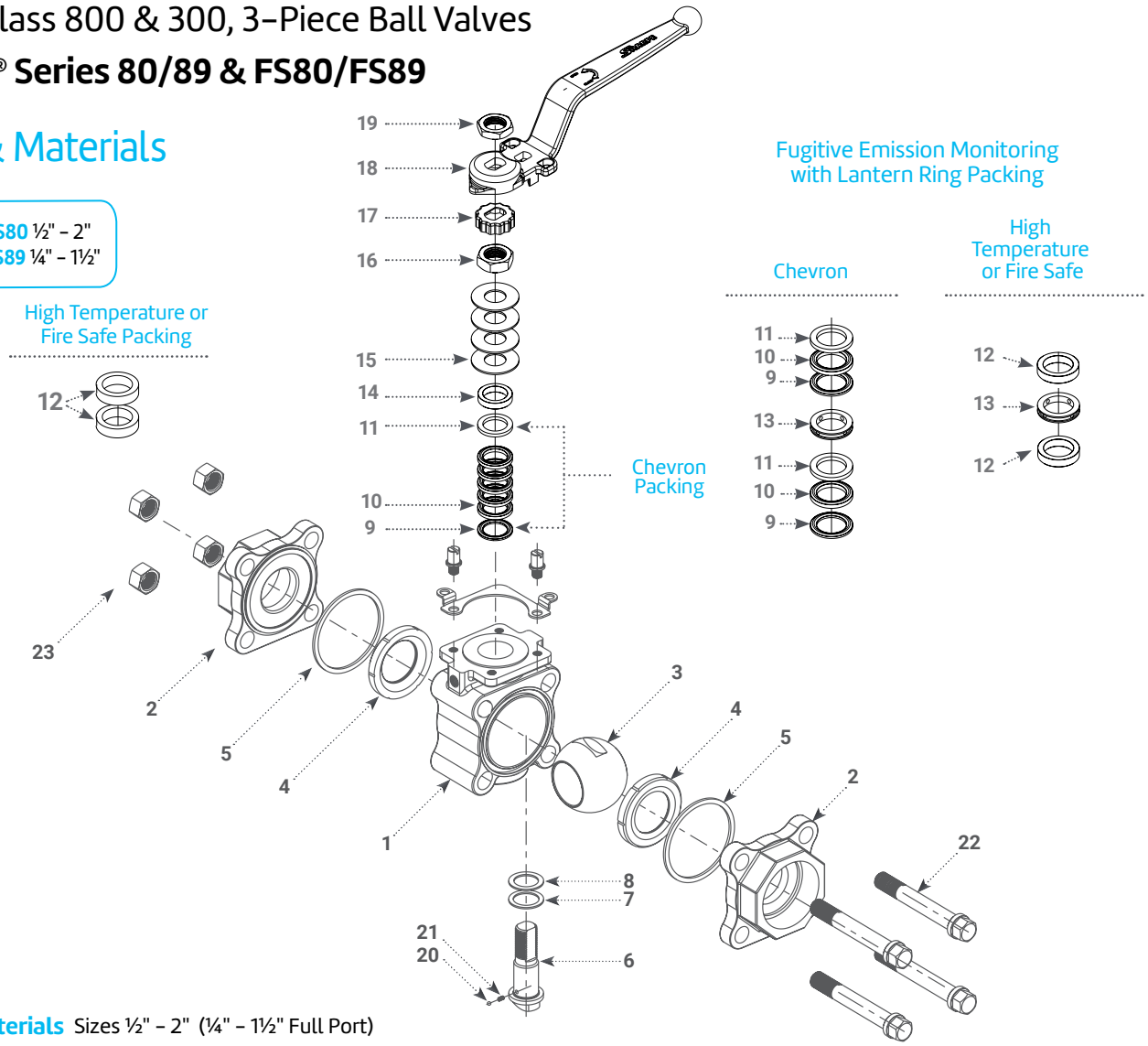

Parts & Materials Sizes ½" – 2" (¼" – 1½" Full Port)

Item	Description	Material	Qty
1**	Body	Carbon Steel: ASTM A216 WCB 316 Stainless Steel: ASTM A351 CF8M Alloy 20: ASTM A351 CN7M SMO 254®: ASTM A351 CK3MCuN	1
2**	End Piece	Carbon Steel: ASTM A216 WCB 316 Stainless Steel: ASTM A351 CF8M 316L Stainless Steel: ASTM A351 CF3M (used for stainless steel weld ends) Alloy 20: ASTM A351 CN7M SMO 254®: ASTM A351 CK3MCuN	2
3**	Ball	316 Stainless Steel Alloy 20 SMO 254®	1
4*	Seat	PTFE, RTFE, TFM®, Nova, Super Nova, PEEK, DELRIN®	2
5*	Body Seal	Buna, EPDM, Graphite, Impregnated Graphite, PTFE, TFM, Viton®	2
6	Stem	316 Stainless Steel, Alloy 20, SMO 254®, 17-4PH	1
6	Stern	316 Stainless Steel, Alloy 20, 17-4PH	1
7*	Thrust Bearing - Bottom	Nova, PEEK	1 or 2
8*	Thrust Bearing - Top	Nova	1
9*	Stem Packing - Bottom	PTFE, TFM®, Nova	2
10*	Stem Packing - Middle	PTFE, TFM®, Nova	2

Item	Description	Material	Qty
11*	Stem Packing - Top	PTFE, TFM®,Nova	2
12*	Stem Packing	Graphite (FS or high temperature)	2
13	Lantern Ring	300 Series Stainless Steel	1
14	Gland	300 Series Stainless Steel	1
15*	Belleville Washer	17-7PH	4
16	Packing Nut	300 Series Stainless Steel	1
17	Lock Tab	300 Series Stainless Steel	1
18	Handle	304 Stainles Steel ASTM A351 CF8	1
19	Handle Nut	300 Series Stainless Steel	1
20	Anti-Static Ball	300 Series Stainless Steel	2
21	Anti-Static Spring	Hard Drawn Stainless Steel	2
22	Bolt	A193 Gr B8	4
23	Nut	300 Series Stainless Steel	4
24	Lock Plate	300 Series Stainless Steel	1
25	Stop pin	300 Series Stainless Steel	2

Note:
The quantities listed in the stem arrangement are for fugitive emission assemblies. Standard stem assemblies carry more seals and no lantern rings.
* Repair Kit Item.
**Other materials available, call to discuss your requirements.

ASME Class 800 & 300, 3-Piece Ball Valves

Sharpe® Series 80/89 & FS80/FS89

Parts & Materials

Series 80/FS80 3"
Series 89/FS89 2½" – 3"

Series 80/FS80 2½"
Series 89/FS89 2"

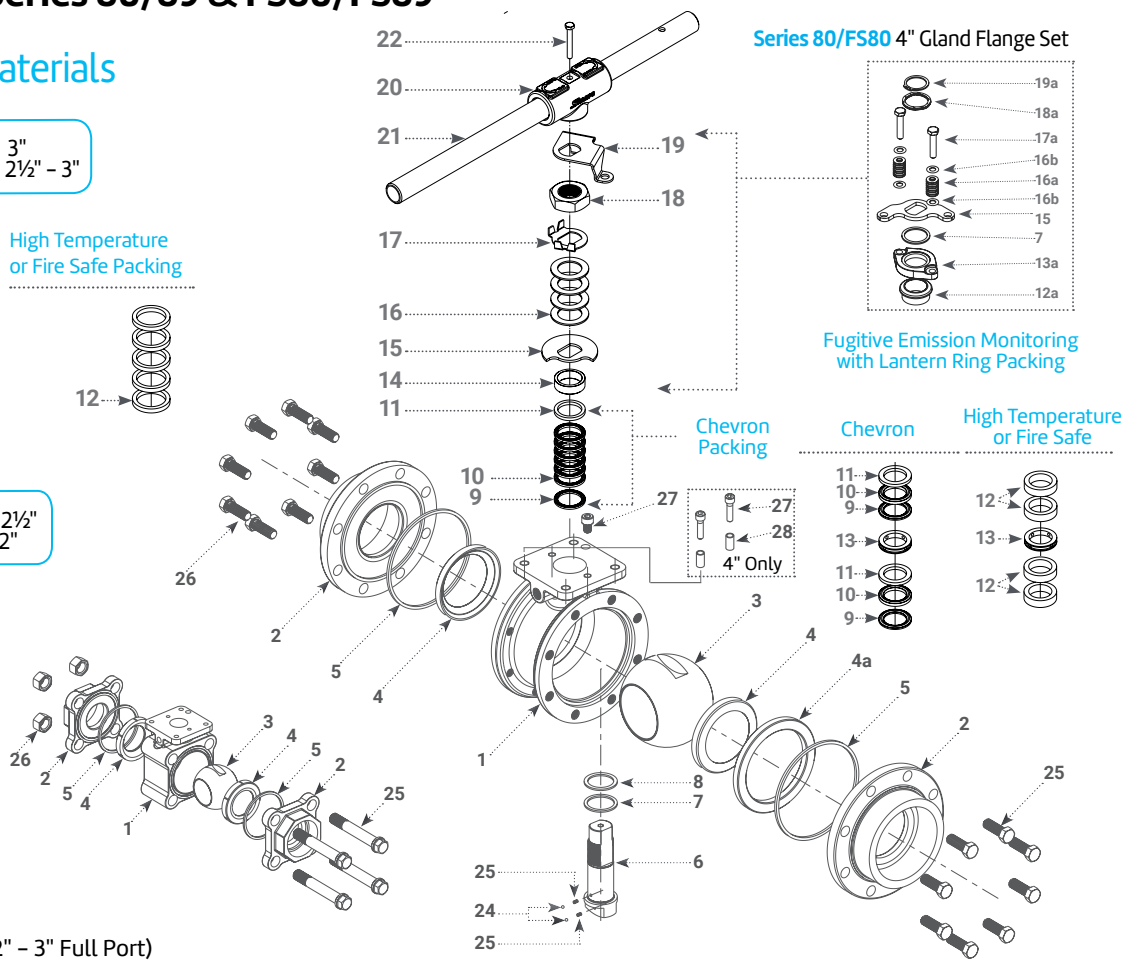

Sizes 2½" – 4" (2" – 3" Full Port)

Item	Description	Material	Qty
1**	Body	Carbon Steel: ASTM A216 WCB, 316 Stainless Steel: ASTM A351 CF8M, Alloy 20: ASTM A351 CN7M	1
2**	End Piece	Carbon Steel: ASTM A216 WCB, 316 Stainless Steel: ASTM A351 CF8M, 316L Stainless Steel: ASTM A351 CF3M (used for Stainless Steel weld ends) Alloy 20: ASTM A351 CN7M	2
3**	Ball	316 Stainless Steel Alloy 20	1
4*	Seat	PTFE, RTFE, TFM®, Nova, Super Nova, PEEK, DELRIN®	2
4a	Seat Ring	Carbon Steel: ASTM A216 WCB, 316 Stainless Steel: ASTM A351 CF8M	1
5	Body Seal	Buna, EPDM, Graphite, Impregnated Graphite, PTFE, TFM, Viton®	2
6	Stem	316 Stainless Steel, Alloy 20, 17-4PH	1
7*	Thrust Bearing - Bottom	Nova, PEEK	1 or 2
8*	Thrust Bearing - Top	Nova	1
9*	Stem Packing - Bottom	PTFE, TFM®, Nova	2
10*	Stem Packing - Middle	PTFE, TFM®, Nova	2
11*	Stem Packing - Top	PTFE, TFM®, Nova	2
12*	Stem Packing	Graphite (FS or high temperature)	4
12a	Gland Position Ring	300 Stainless Steel	1
13	Lantern Ring	300 Stainless Steel	1
13a	Gland (Size 4" Only)	316 Stainless Steel A351 CF8M	1
14	Gland	300 Series Stainless Steel	1

Item	Description	Material	Qty
15	Stop Plate	300 Series Stainless Steel	1
16*	Belleville Washer	17-7PH	4
16a	Belleville Washer	17-7PH	16
16b	Washer	300 Stainless Steel	4
17	Lock Tab	300 Stainless Steel	1
17a	Gland Bolt	300 Stainless Steel	2
18	Packing Nut	300 Stainless Steel	1
18a	Retainer Spring	300 Stainless Steel	1
19	Packing Nut	300 Stainless Steel	1
19a	Retainer Lock	300 Stainless Steel	1
20	Wrench Block	304 Stainless Steel ASTM A351CF8	1
21	Handle Pipe	Zinc Plated Carbon Steel/Stainless Steel	1
22	Wrench Bolt	300 Series Stainless Steel	1
23	Anti-Static Ball	300 Series Stainless Steel	2
24	Anti-Static Spring	Hard Drawn Stainless Steel	2
25	Bolt	A193 Gr B8	4/16
26	Nut	300 Series Stainless Steel	4/na
27	Stop Pin	300 Series Stainless Steel	2
28	Stop Pin Sleeve	300 Series Stainless Steel	2

Note:
The quantities listed in the stem arrangement are for fugitive emission assemblies. Standard stem assemblies carry more seals and no lantern rings.

* Repair Kit Item.
**Other materials available, call to discuss your requirements.

ASME Class 800 & 300, 3-Piece Ball Valves

Sharpe® Series 80/89 & FS80/FS89

Series 80/FS80 ½" – 2"
Series 89/FS89 ¼" – 1½"

Optional
EMISSION PORT THREAD
⅛" NPT (Sizes ¾" to 2")

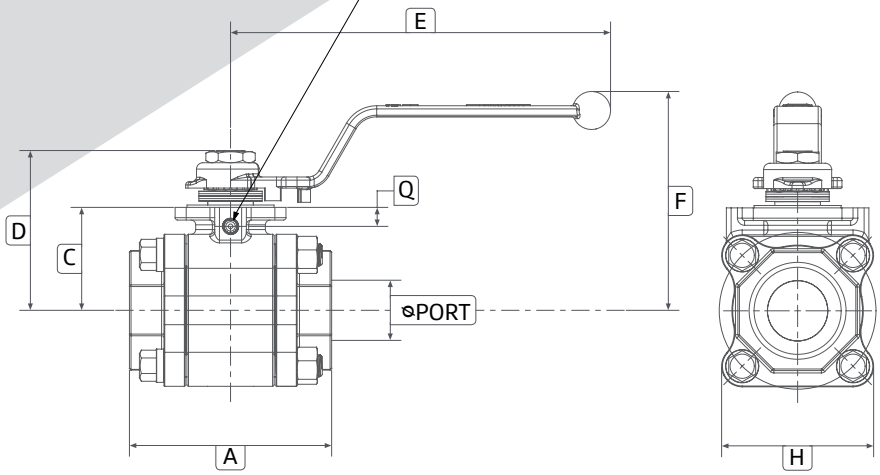

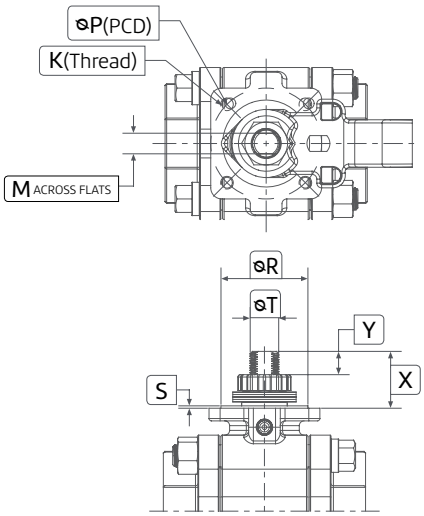

Dimensions for Actuator Mounting

Series 80/FS80 2½" – 4"
Series 89/FS89 2" – 3"

Optional
EMISSION PORT THREAD
¼" NPT (Sizes 2½" to 4")

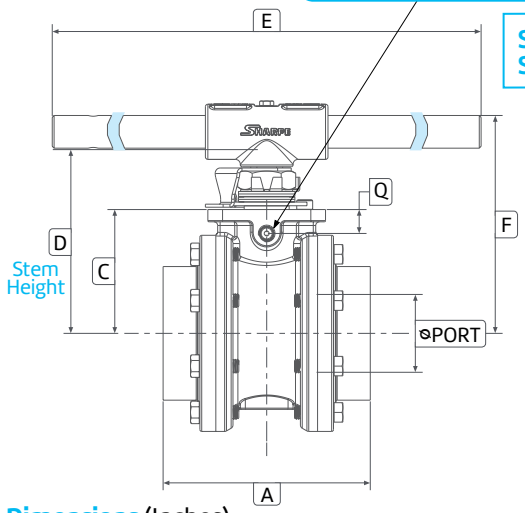

Series 80/FS80 3" – 4"
Series 89/FS89 2½" – 3"

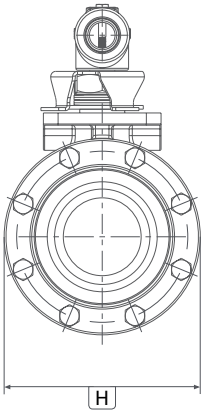

Series 80/FS80 2½"
Series 89/FS89 2"

Size 2½"

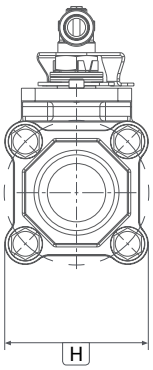

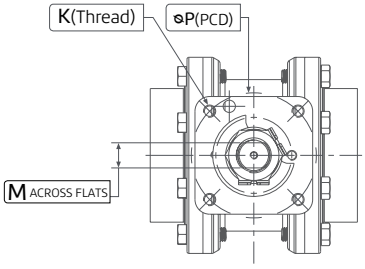

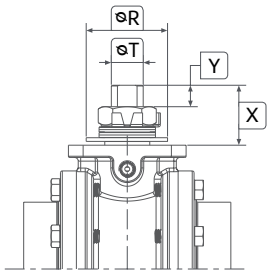

Dimensions for Actuator Mounting

Dimensions (Inches)

Standard Port 80/FS80	Full Port 89/FS89	ØPORT	TE/SW BW A	Ext BW Full Port A	C	D	E	F	H	K (Thread)	M	ØP (PCD)	Q	ØR	S	ØT	X	Y
½"	¼", ⅜"	0.44	2.91	-	1.27	2.01	6.42	3.39	1.81	M5-P0.8	0.264	F04 (1.65)	NA	1.18	0.051	0.394	0.74	0.33
¾"	½"	0.56	3.07	13.10	1.42	2.17	6.42	3.54	1.95	M5-P0.8	0.264	F04 (1.65)	0.27	1.18	0.051	0.394	0.74	0.33
1"	¾"	0.81	3.72	13.25	1.74	2.57	7.28	3.83	2.39	M6-P1.0	0.343	F05 (1.97)	0.39	1.38	0.059	0.472	0.81	0.30
1¼"	1"	1.00	4.25	13.61	1.91	2.74	7.28	4.00	2.85	M6-P1.0	0.343	F05 (1.97)	0.37	1.38	0.059	0.472	0.81	0.30
1½"	1¼"	1.24	4.57	13.90	2.40	3.82	9.45	5.28	3.15	M8-P1.25	0.512	F07 (2.76)	0.47	2.17	0.059	0.709	1.41	0.48
2"	1½"	1.50	5.04	14.21	2.56	3.98	9.45	5.43	3.78	M8-P1.25	0.512	F07 (2.76)	0.47	2.17	0.059	0.709	1.41	0.48
2½"	2"	2.00	6.34	14.87	3.58	5.28	15.75	6.34	4.92	M10-P1.5	0.630	F10 (4.02)	0.76	-	-	0.886	1.92	0.65
3"	2½"	2.50	6.65	-	3.98	5.87	23.62	7.48	6.30	M10-P1.5	0.807	F10 (4.02)	0.77	-	-	1.024	1.93	0.65
4"	3"	3.25	8.43	-	4.59	6.50	23.62	8.07	7.99	M10-P1.5	0.807	F10 (4.02)	0.77	-	-	1.024	1.93	0.65

Note: The dimensions above are for informational purpose only. Please contact Sharpe® Valves if you need dimensions for construction.

ASME Class 800 & 300, 3-Piece Ball Valves

Sharpe® Series 80/89 & FS80/FS89

Technical Information

Valve Size		Flow Coeff. Cv	Approx. Weight (lbs.)
80/FS80	89/FS89		
½"	¼", ¾"	8	2
¾"	½"	12	2
1"	¾"	32	4
1¼"	1"	46	6
1½"	1¼"	80	9
2"	1½"	120	12
2½"	2"	240	27
3"	2½"	350	32
4"	3"	720	53

Applicable Standards

Body Wall Thickness	ASME B16.34
SW & Threaded Ends	ASME B16.11
Butt-Weld Ends	ASME B16.25
Basic Design	ASME B16.34, API 608 6th Ed
Fire Safe	API 607 6th Ed (FS versions only)
Pressure Test	API 598, MSS-SP 72
Mounting Dimensions	ISO 5211
NACE (Option A only)	MR-0175 / ISO 15156
Marking	MSS-SP 25
Fugitive Emission	API 641 1st edition (with body seal code I and stem packing code I) ISO 15848-1 (with I or N stem packing)

Note:
Viton® and Delrin® are registered trademarks of E.I. DuPont. 3M™ Dyneon™ TFM™ are trademarks owned by 3M.

254 SMO® is a registered trademarks of Avesta.

ASME Class 800 & 300, 3-Piece Ball Valves

Sharpe® Series 80/89 & FS80/FS89

How to order Series 80/89 & FS80/FS89

2"	FS80	–	6	6	6	6	R	G	G	–	SW/TE	–	X	–	OH
Size	Series		Body	Ends	Ball	Stem	Seat	Body Seal	Stem Packing		Ends		Service		Suffixes and Options

Size		
80/FS80	89/FS89	Class
-	¼"	800
-	⅜"	800
½"	½"	800
¾"	¾"	800
1"	1"	800
1¼"	1¼"	800
1½"	1½"	800
2"	2"	800
2½"	-	800
-	2½"	300
3"	3"	300
4"	-	300

Series (5)	
80	Standard Port
89	Full Port
FS80	Fire Safe (6)
FS89	Fire Safe (6)
CF80	Cavity Filler (7)
CF89	Cavity Filler (7)

Body Material	
4	Carbon Steel (WCB)
6	Stainless Steel (CF8M) ~ 316 SS
2	Alloy 20 (CN7M) *
S	254 SMO® *

End Material	
4	Carbon Steel
6	316 Stainless Steel (Welded ends will be type L)
2	Alloy 20 *
S	254 SMO®*

Ball Material	
6	316 Stainless Steel
2	Alloy 20 *
S	254 SMO®*

Stem Material	
6	316 Stainless Steel
7	17-4 PH
2	Alloy 20 *
S	254 SMO® *

Seat Material	
B	Super Nova
D	Delrin®
M	TFM®
N	Nova
P	Virgin PEEK
R	RTFE 15% Glass Filled
T	PTFE

Body Seal Material	
B	Buna
E	EDPM
G	Graphite
I	Impregnate Graphite
M	TFM®
T	PTFE
V	Viton®

Stem Packing	
G	Graphite
I	Impregnated Graphite
M	TFM®
N	Nova
T	PTFE

End Style	
TE	Threaded
SW	Socketweld
BW	Buttweld SCH 40
BW10	Buttweld SCH 10 *
FB	Flush Bottom Tank Pad

Additional Ends 89's Only	
BW80	Buttweld SCH 80
EBW	Buttweld SCH80 Extended

Service	
MN	Ammonia Service (1)(2)
SF	Silicone Free (1)(3)
U	Vacuum (1)(3)
X	Oxygen Service (1)(3)(4)

Note:

1 Per Sharpe Standard
2 80/89 or FS80/FS89
3 80/89 or CF80/CF89
4 No impregnated graphite

Suffixes & Options	
OH	Oval Handle up to 2" SP or 1½" FP
F1	1 Emission Port **
F2	2 Emission Port **
L	Lockable Stem Extension †
A	NACE
VB	Vented Ball
SJ	Oil Jacket with 2 Ports *
SJ3	Steam Jacket With 3 Ports *
TP	Tamper Proof Locking Device (Cast handles only)
DMH	Spring Return Handle ‡ *
HC	High Cycle Stem
PN4	Packing Nut Design 4" Only (Not API 608)

Note:

** ¾" and larger std port valves, ½" and larger full port valves.

† 3.25" Extension: ½"–1.25" standard port, ¼"–1 full port valves. 4" Extension: Larger valves.

‡ Contact Sharpe® Valves. 1" and smaller valves only.

Other materials/options available, please contact us with your requirement.

Note:

* POA .

5 **API 641 & API 608**
Sharpe Series 80, 89, FS80, & FS89 valves with body seal code I and stem packing code I passed API 641 1st edition [American Petroleum Institute – Fugitive Emissions Test], fulfilling qualification to API 608 6th edition.

6 **Fire Safe** FS80 (standard port) / FS89 (full port)
Use seat code B, M, N, R, or T.
Use body seal code G or I.
Use stem packing code G or I.

7 CF80/CF89 with **Cavity Filler Seats.**
Use seat code T.

asc-es.com

Building connections that last™

About ASC Engineered Solutions

ASC Engineered Solutions is defined by quality—in its products, services and support. With nearly 2,000 employees, the company's portfolio of precision-engineered piping support, valves and connections provides products to more than 4,000 customers across industries, such as mechanical, industrial, fire protection, oil and gas, and commercial and residential construction. Its portfolio of leading brands includes ABZ Valve®, AFCON®, Anvil®, Anvil EPS, Anvil Services, Basic-PSA, Beck®, Catawissa, Cooplet®, FlexHead®, FPPI®, Gruvlok®, J.B. Smith, Merit®, North Alabama Pipe, Quadrant®, SCI®, Sharpe®, SlideLOK®, SPF®, SprinkFLEX®, Trenton Pipe and VEP. With headquarters in Oak Brook, IL, ASC also has ISO 9001:2015 certified production facilities in PA, TN, IL, TX, AL, LA, KS, and RI.

Neither ASC Engineered Solutions nor any of its affiliated entities assumes responsibility for the selection, use, and maintenance of any product. Responsibility for the selection, use, and maintenance of any product remains solely with the purchaser and end user.

ASC Engineered Solutions reserves the right to modify or improve the designs or specifications of any product at any time without notice.

Authorized Distributor
MONILEK OILFIELD

MONILEK OILFIELD

E: sales@monilek.com
W: www.monilekgroup.com

asc-es.com

Building connections that last™

ASC® Engineered Solutions

FC-DS-SERIES-80-89-FS80-FS89-v04 20240325