parker.com/gsfe

PRODUCT CATALOGUE
COMPRESSED AIR AND GAS TREATMENT

GSFE Division

Parker

Authorized Distributor
MONILEK OILFIELD
MONILEK OILFIELD
E: sales@monilek.com
W: www.monilekgroup.com

GAS SEPARATION AND FILTRATION DIVISION EMEA

Parker Gas Separation and Filtration EMEA offer a range of filtration and separation solutions that are designed to meet the needs of global customers through a dedicated focus on key market sectors.

Operating from manufacturing sites in the UK, Italy, the Netherlands and the Czech Republic, the division designs, develops, manufactures and markets compressed air/gas filters and dryers, process chillers and coolers, condensate management products, breathing air purifiers, nitrogen, hydrogen and zero air on-site gas generators for many diverse markets, industries and applications where compressed air and gas purity, product quality, technological excellence and global customer support are paramount.

Parker Gas Separation and Filtration EMEA products and systems deliver a unique combination of innovation and excellence in the most demanding applications, helping engineers to maximise the productivity and profitability of their manufacturing and process operations and with a focus on delivering real and lasting value to every customer.

For over 50 years, Parker GSFE have remained instrumental in the development of both the international standards for compressed air and filter testing, and continue to work closely on new standards with governing bodies such as the British Compressed Air Society (BCAS), the International Standards Organisation (ISO), PNEUROP, and the USA Compressed Air and Gas Institute (CAGI).

Parker GSFE's goal is to dominate our chosen markets, aiming to be the number one choice supplier of compressed air / gas treatment products and on-site gas generators.

Achieving this, by recruiting the best teams, and by passionately developing our people, technology and products to help us exceed our customers' expectations, bringing new products, services and solutions to the market. We believe in, and strive to maintain, close relationships with our customers, making us their global partner of choice for compressed air and gas treatment products and services.

GSFE Compressed Air and Gas Treatment Manufacturing Locations

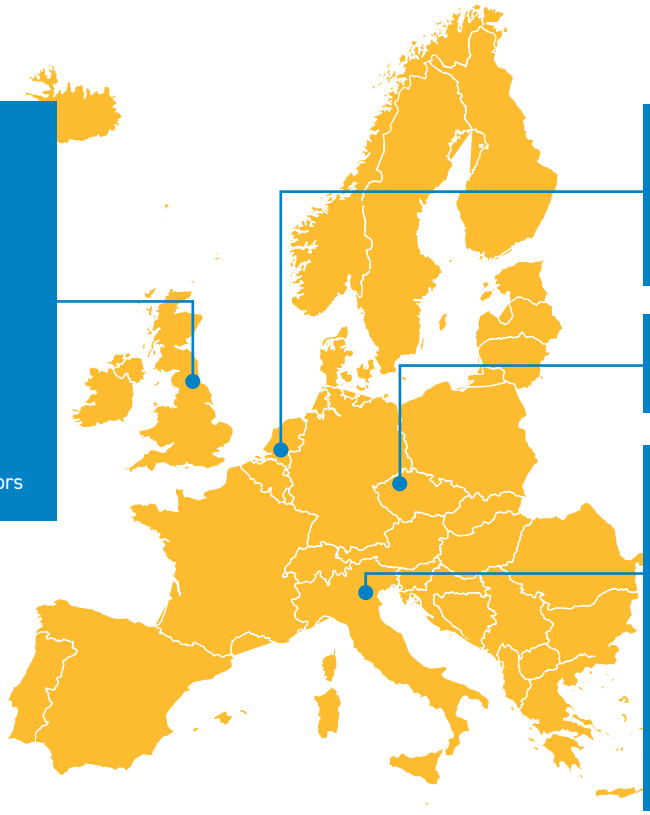

Gateshead, UK
GSFE Division Headquarters

CAGT Business Unit

- Filter Elements
- Compressed Air Filters
- Sterile Air/Gas Filters
- Adsorption Dryers
- Breathing Air Purifiers
- Carbon Dioxide Incident Protection

Gas Business Unit

- Industrial & Analytical Gas Generators

Etten Leur, The Netherlands

Membranes & Modules Business Unit

- Gas Membranes & Modules

Chomutov, Czech Republic

- Filter Elements

Padova, Italy

Refrigeration & Cooling Business Unit

- Adsorption Dryers
- Refrigeration Dryers
- Chillers
- Aftercoolers
- Filter Elements
- Compressed Air Filters
- Technical Gas Filters
- Condensate Drains

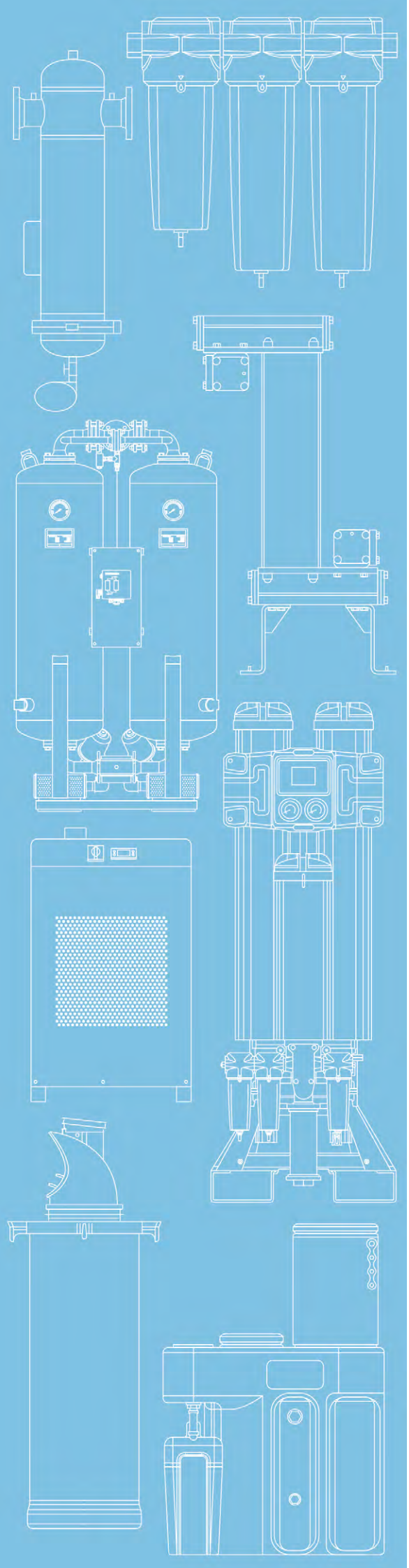

CONTENTS

COMPRESSED AIR FILTERS

- ISO Compressed Air Quality Standards 6
- Product Selection Criteria 8
- OIL-X Liquid Separators 10
- STH and SFH Liquid Separators 12
- OIL-X Coalescing Filters 14
- OIL-X Dry Particulate Filters 16
- OIL-X Carbon Steel, Coalescing, Dry Particulate and Oil Vapour Reduction Filters 20
- OIL-X Point Of Use Oil Vapour Reduction Filter 22
- OIL-X OVR Plant Scale Oil Vapour Reduction 24
- OIL-X Railway and Transportation Filters 26
- OEM Coalescing, Dry Particulate and Oil Vapour Reduction Filters 28
- OIL-X 0003G Micro Filter 30
- OIL-X Filter Accessories 31

MODULAR ALUMINIUM COMPRESSED AIR DRYERS

Adsorption

- K-MT Small Flow Heatless 32
- KA-MT Small Flow Heatless 34
- CDAS HL Medium Flow Heatless 36
- CDAS HL Large Flow Heatless 38
- CDAS LE Large Flow Low Energy Heatless 40
- OFAS HL Medium Flow Heatless 42
- OFAS HL Large Flow Heatless 44
- OFAS LE Large Flow Low Energy Heatless 46
- FBP HL Medium Flow Heatless 48
- FBP HL Large Flow Heatless 50
- FBP LE Large Flow Low Energy Heatless 52
- HVLAP Vacuum Pumps 54
- CDAS HL ATEX Pneumatic Medium Flow Heatless 56
- MX ATEX Pneumatic Large Flow Heatless 58
- Flow Control Devices (FCDs) - CDAS/OFAS/FBP Multi-banking 60

CARBON STEEL TWIN TOWER COMPRESSED AIR DRYERS

Adsorption

- K-MT Medium Flow Heatless 66
- KA-MT Medium Flow Heatless 68
- KE-MT Large Flow Heatless 70
- WVM Large Flow Vacuum Low Energy 72

FILTRATION AND SEPARATION

ADSORPTION

REFRIGERATION AND COOLING

CONTENTS

COMPRESSED AIR DRYERS

Hybrid

- ATT+ Green Hybrid Low Energy Dryers 74

Refrigeration

- SPS Direct Expansion 76
- PSE Direct Expansion 78

COMPRESSED AIR FILTERS AND DRYERS (20 BAR TO 350 BAR)

- G50-45 Bar Compressed Air Filter 80
- GH-350 Bar Compressed Air Filter 82
- HDK-25 Bar Compressed Air Dryer 84
- HDK-45 Bar Compressed Air Dryer 86
- HDK-MT-100 Bar Compressed Air Dryer 88
- HDK-MT-350 Bar Compressed Air Dryer 90

COMPRESSED BREATHING AIR PURIFICATION

- BSP-MT 1-4 92
- BAS HL 050-085 94
- BAM 10-70 96

CONDENSATE MANAGEMENT

Compressed Air Drains

- Product Selection 98
- HDF, EDE, and CDV Series 100

Oil/Water Separators

- Product Selection 102
- ES2000 Series 106
- ES2000 Series Maintenance Kits 107

INDUSTRIAL NITROGEN GAS GENERATORS

- Product Application Information 108
- NITROSource Compact 112
- NITROSource Plus 114

TECHNICAL GAS FILTRATION

- Product Application Information 118
- TGS and TGE Series 120
- Hydrogen Gas Filters 122

BIOENERGY

- Biogas Treatment Systems 124
- Hyperfilter BioEnergy 126
- Hypercool BioEnergy 126
- Hypersep BioEnergy 127
- Hyperdrain BioEnergy 127

CARBON DIOXIDE QUALITY INCIDENT PROTECTION

- Product Application Information 128
- PCO2 Quality Incident Protection Systems 130

THERMAL AND POWER MANAGEMENT

Aftercoolers

- Hypercool Water Cooled 132

Production Process Water Chillers

- Hyperchill Plus-E (50Hz) 134
- Hyperchill Plus-E (60Hz UL) 139
- Hyperchill Plus-E - Kits and Accessories 141
- Hyperchill Smart-E 142
- Hyperchill Smart-E- Kits and Accessories 145

REPLACEMENT FILTER ELEMENTS AND MAINTENANCE KITS FOR LEGACY PRODUCTS

Parker domnick hunter

- OIL-X EVOLUTION/OIL-Xplus Advantage 146
- PCO2 MK1 147
- SE and ES Oil/Water Separator 147

Parker Zander

- G, GL/GL Plus and LV Series 148

ADDITIONAL PRODUCTS FROM PARKER GSFE

Industrial Membrane Modules

Analytical Gas Systems

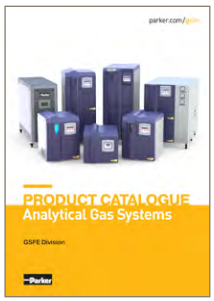

Click images for more information.

Specifying air quality (purity) in accordance with ISO8573-1:2010, the international standard for compressed air quality

ISO8573-1 is the primary document used from the ISO8573 series as it is this document which specifies the amount of contamination allowed in each cubic metre of compressed air.

ISO8573-1 lists the main contaminants as solid particulate, water and oil. The purity levels for each contaminant are shown separately in tabular form, however for ease of use, here all three contaminants are combined into one easy to use table.

ISO8573-1: 2010 CLASS	Solid Particulate				Water		Oil
	Maximum number of particulates per m³			Mass Concentration mg/m³	Vapour Pressure Dewpoint	Liquid g/m³	Total Oil (aerosol, liquid and vapour) mg/m³
	0.1 - 0.5 micron	0.5 - 1 micron	1 - 5 micron				
0	As specified by the equipment user or supplier and more stringent than Class 1						
1	⩽ 20,000	⩽ 400	⩽ 10	-	⩽ -70°C	-	0.01
2	⩽ 400,000	⩽ 6,000	⩽ 100	-	⩽ -40°C	-	0.1
3	-	⩽ 90,000	⩽ 1,000	-	⩽ -20°C	-	1
4	-	-	⩽ 10,000	-	⩽ +3°C	-	5
5	-	-	⩽ 100,000	-	⩽ +7°C	-	-
6	-	-	-	⩽ 5	⩽ +10°C	-	-
7	-	-	-	5-10	-	⩽ 0.5	-
8	-	-	-	-	-	0.5-5	-
9	-	-	-	-	-	5-10	-
X	-	-	-	> 10	-	> 10	> 10

Specifying air purity in accordance with ISO8573-1:2010

When specifying the purity of air required, the standard must always be referenced, followed by the purity class selected for each contaminant (a different purity class can be selected for each contaminant if required).

An example of how to write an air quality specification is shown below:

ISO8573-1:2010 Class 1:2:1

ISO8573-1:2010 refers to the standard document and its revision, the three digits refer to the purity classifications selected for solid particulate, water and total oil. Selecting an air purity class of 1:2:1 would specify the following air quality when operating at the standard's reference conditions:

Class 1 Particulate
In each cubic metre of compressed air, the particulate count should not exceed 20,000 particles in the 0.1 - 0.5 micron size range, 400 particles in the 0.5 - 1 micron size range and 10 particles in the 1 - 5 micron size range.

Class 2 Water
A pressure dewpoint (PDP) of -40°C or better is required and no liquid water is allowed.

Class 1 Oil
In each cubic metre of compressed air, not more than 0.01mg of oil is allowed. This is a total level for liquid oil, oil aerosol and oil vapour.

ISO8573-1:2010 Class 0

- Class 0 does not mean zero contamination.
- Class 0 does not mean oil-free compressed air.
- A Class 0 compressor does not guarantee oil-free compressed air.
- Class 0 does not solely refer to oil contamination.
- A Class 0 specification must be 'cleaner' than the Class 1 specification for the contaminant chosen.
- The contamination levels stated for a Class 0 specification must also be within the measurement capabilities of the test equipment and test methods shown in ISO8573 Pt 2 to Pt 9.
- The Class 0 specification must clearly state which contaminant the Class 0 claim refers to i.e. "Solid Particulate", "Water" or "Total Oil (aerosol, liquid and vapour)".
- Class 0 requires the user or the equipment supplier to show a contamination level as part of a written specification.
- **Example of a correctly written Class 0 specification**
  "When preceded by OIL-X Grade AO General Purpose and Grade AA High Efficiency Coalescing Filters, OIL-X OVR Grade Adsorption Filters provide a delivered air quality in accordance with ISO8573-1:2010 Class 0 (⩽0.003 mg/m³) for total oil (oil aerosol and oil vapour)".
- The agreed Class 0 specification must be written on all documentation to be in accordance with the standard.
- Stating Class 0 without an accompanying contaminant specification is meaningless and not in accordance with the standard.

Selecting Parker purification equipment to comply with ISO8573-1:2010 air quality standard

Simple guidelines for the selection of purification equipment

1. Purification equipment is installed to provide air quality, therefore you must first of all identify the quality of compressed air required for the compressed air leaving the compressor room and for each point of use on the compressed air system.

2. The air quality required at each point of use may differ dependent upon the application.

3. Using the quality classifications shown in ISO8573-1 will allow easy selection of purification equipment.

4. ISO8573-1:2010 is the latest edition of the standard, however some facilities may still be operating on older revisions.

5. Specifying air quality as ISO8573-1, ISO8573-1:1991 or ISO8573-1:2001 refers to the previous editions of the standard and may result in a different quality of delivered compressed air.

6. Ensure any ISO8573-1 air purity classifications are written in full and include the revision year to allow for correct product selection.

7. Remember - Oil-free compressor installations require the same filtration considerations as oil lubricated compressor installations.

ISO8573-1: 2010 CLASS	Solid Particulate		Water	Oil
	Wet Particulate	Dry Particulate	Vapour	Total Oil (aerosol, liquid and vapour)
0	-	-	-	OIL-X Grade AO + AA + OVR
1	OIL-X Grade AO + AA	OIL-X Grade AO (M) + AA (M)	Dryer sized for -70°C PDP	OIL-X Grade AO + AA + OVR OIL-X Grade AO + AA + ACS
2	OIL-X Grade AO	OIL-X Grade AO (M)	Dryer sized for -40°C PDP	OIL-X Grade AO + AA
3	OIL-X Grade AO	OIL-X Grade AO (M)	Dryer sized for -20°C PDP	OIL-X Grade AO
4	OIL-X Grade AO	OIL-X Grade AO (M)	Dryer sized for +3°C PDP	OIL-X Grade AO
5	OIL-X Grade AO	OIL-X Grade AO (M)	Dryer sized for +7°C PDP	-
6	-	-	Dryer sized for +10°C PDP	-

Further Information

Please refer to our white paper 'Introduction to ISO Compressed Air Quality Standards' for detailed information relating to ISO Compressed Air Quality Standards.

Available at parker.com/gsfe

Selecting the right purification products for your compressed air system

To achieve the degree of air quality specified by ISO8573-1, a careful approach to system design, commissioning and operation must be adopted.

Parker recommends that compressed air is treated:

- Prior to entry into the distribution system
- At critical usage points and applications

This ensures that contamination already in the distribution system is removed.

Purification equipment should be installed where the air is at the lowest possible temperature (i.e. downstream of after-coolers and air receivers). Point-of-use purification equipment should be installed as close as possible to the application.

In order to correctly size purification equipment, there are a number of primary operating parameters that must be obtained from the user's site. These are:

- **The MAXIMUM compressed air flow rate into the filters/dryer**
- **The MINIMUM operating pressure into the filters/dryer**
- **The MAXIMUM operating temperature into the filters/dryer**
- **The MAXIMUM ambient air temperature where the equipment is to be installed**
- **The required dewpoint (dryers)**

Individually, each of the primary operating parameters can influence product sizing however collectively they can have a major impact on product sizing and performance.

Typical Compressed Air Treatment System

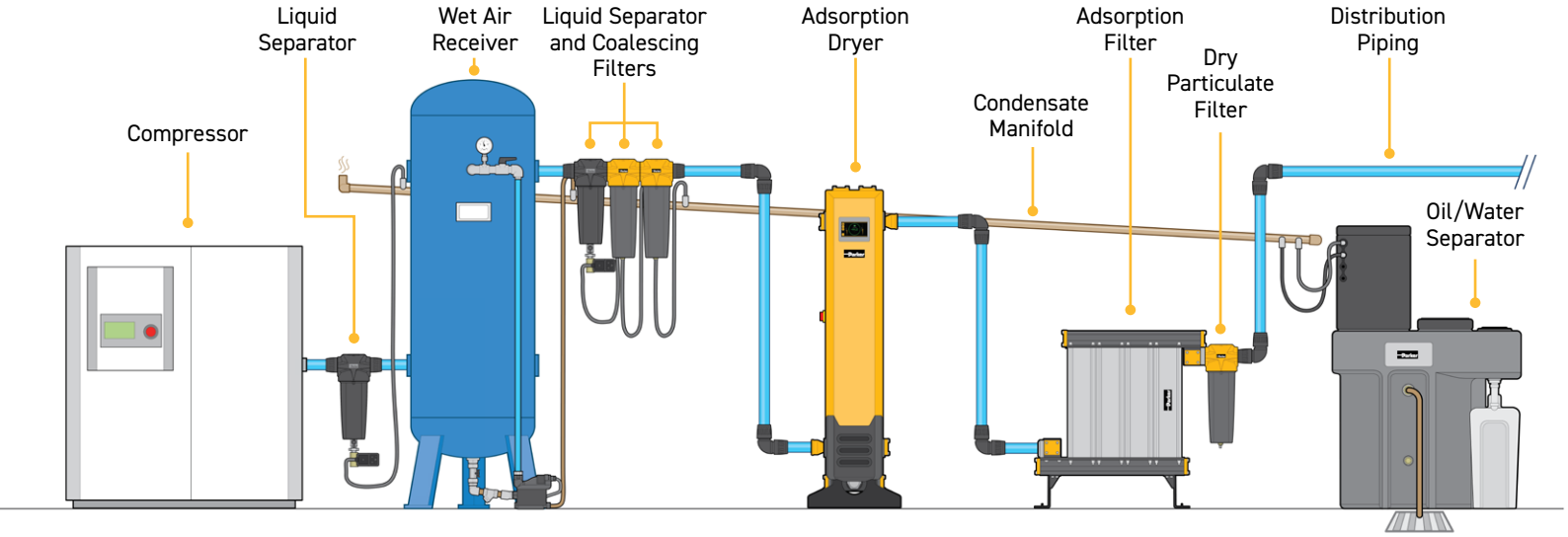

With the primary operating parameters, basic product selections can be made, however additional information may also be required to finalise product selection. Secondary parameters include:

- **Minimum operating temperature**
- **Preferred pipe connections**
- **Available electrical supply (voltage/phase/frequency)**
- **Customers preference regarding drains, controllers or other options**

Why is MAXIMUM Flow Rate Important?

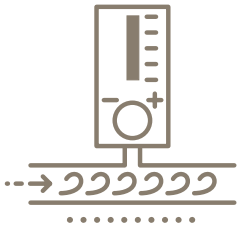

Filtration: As compressed air flow rates increase, contamination levels increase and a larger filtration surface area is required to ensure adequate filtration performance, low pressure drop and 12 month lifetime of filter elements.

Dryers: As compressed air flow rates increase, the amount of water vapour the dryer must remove also increases.

Adsorption dryers must be sized on the highest flow rate to ensure the desiccant bed is large enough to provide the correct contact time and dewpoint.

Refrigeration dryers must be sized to ensure the heat exchanger is large enough and has enough cooling capacity.

Why is MINIMUM Inlet Pressure Important?

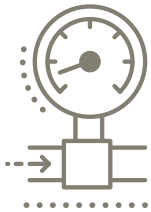

Dryers: As pressure decreases, the volume of compressed air increases, as does the water vapour content, therefore the amount of water vapour the dryer must remove also increases. Dryers must be sized for minimum inlet pressure to account for the increased amount of water vapour present.

Why is MAXIMUM Inlet Temperature Important?

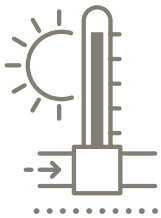

Dryers: As the temperature of the compressed air increases, so does the water vapour content, therefore the amount of water vapour the dryer must remove also increases. Dryers must be sized for maximum inlet temperature to account for the increased amount of water vapour present.

Why is MAXIMUM Ambient Temperature Important?

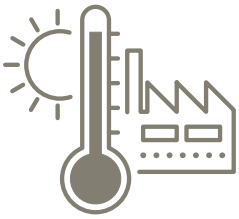

Refrigeration and Tandem Technology Dryers: Air cooled refrigeration and Tandem Technology dryers use ambient air for heat exchange.

The lower the ambient air temperature, the better the heat exchange process

Poor ventilation and/or high ambient air temperatures will result in loss of dewpoint.

Why Correct a Dryer for Dewpoint?

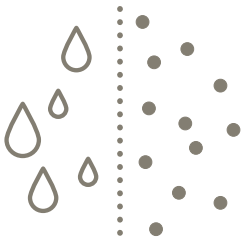

Adsorption Dryers: Dewpoint is derived from contact time between the air and the desiccant material, lower dewpoints typically require the dryer to be de-rated to provide more contact time.

Refrigeration Dryers: The size of the heat exchangers affects the cooling capacity, too little cooling capacity results in poor dewpoint.

Frequently Asked Questions: High/Low Temperatures

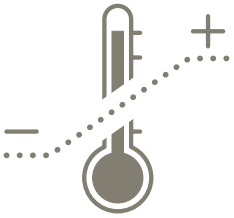

High Temperatures
Maximum temperature (inlet and ambient) for dryers is 50°C or 122°F. For temperatures above this it is more cost effective to install an after-cooler than oversize a dryer. Also as a dryer increases in size, so does the volume of purge required to regenerate the dryer. Fitting an after-cooler is also more cost effective in terms of energy consumption.

Low Temperatures
Freezing water causes damage to a dryer therefore as the temperature approaches freezing, the dryer and ancillaries need protection. Sub-zero temperatures also affect the function of seals and electronics.

- **Always keep purification equipment under shelter and out of cold wind/direct air blasts**
- **Trace heat and insulate anywhere that moisture is present**
  i.e. Inlet filtration/drain lines/inlet valves/columns/exhaust valves

OIL-X Liquid Separators

Filtration Performance

Filtration Grade	Filter Type	Particle Reduction (including water and oil aerosols)	Maximum Remaining Oil Content at 21°C (70°F)	Liquid Separation Efficiency	Change Element Every	Precede with Filtration Grade
WS	Liquid Separator	Not Applicable	Not Applicable	>93%	Not Applicable	Not Applicable

Technical Data

Filtration Grade	Liquid Separator Models	Minimum Operating Pressure		Maximum Operating Pressure		Minimum Operating Temperature		Maximum Operating Temperature	
		bar g	psi g	bar g	psi g	ºC	ºF	ºC	ºF
WS	PX010 - PX055 (Float Drain)	1.5	22	16	232	2	35	65	149
	PX010 - PX055 (Timed Solenoid Drain)	1.5	22	17	246.5	2	35	80	176

Flow Rates

Model	Pipe Size	L/S	m³/min	m³/hr	cfm	Initial Saturated Differential Pressure							
						100% Flow		75% Flow		50% Flow		25% Flow	
						mbar	psi	mbar	psi	mbar	psi	mbar	psi
WSPX010A G F X	¼"	10	0.6	36	21	53	0.8	29	0.4	14	0.2	4	0.1
WSXP010B G F X	⅜"	10	0.6	36	21	51	0.7	27	0.4	12	0.2	2	0.0
WSPX010C G F X	½"	10	0.6	36	21	48	0.7	25	0.4	10	0.1	0	0.0
WSPX015B G F X	⅜"	40	2.4	144	85	64	0.9	25	0.4	12	0.2	6	0.1
WSPX015C G F X	½"	40	2.4	144	85	55	0.8	22	0.3	10	0.1	4	0.1
WSPX020D G F X	¾"	40	2.4	144	85	42	0.6	22	0.3	7	0.1	2	0.0
WSPX025D G F X	¾"	110	6.6	396	233	98	1.4	55	0.8	23	0.3	4	0.1
WSPX025E G F X	1"	110	6.6	396	233	95	1.4	52	0.8	20	0.3	1	0.0
WSPX030G G F X	1½"	110	6.6	396	233	82	1.2	30	0.4	13	0.2	4	0.1
WSPX035G G H X	1½"	350	21	1260	742	57	0.8	24	0.3	5	0.1	5	0.1
WSPX040H G H X	2"	350	21	1260	742	52	0.8	19	0.3	0	0.0	0	0.0
WSPX045I G H X	2½"	350	21	1260	742	55	0.8	22	0.3	3	0.0	1	0.0
WSPX050I G H X	2½"	800	48	2880	1695	116	1.7	57	0.8	16	0.2	5	0.1
WSPX055J G H X	3"	800	48	2880	1695	111	1.6	52	0.8	11	0.2	0	0.0

Stated flows are for operation at 7 bar (g) (102 psi g) with reference to 20°C, 1 bar (a), 0% relative water vapour pressure. For flows at other conditions, apply the correction factors shown below.

Part Selection Options

Pipe Size: G for BSPP Threads / N for NPT Threads.

Condensate Drain: Float Drain - For models 010-030 F and for models 035-055 H
Timed Solenoid Drain - For 230V 50/60Hz T1 or for 115V 50/60Hz T2
See next page for further information.

Product Selection & Correction Factors

To correctly select a separator model, the flow rate of the separator must be adjusted for the minimum operating (inlet) pressure at the point of installation.

1. Obtain the minimum operating (inlet) pressure and maximum compressed air flow rate at the inlet of the separator.
2. Select the correction factor for minimum inlet pressure from the CFMIP table (always round down e.g. for 5.3 bar, use 5 bar correction factor)
3. Calculate the minimum filtration capacity. Minimum Filtration Capacity = Compressed Air Flow Rate x CFP
4. Using the minimum filtration capacity, select a filter model from the flow rate tables above (filter selected must have a flow rate equal to or greater than the minimum filtration capacity).

CFMIP - Correction Factor Minimum Inlet Pressure

Minimum Inlet Pressure	bar g	1	2	3	4	5	6	7	8	9	10	11	12	13	14	15	16
	psi g	15	29	44	58	73	87	100	116	131	145	160	174	189	203	218	232
Correction Factor		4.00	2.63	2.00	1.59	1.33	1.14	1.00	0.94	0.89	0.85	0.82	0.79	0.76	0.73	0.71	0.68

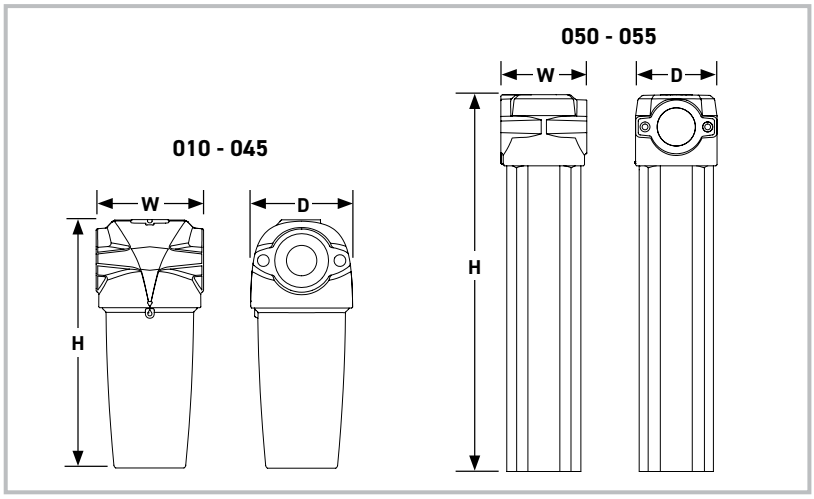

Weights & Dimensions

WSPX Model	Height (H)		Width (W)		Depth (D)		Weight	
	mm	ins	mm	ins	mm	ins	kg	lbs
010	180	7.09	76	2.99	65	2. 56	0.81	1.78
015/020	238	9.37	89	3.50	84	3.31	1.41	3.10
025	277	10.91	120	4.72	115	4.53	2.66	5.86
030	277	10.91	120	4.72	115	4.53	2.66	5.86
035/040/ 045	440	17.32	164	6.46	157	6.18	6.87	15.14
050	614	24.17	192	7.56	183	7.20	8.47	18.66
055	515	20.28	192	7.56	183	7.20	8.47	18.66

Condensate Drain Selection

OIL-X WS liquid separators are available with three condensate drain options, timed solenoid 230V 50/60Hz (T1), timed solenoid 115V 50/60Hz (T2) and float (F or H depending on separator model).

Liquid separator drains must be sized and selected based upon the volume of condensate at the point of WS installation. If in doubt, use T1 or T2 variant.

Options

Drain Type	Model	Electrical Supply	Part Code Reference	Connections		Maximum Operating Pressure	
				Inlet	Outlet	bar g	psi g
Float	010 to 030	N/A	F	N/A	⅛"	16	232
	035 to 055		H	½"	½"	16	232
Timed Solenoid	010 to 055	230V 1ph 50/60Hz	T1	½"	⅜"	17.25	250
		115V 1ph 50/60Hz	T2	½"	⅜"	17.25	250

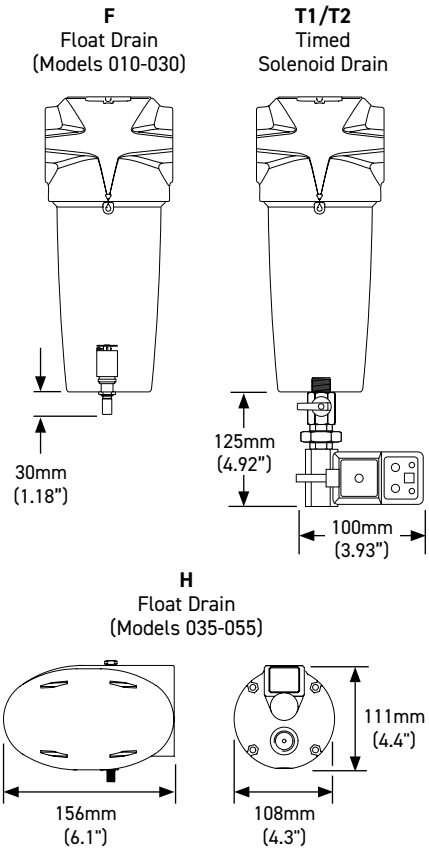

Part Number Configuration

Filtration Grade	Model	Pipe Size	Connection Type	Drain Option	Incident Monitor
WS	PX and 3-digit code denotes filter housing size	Letter denotes pipe size ¼" to 3"	G = BSPP N = NPT	F = Float Drain (Models 010 to 030) H = Float Drain (Models 035 to 055) T1 = Timed Solenoid (230V 1ph 50/60Hz) T2 = Timed Solenoid (115V 1ph 50/60Hz)	X = None
	010 to 055	A to J			

Examples

WS	PX010	A	G	T1	X
WS	PX040	H	G	T2	X
WS	PX045	I	N	H	X

STH & SFH Liquid Separators

Technical Data

Filtration Grade	Liquid Separator Models	Minimum Operating Pressure		Maximum Operating Pressure		Minimum Operating Temperature		Maximum Operating Temperature	
		bar g	psi g	bar g	psi g	°C	°F	°C	°F
STH-N	STH001N - STH046N	1	15	16	232	1	33	65	149
SFH-N	SFH029N - SFH550N	1	15	16	232	2	35	60	140
STHA-C	STH003A-C - STH013A-C	1	15	16	232	-20	-4	65	149

Flow Rates

Threaded - Die Cast Aluminium

Model	Pipe Size		L/S	m³/min	m³/hr	cfm
	Inlet	Outlet				
STH001	⅜"	⅜"	15	0.9	54	32
STH002	½"	½"	35	2.1	126	74
STH003	¾"	¾"	50	3	180	106
STH006	1"	1"	92	5.5	330	194
STH009	1¼"	1¼"	150	9	540	318
STH013	1½"	1½"	208	12.5	750	441
STH021	2"	2"	350	21	1260	742
STH040	2½"	2½"	667	40	2400	1413
STH046	3"	3"	767	46	2760	1624

Coding Example

STH013N

Stainless Steel

Model	Pipe Size		L/S	m³/min	m³/hr	cfm
	Inlet	Outlet				
STH003A-C	Clamp ISO 1127-1 DN25		50	3	180	106
STH013A-C	Clamp ISO 1127-1 DN40		208	12.5	750	441

Coding Example

STH003A-C

Flanged - Fabricated Carbon Steel

Model	Pipe Size		L/S	m³/min	m³/hr	cfm
	Inlet	Outlet				
SFH029	DN100	DN80	490	29.4	1764	1038
SFH030	DN100	DN80	500	30.0	1800	1059
SFH037	DN100	DN100	610	36.6	2196	1293
SFH038	DN125	DN100	633	38.0	2280	1342
SFH066	DN125	DN125	1093	65.6	3936	2317
SFH067	DN150	DN125	1117	67.0	4020	2366
SFH088	DN150	DN150	1473	88.4	5304	3122
SFH089	DN200	DN150	1483	89.0	5340	3143
SFH097	DN200	DN200	1618	97.1	5826	3429
SFH142	DN250	DN200	2365	141.9	8514	5011
SFH180	DN300	DN200	2992	179.5	10770	6339
SFH209	DN350	DN200	3485	209.1	12546	7385
SFH280	DN350	DN200	4667	280	16800	9888
SFH390	DN450	DN250	6500	390	23400	13773
SFH450	DN500	DN300	7500	450	27000	15892
SFH550	DN600	DN300	9167	550	33000	19423

Coding Example

SFH067N

Stated flows are for operation at 7 bar (g) (102 psi g) with reference to 20°C, 1 bar (a), 0% relative water vapour pressure.

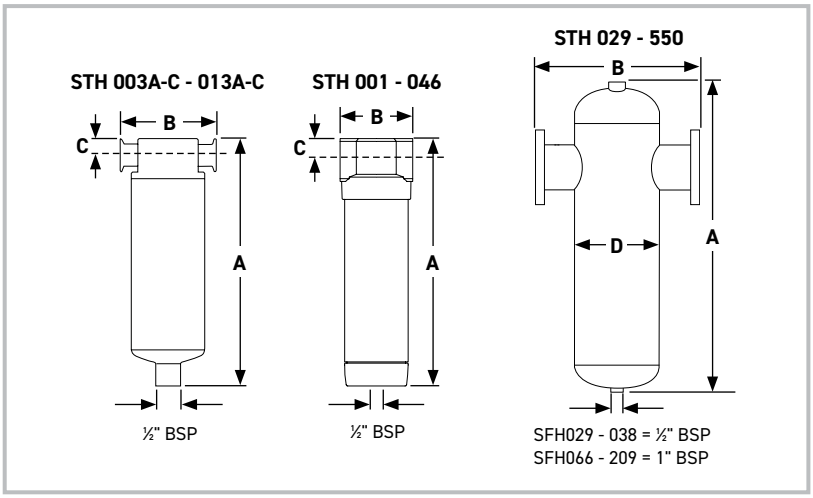

Weights & Dimensions

Model	Dimensions								Weight	
	A		B		C		D		kg	lbs
	mm	ins	mm	ins	mm	ins	mm	ins		
Threaded - Die Cast Aluminium										
STH001N	267	10.5	89	3.5	24	0.9	-	-	1.1	2.42
STH002N	267	10.5	89	3.5	24	0.9	-	-	1.1	2.42
STH003N	267	10.5	89	3.5	24	0.9	-	-	1.1	2.42
STH006N	367	14.4	109	4.3	34	1.3	-	-	2.2	4.84
STH009N	367	14.4	109	4.3	34	1.3	-	-	2.2	4.84
STH013N	367	14.4	109	4.3	34	1.3	-	-	2.2	4.84
STH021N	550	21.6	150	4.9	41	1.6	-	-	4.3	9.47
STH040N	733	28.8	188	7.4	56	2.2	-	-	12.5	27.55
STH046N	733	28.8	188	7.4	56	2.2	-	-	12.5	27.55
Clamp Connection - Stainless Steel										
STH003A-C	149	5.9	470	18.5	26	1.0	-	-	5.3	11.7
STH013A-C	185	7.3	467	18.4	32	1.3	-	-	8.2	18.0
Flanged - Fabricated Carbon Steel										
SFH029	400	15.7	720	28.3	-	-	200	7.9	28	61.7
SFH030	720	28.3	400	15.7	-	-	193.7	7.6	29	64
SFH037	880	34.6	460	18.1	-	-	244.5	9.6	48	106
SFH038	880	34.6	460	18.1	-	-	244.5	9.6	49	108
SFH066	980	38.6	550	21.7	-	-	273	10.7	55	121
SFH067	980	38.6	550	21.7	-	-	273	10.7	56	123
SFH088	1060	41.7	570	22.4	-	-	323.9	12.7	82	180
SFH089	1060	41.7	570	22.4	-	-	323.9	12.7	85	187
SFH097	1160	45.7	660	26.0	-	-	323.9	12.7	126	277
SFH142	1255	49.4	680	26.8	-	-	406	15.9	148	326
SFH180	1455	57.3	750	29.5	-	-	470	18.5	160	352
SFH209	1655	65.2	830	32.7	-	-	519	20.4	205	451
SFH280	1745	68.7	1000	39.3	-	-	630	24.8	240	529
SFH390	2154	84.8	1200	47.2	-	-	720	28.3	400	882
SFH450	2355	92.7	1933	76.1	-	-	850	33.4	600	1323
SFH550	2835	111.6	2088	82.2	-	-	1000	39.3	840	1852

Grade AO General Purpose Coalescing Filter

Filtration Performance

Filtration Grade	Filter Type	Particle Reduction (including water and oil aerosols)	Maximim Remaining Oil Content at 21°C (70°F)	Filtration Efficiency	Change Element Every	Precede with Filtration Grade
AO	Coalescing	Down to 1 micron	0.5 mg/m³ 0.5 ppm(w)	99.925%	12 months	WS (for bulk liquid)

Technical Data

Filtration Grade	Filter Models	Minimum Operating Pressure		Maximum Operating Pressure		Minimum Operating Temperature		Maximum Operating Temperature	
		bar g	psi g	bar g	psi g	°C	°F	°C	°F
AO	PX010 - PX055 (Float Drain)	1.5	22	16	232	2	35	65	149

Flow Rates

Model	Pipe Size	L/S	m³/min	m³/hr	cfm	Replacement Element	No.
AOPX010A G FX	¼"	10	0.6	36	21	P010AO	1
AOPX010B G FX	⅜"	10	0.6	36	21	P010AO	1
AOPX010C G FX	½"	10	0.6	36	21	P010AO	1
AOPX015B G FX	⅜"	20	1.2	72	42	P015AO	1
AOPX015C G FX	½"	20	1.2	72	42	P015AO	1
AOPX020C G FX	½"	30	1.8	108	64	P020AO	1
AOPX020D G FX	¾"	30	1.8	108	64	P020AO	1
AOPX025D G FX	¾"	60	3.6	216	127	P025AO	1
AOPX025E G FX	1"	60	3.6	216	127	P025AO	1
AOPX030E G FX	1"	110	6.6	396	233	P030AO	1
AOPX030G G FX	1½"	110	6.6	396	233	P030AO	1
AOPX035G G FX	1½"	160	9.6	576	339	P035AO	1
AOPX040H G FX	2"	220	13.2	792	466	P040AO	1
AOPX045H G FX	2"	330	19.8	1188	699	P045AO	1
AOPX045I G FX	2½"	330	19.8	1188	699	P045AO	1
AOPX050I G FX	2½"	430	25.9	1548	911	P050AO	1
AOPX055I G FX	2½"	620	37.3	2232	1314	P055AO	1
AOPX055J G FX	3"	620	37.3	2232	1314	P055AO	1

Filter Coding Example - Grades AO/AA

Grade	Model	Pipe Size	Thread	Drain Option	Incident Monitor Option
AO AA	3 digit code denotes filter housing size	Letter denotes pipe size	G = BSPP N = NPT	F = Float	X = None
Example code					
AO	030	G	G	F	X

Stated flows are for operation at 7 bar (g) (102 psi g) with reference to 20°C, 1 bar (a), 0% relative water vapour pressure. For flows at other conditions, apply the correction factors shown below.

Select G for BSPP Threads/Select N for NPT Threads

When selecting a coalescing filter for pressures above 16 bar g (232 psi g), use manual drain version and fit an external automatic drain.

Product Selection & Correction Factors

To correctly select a filter model, the flow rate of the filter must be adjusted for the minimum operating (inlet) pressure at the point of installation.

1. Obtain the minimum operating (inlet) pressure and maximum compressed air flow rate at the inlet of the filter.
2. Select the correction factor for minimum inlet pressure from the CFMIP table (always round down e.g. for 5.3 bar, use 5 bar correction factor).
3. Calculate the minimum filtration capacity. Minimum Filtration Capacity = Compressed Air Flow Rate x CFMIP.
4. Using the minimum filtration capacity, select a filter model from the flow rate tables above (filter selected must have a flow rate equal to or greater than the minimum filtration capacity).

CFMIP - Correction Factor Minimum Inlet Pressure

Minimum Inlet Pressure	bar g	1	2	3	4	5	6	7	8	9	10	11	12	13	14	15	16	17	18	19	20
	psi g	15	29	44	58	73	87	100	116	131	145	160	174	189	203	218	232	248	263	277	290
Correction Factor		2.65	1.87	1.53	1.32	1.18	1.08	1.00	0.94	0.88	0.84	0.80	0.76	0.73	0.71	0.68	0.66	0.64	0.62	0.61	0.59

Grade AA High Efficiency Coalescing Filter

Filtration Performance

Filtration Grade	Filter Type	Particle Reduction (inc water & oil aerosols)	Maximum Remaining Oil Content at 21°C (70°F)	Filtration Efficiency	Change Element Every	Precede with Filtration Grade
AA	Coalescing	Down to 0.01 micron	0.01 mg/m³ 0.01 ppm(w)	99.9999%	12 months	AO

Technical Data

Filtration Grade	Filter Models	Minimum Operating Pressure		Maximum Operating Pressure		Minimum Operating Temperature		Maximum Operating Temperature	
		bar g	psi g	bar g	psi g	°C	°F	°C	°F
AA	PX010 - PX055 (Float Drain)	1.5	22	16	232	2	35	65	149

Flow Rates

Model	Pipe Size	L/S	m³/min	m³/hr	cfm	Replacement Element	No.	AO + AA Saturated Differential Pressure							
								100% Flow		80% Flow		60% Flow		40% Flow	
								mbar	psi	mbar	psi	mbar	psi	mbar	psi
AAPX010A G FX	¼"	10	0.6	36	21	P010AA	1	162	2.3	114	1.7	80	1.2	57	0.8
AAPX010B G FX	⅜"	10	0.6	36	21	P010AA	1	168	2.4	105	1.5	78	1.1	43	0.6
AAPX010C G FX	½"	10	0.6	36	21	P010AA	1	165	2.4	103	1.5	69	1.0	47	0.7
AAPX015B G FX	⅜"	20	1.2	72	42	P015AA	1	162	2.3	134	1.9	81	1.2	46	0.7
AAPX015C G FX	½"	20	1.2	72	42	P015AA	1	162	2.3	134	1.9	81	1.2	46	0.7
AAPX020C G FX	½"	30	1.8	108	64	P020AA	1	156	2.3	132	1.9	92	1.3	55	0.8
AAPX020D G FX	¾"	30	1.8	108	64	P020AA	1	156	2.3	132	1.9	92	1.3	55	0.8
AAPX025D G FX	¾"	60	3.6	216	127	P025AA	1	139	2.0	101	1.5	64	0.9	26	0.4
AAPX025E G FX	1"	60	3.6	216	127	P025AA	1	139	2.0	101	1.5	64	0.9	26	0.4
AAPX030E G FX	1"	110	6.6	396	233	P030AA	1	167	2.4	120	1.7	60	0.9	30	0.4
AAPX030G G FX	1½"	110	6.6	396	233	P030AA	1	167	2.4	120	1.7	60	0.9	30	0.4
AAPX035G G FX	1½"	160	9.6	576	339	P035AA	1	120	1.7	84	1.2	50	0.7	19	0.3
AAPX040H G FX	2"	220	13.2	792	466	P040AA	1	117	1.7	82	1.2	64	0.9	37	0.5
AAPX045H G FX	2"	330	19.8	1188	699	P045AA	1	166	2.4	101	1.5	72	1.0	31	0.4
AAPX045I G FX	2½"	330	19.8	1188	699	P045AA	1	166	2.4	101	1.5	72	1.0	31	0.4
AAPX050I G FX	2½"	430	25.9	1548	911	P050AA	1	120	1.7	91	1.3	61	0.9	28	0.4
AAPX055I G FX	2½"	620	37.3	2232	1314	P055AA	1	151	2.2	104	1.5	80	1.2	43	0.6
AAPX055J G FX	3"	620	37.3	2232	1314	P055AA	1	151	2.2	104	1.5	80	1.2	43	0.6

Stated flows are for operation at 7 bar (g) (102 psi g) with reference to 20°C, 1 bar (a), 0% relative water vapour pressure. For flows at other conditions, apply the correction factors on previous page.

Select G for BSPP Threads/Select N for NPT Threads

When selecting a coalescing filter for pressures above 16 bar g (232 psi g), use manual drain version and fit an external automatic drain.

Filtration Tested In Accordance With

Filtration Grade	AO with float drain	AA with float drain
Filter Type	Coalescing	Coalescing
Test Methods Used	ISO12500-1 ISO 8573-2 ISO 8573-4	ISO12500-1 ISO 8573-2 ISO 8573-4
ISO12500-1 Inlet Challenge Concentration	40 mg of oil aerosol per cubic metre of compressed air	10 mg of oil aerosol per cubic metre of compressed air

OIL-X Grade AO & AA Oil Carryover versus Flow

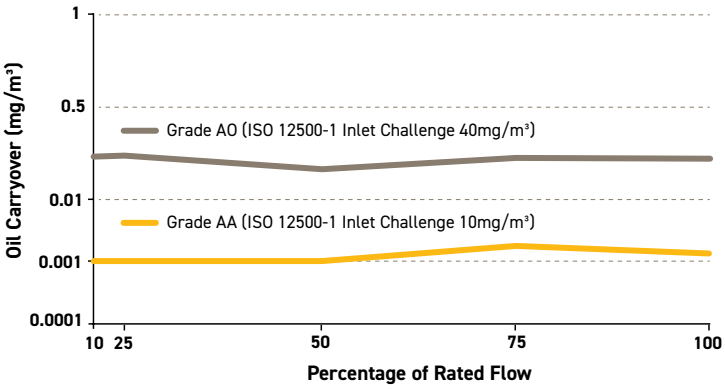

Grade AO General Purpose Dry Particulate Filter

Filtration Performance

Filtration Grade	Filter Type	Particle Reduction (including water and oil aerosols)	Maximum Remaining Oil Content at 21°C (70°F)	Filtration Efficiency	Change Element Every	Precede with Filtration Grade
AO	Dry Particulate	Down to 1 micron	Not Applicable	99.925%	12 months	Not Applicable

Technical Data

Filtration Grade	Filter Models	Minimum Operating Pressure		Maximum Operating Pressure		Minimum Operating Temperature		Maximum Operating Temperature	
		bar g	psi g	bar g	psi g	°C	°F	°C	°F
AO	PX010 - PX055 (Manual Drain)	1	15	20	290	2	35	80	176

Flow Rates

Model	Pipe Size	L/S	m³/min	m³/hr	cfm	Replacement Element	No.
AOPX010A G MX	¼"	10	0.6	36	21	P010AO	1
AOPX010B G MX	⅜"	10	0.6	36	21	P010AO	1
AOPX010C G MX	½"	10	0.6	36	21	P010AO	1
AOPX015B G MX	⅜"	20	1.2	72	42	P015AO	1
AOPX015C G MX	½"	20	1.2	72	42	P015AO	1
AOPX020C G MX	½"	30	1.8	108	64	P020AO	1
AOPX020D G MX	¾"	30	1.8	108	64	P020AO	1
AOPX025D G MX	¾"	60	3.6	216	127	P025AO	1
AOPX025E G MX	1"	60	3.6	216	127	P025AO	1
AOPX030E G MX	1"	110	6.6	396	233	P030AO	1
AOPX030G G MX	1½"	110	6.6	396	233	P030AO	1
AOPX035G G MX	1½"	160	9.6	576	339	P035AO	1
AOPX040H G MX	2"	220	13.2	792	466	P040AO	1
AOPX045H G MX	2"	330	19.8	1188	699	P045AO	1
AOPX045I G MX	2½"	330	19.8	1188	699	P045AO	1
AOPX050I G MX	2½"	430	25.9	1548	911	P050AO	1
AOPX055I G MX	2½"	620	37.3	2232	1314	P055AO	1
AOPX055J G MX	3"	620	37.3	2232	1314	P055AO	1

Filter Coding Example - Grades AO/AA

Grade	Model	Pipe Size	Thread	Drain Option	Incident Monitor Option
AO AA	3 digit code denotes filter housing size	Letter denotes pipe size	G = BSPP N = NPT	M = Manual	X = None
Example code					
AO	030	G	G	M	X

Stated flows are for operation at 7 bar (g) (102 psi g) with reference to 20°C, 1 bar (a), 0% relative water vapour pressure. For flows at other conditions, apply the correction factors shown below.

Select G for BSPP Threads/Select N for NPT Threads

Product Selection & Correction Factors

To correctly select a filter model, the flow rate of the filter must be adjusted for the minimum operating (inlet) pressure at the point of installation.

1. Obtain the minimum operating (inlet) pressure and maximum compressed air flow rate at the inlet of the filter.
2. Select the correction factor for minimum inlet pressure from the CFMIP table (always round down e.g. for 5.3 bar, use 5 bar correction factor).
3. Calculate the minimum filtration capacity. Minimum Filtration Capacity = Compressed Air Flow Rate x CFMIP.
4. Using the minimum filtration capacity, select a filter model from the flow rate tables above (filter selected must have a flow rate equal to or greater than the minimum filtration capacity).

CFMIP - Correction Factor Minimum Inlet Pressure

Minimum Inlet Pressure	bar g	1	2	3	4	5	6	7	8	9	10	11	12	13	14	15	16	17	18	19	20
	psi g	15	29	44	58	73	87	100	116	131	145	160	174	189	203	218	232	248	263	277	290
Correction Factor		2.65	1.87	1.53	1.32	1.18	1.08	1.00	0.94	0.88	0.84	0.80	0.76	0.73	0.71	0.68	0.66	0.64	0.62	0.61	0.59

Grade AA High Efficiency Dry Particulate Filter

Filtration Performance

Filtration Grade	Filter Type	Particle Reduction (inc water & oil aerosols)	Maximum Remaining Oil Content at 21°C (70°F)	Filtration Efficiency	Change Element Every	Precede with Filtration Grade
AA	Not Applicable	Down to 0.01 micron	Not Applicable	99.9999%	12 months	AO Dry Particulate

Technical Data

Filtration Grade	Filter Models	Minimum Operating Pressure		Maximum Operating Pressure		Minimum Operating Temperature		Maximum Operating Temperature	
		bar g	psi g	bar g	psi g	°C	°F	°C	°F
AA	PX010 - PX055 (Manual Drain)	1	15	20	290	2	35	80	176

Flow Rates

Model	Pipe Size	L/S	m³/min	m³/hr	cfm	Replacement Element	No.	AO + AA Initial Dry Differential Pressure							
								100% Flow		80% Flow		60% Flow		40% Flow	
								mbar	psi	mbar	psi	mbar	psi	mbar	psi
AAPX010A G MX	¼"	10	0.6	36	21	P010AA	1	103	1.5	64	0.9	51	0.7	36	0.5
AAPX010B G MX	⅜"	10	0.6	36	21	P010AA	1	105	1.5	57	0.8	42	0.6	28	0.4
AAPX010C G MX	½"	10	0.6	36	21	P010AA	1	107	1.6	53	0.8	35	0.5	27	0.4
AAPX015B G MX	⅜"	20	1.2	72	42	P015AA	1	121	1.8	78	1.1	34	0.5	18	0.3
AAPX015C G MX	½"	20	1.2	72	42	P015AA	1	121	1.8	78	1.1	34	0.5	18	0.3
AAPX020C G MX	½"	30	1.8	108	64	P020AA	1	105	1.5	78	1.1	48	0.7	24	0.3
AAPX020D G MX	¾"	30	1.8	108	64	P020AA	1	105	1.5	78	1.1	48	0.7	24	0.3
AAPX025D G MX	¾"	60	3.6	216	127	P025AA	1	85	1.2	57	0.8	35	0.5	16	0.2
AAPX025E G MX	1"	60	3.6	216	127	P025AA	1	85	1.2	57	0.8	35	0.5	16	0.2
AAPX030E G MX	1"	110	6.6	396	233	P030AA	1	114	1.7	80	1.2	47	0.7	22	0.3
AAPX030G G MX	1½"	110	6.6	396	233	P030AA	1	114	1.7	80	1.2	47	0.7	22	0.3
AAPX035G G MX	1½"	160	9.6	576	339	P035AA	1	120	1.7	84	1.2	50	0.7	19	0.3
AAPX040H G MX	2"	220	13.2	792	466	P040AA	1	59	0.9	40	0.6	28	0.4	16	0.2
AAPX045H G MX	2"	330	19.8	1188	699	P045AA	1	112	1.6	74	1.1	44	0.6	22	0.3
AAPX045I G MX	2½"	330	19.8	1188	699	P045AA	1	112	1.6	74	1.1	44	0.6	22	0.3
AAPX050I G MX	2½"	430	25.9	1548	911	P050AA	1	70	1.0	51	0.7	30	0.4	17	0.2
AAPX055I G MX	2½"	620	37.3	2232	1314	P055AA	1	91	1.3	62	0.9	41	0.6	21	0.3
AAPX055J G MX	3"	620	37.3	2232	1314	P055AA	1	91	1.3	62	0.9	41	0.6	21	0.3

Stated flows are for operation at 7 bar (g) (102 psi g) with reference to 20°C, 1 bar (a), 0% relative water vapour pressure. For flows at other conditions, apply the correction factors on previous page.

Select G for BSPP Threads/Select N for NPT Threads

Filtration Tested In Accordance With

Filtration Grade	AO with manual drain	AA with manual drain
Filter Type	Dry Particulate	Dry Particulate
Test Methods Used	ISO 8573-4	ISO 8573-4
ISO12500-1 Inlet Challenge Concentration	Not Applicable	Not Applicable

Multi-box Replacement Filter Elements

OIL-X Housing	Multi-Box Part Number		Box Quantity
	Grade AO	Grade AA	
PX010 & P010	P010AOX25	P010AAX25	25
PX015 & P015	P015AOX25	P015AAX25	25
PX020 & P020	P020AOX25	P020AAX25	25
PX025 & P025	P025AOX12	P025AAX12	12
PX030 & P030	P030AOX12	P030AAX12	12
PX035 & P035	P035AOX15	P035AAX15	15
PX040 & P040	P040AOX15	P040AAX15	15
PX045 & P045	P045AOX15	P045AAX15	15

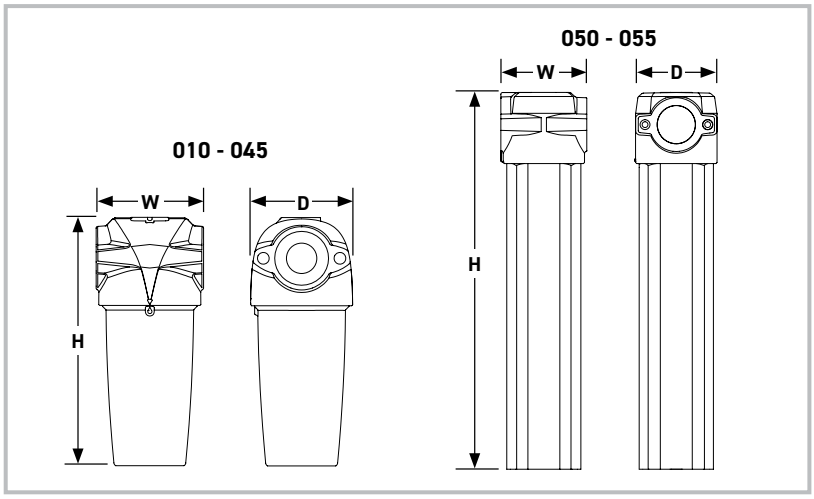

Weight & Dimensions

Model	Height (H)		Width (W)		Depth (D)		Weight	
	mm	ins	mm	ins	mm	ins	kg	lbs
PX010	180	7.09	76	2.99	65	2. 56	0.81	1.78
PX015	238	9.37	89	3.50	84	3.31	1.41	3.10
PX020	238	9.37	89	3.50	84	3.31	1.41	3.10
PX025	277	10.91	120	4.72	115	4.53	2.66	5.86
PX030	367	14.45	120	4.72	115	4.53	3.01	6.63
PX035	440	17.32	164	6.46	157	6.18	6.87	15.14
PX040	532	20.94	164	6.46	157	6.18	7.18	15.82
PX045	532	20.94	164	6.46	157	6.18	7.18	15.82
PX050	654	25.75	192	7.56	183	7.20	10.18	22.43
PX055	844	33.23	192	7.56	183	7.20	15.78	34.78

Parker Catalogue Numbers (BSPP Models)

Model	General Purpose Coalescing Filters	General Purpose Dry Particulate Filters	High Efficiency Coalescing Filters	High Efficiency Dry Particulate Filters
PX010A	AOPX010AGFX	AOPX010AGMX	AAPX010AGFX	AAPX010AGMX
PX010B	AOPX010BGFX	AOPX010BGMX	AAPX010BGFX	AAPX010BGMX
PX010C	AOPX010CGFX	AOPX010CGMX	AAPX010CGFX	AAPX010CGMX
PX015C	AOPX015CGFX	AOPX015CGMX	AAPX015CGFX	AAPX015CGMX
PX020C	AOPX020CGFX	AOPX020CGMX	AAPX020CGFX	AAPX020CGMX
PX020D	AOPX020DGFX	AOPX020DGMX	AAPX020DGFX	AAPX020DGMX
PX025D	AOPX025DGFX	AOPX025DGMX	AAPX025DGFX	AAPX025DGMX
PX025E	AOPX025EGFX	AOPX025EGMX	AAPX025EGFX	AAPX025EGMX
PX030G	AOPX030GGFX	AOPX030GGMX	AAPX030GGFX	AAPX030GGMX
PX035G	AOPX035GGFX	AOPX035GGMX	AAPX035GGFX	AAPX035GGMX
PX040H	AOPX040HGFX	AOPX040HGMX	AAPX040HGFX	AAPX040HGMX
PX045I	AOPX045IGFX	AOPX045IGMX	AAPX045IGFX	AAPX045IGMX
PX050I	AOPX050IGFX	AOPX050IGMX	AAPX050IGFX	AAPX050IGMX
PX055I	AOPX055IGFX	AOPX055IGMX	AAPX055IGFX	AAPX055IGMX
PX055J	AOPX055JGFX	AOPX055JGMX	AAPX055JGFX	AAPX055JGMX

OIL- X Grades WS/AO/AA/ACS/OVR

Quality Assurance / IP Rating / Pressure Vessel Approvals

Development / Manufacture	ISO 9001 / ISO 14001
Ingress Protection Rating	Not Applicable
EU	Pressure vessel approved for fluid group 2 in accordance with the Pressure Equipment Directive 2014/68/EU
USA	Approval to ASME VIII Div. 1 not required
AUS	Approval to AS1210 not required
For use with Compressed Air, N_2 & CO_2	

The Parker Compressed Air Filtration Solution

Liquid Separators (OIL-X Grade WS and Hypersep STH/SFH)
Although called water separators, they reduce the content of all liquids at the point of installation. Liquid separators are usually the first piece of purification equipment installed downstream of an after-cooler or wet air receiver and should be used to protect coalescing filters from liquid contamination. They will only reduce liquids and will have no effect on water or oil in an aerosol or vapour phase.

Coalescing Filters (OIL-X Grades AO & AA)
Coalescing filters are probably the single most important items of purification equipment in a compressed air system. They are designed to not only remove aerosols (droplets) of oil and water using mechanical filtration techniques, but to remove solid particulate to very low levels (as small as 0.01 micron in size).

Installed in pairs, the first compressed air filter is a 'general purpose filter' which protects the second 'high efficiency filter' from bulk contamination.

Dry Particulate Filters (OIL-X Grades AO & AA)
Dry particulate filters provide identical particulate removal performance to the equivalent grade coalescing filter. Relying on mechanical filtration techniques, high efficiency dry particulate filters can provide particle reduction down to 0.01 micron with a removal efficiency of 99.9999%. When coupled with a Pressure Dewpoint ≤-40°C, to inhibit and control the growth of micro-organisms, they can provide significant reduction of microbiological contaminants.

Adsorption (Activated Carbon) Filters (OIL-X Grades ACS & OVR)
Oil vapour is oil in a gaseous form and will pass through a coalescing filter just as easily as the compressed air. Oil vapour removal filters provide a large bed of activated carbon adsorbent for the effective removal of oil vapour, providing a high level of protection against oil contamination.

The table below highlights the individual filtration and drying technologies that are required to treat each contaminant.

Purification Technologies	Contaminants								
	Atmospheric Particles	Rust and Pipescale	Micro-organisms	Liquid Water	Water Aerosol	Water Vapour	Liquid Oil	Oil Aerosol	Oil Vapour
Liquid Separator				●			●		
Coalescing Filters	●	●	●		●			●	
Adsorption Filter									●
Dryer						●			
Dry Particulate Filters		●	●						
Sterile Filter			●						

OIL-X Coalescing/Dry Particulate/ Oil Vapour Reduction Filters (Carbon Steel)

Filtration Performance

Filtration Grade	Filter Type	Particle Reduction (including water and oil aerosols)	Maximum Remaining Oil Content at 21°C (70°F)	Filtration Efficiency	Initial Dry Differential Pressure	Initial Saturated Differential Pressure	Change Element Every	Precede with Filtration Grade
AO	Coalescing & Dry Particulate	Down to 1 micron	0.5 mg/m³ 0.5 ppm(w)	99.925%	<70 mbar (1 psi)	<125 mbar (1.8 psi)	12 months	WS (for bulk liquid)
AA	Coalescing & Dry Particulate	Down to 0.01 micron	0.01 mg/m³ 0.01 ppm(w)	99.9999%	<70 mbar (1 psi)	<125 mbar (1.8 psi)	12 months	AO
ACS	Oil Vapour Reduction	N/A	0.003 mg/m³ 0.003 ppm(w)	N/A	<140 mbar (2 psi)	N/A	When oil vapour is detected	AO+AA

Important Note:

Using the same filter housings as their coalescing and dry particulate counterparts in the OIL-X range, Grade ACS filter elements differ in that they utilise a deep wrapped bed of carbon cloth to adsorb oil vapour.

It is important to note, in-line adsorption filter elements have a different life span compared to coalescing and dry particulate filters and require more frequent element changes. Should a 12 month service period be required, Parker OIL-X Grade OVR oil vapour reduction filters are recommended.

Technical Data

Filtration Grade	Filter Models	Minimum Operating Pressure		Maximum Operating Pressure		Minimum Operating Temperature		Maximum Operating Temperature	
		bar g	psi g	bar g	psi g	°C	°F	°C	°F
AO/AA	065 - 095 (Electronic Drain)	1	15	16	232	2	35	60	140
	065 - 095 (Manual Drain)	1	15	16	232	2	35	100	212
ACS	065 - 095 (Manual Drain)	1	15	16	232	2	35	50	122

Flow Rates

Model	Pipe Size	L/S	m³/min	m³/hr	cfm	Replacement Element	No.
Grade 065ND ☐ X	DN80	620	37.2	2232	1312	200 Grade	1
Grade 070OD ☐ X	DN100	1240	74.4	4464	2625	200 Grade	2
Grade 075PD ☐ X	DN150	1860	111.6	6696	3938	200 Grade	3
Grade 080PD ☐ X	DN150	2480	148.8	8928	5251	200 Grade	4
Grade 085QD ☐ X	DN200	3720	223.2	13392	7877	200 Grade	6
Grade 090RD ☐ X	DN250	6200	372	22320	13129	200 Grade	10
Grade 095SD ☐ X	DN300	8680	520.8	31248	18380	200 Grade	14

Filter Coding Example

Grade	Model	Pipe Size	Thread	Drain Option	Incident Monitor Option
AO AA ACS	3 digit code denotes filter housing size	Letter denotes pipe size	D = Din Flange	E = Electronic M = Manual	I = Indicator X = None
Example code					
AO	090	P	D	E	X

Stated flows are for operation at 7 bar (g) (102 psi g) with reference to 20°C, 1 bar (a), 0% relative water vapour pressure. For flows at other conditions, apply the correction factors shown below.

Select **E** for Electronic Drain type or **M** for Manual Drain type.

Product Selection & Correction Factors

To correctly select a filter model, the flow rate of the filter must be adjusted for the minimum operating (inlet) pressure at the point of installation.

1. Obtain the minimum operating (inlet) pressure and maximum compressed air flow rate at the inlet of the filter.
2. Select the correction factor for minimum inlet pressure from the CFMIP table (always round down e.g. for 5.3 bar, use 5 bar correction factor).
3. Calculate the minimum filtration capacity. Minimum Filtration Capacity = Compressed Air Flow Rate x CFMIP.
4. Using the minimum filtration capacity, select a filter model from the flow rate tables above (filter selected must have a flow rate equal to or greater than the minimum filtration capacity).

CFMIP - Correction Factor Minimum Inlet Pressure

Minimum Inlet Pressure	bar g	1	2	3	4	5	6	7	8	9	10	11	12	13	14	15	16
	psi g	15	29	44	58	73	87	100	116	131	145	160	174	189	203	218	232
Correction Factor		2.65	1.87	1.53	1.32	1.18	1.08	1.00	0.94	0.88	0.84	0.80	0.76	0.73	0.71	0.68	0.66

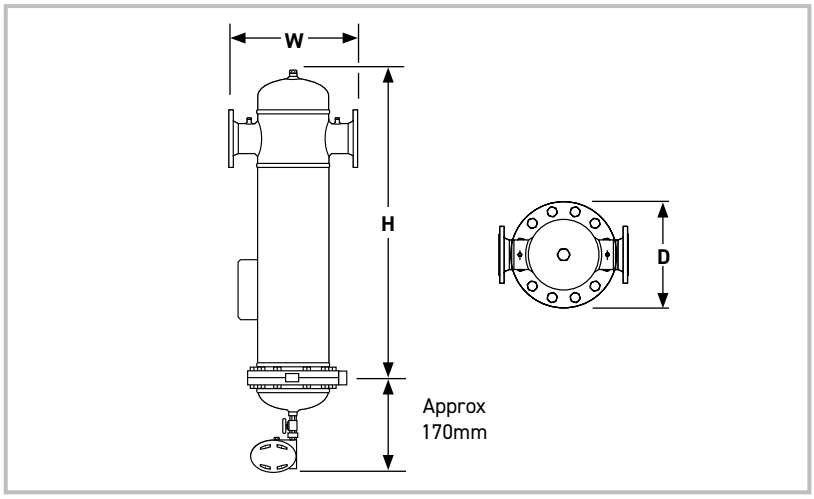

Weight & Dimensions

Model	Height (H)		Width (W)		Depth (D)		Weight	
	mm	ins	mm	ins	mm	ins	kg	lbs
065ND	1065	42	440	17.3	340	13.4	70	154
070OD	1152	45.4	500	19.7	405	16	97	214
075PD	1256	49.5	600	23.6	520	20.5	148	326
080PD	1332	52.4	650	25.6	580	22.8	187	412
085QD	1415	55.7	750	29.5	640	25.2	240	529
090RD	1603	63.1	1000	39.4	840	33	470	1036
095SD	1706	67.2	1050	41.3	910	35.8	580	1279

Parker Catalogue Numbers (No DPI)

Model	General Purpose Coalescing Filters	General Purpose Dry Particulate Filters	High Efficiency Coalescing Filters	High Efficiency Dry Particulate Filters	Oil Vapour Reduction Filters
065N	AO065NDEX	AO065NDMX	AA065NDEX	AA065NDMX	ACS065NDMX
070O	AO070ODEX	AO070ODMX	AA070ODEX	AA070ODMX	ACS070ODMX
075P	AO075PDEX	AO075PDMX	AA075PDEX	AA075PDMX	ACS075PDMX
080P	AO080PDEX	AO080PDMX	AA080PDEX	AA080PDMX	ACS080PDMX
085Q	AO085QDEX	AO085QDMX	AA085QDEX	AA085QDMX	ACS085QDMX
090P	AO090RDEX	AO090RDMX	AA090RDEX	AA090RDMX	ACS090RDMX
095S	AO095SDEX	AO095SDMX	AA095SDEX	AA095SDMX	ACS095SDMX

Parker Catalogue Numbers (With DPI)

Model	General Purpose Coalescing Filters	General Purpose Dry Particulate Filters	High Efficiency Coalescing Filters	High Efficiency Dry Particulate Filters
065N	AO065NDEI	AO065NDMI	AA065NDEI	AA065NDMI
070O	AO070ODEI	AO070ODMI	AA070ODEI	AA070ODMI
075P	AO075PDEI	AO075PDMI	AA075PDEI	AA075PDMI
080P	AO080PDEI	AO080PDMI	AA080PDEI	AA080PDMI
085Q	AO085QDEI	AO085QDMI	AA085QDEI	AA085QDMI
090P	AO090RDEI	AO090RDMI	AA090RDEI	AA090RDMI
095S	AO095SDEI	AO095SDMI	AA095SDEI	AA095SDMI

OIL-X Point Of Use Oil Vapour Reduction Filters

Filtration Performance

Filtration Grade	Filter Type	Particle Reduction (including water and oil aerosols)	Max. Remaining Oil Content at 21°C (70°F)	Filtration Efficiency	Change Element Every	Precede with Filtration Grade
ACS	Oil Vapour Reduction	N/A	0.003 mg/m³ 0.003 ppm(w)	N/A	When oil vapour is detected	AO + AA

Technical Data

Filtration Grade	Filter Models	Minimum Operating Pressure		Maximum Operating Pressure		Minimum Operating Temperature		Maximum Operating Temperature	
		bar g	psi g	bar g	psi g	°C	°F	°C	°F
ACS	PX010 - PX055 (Manual Drain)	1	15	20	290	2	35	50	122

Flow Rates

Model	Pipe Size	L/S	m³/min	m³/hr	cfm	Replacement Element	No.	Initial Dry Differential Pressure							
								100% Flow		75% Flow		50% Flow		25% Flow	
								mbar	psi	mbar	psi	mbar	psi	mbar	psi
ACSPX010A G MX	¼"	10	0.6	36	21	P010ACS	1	61	0.9	35	0.5	15	0.2	9	0.1
ACSPX010B G MX	⅜"	10	0.6	36	21	P010ACS	1	53	0.8	32	0.5	19	0.3	8	0.1
ACSPX010C G MX	½"	10	0.6	36	21	P010ACS	1	55	0.8	31	0.4	18	0.3	7	0.1
ACSPX015B G MX	⅜"	20	1.2	72	42	P015ACS	1	65	0.9	33	0.5	13	0.2	5	0.1
ACSPX015C G MX	½"	20	1.2	72	42	P015ACS	1	46	0.7	37	0.5	20	0.3	9	0.1
ACSPX020C G MX	½"	30	1.8	108	64	P020ACS	1	77	1.1	35	0.5	15	0.2	7	0.1
ACSPX020D G MX	¾"	30	1.8	108	64	P020ACS	1	79	1.1	37	0.5	17	0.2	8	0.1
ACSPX025D G MX	¾"	60	3.6	216	127	P025ACS	1	66	1.0	34	0.5	14	0.2	4	0.1
ACSPX025E G MX	1"	60	3.6	216	127	P025ACS	1	46	0.7	24	0.3	13	0.2	4	0.1
ACSPX030E G MX	1"	110	6.6	396	233	P030ACS	1	57	0.8	27	0.4	16	0.2	8	0.1
ACSPX030G G MX	1½"	110	6.6	396	233	P030ACS	1	65	0.9	35	0.5	15	0.2	5	0.1
ACSPX035G G MX	1½"	160	9.6	576	339	P035ACS	1	26	0.4	12	0.2	8	0.1	4	0.1
ACSPX040H G MX	2"	220	13.2	792	466	P040ACS	1	36	0.5	23	0.3	13	0.2	4	0.1
ACSPX045H G MX	2"	330	19.8	1188	699	P045ACS	1	49	0.7	34	0.5	17	0.2	6	0.1
ACSPX045I G MX	2½"	330	19.8	1188	699	P045ACS	1	68	1.0	40	0.6	20	0.3	6	0.1
ACSPX050I G MX	2½"	430	25.9	1548	911	P050ACS	1	50	0.7	30	0.4	15	0.2	5	0.1
ACSPX055I G MX	2½"	620	37.3	2232	1314	P055ACS	1	61	0.9	36	0.5	16	0.2	12	0.2
ACSPX055J G MX	3"	620	37.3	2232	1314	P055ACS	1	50	0.7	35	0.5	17	0.2	5	0.1

Stated flows are for operation at 7 bar (g) (102 psi g) with reference to 20°C, 1 bar (a), 0% relative water vapour pressure. For flows at other conditions, apply the correction factors shown below.

Select G for BSPP Threads/Select N for NPT Threads

When selecting a coalescing filter for pressures above 16 bar g (232 psi g), use manual drain version and fit an external automatic drain.

Product Selection & Correction Factors

To correctly select a filter model, the flow rate of the filter must be adjusted for the minimum operating (inlet) pressure at the point of installation.

1. Obtain the minimum operating (inlet) pressure and maximum compressed air flow rate at the inlet of the filter.
2. Select the correction factor for minimum inlet pressure from the CFMIP table (always round down e.g. for 5.3 bar, use 5 bar correction factor).
3. Calculate the minimum filtration capacity. Minimum Filtration Capacity = Compressed Air Flow Rate x CFMIP.
4. Using the minimum filtration capacity, select a filter model from the flow rate tables above (filter selected must have a flow rate equal to or greater than the minimum filtration capacity).

CFMIP - Correction Factor Minimum Inlet Pressure

Minimum Inlet Pressure	bar g	1	2	3	4	5	6	7	8	9	10	11	12	13	14	15	16	17	18	19	20
	psi g	15	29	44	58	73	87	100	116	131	145	160	174	189	203	218	232	248	263	277	290
Correction Factor		2.65	1.87	1.53	1.32	1.18	1.08	1.00	0.94	0.88	0.84	0.80	0.76	0.73	0.71	0.68	0.66	0.64	0.62	0.61	0.59

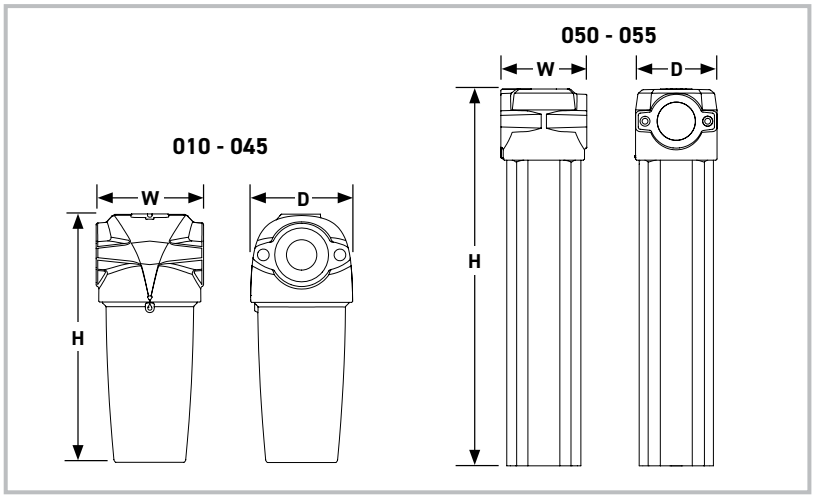

Weights & Dimensions

Model	Height (H)		Width (W)		Depth (D)		Weight	
	mm	ins	mm	ins	mm	ins	kg	lbs
PX010	180	7.09	76	2.99	65	2.56	0.81	1.78
PX015	238	9.37	89	3.50	84	3.31	1.41	3.10
PX020	238	9.37	89	3.50	84	3.31	1.41	3.10
PX025	277	10.91	120	4.72	115	4.53	2.66	5.86
PX030	367	14.45	120	4.72	115	4.53	3.01	6.63
PX035	440	17.32	164	6.46	157	6.18	6.87	15.14
PX040	532	20.94	164	6.46	157	6.18	7.18	15.82
PX045	532	20.94	164	6.46	157	6.18	7.18	15.82
PX050	654	25.75	192	7.56	183	7.20	10.18	22.43
PX055	844	33.23	192	7.56	183	7.20	15.78	34.78

Parker Catalogue Numbers (BSPP Models)

Model	Oil Vapour Reduction Filters
PX010A	ACSPX010AGMX
PX010B	ACSPX010BGMX
PX010C	ACSPX010CGMX
PX015C	ACSPX015CGMX
PX020C	ACSPX020CGMX
PX020D	ACSPX020DGMX
PX025D	ACSPX025DGMX
PX025E	ACSPX025EGMX
PX030G	ACSPX030GGMX
PX035G	ACSPX035GGMX
PX040H	ACSPX040HGMX
PX045I	ACSPX045IGMX
PX050I	ACSPX050IGMX
PX055I	ACSPX055IGMX
PX055J	ACSPX055JGMX

Multi-box Replacement Filter Elements

OIL-X Housing	Multi-Box Part Number	Box Quantity
PX010 & P010	P010ACSX25	25
PX015 & P015	P015ACSX25	25
PX020 & P020	P020ACSX25	25
PX025 & P025	P025ACSX12	12
PX030 & P030	P030ACSX12	12
PX035 & P035	P035ACSX15	15
PX040 & P040	P040ACSX15	15
PX045 & P045	P045ACSX15	15

OIL-X OVR Plant Scale Oil Vapour Reduction

Filtration Performance

Filtration Grade	Filter Type	Particle Reduction (including water and oil aerosols)	Maximum Remaining Oil Content*	Filtration Efficiency	Initial Dry Differential Pressure	Initial Saturated Differential Pressure	Adsorbent Life	Precede with Grade
OVR	Oil Vapour Reduction	N/A	⩽0.003 mg/m³ ⩽0.003 ppm (w)	N/A	<350 mbar <5 psi	N/A	*12 months	AO + AA

*At system operating temperature and when corrected to match systems conditions.

Technical Data

Filtration Grade	Filter Models	Minimum Operating Pressure		Maximum Operating Pressure		Minimum Operating Temperature		Maximum Operating Temperature	
		bar g	psi g	bar g	psi g	°C	°F	°C	°F
OVR	P300H - P550J	1	15	16	232	2	35	50	122

Flow Rates

Model	Pipe Size	L/s	m³/min	m³/hr	cfm	Replacement Cartridge	No.	Differential Pressure (OVR Only)							
								100% Flow		75% Flow		50% Flow		25% Flow	
								mbar	psi	mbar	psi	mbar	psi	mbar	psi
OVRP300H G XX	2"	80	4.8	289	170	P300OVR	1	350	5.1	198	2.9	46	0.7	11	0.2
OVRP350H G XX	2"	163	9.8	586	345	P350OVR	1	350	5.1	198	2.9	46	0.7	11	0.2
OVRP400I G XX	2½"	326	19.6	1172	690	P400OVR	1	350	5.1	198	2.9	46	0.7	11	0.2
OVRP450I G XX	2½"	488	29.4	1758	1035	P450OVR	1	350	5.1	198	2.9	46	0.7	11	0.2
OVRP500J G XX	3"	651	39.2	2345	1380	P500OVR	1	350	5.1	198	2.9	46	0.7	11	0.2
OVRP550J G XX	3"	814	48.9	2931	1725	P550OVR	1								
2 x OVRP550J G XX	3"	1629	97.9	5862	3451	P550OVR	2								
3 x OVRP550J G XX	3"	2443	146.8	8793	5176	P550OVR	3								
4 x OVRP550J G XX	3"	3257	195.8	11724	6901	P550OVR	4								
5 x OVRP550J G XX	3"	4071	244.7	14656	8626	P550OVR	5								

Stated flows are for operation at 7 bar (g) (102 psi g) with reference to 20°C, 1 bar (a), 0% relative water vapour pressure. For flows at other conditions, apply the correction factors shown on the next page.

Select G for BSPP Threads / Select N for NPT Threads

1. System Information Required for OVR Sizing and Selection

- Minimum pressure at the inlet of the OVR
- Compressor type (oil lubricated or oil free)
- Maximum inlet temperature at the inlet of the OVR (highest summer inlet temp)
- Maximum compressed air flow rate
- Dewpoint of the compressed air (i.e. is the proposed location of the unit before or after a compressed air dryer)
- Oil vapour concentration expected at the inlet of the OVR (default is 0.05 mg/m³)

2. Select Correction Factors

- For minimum inlet pressure, select a correction factor from the CFIP table that corresponds to the minimum inlet pressure of the compressed air system, remembering to always round down e.g. for 5.3 bar g use the 5 bar g correction factor.
- For maximum inlet temperature there are two tables, one for use with an oil lubricated compressor, the other for oil free compressor. Select a correction factor from the CFIT table for the relevant compressor type, remembering to always round up e.g. for 37 °C use the 40 °C correction factor.
- For pressure dewpoint, select a correction factor from the CFID table.
- For oil vapour concentration, select a correction factor from the CFIV table, remembering to always round up e.g. for 3.25g/m³ use the correction factor for 4mg/m³.

3. Calculate Minimum Filtration Capacity

- Minimum filtration Capacity = Compressed Air Flow x CFIT x CFMIP x CFID x CFIV
- Using the minimum filtration capacity, select an OVR model from the flow rate tables.
- The OVR model selected must have a flow rate equal to or greater than the minimum filtration capacity.
- If the minimum filtration capacity exceeds the maximum values of the models shown within the tables, please contact Parker for advice regarding larger multi-banked units.

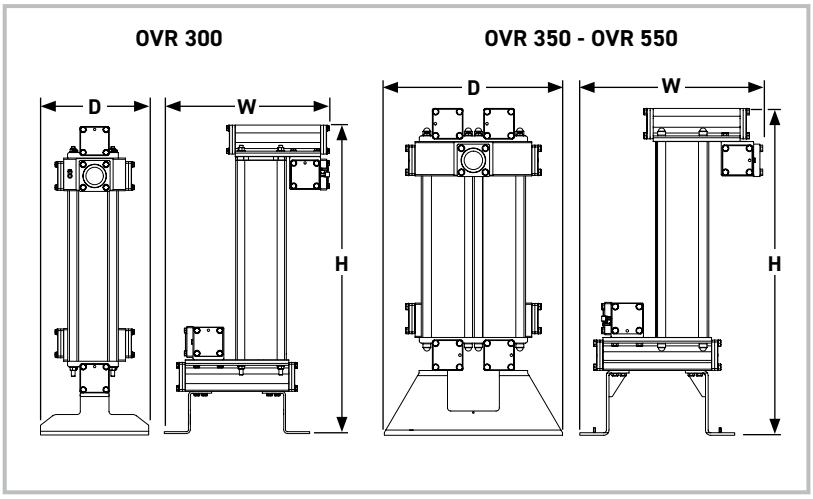

Correction Factors Inlet Temperature (CFIT)

Oil-lubricated compressors		
°C	°F	Correction Factor
25	77	1.00
30	86	1.00
35	95	1.00
40	104	1.25
45	113	1.55
50	122	1.90

Correction Factors Inlet Temperature (CFIT)

Oil-free compressors		
°C	°F	Correction Factor
25	77	1.00
30	86	1.00
35	95	1.00
40	104	1.02
45	113	1.04
50	122	1.05

Correction Factor Minimum Inlet Pressure (CFMIP)

Minimum Inlet Pressure	bar g	3	4	5	6	7	8	9	10	11	12	13	14	15	16
	psi g	44	58	73	87	100	116	131	145	160	174	189	203	218	232
Correction Factor		2.00	1.60	1.33	1.14	1.00	1.00	1.00	1.00	1.00	1.00	1.00	1.00	1.00	1.00

Correction Factor - Dewpoint (CFID)

Installation	Correction Factor
After Dryer	1.00
Before Dryer	4.00

Correction Factor Inlet Vapour Content (CFIV)

Inlet Vapour Concentration mg/m³	0.05	0.1	0.2	0.3	0.4	0.5	0.6	0.7	0.8	0.9	1.0	2.0	3.0	4.0	5.0
Correction Factor	1	2	4	6	8	10	12	14	16	18	20	40	60	80	100

Weight & Dimensions

Models	Height (H)		Width (W)		Depth (D)		Weight	
	mm	ins	mm	ins	mm	ins	kg	lbs
OVRP300	998	39.3	534	21.0	350	13.8	38	84
OVRP350	1062	41.8	538	21.2	550	21.7	67	147
OVRP400	1062	41.8	682	26.9	550	21.7	93	205
OVRP450	1062	41.8	836	32.9	550	21.7	121	267
OVRP500	1062	41.8	1005	39.6	550	21.7	144	318
OVRP550	1062	41.8	1174	46.2	550	21.7	171	377

Parker Catalogue Numbers

Model	Plant Scale Oil Vapour Reduction (BSPP)	Plant Scale Oil Vapour Reduction (NPT)
OVRP300	OVRP300HGXX	OVRP300HNXX
OVRP350	OVRP350HGXX	OVRP350HNXX
OVRP400	OVRP400HGXX	OVRP400HNXX
OVRP450	OVRP450IGXX	OVRP450INXX
OVRP500	OVRP500JGXX	OVRP500JNXX
OVRP550	OVRP550JGXX	OVRP550JNXX

OIL-X Railway and Transportation Filters

Technical Data

Filtration Grade	Filter Type	Drain Option	Minimum Operating Pressure		Maximum Operating Pressure		Minimum Operating Temperature		Maximum Operating Temperature	
			bar g	psi g	bar g	psi g	°C	°F	°C	°F
WS	Liquid Separator	Float (as standard)	1.5	22	16	232	2	35	65	149
AO/AA	Coalescing & Dry Particulate	Manual (as standard)	1.5	22	20	290	2	35	80	176

Important Note:
Liquid separator fitted with float drain as standard. Float drains not to be operated above 16 bar g. AO & AA grades fitted with manual drains as standard.

Flow Rates

Model	Pipe Size	L/S	m³/min	m³/hr	cfm	Replacement Element	No.
WSPX015B G FX	⅜"	40	2.4	144	85	N/A	0
AOPX015B G MX-N	⅜"	20	1.2	72	42	P015AO	1
AAPX015B G MX-N	⅜"	20	1.2	72	42	P015AA	1
WSPX015C G FX	½"	40	2.4	144	85	N/A	0
AOPX015C G MX-N	½"	20	1.2	72	42	P015AO	1
AAPX015C G MX-N	½"	20	1.2	72	42	P015AA	1
WSPX015C G FX	½"	40	2.4	144	85	N/A	0
AOPX020C G MX-N	½"	30	1.8	108	64	P020AO	1
AAPX020C G MX-N	½"	30	1.8	108	64	P020AA	1
WSPX020D G FX	¾"	40	2.4	144	85	N/A	0
AOPX020D G MX-N	¾"	30	1.8	108	64	P020AO	1
AAPX020D G MX-N	¾"	30	1.8	108	64	P020AA	1
WSPX025D G FX	¾"	110	6.6	396	233	N/A	0
AOPX025D G MX-N	¾"	60	3.6	216	127	P025AO	1
AAPX025D G MX-N	¾"	60	3.6	216	127	P025AA	1
WSPX025E G FX	1"	110	6.6	396	233	N/A	0
AOPX025E G MX-N	1"	60	3.6	216	127	P025AO	1
AAPX025E G MX-N	1"	60	3.6	216	127	P025AA	1
WSPX030G G FX	1½"	110	6.6	396	233	N/A	0
AOPX030G G MX-N	1½"	110	6.6	396	233	P030AO	1
AAPX030G G MX-N	1½"	110	6.6	396	233	P030AA	1
WSPX035G G FX	1½"	350	21	1260	742	N/A	0
AOPX035G G MX-N	1½"	160	9.6	576	339	P035AO	1
AAPX035G G MX-N	1½"	160	9.6	576	339	P035AA	1

Select G for BSPP Threads/Select N for NPT Threads

i) Stated flows are for operation at 7 bar g (100 psi g) with reference to 20°C, 1 bar (a), 0% relative water vapour pressure.

ii) For flows at other pressures, apply the correction factors shown below.

Filter Coding Examples

Grade	Model	Pipe Size	Thread	Drain Option	Incident Monitor	Unique Identifier
WS	PX & 3-digit code denotes filter housing size	Letter denotes pipe size	G = BSPP N = NPT	F = Float	X = None	N/A
AO AA	PX & 3-digit code denotes filter housing size	Letter denotes pipe size	G = BSPP N = NPT	M = Manual as Standard	X = None	N = Neutral non-Parker branded
Example code						
WS	PX015	A	G	F	X	
AA	PX035	G	N	M	X	N

Product Selection & Correction Factors

To correctly select a filter model, the flow rate of the filter must be adjusted for the minimum operating (inlet) pressure at the point of installation.

1. Obtain the minimum operating (inlet) pressure and maximum compressed air flow rate at the inlet of the filter.
2. Select the correction factor for minimum inlet pressure from the CFMIP table (always round down e.g. for 5.3 bar, use 5 bar correction factor).
3. Calculate the minimum filtration capacity. Minimum Filtration Capacity = Compressed Air Flow Rate x CFMIP.
4. Using the minimum filtration capacity, select a filter model from the flow rate tables above (filter selected must have a flow rate equal to or greater than the minimum filtration capacity).

CFMIP* - Correction Factor Minimum Inlet Pressure

*WS rated at 16 bar g float drain fitted as standard. AO/AA rated at 20 bar g manual drain fitted as standard.

Minimum Inlet Pressure	bar g	1	2	3	4	5	6	7	8	9	10	11	12	13	14	15	16	17	18	19	20
	psi g	15	29	44	58	73	87	100	116	131	145	160	174	189	203	218	232	248	263	277	290
Correction Factor		2.65	1.87	1.53	1.32	1.18	1.08	1.00	0.94	0.88	0.84	0.80	0.76	0.73	0.71	0.68	0.66	0.64	0.62	0.61	0.59

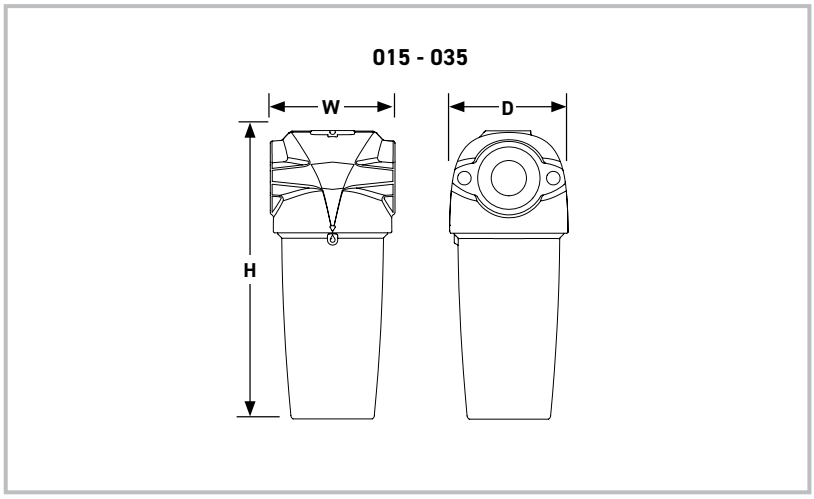

Weight & Dimensions

Model	Height (H)		Width (W)		Depth (D)		Weight			
							Grade WS		Grades AO/AA	
	mm	ins	mm	ins	mm	ins	kg	lbs	kg	lbs
015	238	9.37	89	3.50	84	3.31	1.41	3.10	1.41	3.10
020	238	9.37	89	3.50	84	3.31	1.41	3.10	1.41	3.10
025	277	10.91	120	4.72	115	4.53	2.66	5.86	2.66	5.86
030	367	14.45	120	4.72	115	4.53	2.66	5.86	3.01	6.63
035	440	17.32	164	6.46	157	6.18	6.87	15.14	6.87	15.14

Options and Accessories

A full range of optional accessories are available as part of the Oil-X transportation filter range upon request. These options include electrically operated solenoid drains, timer and heater assemblies.

Note: All accessories must be ordered separately.

Solenoid Drain

Part Number	Description	Voltage
SK1-24NC	Solenoid Drain with Normally Closed Configuration	24 VDC
SK1-72NC	Solenoid Drain with Normally Closed Configuration	72 VDC
SK1-110NC	Solenoid Drain with Normally Closed Configuration	110 VDC
SK1-24NO	Solenoid Drain with Normally Open Configuration	24 VDC
SK1-72NO	Solenoid Drain with Normally Open Configuration	72 VDC
SK1-110NO	Solenoid Drain with Normally Open Configuration	110 VDC

Drain Timer Kit

Part Number	Description	Voltage
TK1-NO	Timer Kit for Normally Open Operation	N/A
TK1-NC	Timer Kit for Normally Open Operation	N/A

Filter Heater Kit

Part Number	Description	Voltage
WP1-24	Filter Heater for Normally Open & Normally Closed Operation (Universal)	24 VDC
WP1-72	Filter Heater for Normally Open & Normally Closed Operation (Universal)	72 VDC
WP1-110	Filter Heater for Normally Open & Normally Closed Operation (Universal)	110 VDC

Filter Wall Mount Brackets
(for single filters)

Part Number	Filter Model / Number of
MBK2-1	015-020 x 1
MBK3-1	025-030 x 1
MBK4-1	035 x 1

Filter Wall Mount Brackets
(for 2 or 3 in series)

Part Number	Filter Model/Number of
MBK1-2	010 x 2 and x 3
MBK2-2	015-020 x 2 and x 3
MBK3-2	025 - 030 x 2 and x 3
MBK4-2	035 x 2 and x 3

Tie Rods
(for 2 or 3 in series)

Part Number	Filter Model/Number of
TRK2-2	015 to 020 x 2 and x 3
TRK3-2	025 to 030 x 2 and x 3
TRK4-2	035 x 2 and x 3

OEM Compressed Air Filters - Up to 16 and 20 barg

Filtration Performance

Filtration Grade	Filter Type	Particle Reduction (including water and oil aerosols)	Max Remaining Oil Content at 21°C (70°F)	Filtration Efficiency	Element Change Interval	Precede with Filtration Grade
AO	Coalescing	Down to 1 micron	0.5 mg/m³ (0.5 ppm(w)	99.925%	12 months	Liquid Separator
	Dry Particulate		N/A			N/A
AA	Coalescing	Down to 0.01 micron	0.01 mg/m³ - 0.01 ppm(w)	99.9999%	12 months	AO Coalesing
	Dry Particulate		N/A			AO Dry Particulate
ACS	Oil Vapour Reduction	N/A	0.003 mg/m³ - (0.003 ppm(w)	N/A	When oil vapour is detected	AO and AA

Technical Data

Filtration Grade	Filter Models	Minimum Operating Pressure		Maximum Operating Pressure		Minimum Operating Temperature		Maximum Operating Temperature	
		bar g	psi g	bar g	psi g	ºC	ºF	ºC	ºF
AO/AA	PX010-055 (Float Drain)	1.5	22	16	232	2	35	65	149
AO/AA	PX010-055 (Manual Drain)	1	15	20	290	2	35	80	176
ACS	PX010-055 (Manual Drain)	1	15	20	290	2	35	50	122

Flow Rates

Stated flows are for operation at 7 bar (g) (102 psi g) with reference to 20°C, 1 bar (a), 0% relative water vapour pressure.

Filtration Grade	Part Numbers	Pipe Size	L/S	m³/min	m³/hr	cfm	Replacement Element	No.
AO Coalescing and Dry Particulate Filters	AOPX010BG F X-BL	⅜"	10	0.6	36	21	P010AO	1
	AOPX015CG F X-BL	½"	20	1.2	72	42	P015AO	1
	AOPX020DG F X-BL	¾"	30	1.8	108	64	P020AO	1
	AOPX025EG F X-BL	1"	60	3.6	216	127	P025AO	1
	AOPX030GG F X-BL	1½"	110	6.6	396	233	P030AO	1
	AOPX035GG F X-BL	1½"	160	9.6	576	339	P035AO	1
	AOPX040HG F X-BL	2"	220	13.2	792	466	P040AO	1
	AOPX045IG F X-BL	2½"	430	25.9	1548	911	P050AO	1
	AOPX050IG F X-BL	2½"	430	25.9	1548	911	P050AO	1
	AOPX055JG F X-BL	3"	620	37.3	2232	1314	P055AO	1
AA Coalescing and Dry Particulate Filters	AAPX010BG F X-BL	⅜"	10	0.6	36	21	P010AA	1
	AAPX015CG F X-BL	½"	20	1.2	72	42	P015AA	1
	AAPX020DG F X-BL	¾"	30	1.8	108	64	P020AA	1
	AAPX025EG F X-BL	1"	60	3.6	216	127	P025AA	1
	AAPX030GG F X-BL	1½"	110	6.6	396	233	P030AA	1
	AAPX035GG F X-BL	1½"	160	9.6	576	339	P035AA	1
	AAPX040HG F X-BL	2"	220	13.2	792	466	P040AA	1
	AAPX045IG F X-BL	2½"	430	25.9	1548	911	P050AA	1
	AAPX050IG F X-BL	2½"	430	25.9	1548	911	P050AA	1
	AAPX055JG F X-BL	3"	620	37.3	2232	1314	P055AA	1
ACS Oil Vapour Reduction Filters	ACSPX010BGMX-BL	⅜"	10	0.6	36	21	P010ACS	1
	ACSPX015CGMX-BL	½"	20	1.2	72	42	P015ACS	1
	ACSPX020DGMX-BL	¾"	30	1.8	108	64	P020ACS	1
	ACSPX025EGMX-BL	1"	60	3.6	216	127	P025ACS	1
	ACSPX030GGMX-BL	1½"	110	6.6	396	233	P030ACS	1
	ACSPX035GGMX-BL	1½"	160	9.6	576	339	P035ACS	1
	ACSPX040HGMX-BL	2"	220	13.2	792	466	P040ACS	1
	ACSPX045IGMX-BL	2½"	430	25.9	1548	911	P050ACS	1
	ACSPX050IGMX-BL	2½"	430	25.9	1548	911	P050ACS	1
	ACSPX055JGMX-BL	3"	620	37.3	2232	1314	P055ACS	1

CFMIP - Correction Factor

Minimum Line Pressure		Correction Factor
bar g	psi g	
1	15	2.65
1.5	22	2.16
2	29	1.87
2.5	37	1.67
3	44	1.53
3.5	51	1.41
4	58	1.32
4.5	66	1.25
5	73	1.18
5.5	80	1.13
6	87	1.08
6.5	95	1.04
7	100	1.00
7.5	110	0.97
8	116	0.94
8.5	124	0.91
9	131	0.88
9.5	139	0.86
10	145	0.84
10.5	153	0.82
11	160	0.80
11.5	168	0.78
12	174	0.76
12.5	183	0.75
13	189	0.73
13.5	197	0.72
14	203	0.71
14.5	212	0.69
15	218	0.68
15.5	226	0.67
16	232	0.66
17	248	0.64
18	263	0.62
19	277	0.61
20	290	0.59

Select **F** for AA/AO coalescing filters with float drains. **M** for AA/AO dry particulate filters with manual drains.

When selecting a coalescing filter for pressures above 16 bar g (232 psi g), use manual drain version and fit an external automatic drain.

Product Selection & Correction Factors

To correctly select a filter model, the flow rate of the filter must be adjusted for the minimum operating (inlet) pressure at the point of installation.

1. Obtain the minimum operating (inlet) pressure and maximum compressed air flow rate at the inlet of the filter.
2. Select the **Correction Factor For Minimum Inlet Pressure (CFMIP)** from the table on the right, (always round down e.g. for 5.3 bar, use 5 bar correction factor)
3. Calculate the minimum filtration capacity. **Minimum Filtration Capacity = Compressed Air Flow Rate x CFMIP**
4. Using the minimum filtration capacity, select a filter model from the flow rate tables above (filter selected must have a flow rate equal to or greater than the minimum filtration capacity).

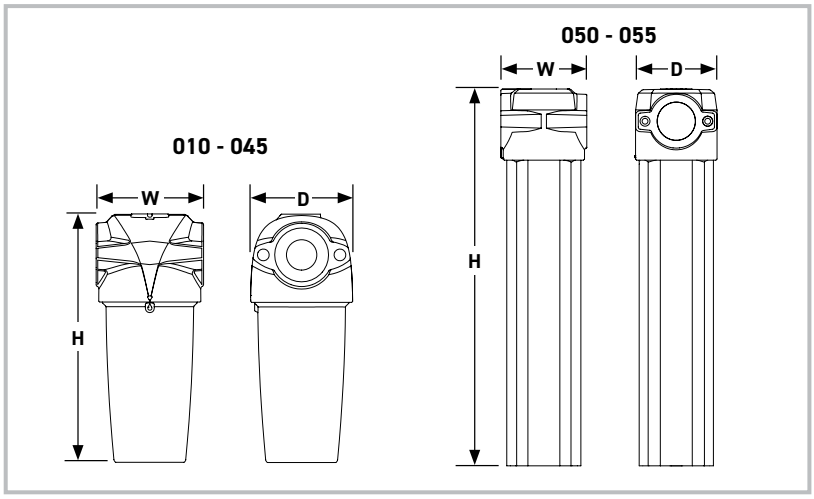

Part Number Configuration - Example: AOPX10BGFX-BL

Filtration Grade	Model Size	Port Size	Port Type	Drain	DP Indicator		Colour
AO	PX010	B	G	F	X	-	BL
|	|	|	|	|	|		|
AO = General Purpose	PX010	B = ⅜"	G = BSPP	F = Float	X = None	-	BL = Blue
AA = High Efficiency	PX015	C = 1"		M = Manual			
ACS = Oil Vapor Reduction	PX020	D = ¾"					
	PX025	E =1"					
	PX030	G =1½"					
	PX035	H = 2"					
	PX040	G = 2½"					
	PX045	J = 3"					
	PX050						
	PX055						

Drain Options

Float Drain

Grades AO and **AA** coalescing filters are fitted with energy efficient, zero air loss float drains as standard for the removal of coalesced liquids.

Manual Drain

Grades AO and **AA** dry particulate filter variants, and **Grade ACS** oil vapour filters are fitted with a manual drain valve.

Weight & Dimensions

Model	Height (H)		Width (W)		Depth (D)		Weight	
	mm	ins	mm	ins	mm	ins	kg	lbs
PX010	180	7.09	76	2.99	65	2. 56	0.81	1.78
PX015	238	9.37	89	3.50	84	3.31	1.41	3.10
PX020	238	9.37	89	3.50	84	3.31	1.41	3.10
PX025	277	10.91	120	4.72	115	4.53	2.66	5.86
PX030	367	14.45	120	4.72	115	4.53	3.01	6.63
PX035	440	17.32	164	6.46	157	6.18	6.87	15.14
PX040	532	20.94	164	6.46	157	6.18	7.18	15.82
PX045	532	20.94	164	6.46	157	6.18	7.18	15.82
PX050	654	25.75	192	7.56	183	7.20	10.18	22.43
PX055	844	33.23	192	7.56	183	7.20	15.78	34.78

0003G Micro Filters

Filtration Performance

Filtration Grade	Filter Type	Particle Reduction (including water and oil aerosols)	Maximum Remaining Oil Content at 21°C (70°F)	Filtration Efficiency	Initial Dry Differential Pressure	Initial Saturated Differential Pressure	Change Element Every	Precede with Filtration Grade
AO	Coalescing & Dry Particulate	Down to 1 micron	0.5 mg/m³ 0.5 ppm(w)	99.925%	<70 mbar (<1 psi)	<140 mbar (<2 psi)	12 months	-
AA	Coalescing & Dry Particulate	Down to 0.01 micron	0.01 mg/m³ 0.01 ppm(w)	99.9999%	<140 mbar (<1.5 psi)	<200 mbar (<3 psi)	12 months	AO

Important Note:
Using the same filter housings as their coalescing and dry particulate counterparts, Grade ACS filter elements differ in that they utilise a wrapped bed of carbon cloth to adsorb oil vapour. It is important to note, in-line adsorption filter elements have a different life span compared to coalescing and dry particulate filters and require more frequent element changes.

Technical Data

Filtration Grade	Filter Models	Minimum Operating Pressure		Maximum Operating Pressure		Minimum Operating Temperature		Maximum Operating Temperature	
		bar g	psi g	bar g	psi g	°C	°F	°C	°F
AO/AA	0003G	1	14.5	10	145	2	35	50	122

Flow Rates

Model	Pipe Size	L/S	m³/min	m³/hr	cfm	Replacement Element	No.
AO-0003G	8mm Push In	3	0.18	11	6	K003AO	1
AA-0003G	8mm Push In	3	0.18	11	6	K003AA	1

All models include a manual/constant bleed drain.

Stated flows are for operation at 7 bar (g) (102 psi g) with reference to 20°C, 1 bar (a), 0% relative water vapour pressure. For flows at other conditions, apply the correction factors shown below.

Product Selection & Correction Factors

To correctly select a filter model, the flow rate of the filter must be adjusted for the minimum operating (inlet) pressure at the point of installation.

1. Obtain the minimum operating (inlet) pressure and maximum compressed air flow rate at the inlet of the filter.
2. Select the correction factor for minimum inlet pressure from the CFMIP table (always round down e.g. for 5.3 bar, use 5 bar correction factor).
3. Calculate the minimum filtration capacity. Minimum Filtration Capacity = Compressed Air Flow Rate x CFP.
4. Using the minimum filtration capacity, select a filter model from the flow rate tables above (filter selected must have a flow rate equal to or greater than the minimum filtration capacity).

CFMIP - Correction Factor Minimum Inlet Pressure

Minimum Inlet Pressure	bar g	1	2	3	4	5	6	7	8	9	10
	psi g	15	29	44	58	73	87	100	116	131	145
Correction Factor		2.65	1.87	1.53	1.32	1.18	1.08	1.00	0.94	0.88	0.84

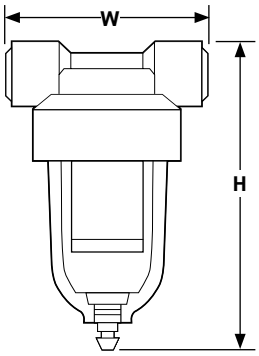

Weight & Dimensions

Model	Height (H)		Width (W)		Depth (D)		Weight	
	mm	ins	mm	ins	mm	ins	kg	lbs
0003G	89	3.5	58	2.3	56	2.2	0.1	0.2

Parker Catalogue Numbers

Model	General Purpose Coalescing Filters	General Purpose Dry Particulate Filters
0003G	AO-0003G	AA-0003G

OIL-X Filter Accessories

Filter Wall Mount Brackets
(for single filters)

Part Number	Filter Model / Number of
MBK1-1	010 x 1
MBK2-1	015-020 x 1
MBK3-1	025-030 x 1
MBK4-1	035-045 x 1
MBK5-1	050-055 x 1

Filter Wall Mount Brackets
(for 2 or 3 in series)

Part Number	Filter Model / Number of
MBK1-2	010 x 2 and x 3
MBK2-2	015-020 x 2 and x 3
MBK3-2	025 - 030 x 2 and x 3
MBK4-2	035 - 045 x 2 and x 3
MBK5-2	050 - 055 x 2 and x 3

Tie Rods
(for 2 or 3 in series)

Part Number	Filter Model / Number of
TRK1-2	010 x 2 and x 3
TRK2-2	015 to 020 x 2 and x 3
TRK3-2	025 to 030 x 2 and x 3
TRK4-2	035 to 045 x 2 and x 3
TRK5-2	050 to 055 x 2 and x 3

Automatic Float and Manual Drains

Part Number	Description
M12.FD.0001	Float Auto 010 to 055
EM1	Manual Drain 010 to 055 (Maximum Operating Pressure 20 bar g)
HDF120A	Float Auto 060
605006470	Manual Drain 060

Zero Loss ED Electronic Drains

Part Number	Filter Model / Number of
ED3002-G230	010 to 030
ED3004-G230	035 to 055
ED3007-G230	60
MK-G15-G10I	ED3002 Mounting kit G½
MK-G25-G15	ED3004-3100 Mounting kit G½

Blanking Plate Kit
OIL-X 010 - 055 (AO, AA, ACS)

Part Number	601181213
Contents Blanking Plate (x1) M5 x 16mm bolts (x4) M5 Washer (x4) O-Ring (x2) Direction of Flow Label (x1) ¼" Blanking Plug (x2)	

Differential Pressure Gauge

Part Number	DPGK.010-055
For Filter Models 010 to 055	
OIL-X Size 2 filter fitted with DPGK.010-055	

Unless stated otherwise all differential pressure gauges and condensate drains have a maximum operating pressure of 16 bar g.

K-MT Small Flow Heatless Adsorption Dryers

Dryer Performance

Dryer Models	Dewpoint (Standard)		ISO8573-1:2010 Classification (Standard)	Dewpoint (Option 1)		ISO8573-1:2010 Classification (Option 1)	Dewpoint (Option 2)		ISO8573-1:2010 Classification (Option 2)
	°C	°F		°C	°F		°C	°F	
K-MT 1-4	-40	-40	Class 2:2:2	-70	-100	Class 2:1:2	-25	-13	Class 2:3:2

ISO8573-1 Classifications when used with Parker OIL-X pre/post filtration.

Technical Data

Dryer Models	Minimum Operating Pressure		Maximum Operating Pressure		Minimum Operating Temperature		Maximum Operating Temperature		Maximum Ambient Temperature		Electrical Supply (Standard)	Electrical Supply (Optional)	Thread Type	Noise Level
	bar g	psi g	bar g	psi g	°C	°F	°C	°F	°C	°F				dB(A)
K-MT 1-4	4	58	16	232	5	41	50	122	50	122	230V 1ph 50/60Hz	115V 1ph 50/60Hz or 24V DC	BSPP	65-86

Flow Rates

Model	Pipe Size	Inlet Flow Rate			
		L/s	m^3/min	m^3/hr	cfm
K-MT 1	¼"	2	0.13	8	5
K-MT 2	¼"	4	0.25	15	9
K-MT 3	¼"	7	0.42	25	15
K-MT 4	¼"	10	0.58	35	21

Inlet flow rate relating to 1 bar(a) and 20°C; relating to the suction performance of the compressor, compression at 7 bar(g) and 35°C dryer inlet temperature, at 25°C ambient temperature, 60% relative humidity.

Product Selection & Correction Factors

For correct operation, compressed air dryers must be sized using for the maximum (summer) inlet temperature, maximum (summer) ambient temperature, minimum inlet pressure, required outlet dewpoint and maximum flow rate of the installation.

To select a dryer, first calculate the MDC (Minimum Drying Capacity) using the formula below then select a dryer from the flow rate table above with a flow rate equal to or above the MDC.

Minimum Drying Capacity = System Flow x CFIT x CFAT x CFMIP x CFOD

CFIT - Correction Factor Maximum Inlet Temperature

Maximum Inlet Temperature	°C	25	30	35	40	45	50
	°F	77	86	95	104	113	122
Correction Factor		0.94	0.95	1.00	1.15	1.22	1.28

CFAT - Correction Factor Maximum Ambient Temperature

Maximum Ambient Temperature	°C	25	30	35	40	45	50
	°F	77	86	95	104	113	122
Correction Factor		1.00	1.00	1.00	1.00	1.00	1.00

CFMIP - Correction Factor Minimum Inlet Pressure

Minimum Inlet Pressure	bar g	4	5	6	7	8	9	10	11	12	13	14	15	16
	psi g	58	73	87	100	116	131	145	160	174	189	203	218	232
Correction Factor		1.60	1.33	1.12	1.00	0.88	0.79	0.76	0.74	0.67	0.62	0.59	0.56	0.53

CFOD - Correction Factor Outlet Dewpoint

Outlet Dewpoint	°C	-25	-40	-70
	°F	-13	-40	-100
Correction Factor		1.00	1.00	2.00

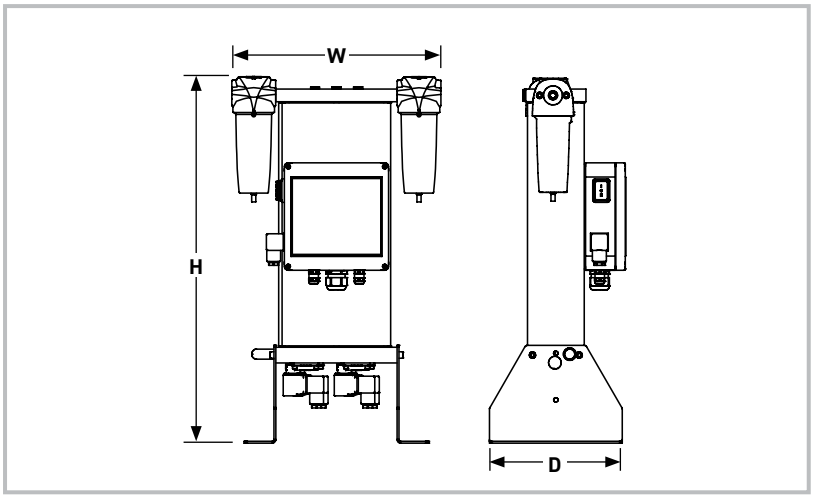

Weights & Dimensions

Model	Dimensions						Weight	
	Height (H)		Width (W)		Depth (D)			
	mm	ins	mm	ins	mm	ins	kg	lbs
K-MT 1	403	16	345	14	210	8	11.5	25
K-MT 2	578	23	345	14	210	8	15.5	34
K-MT 3	828	33	345	14	210	8	20.0	44
K-MT 4	1078	42	345	14	210	8	25.0	55

Filtration (Required/Included)

Model	Pipe Size BSPP	Dryer Inlet			Dryer Outlet		
		Required	Required	Included	Not Included	Included	Not Included
		Liquid Separator	General Purpose Coalescing Filter	High Efficiency Coalescing Filter	Oil Vapour Reduction Filter	General Purpose Dry Particulate Filter	High Efficiency Dry Particulate Filter
K-MT 1	¼"	WSPX010A	AOPX010A	AAPX010A	-	AOPX010A	-
K-MT 2	¼"	WSPX010A	AOPX010A	AAPX010A	-	AOPX010A	-
K-MT 3	¼"	WSPX010A	AOPX010A	AAPX010A	-	AOPX010A	-
K-MT 4	¼"	WSPX010A	AOPX010A	AAPX010A	-	AOPX010A	-

Parker Catalogue Numbers 230V/1ph/50Hz-60Hz

Model	No Dewpoint Sensor	With Dewpoint Sensor
K-MT 1	K1/16D3-G230M	K1/16D3-G230MT
K-MT 2	K2/16D3-G230M	K2/16D3-G230MT
K-MT 3	K3/16D3-G230M	K3/16D3-G230MT
K-MT 4	K4/16D3-G230M	K4/16D3-G230MT

KA-MT Small Flow Heatless Adsorption Dryers

Dryer Performance

Dryer Models	Dewpoint (Standard)		ISO8573-1:2010 Classification (Standard)	Dewpoint (Option 1)		ISO8573-1:2010 Classification (Option 1)	Dewpoint (Option 2)		ISO8573-1:2010 Classification (Option 2)
	°C	°F		°C	°F		°C	°F	
KA-MT 1-4	-40	-40	Class 2:2:1	-70	-100	Class 2:1:1	-25	-13	Class 2:3:1

ISO8573-1 Classifications when used with Parker OIL-X pre/post filtration.

Technical Data

Dryer Models	Minimum Operating Pressure		Maximum Operating Pressure		Minimum Operating Temperature		Maximum Operating Temperature		Maximum Ambient Temperature		Electrical Supply (Standard)	Electrical Supply (Optional)	Thread Type	Noise Level
	bar g	psi g	bar g	psi g	°C	°F	°C	°F	°C	°F				dB(A)
KA-MT 1-4	4	58	16	232	5	41	50	122	50	122	230V 1ph 50/60Hz	115V 1ph 50/60Hz or 24V DC	BSPP	65-86

Flow Rates

Model	Pipe Size	Inlet Flow Rate			
		L/s	m^3/min	m^3/hr	cfm
KA-MT 1	¼"	2	0.13	8	5
KA-MT 2	¼"	4	0.25	15	9
KA-MT 3	¼"	7	0.42	25	15
KA-MT 4	¼"	10	0.58	35	21

Inlet flow rate relating to 1 bar(a) and 20°C; relating to the suction performance of the compressor, compression at 7 bar(g) and 35°C dryer inlet temperature, at 25°C ambient temperature, 60% relative humidity.

Product Selection & Correction Factors

For correct operation, compressed air dryers must be sized using for the maximum (summer) inlet temperature, maximum (summer) ambient temperature, minimum inlet pressure, required outlet dewpoint and maximum flow rate of the installation.

To select a dryer, first calculate the MDC (Minimum Drying Capacity) using the formula below then select a dryer from the flow rate table above with a flow rate equal to or above the MDC.

Minimum Drying Capacity = System Flow x CFIT x CFAT x CFMIP x CFOD

CFIT - Correction Factor Maximum Inlet Temperature

Maximum Inlet Temperature	°C	25	30	35	40	45	50
	°F	77	86	95	104	113	122
Correction Factor		0.94	0.95	1.00	1.15	1.22	1.28

CFAT - Correction Factor Maximum Ambient Temperature

Maximum Ambient Temperature	°C	25	30	35	40	45	50
	°F	77	86	95	104	113	122
Correction Factor		1.00	1.00	1.00	1.00	1.00	1.00

CFMIP - Correction Factor Minimum Inlet Pressure

Minimum Inlet Pressure	bar g	4	5	6	7	8	9	10	11	12	13	14	15	16
	psi g	58	73	87	100	116	131	145	160	174	189	203	218	232
Correction Factor		1.60	1.33	1.12	1.00	0.88	0.79	0.76	0.74	0.67	0.62	0.59	0.56	0.53

CFOD - Correction Factor Outlet Dewpoint

Outlet Dewpoint	°C	-25	-40	-70
	°F	-13	-40	-100
Correction Factor		1.00	1.00	2.00

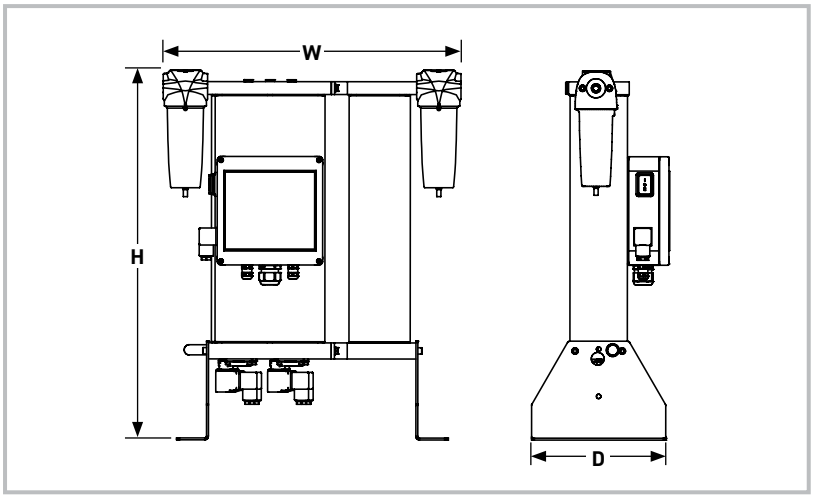

Weights & Dimensions

Model	Dimensions						Weight	
	Height (H)		Width (W)		Depth (D)			
	mm	ins	mm	ins	mm	ins	kg	lbs
KA-MT 1	403	16	486	19	210	8	15	33
KA-MT 2	578	23	486	19	210	8	20	44
KA-MT 3	828	33	486	19	210	8	28	62
KA-MT 4	1078	42	486	19	210	8	35	77

Filtration (Required/Included)

Model	Pipe Size BSPP	Dryer Inlet			Dryer Outlet		
		Required	Required	Included	Included	Included	Not Included
		Liquid Separator	General Purpose Coalescing Filter	High Efficiency Coalescing Filter	Oil Vapour Reduction Filter	General Purpose Dry Particulate Filter	High Efficiency Dry Particulate Filter
KA-MT 1	¼"	WSPX010A	AOPX010A	AAPX010A	Integrated	AOPX010A	-
KA-MT 2	¼"	WSPX010A	AOPX010A	AAPX010A	Integrated	AOPX010A	-
KA-MT 3	¼"	WSPX010A	AOPX010A	AAPX010A	Integrated	AOPX010A	-
KA-MT 4	¼"	WSPX010A	AOPX010A	AAPX010A	Integrated	AOPX010A	-

Parker Catalogue Numbers 230V/1ph/50Hz-60Hz

Model	Catalogue Number No Dewpoint Sensor	Catalogue Number With Dewpoint Sensor
KA-MT 1	K1/16DA3-G230M	K1/16DA3-G230MT
KA-MT 2	K2/16DA3-G230M	K2/16DA3-G230MT
KA-MT 3	K3/16DA3-G230M	K3/16DA3-G230MT
KA-MT 4	K4/16DA3-G230M	K4/16DA3-G230MT

CDAS HL Medium Flow Heatless Adsorption Dryers

Dryer Performance

Dryer Models	Dewpoint (Standard)		ISO8573-1:2010 Classification (Standard)	Dewpoint (Option 1)		ISO8573-1:2010 Classification (Option 1)	Dewpoint (Option 2)		ISO8573-1:2010 Classification (Option 2)
	°C	°F		°C	°F		°C	°F	
CDAS HL 050 - 085	-40	-40	Class 2:2:2	-70	-100	Class 2:1:2	-20	-4	Class 2:3:2

ISO8573-1 Classifications when used with OIL-X pre/post filtration.

Technical Data

Dryer Models	Minimum Operating Pressure		Maximum Operating Pressure		Minimum Operating Temperature		Maximum Operating Temperature		Maximum Ambient Temperature		Electrical Supply (Standard)	Electrical Supply (Optional)	Thread Type	Noise Level
	bar g	psi g	bar g	psi g	°C	°F	°C	°F	°C	°F				dB(A)
CDAS HL 050 - 085	4	58	16	232	5	41	50	122	55	131	100-240V +/-10% 1ph 50/60Hz	24V DC	BSPP or NPT	<75

Flow Rates

Model	Pipe Size	Inlet Flow Rate			
		L/s	m^3/min	m^3/hr	cfm
CDAS HL 050	½"	15	0.92	55	32
CDAS HL 055	½"	19	1.17	70	41
CDAS HL 060	½"	25	1.50	90	53
CDAS HL 065	½"	31	1.84	110	65
CDAS HL 070	¾"	42	2.51	150	88
CDAS HL 075	1"	51	3.09	185	109
CDAS HL 080	1"	61	3.67	220	129
CDAS HL 085	1½"	83	5.01	300	177

Stated flows are for operation at 7 bar (g) (102 psi g) with reference to 20°C, 1 bar (a), 0% relative water vapour pressure. For flows at other pressures, apply the correction factors shown below.

Product Selection & Correction Factors

For correct operation, compressed air dryers must be sized using for the maximum (summer) inlet temperature, maximum (summer) ambient temperature, minimum inlet pressure, required outlet dewpoint and maximum flow rate of the installation.

To select a dryer, first calculate the MDC (Minimum Drying Capacity) using the formula below then select a dryer from the flow rate table above with a flow rate equal to or above the MDC.

Minimum Drying Capacity = System Flow x CFMIT x CFMAT x CFMIP x CFOD

CFMIT - Correction Factor Maximum Inlet Temperature

Maximum Inlet Temperature	°C	25	30	35	40	45	50
	°F	77	86	95	104	113	122
Correction Factor		1.00	1.00	1.00	1.04	1.14	1.37

CFMAT - Correction Factor Maximum Ambient Temperature

Maximum Ambient Temperature	°C	25	30	35	40	45	50
	°F	77	86	95	104	113	122
Correction Factor		1.00	1.00	1.00	1.00	1.00	1.00

CFMIP - Correction Factor Minimum Inlet Pressure

Minimum Inlet Pressure	bar g	4	5	6	7	8	9	10	11	12	13	14	15	16
	psi g	58	73	87	100	116	131	145	160	174	189	203	218	232
Correction Factor		1.60	1.33	1.14	1.00	0.89	0.80	0.73	0.67	0.62	0.57	0.53	0.50	0.47

CFOD - Correction Factor Outlet Dewpoint

Outlet Dewpoint	°C	-20	-40	-70
	°F	-4	-40	-100
Correction Factor		0.91	1.00	2.00

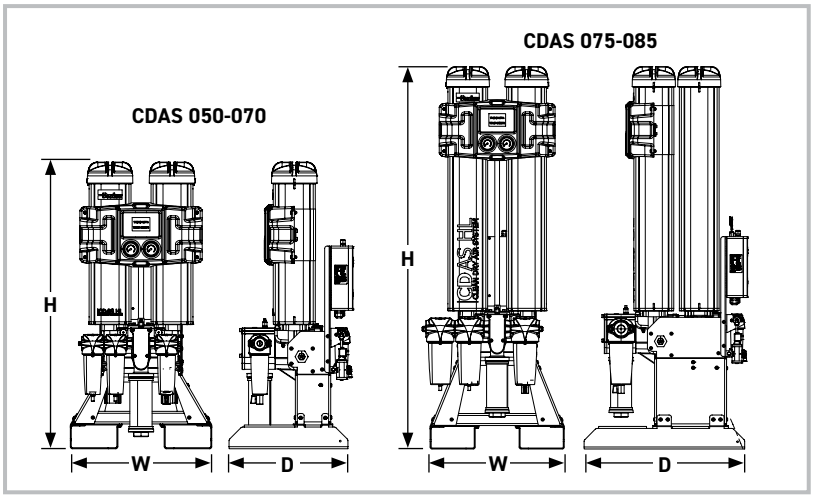

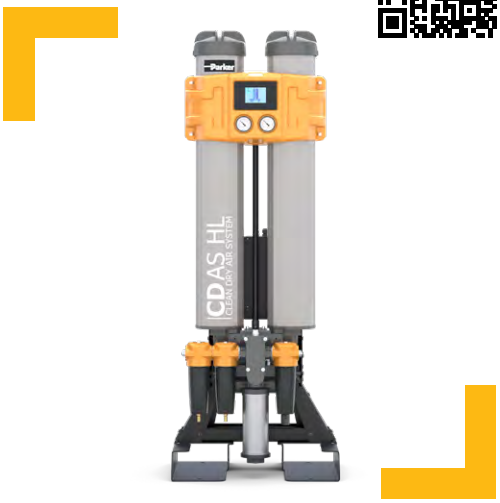

Weights & Dimensions

Model	Dimensions						Weight	
	Height (H)		Width (W)		Depth (D)			
	mm	ins	mm	ins	mm	ins	kg	lbs
CDAS HL 050	1133	45	559	22	490	19	76	168
CDAS HL 055	1313	52	559	22	490	19	84	185
CDAS HL 060	1510	59	559	22	490	19	93	205
CDAS HL 065	1660	65	559	22	490	19	100	220
CDAS HL 070	2020	80	559	22	490	19	120	265
CDAS HL 075	1595	63	559	22	682	27	165	364
CDAS HL 080	1745	69	559	22	682	27	180	397
CDAS HL 085	2105	83	559	22	682	27	210	463

Filtration (Required/Included)

Model	Pipe Size BSPP or NPT	Dryer Inlet			Dryer Outlet		
		Required	Included	Included	Not Included	Included	Not Included
		Liquid Separator	General Purpose Pre-filter	High Efficiency Filter	Oil Vapour Reduction Filter	General Purpose Dry Particulate Filter	High Efficiency Dry Particulate Filter
CDAS HL 050	½"	WSPX015C GT1 X	AOPX015C	AAPX015C	-	AOPX015C	-
CDAS HL 055	½"	WSPX015C GT1 X	AOPX015C	AAPX015C	-	AOPX015C	-
CDAS HL 060	½"	WSPX015C GT1 X	AOPX020C	AAPX020C	-	AOPX020C	-
CDAS HL 065	½"	WSPX015C GT1 X	AOPX020C	AAPX020C	-	AOPX020C	-
CDAS HL 070	¾"	WSPX025D GT1 X	AOPX025D	AAPX025D	-	AOPX025D	-
CDAS HL 075	1"	WSPX025E GT1 X	AOPX025E	AAPX025E	-	AOPX025E	-
CDAS HL 080	1"	WSPX025E GT1 X	AOPX025E	AAPX025E	-	AOPX025E	-
CDAS HL 085	1½"	WSPX030G GT1 X	AOPX030G	AAPX030G	-	AOPX030G	-

Select GT1 for BSPP Threads/Select NT2 for NPT Threads

Parker Catalogue Numbers

Model	-20°C PDP / -40°C PDP BSPP	-70°C PDP BSPP	-20°C PDP / -40°C PDP NPT	-70°C PDP NPT
CDAS HL 50	CDASHL050-40G16AE	CDASHL050-70G16AE	CDASHL050-40N16AE	CDASHL050-70N16AE
CDAS HL 55	CDASHL055-40G16AE	CDASHL055-70G16AE	CDASHL055-40N16AE	CDASHL055-70N16AE
CDAS HL 60	CDASHL060-40G16AE	CDASHL060-70G16AE	CDASHL060-40N16AE	CDASHL060-70N16AE
CDAS HL 65	CDASHL065-40G16AE	CDASHL065-70G16AE	CDASHL065-40N16AE	CDASHL065-70N16AE
CDAS HL 70	CDASHL070-40G16AE	CDASHL070-70G16AE	CDASHL070-40N16AE	CDASHL070-70N16AE
CDAS HL 75	CDASHL075-40G16AE	CDASHL075-70G16AE	CDASHL075-40N16AE	CDASHL075-70N16AE
CDAS HL 80	CDASHL080-40G16AE	CDASHL080-70G16AE	CDASHL080-40N16AE	CDASHL080-70N16AE
CDAS HL 85	CDASHL085-40G16AE	CDASHL085-70G16AE	CDASHL085-40N16AE	CDASHL085-70N16AE

CDAS HL Large Flow Heatless Adsorption Dryers

Dryer Performance

Dryer Models	Dewpoint (Standard)		ISO 8573-1:2010 Classification (Standard)	Dewpoint (Option 1)		ISO 8573-1:2010 Classification (Option 1)	Dewpoint (Option 2)		ISO 8573-1:2010 Classification (Option 2)
	°C	°F		°C	°F		°C	°F	
CDAS HL 100 - 170	-40	-40	Class 2:2:2	-70	-100	Class 2:1:2	-20	-4	Class 2:3:2

ISO 8573-1 Classifications when used with Parker OIL-X pre/post filtration.

Technical Data

Dryer Models	Minimum Operating Pressure		Maximum Operating Pressure		Minimum Operating Temperature		Maximum Operating Temperature		Maximum Ambient Temperature		Electrical Supply (Standard)	Electrical Supply (Optional)	Thread Type	Noise Level
	bar g	psi g	bar g	psi g	°C	°F	°C	°F	°C	°F				dB(A)
CDAS HL 100 - 170	5	73	13	190	5	41	50	122	55	131	100-240V +/-10% 1ph 50/60Hz	-	BSPP	<75

Flow Rates

Model	Pipe Size	Inlet Flow Rate			
		L/s	m³/min	m³/hr	cfm
CDAS HL 100	2"	113	6.81	408	240
CDAS HL 110	2"	170	10.22	612	360
CDAS HL 120	2½"	213	12.75	765	450
CDAS HL 130	2½"	283	17	1020	600
CDAS HL 140	2½"	354	21	1275	750
CDAS HL 150	2½"	425	26	1530	900
CDAS HL 160	3"	496	30	1785	1050
CDAS HL 170	3"	567	34	2040	1200
2 x CDAS HL 140	2½"	708	43	2550	1500
2 x CDAS HL 150	2½"	850	51	3060	1800
2 x CDAS HL 160	3"	992	60	3570	2100
2 x CDAS HL 170	3"	1133	68	4080	2400
3 x CDAS HL 150	2½"	1275	77	4590	2700
3 x CDAS HL 160	3"	1488	89	5355	3150
3 x CDAS HL 170	3"	1700	102	6120	3600

Stated flows are for operation at 7 bar (g) (102 psi g) with reference to 20°C, 1 bar (a), 0% relative water vapour pressure. For flows at other pressures, apply the correction factors shown below.

Product Selection and Correction Factors

For correct operation, compressed air dryers must be sized for the maximum (summer) inlet temperature, maximum (summer) ambient temperature, minimum inlet pressure, required outlet dewpoint and maximum flow rate of the installation.

CFMIT - Correction Factor Maximum Inlet Temperature

Maximum Inlet Temperature	°C	25	30	35	40	45	50
	°F	77	86	95	104	113	122
Correction Factor		1.00	1.00	1.00	1.04	1.14	1.37

To select a dryer, first calculate the Minimum Drying Capacity (MDC) using the formula below then select a dryer from the flow rate table above with a flow rate equal to or above the MDC.

Minimum Drying Capacity (MDC) =

Max System Flow x CFMIT x CFMAT x CFMIP x CFOD

CFMAT - Correction Factor Maximum Ambient Temperature

Maximum Ambient Temperature	°C	25	30	35	40	45	50
	°F	77	86	95	104	113	122
Correction Factor		1.00	1.00	1.00	1.00	1.00	1.00

CFMIP - Correction Factor Minimum Inlet Pressure

Minimum Inlet Pressure	bar g	5	6	7	8	9	10	11	12	13
	psi g	73	87	100	116	131	145	160	174	189
Correction Factor		1.33	1.14	1.00	0.89	0.80	0.73	0.67	0.62	0.57

CFOD - Correction Factor Outlet Dewpoint

Outlet Dewpoint	°C	-20	-40	-70
	°F	-4	-40	-100
Correction Factor		0.91	1.00	1.43

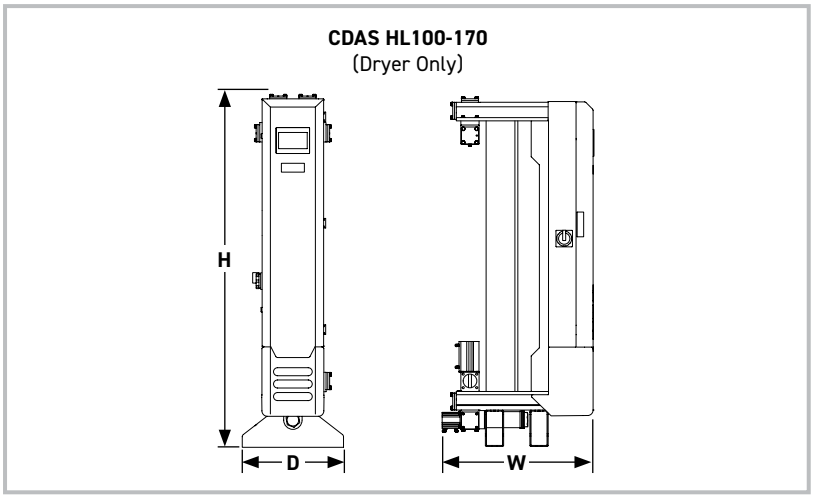

Weights & Dimensions (Dryer Only)

Model	Dimensions						Weight	
	Height (H)		Width (W)		Depth (D)			
	mm	ins	mm	ins	mm	ins	kg	lbs
CDAS HL 100	1672	65.8	816	32.1	550	21.7	217	478
CDAS HL 110	1672	65.8	987	38.9	550	21.7	277	611
CDAS HL 120	1917	75.5	987	38.9	550	21.7	372	820
CDAS HL 130	1917	75.5	1156	45.5	550	21.7	464	1023
CDAS HL 140	1917	75.5	1325	52.2	550	21.7	555	1224
CDAS HL 150	1917	75.5	1494	58.8	550	21.7	646	1424
CDAS HL 160	1917	75.5	1663	65.5	550	21.7	739	1629
CDAS HL 170	1917	75.5	1832	72.1	550	21.7	830	1830

Filtration (Included)

Model	Pipe Size BSPP	Dryer Inlet			Dryer Outlet		
		Included	Included	Included	Not Included	Included	Not Included
		Liquid Separator	General Purpose Pre-filter	High Efficiency Filter	Oil Vapour Reduction Filter	General Purpose Dry Particulate Filter	High Efficiency Dry Particulate Filter
CDAS HL 100	2"	WSPX040HGT1X	AOPX040HGFX	AAPX040HGFX	-	AOPX040HGFX	-
CDAS HL 110	2"	WSPX040HGT1X	AOPX040HGFX	AAPX040HGFX	-	AOPX040HGFX	-
CDAS HL 120	2½"	WSPX045IGT1X	AOPX045IGFX	AAPX045IGFX	-	AOPX045IGFX	-
CDAS HL 130	2½"	WSPX045IGT1X	AOPX045IGFX	AAPX045IGFX	-	AOPX045IGFX	-
CDAS HL 140	2½"	WSPX050IGT1X	AOPX050IGFX	AAPX050IGFX	-	AOPX050IGFX	-
CDAS HL 150	2½"	WSPX050IGT1X	AOPX050IGFX	AAPX050IGFX	-	AOPX050IGFX	-
CDAS HL 160	3"	WSPX055JGT1X	AOPX055JGFX	AAPX055JGFX	-	AOPX055JGFX	-
CDAS HL 170	3"	WSPX055JGT1X	AOPX055JGFX	AAPX055JGFX	-	AOPX055JGFX	-

Parker Catalogue Numbers

Model	-20°C PDP / -40°C PDP	-70°C PDP
CDAS HL 100	CDASHL100-40G13BC	CDASHL100-70G13BC
CDAS HL 110	CDASHL110-40G13BC	CDASHL110-70G13BC
CDAS HL 120	CDASHL120-40G13BC	CDASHL120-70G13BC
CDAS HL 130	CDASHL130-40G13BC	CDASHL130-70G13BC
CDAS HL 140	CDASHL140-40G13BC	CDASHL140-70G13BC
CDAS HL 150	CDASHL150-40G13BC	CDASHL150-70G13BC
CDAS HL 160	CDASHL160-40G13BC	CDASHL160-70G13BC
CDAS HL 170	CDASHL170-40G13BC	CDASHL170-70G13BC

CDAS LE Large Flow Low Energy Heatless Adsorption Dryers

Dryer Performance

Dryer Models	Dewpoint (Standard)		ISO 8573-1:2010 Classification (Standard)	Dewpoint (Option 1)		ISO 8573-1:2010 Classification (Option 1)	Dewpoint (Option 2)		ISO 8573-1:2010 Classification (Option 2)
	°C	°F		°C	°F		°C	°F	
CDAS LE 100 - 170	-40	-40	Class 2:2:2	-70	-100	Class 2:1:2	-20	-4	Class 2:3:2

ISO 8573-1 Classifications when used with Parker OIL-X pre/post filtration.

Technical Data

Dryer Models	Minimum Operating Pressure		Maximum Operating Pressure		Minimum Operating Temperature		Maximum Operating Temperature		Maximum Ambient Temperature		Electrical Supply (Standard)	Electrical Supply (Optional)	Thread Type	Noise Level
	bar g	psi g	bar g	psi g	°C	°F	°C	°F	°C	°F				dB(A)
CDAS LE 100 - 170	5	73	13	190	5	41	50	122	55	131	400V +/-10% 3ph 50Hz	460V +/-10% 3ph 60Hz	BSPP	<75

Flow Rates

Model	Pipe Size	Inlet Flow Rate			
		L/s	m³/min	m³/hr	cfm
CDAS LE 100	2"	113	6.81	408	240
CDAS LE 110	2"	170	10.22	612	360
CDAS LE 120	2½"	213	12.75	765	450
CDAS LE 130	2½"	283	17	1020	600
CDAS LE 140	2½"	354	21	1275	750
CDAS LE 150	2½"	425	26	1530	900
CDAS LE 160	3"	496	30	1785	1050
CDAS LE 170	3"	567	34	2040	1200
2 x CDAS LE 140	2½"	708	43	2550	1500
2 x CDAS LE 150	2½"	850	51	3060	1800
2 x CDAS LE 160	3"	992	60	3570	2100
2 x CDAS LE 170	3"	1133	68	4080	2400
3 x CDAS LE 150	2½"	1275	77	4590	2700
3 x CDAS LE 160	3"	1488	89	5355	3150
3 x CDAS LE 170	3"	1700	102	6120	3600

Vacuum Pump Part Number and kW

Vacuum Pump 50Hz/60Hz	kW @ 50Hz	kW @ 60Hz
HLVAP-OL-02-100	3	3.6
HLVAP-OL-02-110	3	3.6
HLVAP-OL-02-120	4	4.8
HLVAP-OL-02-130	5.5	6.6
HLVAP-OL-02-140	5.5	6.6
HLVAP-OL-02-150	7	8.4
HLVAP-OL-02-160	8.5	10.2
HLVAP-OL-02-170	9.5	11.4

Dryer and vacuum pump to be ordered separately.

HLVAP-OL-02-100 to HLVAP-OL-02-140 = Single Pump
HLVAP-OL-02-150 to HLVAP-OL-02-170 = Duplex Pump
(Duplex = 2 x pumps supplied on frame)
Multi-bank dryer installations require multiples vacuum pumps.
For example, 3 x CDAS LE 170 requires 3 x HLVAP-OL-02-170 pumps or alternatively consider connection to a centralised vacuum system.

Stated flows are for operation at 7 bar (g) (102 psi g) with reference to 20°C, 1 bar (a), 0% relative water vapour pressure. For flows at other pressures, apply the correction factors shown below.

Product Selection and Correction Factors

For correct operation, compressed air dryers must be sized for the maximum (summer) inlet temperature, maximum (summer) ambient temperature, minimum inlet pressure, required outlet dewpoint and maximum flow rate of the installation.

CFMIT - Correction Factor Maximum Inlet Temperature

Maximum Inlet Temperature	°C	25	30	35	40	45	50
	°F	77	86	95	104	113	122
Correction Factor		1.00	1.00	1.00	1.04	1.14	1.37

CFMAT - Correction Factor Maximum Ambient Temperature

Maximum Ambient Temperature	°C	25	30	35	40	45	50
	°F	77	86	95	104	113	122
Correction Factor		1.00	1.00	1.00	1.00	1.00	1.00

To select a dryer, first calculate the Minimum Drying Capacity (MDC) using the formula below then select a dryer from the flow rate table above with a flow rate equal to or above the MDC.

Minimum Drying Capacity (MDC) =

Max System Flow x CFMIT x CFMAT x CFMIP x CFOD

CFMIP - Correction Factor Minimum Inlet Pressure

Minimum Inlet Pressure	bar g	5	6	7	8	9	10	11	12	13
	psi g	73	87	100	116	131	145	160	174	189
Correction Factor		1.33	1.14	1.00	0.89	0.80	0.73	0.67	0.62	0.57

CFOD - Correction Factor Outlet Dewpoint

Outlet Dewpoint	°C	-20	-40	-70
	°F	-4	-40	-100
Correction Factor		0.91	1.00	1.43

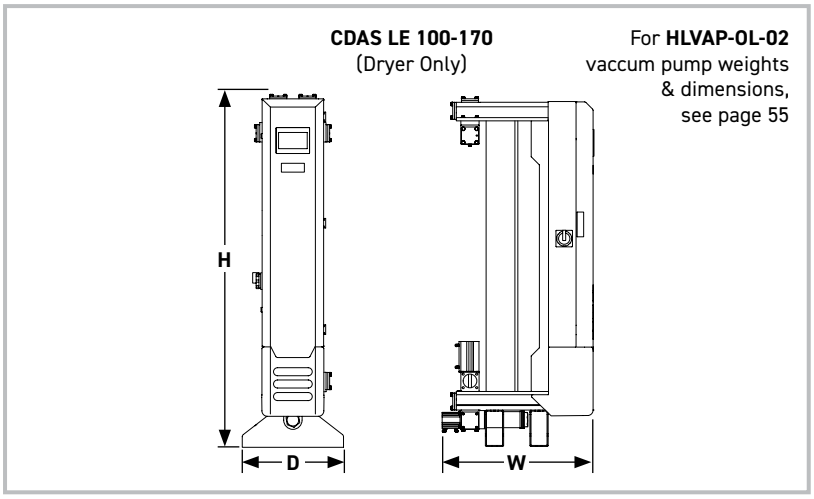

Weights & Dimensions (Dryer Only)

Model	Dimensions						Weight	
	Height (H)		Width (W)		Depth (D)			
	mm	ins	mm	ins	mm	ins	kg	lbs
CDAS LE 100	1672	65.8	816	32.1	550	21.7	217	478
CDAS LE 110	1672	65.8	987	38.9	550	21.7	277	611
CDAS LE 120	1917	75.5	987	38.9	550	21.7	372	820
CDAS LE 130	1917	75.5	1156	45.5	550	21.7	464	1023
CDAS LE 140	1917	75.5	1325	52.2	550	21.7	555	1224
CDAS LE 150	1917	75.5	1494	58.8	550	21.7	646	1424
CDAS LE 160	1917	75.5	1663	65.5	550	21.7	739	1629
CDAS LE 170	1917	75.5	1832	72.1	550	21.7	830	1830

Filtration (Included)

Model	Pipe Size BSPP	Dryer Inlet			Dryer Outlet		
		Included	Included	Included	Not Included	Included	Not Included
		Liquid Separator	General Purpose Pre-filter	High Efficiency Filter	Oil Vapour Reduction Filter	General Purpose Dry Particulate Filter	High Efficiency Dry Particulate Filter
CDAS LE 100	2"	WSPX040HGT1X	AOPX040HGFX	AAPX040HGFX	-	AOPX040HGFX	-
CDAS LE 110	2"	WSPX040HGT1X	AOPX040HGFX	AAPX040HGFX	-	AOPX040HGFX	-
CDAS LE 120	2½"	WSPX045IGT1X	AOPX045IGFX	AAPX045IGFX	-	AOPX045IGFX	-
CDAS LE 130	2½"	WSPX045IGT1X	AOPX045IGFX	AAPX045IGFX	-	AOPX045IGFX	-
CDAS LE 140	2½"	WSPX050IGT1X	AOPX050IGFX	AAPX050IGFX	-	AOPX050IGFX	-
CDAS LE 150	2½"	WSPX050IGT1X	AOPX050IGFX	AAPX050IGFX	-	AOPX050IGFX	-
CDAS LE 160	3"	WSPX055JGT1X	AOPX055JGFX	AAPX055JGFX	-	AOPX055JGFX	-
CDAS LE 170	3"	WSPX055JGT1X	AOPX055JGFX	AAPX055JGFX	-	AOPX055JGFX	-

Parker Catalogue Numbers

Model	-20°C PDP / -40°C PDP	-70°C PDP
CDAS LE 100	CDASLE100-40G13BC	CDASLE100-70G13BC
CDAS LE 110	CDASLE110-40G13BC	CDASLE110-70G13BC
CDAS LE 120	CDASLE120-40G13BC	CDASLE120-70G13BC
CDAS LE 130	CDASLE130-40G13BC	CDASLE130-70G13BC
CDAS LE 140	CDASLE140-40G13BC	CDASLE140-70G13BC
CDAS LE 150	CDASLE150-40G13BC	CDASLE150-70G13BC
CDAS LE 160	CDASLE160-40G13BC	CDASLE160-70G13BC
CDAS LE 170	CDASLE170-40G13BC	CDASLE170-70G13BC

OFAS HL Medium Flow Heatless Adsorption Dryers

Dryer Performance

Dryer Models	Dewpoint (Standard)		ISO8573-1:2010 Classification (Standard)	Dewpoint (Option 1)		ISO8573-1:2010 Classification (Option 1)	Dewpoint (Option 2)		ISO8573-1:2010 Classification (Option 2)
	°C	°F		°C	°F		°C	°F	
OFAS HL 050 - 085	-40	-40	Class 2.2.0	-70	-100	Class 2.1.0	-20	-4	Class 2.3.0

ISO8573-1 Classifications when used with OIL-X pre/post filtration.

Technical Data

Dryer Models	Minimum Operating Pressure		Maximum Operating Pressure		Minimum Operating Temperature		Maximum Operating Temperature		Maximum Ambient Temperature		Electrical Supply (Standard)	Electrical Supply (Optional)	Thread Type	Noise Level
	bar g	psi g	bar g	psi g	°C	°F	°C	°F	°C	°F				dB(A)
OFAS HL 050 - 085	4	58	16	232	5	41	50	122	55	131	100-240V +/-10% 1ph 50/60Hz	24V DC	BSPP or NPT	<75

Flow Rates

Model	Pipe Size	Inlet Flow Rate			
		L/s	m³/min	m³/hr	cfm
OFAS HL 050	½"	15	0.92	55	32
OFAS HL 055	½"	19	1.17	70	41
OFAS HL 060	½"	25	1.50	90	53
OFAS HL 065	½"	31	1.84	110	65
OFAS HL 070	¾"	42	2.51	150	88
OFAS HL 075	1"	51	3.09	185	109
OFAS HL 080	1"	61	3.67	220	129
OFAS HL 085	1½"	83	5.01	300	177

Stated flows are for operation at 7 bar (g) (102 psi g) with reference to 20°C, 1 bar (a), 0% relative water vapour pressure. For flows at other pressures, apply the correction factors shown below.

Product Selection & Correction Factors

For correct operation, compressed air dryers must be sized using for the maximum (summer) inlet temperature, maximum (summer) ambient temperature, minimum inlet pressure, required outlet dewpoint and maximum flow rate of the installation.

To select a dryer, first calculate the MDC (Minimum Drying Capacity) using the formula below then select a dryer from the flow rate table above with a flow rate equal to or above the MDC.

Minimum Drying Capacity = System Flow x CFMIT x CFMAT x CFMIP x CFOD

CFMIT - Correction Factor Maximum Inlet Temperature

Maximum Inlet Temperature	°C	25	30	35	40	45	50
	°F	77	86	95	104	113	122
Correction Factor		1.00	1.00	1.00	1.04	1.14	1.37

CFMAT - Correction Factor Maximum Ambient Temperature

Maximum Ambient Temperature	°C	25	30	35	40	45	50
	°F	77	86	95	104	113	122
Correction Factor		1.00	1.00	1.00	1.00	1.00	1.00

CFMIP - Correction Factor Minimum Inlet Pressure

Minimum Inlet Pressure	bar g	4	5	6	7	8	9	10	11	12	13	14	15	16
	psi g	58	73	87	100	116	131	145	160	174	189	203	218	232
Correction Factor		1.60	1.33	1.14	1.00	0.89	0.80	0.73	0.67	0.62	0.57	0.53	0.50	0.47

CFOD - Correction Factor Outlet Dewpoint

Outlet Dewpoint	°C	-20	-40	-70
	°F	-4	-40	-100
Correction Factor		0.91	1.00	2.00

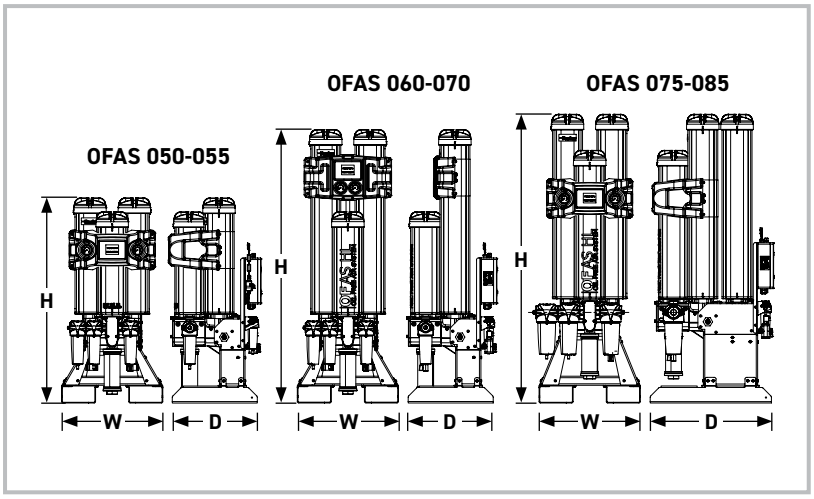

Weights & Dimensions

Model	Dimensions						Weight	
	Height (H)		Width (W)		Depth (D)			
	mm	ins	mm	ins	mm	ins	kg	lbs
OFAS HL 050	1133	45	559	22	512	20.2	90	198
OFAS HL 055	1313	52	559	22	512	20.2	97	214
OFAS HL 060	1510	59	559	22	496	19.5	106	234
OFAS HL 065	1660	65	559	22	496	19.5	112	247
OFAS HL 070	2020	80	559	22	496	19.5	132	291
OFAS HL 075	1595	63	559	22	682	27	184	406
OFAS HL 080	1745	69	559	22	682	27	196	432
OFAS HL 085	2105	83	559	22	682	27	232	511

Filtration (Required/Included)

Model	Pipe Size BSPP or NPT	Dryer Inlet			Dryer Outlet		
		Required	Included	Included	Not Included	Included	Not Included
		Liquid Separator	General Purpose Pre-filter	High Efficiency Filter	Oil Vapour Reduction Filter	General Purpose Dry Particulate Filter	High Efficiency Dry Particulate Filter
OFAS HL 050	½"	WSPX015C GT1 X	AOPX015C	AAPX015C	Integrated	AOPX015C	-
OFAS HL 055	½"	WSPX015C GT1 X	AOPX015C	AAPX015C	Integrated	AOPX015C	-
OFAS HL 060	½"	WSPX015C GT1 X	AOPX020C	AAPX020C	Integrated	AOPX020C	-
OFAS HL 065	½"	WSPX015C GT1 X	AOPX020C	AAPX020C	Integrated	AOPX020C	-
OFAS HL 070	¾"	WSPX025D GT1 X	AOPX025D	AAPX025D	Integrated	AOPX025D	-
OFAS HL 075	1"	WSPX025E GT1 X	AOPX025E	AAPX025E	Integrated	AOPX025E	-
OFAS HL 080	1"	WSPX025E GT1 X	AOPX025E	AAPX025E	Integrated	AOPX025E	-
OFAS HL 085	1½"	WSPX030G GT1 X	AOPX030G	AAPX030G	Integrated	AOPX030G	-

Select GT1 for BSPP Threads/Select NT2 for NPT Threads

Parker Catalogue Numbers

Model	-20°C PDP / -40°C PDP BSPP	-70°C PDP BSPP	-20°C PDP / -40°C PDP NPT	-70°C PDP NPT
OFAS HL 50	OFASHL050-40G16AE	OFASHL050-70G16AE	OFASHL050-40N16AE	OFASHL050-70N16AE
OFAS HL 55	OFASHL055-40G16AE	OFASHL055-70G16AE	OFASHL055-40N16AE	OFASHL055-70N16AE
OFAS HL 60	OFASHL060-40G16AE	OFASHL060-70G16AE	OFASHL060-40N16AE	OFASHL060-70N16AE
OFAS HL 65	OFASHL065-40G16AE	OFASHL065-70G16AE	OFASHL065-40N16AE	OFASHL065-70N16AE
OFAS HL 70	OFASHL070-40G16AE	OFASHL070-70G16AE	OFASHL070-40N16AE	OFASHL070-70N16AE
OFAS HL 75	OFASHL075-40G16AE	OFASHL075-70G16AE	OFASHL075-40N16AE	OFASHL075-70N16AE
OFAS HL 80	OFASHL080-40G16AE	OFASHL080-70G16AE	OFASHL080-40N16AE	OFASHL080-70N16AE
OFAS HL 85	OFASHL085-40G16AE	OFASHL085-70G16AE	OFASHL085-40N16AE	OFASHL085-70N16AE

OFAS HL Large Flow Heatless Adsorption Dryers

Dryer Performance

Dryer Models	Dewpoint (Standard)		ISO 8573-1:2010 Classification (Standard)	Dewpoint (Option 1)		ISO 8573-1:2010 Classification (Option 1)	Dewpoint (Option 2)		ISO 8573-1:2010 Classification (Option 2)
	°C	°F		°C	°F		°C	°F	
OFAS HL 100 - 170	-40	-40	Class 2:2:0	-70	-100	Class 2:1:0	-20	-4	Class 2:3:0

ISO 8573-1 Classifications when used with Parker OIL-X pre/post filtration.

Technical Data

Dryer Models	Minimum Operating Pressure		Maximum Operating Pressure		Minimum Operating Temperature		Maximum Operating Temperature		Maximum Ambient Temperature		Electrical Supply (Standard)	Electrical Supply (Optional)	Thread Type	Noise Level
	bar g	psi g	bar g	psi g	°C	°F	°C	°F	°C	°F				dB(A)
OFAS HL 100 - 170	5	73	13	190	5	41	50	122	55	131	100-240V +/-10% 1ph 50/60Hz	-	BSPP	<75

Flow Rates

Model	Pipe Size	Inlet Flow Rate			
		L/s	m^3/min	m^3/hr	cfm
OFAS HL 100	2"	113	6.81	408	240
OFAS HL 110	2"	170	10.22	612	360
OFAS HL 120	2½"	213	12.75	765	450
OFAS HL 130	2½"	283	17	1020	600
OFAS HL 140	2½"	354	21	1275	750
OFAS HL 150	2½"	425	26	1530	900
OFAS HL 160	3"	496	30	1785	1050
OFAS HL 170	3"	567	34	2040	1200
2 x OFAS HL 140	2½"	708	43	2550	1500
2 x OFAS HL 150	2½"	850	51	3060	1800
2 x OFAS HL 160	3"	992	60	3570	2100
2 x OFAS HL 170	3"	1133	68	4080	2400
3 x OFAS HL 150	2½"	1275	77	4590	2700
3 x OFAS HL 160	3"	1488	89	5355	3150
3 x OFAS HL 170	3"	1700	102	6120	3600

Stated flows are for operation at 7 bar (g) (102 psi g) with reference to 20°C, 1 bar (a), 0% relative water vapour pressure. For flows at other pressures, apply the correction factors shown below.

Product Selection and Correction Factors

For correct operation, compressed air dryers must be sized for the maximum (summer) inlet temperature, maximum (summer) ambient temperature, minimum inlet pressure, required outlet dewpoint and maximum flow rate of the installation.

CFMIT - Correction Factor Maximum Inlet Temperature

Maximum Inlet Temperature	°C	25	30	35	40	45	50
	°F	77	86	95	104	113	122
Correction Factor		1.00	1.00	1.00	1.04	1.14	1.37

To select a dryer, first calculate the Minimum Drying Capacity (MDC) using the formula below then select a dryer from the flow rate table above with a flow rate equal to or above the MDC.

Minimum Drying Capacity (MDC) =

Max System Flow x CFMIT x CFMAT x CFMIP x CFOD

CFMAT - Correction Factor Maximum Ambient Temperature

Maximum Ambient Temperature	°C	25	30	35	40	45	50
	°F	77	86	95	104	113	122
Correction Factor		1.00	1.00	1.00	1.00	1.00	1.00

CFMIP - Correction Factor Minimum Inlet Pressure

Minimum Inlet Pressure	bar g	5	6	7	8	9	10	11	12	13
	psi g	73	87	100	116	131	145	160	174	189
Correction Factor		1.33	1.14	1.00	0.89	0.80	0.73	0.67	0.62	0.57

CFOD - Correction Factor Outlet Dewpoint

Outlet Dewpoint	°C	-20	-40	-70
	°F	-4	-40	-100
Correction Factor		0.91	1.00	1.43

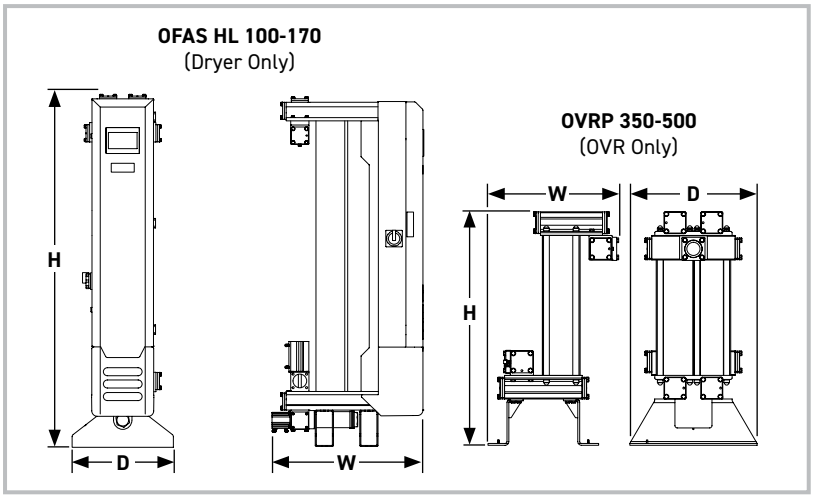

Weights & Dimensions

Model	Dimensions (Dryer Only)						Weight (Dryer Only)	
	Height (H)		Width (W)		Depth (D)			
	mm	ins	mm	ins	mm	ins	kg	lbs
OFAS HL 100	1672	65.8	816	32.1	550	21.7	217	478
OFAS HL 110	1672	65.8	987	38.9	550	21.7	277	611
OFAS HL 120	1917	75.5	987	38.9	550	21.7	372	820
OFAS HL 130	1917	75.5	1156	45.5	550	21.7	464	1023
OFAS HL 140	1917	75.5	1325	52.2	550	21.7	555	1224
OFAS HL 150	1917	75.5	1494	58.8	550	21.7	646	1424
OFAS HL 160	1917	75.5	1663	65.5	550	21.7	739	1629
OFAS HL 170	1917	75.5	1832	72.1	550	21.7	830	1830

Model	Dimensions (OVR Only)						Weight (OVR Only)	
	Height (H)		Width (W)		Depth (D)			
	mm	ins	mm	ins	mm	ins	kg	lbs
OVRP350H	1062	41.8	538	21.2	550	21.7	67	147
OVRP400H	1062	41.8	682	26.9	550	21.7	93	205
OVRP400I	1062	41.8	682	26.9	550	21.7	93	205
OVRP450I	1062	41.8	836	32.9	550	21.7	121	267
OVRP500J	1062	41.8	1005	39.6	550	21.7	144	318

Filtration (Included)

Model	Pipe Size BSPP	Dryer Inlet			Dryer Outlet		
		Included	Included	Included	Included	Included	Not Included
		Liquid Separator	General Purpose Pre-filter	High Efficiency Filter	Oil Vapour Reduction Filter	General Purpose Dry Particulate Filter	High Efficiency Dry Particulate Filter
OFAS HL 100	2"	WSPX040HGT1X	AOPX040HGFX	AAPX040HGFX	OVRP350HGXX	AOPX040HGMX	-
OFAS HL 110	2"	WSPX040HGT1X	AOPX040HGFX	AAPX040HGFX	OVRP400HGXX	AOPX040HGMX	-
OFAS HL 120	2½"	WSPX045IGT1X	AOPX045IGFX	AAPX045IGFX	OVRP400IGXX	AOPX045IGMX	-
OFAS HL 130	2½"	WSPX045IGT1X	AOPX045IGFX	AAPX045IGFX	OVRP400IGXX	AOPX045IGMX	-
OFAS HL 140	2½"	WSPX050IGT1X	AOPX050IGFX	AAPX050IGFX	OVRP450IGXX	AOPX050IGMX	-
OFAS HL 150	2½"	WSPX050IGT1X	AOPX050IGFX	AAPX050IGFX	OVRP450IGXX	AOPX050IGMX	-
OFAS HL 160	3"	WSPX055JGT1X	AOPX055JGFX	AAPX055JGFX	OVRP500JGXX	AOPX055JGMX	-
OFAS HL 170	3"	WSPX055JGT1X	AOPX055JGFX	AAPX055JGFX	OVRP500JGXX	AOPX055JGMX	-

Parker Catalogue Numbers

Model	-20°C PDP / -40°C PDP	-70°C PDP
OFAS HL 100	OFASHL100-40G13BC	OFASHL100-70G13BC
OFAS HL 110	OFASHL110-40G13BC	OFASHL110-70G13BC
OFAS HL 120	OFASHL120-40G13BC	OFASHL120-70G13BC
OFAS HL 130	OFASHL130-40G13BC	OFASHL130-70G13BC
OFAS HL 140	OFASHL140-40G13BC	OFASHL140-70G13BC
OFAS HL 150	OFASHL150-40G13BC	OFASHL150-70G13BC
OFAS HL 160	OFASHL160-40G13BC	OFASHL160-70G13BC
OFAS HL 170	OFASHL170-40G13BC	OFASHL170-70G13BC

OFAS LE Large Low Energy Flow Heatless Adsorption Dryers

Dryer Performance

Dryer Models	Dewpoint (Standard)		ISO 8573-1:2010 Classification (Standard)	Dewpoint (Option 1)		ISO 8573-1:2010 Classification (Option 1)	Dewpoint (Option 2)		ISO 8573-1:2010 Classification (Option 2)
	°C	°F		°C	°F		°C	°F	
OFAS LE 100 - 170	-40	-40	Class 2:2:0	-70	-100	Class 2:1:0	-20	-4	Class 2:3:0

ISO 8573-1 Classifications when used with Parker OIL-X pre/post filtration.

Technical Data

Dryer Models	Minimum Operating Pressure		Maximum Operating Pressure		Minimum Operating Temperature		Maximum Operating Temperature		Maximum Ambient Temperature		Electrical Supply (Standard)	Electrical Supply (Optional)	Thread Type	Noise Level
	bar g	psi g	bar g	psi g	°C	°F	°C	°F	°C	°F				dB(A)
OFAS LE 100 - 170	5	73	13	190	5	41	50	122	55	131	400V +/-10% 3ph 50Hz	460V +/-10% 3ph 60Hz	BSPP	<75

Flow Rates

Model	Pipe Size	Inlet Flow Rate			
		L/s	m³/min	m³/hr	cfm
OFAS LE 100	2"	113	6.81	408	240
OFAS LE 110	2"	170	10.22	612	360
OFAS LE 120	2½"	213	12.75	765	450
OFAS LE 130	2½"	283	17	1020	600
OFAS LE 140	2½"	354	21	1275	750
OFAS LE 150	2½"	425	26	1530	900
OFAS LE 160	3"	496	30	1785	1050
OFAS LE 170	3"	567	34	2040	1200
2 x OFAS LE 140	2½"	708	43	2550	1500
2 x OFAS LE 150	2½"	850	51	3060	1800
2 x OFAS LE 160	3"	992	60	3570	2100
2 x OFAS LE 170	3"	1133	68	4080	2400
3 x OFAS LE 150	2½"	1275	77	4590	2700
3 x OFAS LE 160	3"	1488	89	5355	3150
3 x OFAS LE 170	3"	1700	102	6120	3600

Vacuum Pump Part Number and kW

Vacuum Pump 50Hz/60Hz	kW @ 50Hz	kW @ 60Hz
HLVAP-OL-02-100	3	3.6
HLVAP-OL-02-110	3	3.6
HLVAP-OL-02-120	4	4.8
HLVAP-OL-02-130	5.5	6.6
HLVAP-OL-02-140	5.5	6.6
HLVAP-OL-02-150	7	8.4
HLVAP-OL-02-160	8.5	10.2
HLVAP-OL-02-170	9.5	11.4

Dryer and vacuum pump to be ordered separately.

HLVAP-OL-02-100 to HLVAP-OL-02-140 = Single Pump
HLVAP-OL-02-150 to HLVAP-OL-02-170 = Duplex Pump
(Duplex = 2 x pumps supplied on frame)
Multi-bank dryer installations require multiples vacuum pumps.
For example, 3 x OFAS LE 170 requires 3 x HLVAP-OL-02-170 pumps or alternatively consider connection to a centralised vacuum system.

Stated flows are for operation at 7 bar (g) (102 psi g) with reference to 20°C, 1 bar (a), 0% relative water vapour pressure. For flows at other pressures, apply the correction factors shown below.

Product Selection & Correction Factors

For correct operation, compressed air dryers must be sized for the maximum (summer) inlet temperature, maximum (summer) ambient temperature, minimum inlet pressure, required outlet dewpoint and maximum flow rate of the installation.

CFMIT - Correction Factor Maximum Inlet Temperature

Maximum Inlet Temperature	°C	25	30	35	40	45	50
	°F	77	86	95	104	113	122
Correction Factor		1.00	1.00	1.00	1.04	1.14	1.37

To select a dryer, first calculate the Minimum Drying Capacity (MDC) using the formula below then select a dryer from the flow rate table above with a flow rate equal to or above the MDC.

Minimum Drying Capacity (MDC) =

Max System Flow x CFMIT x CFMAT x CFMIP x CFOD

CFMAT - Correction Factor Maximum Ambient Temperature

Maximum Ambient Temperature	°C	25	30	35	40	45	50
	°F	77	86	95	104	113	122
Correction Factor		1.00	1.00	1.00	1.00	1.00	1.00

CFMIP - Correction Factor Minimum Inlet Pressure

Minimum Inlet Pressure	bar g	5	6	7	8	9	10	11	12	13
	psi g	73	87	100	116	131	145	160	174	189
Correction Factor		1.33	1.14	1.00	0.89	0.80	0.73	0.67	0.62	0.57

CFOD - Correction Factor Outlet Dewpoint

Outlet Dewpoint	°C	-20	-40	-70
	°F	-4	-40	-100
Correction Factor		0.91	1.00	1.43

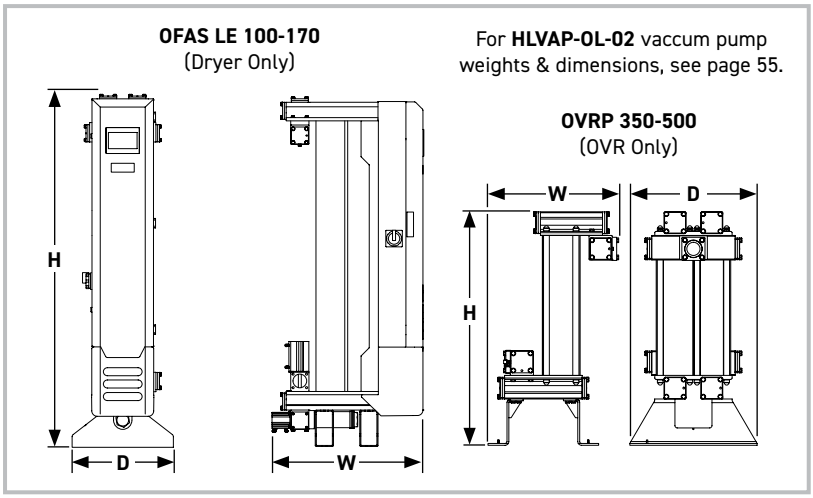

Weights & Dimensions

Model	Dimensions (Dryer Only)						Weight (Dryer Only)	
	Height (H)		Width (W)		Depth (D)			
	mm	ins	mm	ins	mm	ins	kg	lbs
OFAS LE 100	1672	65.8	816	32.1	550	21.7	217	478
OFAS LE 110	1672	65.8	987	38.9	550	21.7	277	611
OFAS LE 120	1917	75.5	987	38.9	550	21.7	372	820
OFAS LE 130	1917	75.5	1156	45.5	550	21.7	464	1023
OFAS LE 140	1917	75.5	1325	52.2	550	21.7	555	1224
OFAS LE 150	1917	75.5	1494	58.8	550	21.7	646	1424
OFAS LE 160	1917	75.5	1663	65.5	550	21.7	739	1629
OFAS LE 170	1917	75.5	1832	72.1	550	21.7	830	1830

Model	Dimensions (OVR Only)						Weight (OVR Only)	
	Height (H)		Width (W)		Depth (D)			
	mm	ins	mm	ins	mm	ins	kg	lbs
OVRP350H	1062	41.8	538	21.2	550	21.7	67	147
OVRP400H	1062	41.8	682	26.9	550	21.7	93	205
OVRP400I	1062	41.8	682	26.9	550	21.7	93	205
OVRP450I	1062	41.8	836	32.9	550	21.7	121	267
OVRP500J	1062	41.8	1005	39.6	550	21.7	144	318

Filtration (Included)

Model	Pipe Size BSPP	Dryer Inlet			Dryer Outlet		
		Included	Included	Included	Included	Included	Not Included
		Liquid Separator	General Purpose Pre-filter	High Efficiency Filter	Oil Vapour Reduction Filter	General Purpose Dry Particulate Filter	High Efficiency Dry Particulate Filter
OFAS LE 100	2"	WSPX040HGT1X	AOPX040HGFX	AAPX040HGFX	OVRP350HGXX	AOPX040HGMX	-
OFAS LE 110	2"	WSPX040HGT1X	AOPX040HGFX	AAPX040HGFX	OVRP400HGXX	AOPX040HGMX	-
OFAS LE 120	2½"	WSPX045IGT1X	AOPX045IGFX	AAPX045IGFX	OVRP400IGXX	AOPX045IGMX	-
OFAS LE 130	2½"	WSPX045IGT1X	AOPX045IGFX	AAPX045IGFX	OVRP400IGXX	AOPX045IGMX	-
OFAS LE 140	2½"	WSPX050IGT1X	AOPX050IGFX	AAPX050IGFX	OVRP450IGXX	AOPX050IGMX	-
OFAS LE 150	2½"	WSPX050IGT1X	AOPX050IGFX	AAPX050IGFX	OVRP450IGXX	AOPX050IGMX	-
OFAS LE 160	3"	WSPX055JGT1X	AOPX055JGFX	AAPX055JGFX	OVRP500JGXX	AOPX055JGMX	-
OFAS LE 170	3"	WSPX055JGT1X	AOPX055JGFX	AAPX055JGFX	OVRP500JGXX	AOPX055JGMX	-

Parker Catalogue Numbers

Model	-20°C PDP / -40°C PDP	-70°C PDP
OFAS LE 100	OFASLE100-40G13BC	OFASLE100-70G13BC
OFAS LE 110	OFASLE110-40G13BC	OFASLE110-70G13BC
OFAS LE 120	OFASLE120-40G13BC	OFASLE120-70G13BC
OFAS LE 130	OFASLE130-40G13BC	OFASLE130-70G13BC
OFAS LE 140	OFASLE140-40G13BC	OFASLE140-70G13BC
OFAS LE 150	OFASLE150-40G13BC	OFASLE150-70G13BC
OFAS LE 160	OFASLE160-40G13BC	OFASLE160-70G13BC
OFAS LE 170	OFASLE170-40G13BC	OFASLE170-70G13BC

FBP Medium Flow Heatless Adsorption Dryers

Dryer Performance

Dryer Models	Dewpoint (Standard)		ISO8573-1:2010 Classification (Standard)	Dewpoint (Option 1)		ISO8573-1:2010 Classification (Option 1)
	°C	°F		°C	°F	
FBP HL 050 - 085	-40	-40	Class 1.2.0	-70	-100	Class 1.1.0

ISO8573-1 Classifications when used with OIL-X pre/post filtration.

Technical Data

Dryer Models	Minimum Operating Pressure		Maximum Operating Pressure		Minimum Operating Temperature		Maximum Operating Temperature		Maximum Ambient Temperature		Electrical Supply (Standard)	Electrical Supply (Optional)	Thread Type	Noise Level
	bar g	psi g	bar g	psi g	°C	°F	°C	°F	°C	°F				dB(A)
FBP HL 050 - 085	4	58	16	232	5	41	50	122	55	131	100-240V +/-10% 1ph 50/60Hz	24V DC	BSPP or NPT	<75

Flow Rates

Model	Pipe Size	Inlet Flow Rate			
		L/s	m^3/min	m^3/hr	cfm
FBP HL 050	½"	15	0.92	55	32
FBP HL 055	½"	19	1.17	70	41
FBP HL 060	½"	25	1.50	90	53
FBP HL 065	½"	31	1.84	110	65
FBP HL 070	¾"	42	2.51	150	88
FBP HL 075	1"	51	3.09	185	109
FBP HL 080	1"	61	3.67	220	129
FBP HL 085	1½"	83	5.01	300	177

Stated flows are for operation at 7 bar (g) (102 psi g) with reference to 20°C, 1 bar (a), 0% relative water vapour pressure. For flows at other pressures, apply the correction factors shown below.

Product Selection & Correction Factors

For correct operation, compressed air dryers must be sized using for the maximum (summer) inlet temperature, maximum (summer) ambient temperature, minimum inlet pressure, required outlet dewpoint and maximum flow rate of the installation.

To select a dryer, first calculate the MDC (Minimum Drying Capacity) using the formula below then select a dryer from the flow rate table above with a flow rate equal to or above the MDC.

Minimum Drying Capacity = System Flow x CFMIT x CFMAT x CFMIP x CFOD

CFMIT - Correction Factor Maximum Inlet Temperature

Maximum Inlet Temperature	°C	25	30	35	40	45	50
	°F	77	86	95	104	113	122
Correction Factor		1.00	1.00	1.00	1.04	1.14	1.37

CFMAT - Correction Factor Maximum Ambient Temperature

Maximum Ambient Temperature	°C	25	30	35	40	45	50
	°F	77	86	95	104	113	122
Correction Factor		1.00	1.00	1.00	1.00	1.00	1.00

CFMIP - Correction Factor Minimum Inlet Pressure

Minimum Inlet Pressure	bar g	4	5	6	7	8	9	10	11	12	13	14	15	16
	psi g	58	73	87	100	116	131	145	160	174	189	203	218	232
Correction Factor		1.60	1.33	1.14	1.00	0.89	0.80	0.73	0.67	0.62	0.57	0.53	0.50	0.47

CFOD - Correction Factor Outlet Dewpoint

Outlet Dewpoint	°C	-40	-70
	°F	-40	-100
Correction Factor		1.00	2.00

Important Note: -20°C outlet dewpoint not available for FBP products as this dewpoint does not inhibit the growth of microorganisms.

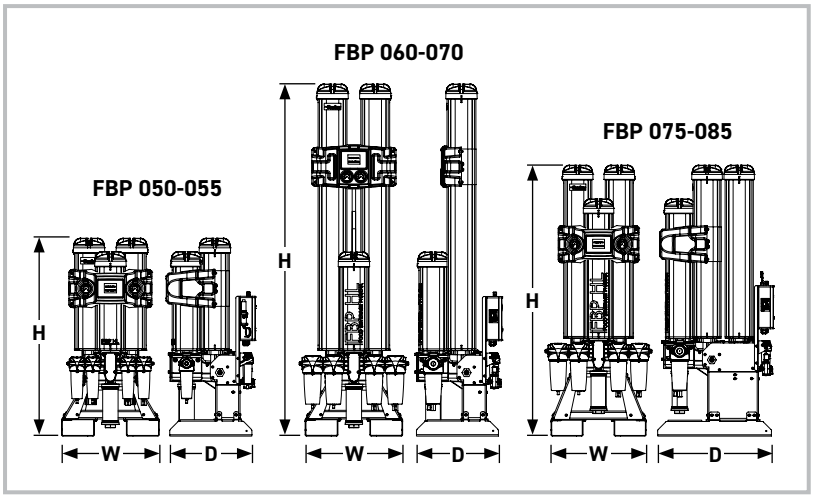

Weights & Dimensions

Model	Dimensions						Weight	
	Height (H)		Width (W)		Depth (D)			
	mm	ins	mm	ins	mm	ins	kg	lbs
FBP HL 050	1133	45	559	22	512	20.2	90	198
FBP HL 055	1313	52	559	22	512	20.2	97	214
FBP HL 060	1510	59	559	22	496	19.5	106	234
FBP HL 065	1660	65	559	22	496	19.5	112	247
FBP HL 070	2020	80	559	22	496	19.5	132	291
FBP HL 075	1595	63	559	22	682	27	184	406
FBP HL 080	1745	69	559	22	682	27	196	432
FBP HL 085	2105	83	559	22	682	27	232	511

Filtration (Required/Included)

Model	Pipe Size BSPP or NPT	Dryer Inlet			Dryer Outlet		
		Required	Included	Included	Not Included	Included	Not Included
		Liquid Separator	General Purpose Pre-filter	High Efficiency Filter	Oil Vapour Reduction Filter	General Purpose Dry Particulate Filter	High Efficiency Dry Particulate Filter
FBP HL 050	½"	WSPX015C GT1 X	AOPX015C	AAPX015C	Integrated	AOPX015C	AAPX015C
FBP HL 055	½"	WSPX015C GT1 X	AOPX015C	AAPX015C	Integrated	AOPX015C	AAPX015C
FBP HL 060	½"	WSPX015C GT1 X	AOPX020C	AAPX020C	Integrated	AOPX020C	AAPX020C
FBP HL 065	½"	WSPX015C GT1 X	AOPX020C	AAPX020C	Integrated	AOPX020C	AAPX020C
FBP HL 070	¾"	WSPX025D GT1 X	AOPX025D	AAPX025D	Integrated	AOPX025D	AAPX025D
FBP HL 075	1"	WSPX025E GT1 X	AOPX025E	AAPX025E	Integrated	AOPX025E	AAPX025E
FBP HL 080	1"	WSPX025E GT1 X	AOPX025E	AAPX025E	Integrated	AOPX025E	AAPX025E
FBP HL 085	1½"	WSPX030G GT1 X	AOPX030G	AAPX030G	Integrated	AOPX030G	AAPX030G

Select GT1 for BSPP Threads/Select NT2 for NPT Threads

Parker Catalogue Numbers

Model	-40°C PDP BSPP	-70°C PDP BSPP	-40°C PDP NPT	-70°C PDP NPT
FBP HL 050	FBPHL050-40G16AE	FBPHL050-70G16AE	FBPHL050-40N16AE	FBPHL050-70N16AE
FBP HL 055	FBPHL055-40G16AE	FBPHL055-70G16AE	FBPHL055-40N16AE	FBPHL055-70N16AE
FBP HL 060	FBPHL060-40G16AE	FBPHL060-70G16AE	FBPHL060-40N16AE	FBPHL060-70N16AE
FBP HL 065	FBPHL065-40G16AE	FBPHL065-70G16AE	FBPHL065-40N16AE	FBPHL065-70N16AE
FBP HL 070	FBPHL070-40G16AE	FBPHL070-70G16AE	FBPHL070-40N16AE	FBPHL070-70N16AE
FBP HL 075	FBPHL075-40G16AE	FBPHL075-70G16AE	FBPHL075-40N16AE	FBPHL075-70N16AE
FBP HL 080	FBPHL080-40G16AE	FBPHL080-70G16AE	FBPHL080-40N16AE	FBPHL080-70N16AE
FBP HL 085	FBPHL085-40G16AE	FBPHL085-70G16AE	FBPHL085-40N16AE	FBPHL085-70N16AE

FBP HL Large Flow Heatless Adsorption Dryers

Dryer Performance

Dryer Models	Dewpoint (Standard)		ISO 8573-1:2010 Classification (Standard)	Dewpoint (Option 1)		ISO 8573-1:2010 Classification (Option 1)
	°C	°F		°C	°F	
FBP HL 100 - 170	-40	-40	Class 1:2:0	-70	-100	Class 1:1:0

ISO 8573-1 Classifications when used with Parker OIL-X pre/post filtration.

Technical Data

Dryer Models	Minimum Operating Pressure		Maximum Operating Pressure		Minimum Operating Temperature		Maximum Operating Temperature		Maximum Ambient Temperature		Electrical Supply (Standard)	Electrical Supply (Optional)	Thread Type	Noise Level
	bar g	psi g	bar g	psi g	°C	°F	°C	°F	°C	°F				dB(A)
FBP HL 100 - 170	5	73	13	190	5	41	50	122	55	131	100-240V +/-10% 1ph 50/60Hz	-	BSPP	<75

Flow Rates

Model	Pipe Size	Inlet Flow Rate			
		L/s	m³/min	m³/hr	cfm
FBP HL 100	2"	113	6.81	408	240
FBP HL 110	2"	170	10.22	612	360
FBP HL 120	2½"	213	12.75	765	450
FBP HL 130	2½"	283	17	1020	600
FBP HL 140	2½"	354	21	1275	750
FBP HL 150	2½"	425	26	1530	900
FBP HL 160	3"	496	30	1785	1050
FBP HL 170	3"	567	34	2040	1200
2 x FBP HL 140	2½"	708	43	2550	1500
2 x FBP HL 150	2½"	850	51	3060	1800
2 x FBP HL 160	3"	992	60	3570	2100
2 x FBP HL 170	3"	1133	68	4080	2400
3 x FBP HL 150	2½"	1275	77	4590	2700
3 x FBP HL 160	3"	1488	89	5355	3150
3 x FBP HL 170	3"	1700	102	6120	3600

Stated flows are for operation at 7 bar (g) (102 psi g) with reference to 20°C, 1 bar (a), 0% relative water vapour pressure. For flows at other pressures, apply the correction factors shown below.

Product Selection and Correction Factors

For correct operation, compressed air dryers must be sized for the maximum (summer) inlet temperature, maximum (summer) ambient temperature, minimum inlet pressure, required outlet dewpoint and maximum flow rate of the installation.

CFMIT - Correction Factor Maximum Inlet Temperature

Maximum Inlet Temperature	°C	25	30	35	40	45	50
	°F	77	86	95	104	113	122
Correction Factor		1.00	1.00	1.00	1.04	1.14	1.37

To select a dryer, first calculate the Minimum Drying Capacity (MDC) using the formula below then select a dryer from the flow rate table above with a flow rate equal to or above the MDC.

Minimum Drying Capacity (MDC) =

Max System Flow x CFMIT x CFMAT x CFMIP x CFOD

CFMAT - Correction Factor Maximum Ambient Temperature

Maximum Ambient Temperature	°C	25	30	35	40	45	50
	°F	77	86	95	104	113	122
Correction Factor		1.00	1.00	1.00	1.00	1.00	1.00

CFMIP - Correction Factor Minimum Inlet Pressure

Minimum Inlet Pressure	bar g	5	6	7	8	9	10	11	12	13
	psi g	73	87	100	116	131	145	160	174	189
Correction Factor		1.33	1.14	1.00	0.89	0.80	0.73	0.67	0.62	0.57

CFOD - Correction Factor Outlet Dewpoint

Outlet Dewpoint	°C	-40	-70
	°F	-40	-100
Correction Factor		1.00	1.43

Important Note: -20°C outlet dewpoint not available for FBP products as this dewpoint does not inhibit the growth of microorganisms.

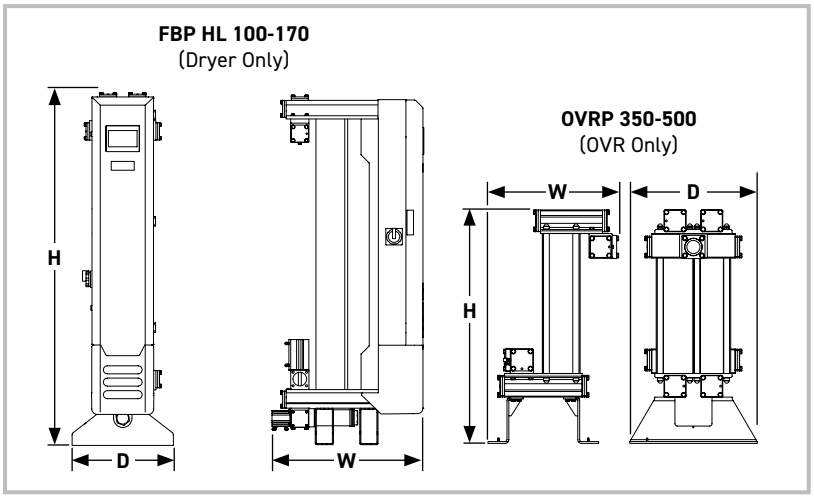

Weights & Dimensions

Model	Dimensions (Dryer Only)						Weight (Dryer Only)	
	Height (H)		Width (W)		Depth (D)			
	mm	ins	mm	ins	mm	ins	kg	lbs
FBP HL 100	1672	65.8	816	32.1	550	21.7	217	478
FBP HL 110	1672	65.8	987	38.9	550	21.7	277	611
FBP HL 120	1917	75.5	987	38.9	550	21.7	372	820
FBP HL 130	1917	75.5	1156	45.5	550	21.7	464	1023
FBP HL 140	1917	75.5	1325	52.2	550	21.7	555	1224
FBP HL 150	1917	75.5	1494	58.8	550	21.7	646	1424
FBP HL 160	1917	75.5	1663	65.5	550	21.7	739	1629
FBP HL 170	1917	75.5	1832	72.1	550	21.7	830	1830

Model	Dimensions (OVR Only)						Weight (OVR Only)	
	Height (H)		Width (W)		Depth (D)			
	mm	ins	mm	ins	mm	ins	kg	lbs
OVRP350H	1062	41.8	538	21.2	550	21.7	67	147
OVRP400H	1062	41.8	682	26.9	550	21.7	93	205
OVRP400I	1062	41.8	682	26.9	550	21.7	93	205
OVRP450I	1062	41.8	836	32.9	550	21.7	121	267
OVRP500J	1062	41.8	1005	39.6	550	21.7	144	318

Filtration (Included)

Model	Pipe Size BSPP	Dryer Inlet			Dryer Outlet		
		Included	Included	Included	Included	Included	Included
		Liquid Separator	General Purpose Pre-filter	High Efficiency Filter	Oil Vapour Reduction Filter	General Purpose Dry Particulate Filter	High Efficiency Dry Particulate Filter
FBP HL 100	2"	WSPX040HGT1X	AOPX040HGFX	AAPX040HGFX	OVRP350HGXX	AOPX040HGFX	AAPX040HGFX
FBP HL 110	2"	WSPX040HGT1X	AOPX040HGFX	AAPX040HGFX	OVRP400HGXX	AOPX040HGFX	AAPX040HGFX
FBP HL 120	2½"	WSPX045IGT1X	AOPX045IGFX	AAPX045IGFX	OVRP400IGXX	AOPX045IGFX	AAPX045IGFX
FBP HL 130	2½"	WSPX045IGT1X	AOPX045IGFX	AAPX045IGFX	OVRP400IGXX	AOPX045IGFX	AAPX045IGFX
FBP HL 140	2½"	WSPX050IGT1X	AOPX050IGFX	AAPX050IGFX	OVRP450IGXX	AOPX050IGFX	AAPX050IGFX
FBP HL 150	2½"	WSPX050IGT1X	AOPX050IGFX	AAPX050IGFX	OVRP450IGXX	AOPX050IGFX	AAPX050IGFX
FBP HL 160	3"	WSPX055JGT1X	AOPX055JGFX	AAPX055JGFX	OVRP500JGXX	AOPX055JGFX	AAPX055JGFX
FBP HL 170	3"	WSPX055JGT1X	AOPX055JGFX	AAPX055JGFX	OVRP500JGXX	AOPX055JGFX	AAPX055JGFX

Parker Catalogue Numbers

Model	-40°C PDP	-70°C PDP
FBP HL 100	FBPHL100-40G13BC	FBPHL100-70G13BC
FBP HL 110	FBPHL110-40G13BC	FBPHL110-70G13BC
FBP HL 120	FBPHL120-40G13BC	FBPHL120-70G13BC
FBP HL 130	FBPHL130-40G13BC	FBPHL130-70G13BC
FBP HL 140	FBPHL140-40G13BC	FBPHL140-70G13BC
FBP HL 150	FBPHL150-40G13BC	FBPHL150-70G13BC
FBP HL 160	FBPHL160-40G13BC	FBPHL160-70G13BC
FBP HL 170	FBPHL170-40G13BC	FBPHL170-70G13BC

FBP LE Large Flow Heatless Adsorption Dryers

Dryer Performance

Dryer Models	Dewpoint (Standard)		ISO 8573-1:2010 Classification (Standard)	Dewpoint (Option 1)		ISO 8573-1:2010 Classification (Option 1)
	°C	°F		°C	°F	
FBP LE 100 - 170	-40	-40	Class 1:2:0	-70	-100	Class 1:1:0

ISO 8573-1 Classifications when used with Parker OIL-X pre/post filtration.

Technical Data

Dryer Models	Minimum Operating Pressure		Maximum Operating Pressure		Minimum Operating Temperature		Maximum Operating Temperature		Maximum Ambient Temperature		Electrical Supply (Standard)	Electrical Supply (Optional)	Thread Type	Noise Level
	bar g	psi g	bar g	psi g	°C	°F	°C	°F	°C	°F				dB(A)
FBP LE 100 - 170	5	73	13	190	5	41	50	122	55	131	400V +/-10% 3ph 50Hz	460V +/-10% 3ph 60Hz	BSPP	<75

Flow Rates

Model	Pipe Size	Inlet Flow Rate			
		L/s	m³/min	m³/hr	cfm
FBP LE 100	2"	113	6.81	408	240
FBP LE 110	2"	170	10.22	612	360
FBP LE 120	2½"	213	12.75	765	450
FBP LE 130	2½"	283	17	1020	600
FBP LE 140	2½"	354	21	1275	750
FBP LE 150	2½"	425	26	1530	900
FBP LE 160	3"	496	30	1785	1050
FBP LE 170	3"	567	34	2040	1200
2 x FBP LE 140	2½"	708	43	2550	1500
2 x FBP LE 150	2½"	850	51	3060	1800
2 x FBP LE 160	3"	992	60	3570	2100
2 x FBP LE 170	3"	1133	68	4080	2400
3 x FBP LE 150	2½"	1275	77	4590	2700
3 x FBP LE 160	3"	1488	89	5355	3150
3 x FBP LE 170	3"	1700	102	6120	3600

Vacuum Pump Part Number and kW

Vacuum Pump 50Hz/60Hz	kW @ 50Hz	kW @ 60Hz
HLVAP-OL-02-100	3	3.6
HLVAP-OL-02-110	3	3.6
HLVAP-OL-02-120	4	4.8
HLVAP-OL-02-130	5.5	6.6
HLVAP-OL-02-140	5.5	6.6
HLVAP-OL-02-150	7	8.4
HLVAP-OL-02-160	8.5	10.2
HLVAP-OL-02-170	9.5	11.4

Dryer and vacuum pump to be ordered separately.

HLVAP-OL-02-100 to HLVAP-OL-02-140 = Single Pump
HLVAP-OL-02-150 to HLVAP-OL-02-170 = Duplex Pump
(Duplex = 2 x pumps supplied on frame)
Multi-bank dryer installations require multiple vacuum pumps.
For example, 3 x FBP LE 170 requires 3 x HLVAP-OL-02-170 pumps or alternatively consider connection to a centralised vacuum system.

Stated flows are for operation at 7 bar (g) (102 psi g) with reference to 20°C, 1 bar (a), 0% relative water vapour pressure. For flows at other pressures, apply the correction factors shown below.

Product Selection and Correction Factors

For correct operation, compressed air dryers must be sized for the maximum (summer) inlet temperature, maximum (summer) ambient temperature, minimum inlet pressure, required outlet dewpoint and maximum flow rate of the installation.

CFMIT - Correction Factor Maximum Inlet Temperature

Maximum Inlet Temperature	°C	25	30	35	40	45	50
	°F	77	86	95	104	113	122
Correction Factor		1.00	1.00	1.00	1.04	1.14	1.37

To select a dryer, first calculate the Minimum Drying Capacity (MDC) using the formula below then select a dryer from the flow rate table above with a flow rate equal to or above the MDC.

Minimum Drying Capacity (MDC) =

Max System Flow x CFMIT x CFMAT x CFMIP x CFOD

CFMAT - Correction Factor Maximum Ambient Temperature

Maximum Ambient Temperature	°C	25	30	35	40	45	50
	°F	77	86	95	104	113	122
Correction Factor		1.00	1.00	1.00	1.00	1.00	1.00

CFMIP - Correction Factor Minimum Inlet Pressure

Minimum Inlet Pressure	bar g	4	5	6	7	8	9	10	11	12	13
	psi g	58	73	87	100	116	131	145	160	174	189
Correction Factor		1.60	1.33	1.14	1.00	0.89	0.80	0.73	0.67	0.62	0.57

CFOD - Correction Factor Outlet Dewpoint

Outlet Dewpoint	°C	-40	-70
	°F	-40	-100
Correction Factor		1.00	1.43

Important Note: -20°C outlet dewpoint not available for FBP products as this dewpoint does not inhibit the growth of microorganisms.

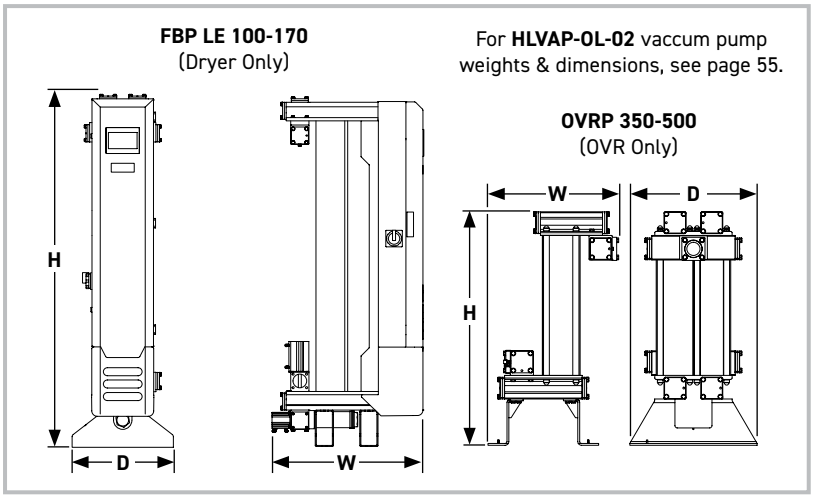

Weights & Dimensions

Model	Dimensions (Dryer Only)						Weight (Dryer Only)	
	Height (H)		Width (W)		Depth (D)			
	mm	ins	mm	ins	mm	ins	kg	lbs
FBPLE 100	1672	65.8	816	32.1	550	21.7	217	478
FBP LE 110	1672	65.8	987	38.9	550	21.7	277	611
FBP LE 120	1917	75.5	987	38.9	550	21.7	372	820
FBP LE 130	1917	75.5	1156	45.5	550	21.7	464	1023
FBP LE 140	1917	75.5	1325	52.2	550	21.7	555	1224
FBP LE 150	1917	75.5	1494	58.8	550	21.7	646	1424
FBP LE 160	1917	75.5	1663	65.5	550	21.7	739	1629
FBP LE 170	1917	75.5	1832	72.1	550	21.7	830	1830

Model	Dimensions (OVR Only)						Weight (OVR Only)	
	Height (H)		Width (W)		Depth (D)			
	mm	ins	mm	ins	mm	ins	kg	lbs
OVRP350H	1062	41.8	538	21.2	550	21.7	67	147
OVRP400H	1062	41.8	682	26.9	550	21.7	93	205
OVRP400I	1062	41.8	682	26.9	550	21.7	93	205
OVRP450I	1062	41.8	836	32.9	550	21.7	121	267
OVRP500J	1062	41.8	1005	39.6	550	21.7	144	318

Filtration (Included)

Model	Pipe Size BSPP	Dryer Inlet			Dryer Outlet		
		Included	Included	Included	Included	Included	Included
		Liquid Separator	General Purpose Pre-filter	High Efficiency Filter	Oil Vapour Reduction Filter	General Purpose Dry Particulate Filter	High Efficiency Dry Particulate Filter
FBP LE 100	2"	WSPX040HGT1X	AOPX040HGFX	AAPX040HGFX	OVRP350HGXX	AOPX040HGMX	AAPX040HGFX
FBP LE 110	2"	WSPX040HGT1X	AOPX040HGFX	AAPX040HGFX	OVRP400HGXX	AOPX040HGMX	AAPX040HGFX
FBP LE 120	2½"	WSPX045IGT1X	AOPX045IGFX	AAPX045IGFX	OVRP400IGXX	AOPX045IGMX	AAPX045IGFX
FBP LE 130	2½"	WSPX045IGT1X	AOPX045IGFX	AAPX045IGFX	OVRP400IGXX	AOPX045IGMX	AAPX045IGFX
FBP LE 140	2½"	WSPX050IGT1X	AOPX050IGFX	AAPX050IGFX	OVRP450IGXX	AOPX050IGMX	AAPX050IGFX
FBP LE 150	2½"	WSPX050IGT1X	AOPX050IGFX	AAPX050IGFX	OVRP450IGXX	AOPX050IGMX	AAPX050IGFX
FBP LE 160	3"	WSPX055JGT1X	AOPX055JGFX	AAPX055JGFX	OVRP500JGXX	AOPX055JGMX	AAPX055JGFX
FBP LE 170	3"	WSPX055JGT1X	AOPX055JGFX	AAPX055JGFX	OVRP500JGXX	AOPX055JGMX	AAPX055JGFX

Parker Catalogue Numbers

Model	-40°C PDP	-70°C PDP
FBP LE 100	FBPLE100-40G13BC	FBPLE100-70G13BC
FBP LE 110	FBPLE110-40G13BC	FBPLE110-70G13BC
FBP LE 120	FBPLE120-40G13BC	FBPLE120-70G13BC
FBP LE 130	FBPLE130-40G13BC	FBPLE130-70G13BC
FBP LE 140	FBPLE140-40G13BC	FBPLE140-70G13BC
FBP LE 150	FBPLE150-40G13BC	FBPLE150-70G13BC
FBP LE 160	FBPLE160-40G13BC	FBPLE160-70G13BC
FBP LE 170	FBPLE170-40G13BC	FBPLE170-70G13BC

HVLAP-OL-02 Vacuum Pumps

Suitable for CDAS/OFAS/FBP LE 100-170 and MXLE 102C-108

The purge air requirement for the heatless vacuum assisted dryer is reduced from around 20% to 3% of the dryer's literature reference conditions.

The energy reductions from reducing the purge air offset the energy required to operate the vacuum pump and still provide significant energy savings overall.

The heatless vacuum assisted dryer operates almost identically to the standard heatless dryer, however its design includes two additional components, the **vacuum valve** and the **vacuum pump.**

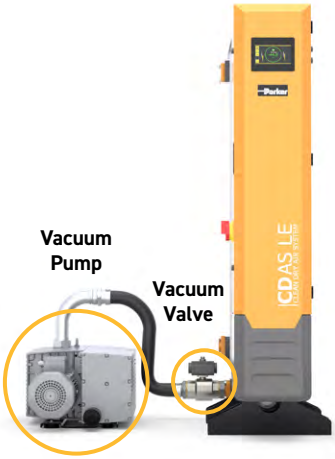

CDAS/OFAS/FBP LE Flow Rates

Model	Pipe Size	Inlet Flow Rate			
		L/s	m³/min	m³/hr	cfm
CDAS/OFAS/FBP LE 100	2"	113	6.81	408	240
CDAS/OFAS/FBP LE 110	2"	170	10.22	612	360
CDAS/OFAS/FBP LE 120	2½"	213	12.75	765	450
CDAS/OFAS/FBP LE 130	2½"	283	17	1020	600
CDAS/OFAS/FBP LE 140	2½"	354	21	1275	750
CDAS/OFAS/FBP LE 150	2½"	425	26	1530	900
CDAS/OFAS/FBP LE 160	3"	496	30	1785	1050
CDAS/OFAS/FBP LE 170	3"	567	34	2040	1200
2 x CDAS/OFAS/FBP LE 140	2½"	708	43	2550	1500
2 x CDAS/OFAS/FBP LE 150	2½"	850	51	3060	1800
2 x CDAS/OFAS/FBP LE 160	3"	992	60	3570	2100
2 x CDAS/OFAS/FBP LE 170	3"	1133	68	4080	2400
3 x CDAS/OFAS/FBP LE 150	2½"	1275	77	4590	2700
3 x CDAS/OFAS/FBP LE 160	3"	1488	89	5355	3150
3 x CDAS/OFAS/FBP LE 170	3"	1700	102	6120	3600

Vacuum Pump Part Number and kW

Vacuum Pump 50Hz/60Hz	kW @ 50Hz	kW @ 60Hz
HLVAP-OL-02-100	3	3.6
HLVAP-OL-02-110	3	3.6
HLVAP-OL-02-120	4	4.8
HLVAP-OL-02-130	5.5	6.6
HLVAP-OL-02-140	5.5	6.6
HLVAP-OL-02-150	7	8.4
HLVAP-OL-02-160	8.5	10.2
HLVAP-OL-02-170	9.5	11.4

All HLVAP-OL-02 parts are supplied as vacuum pump(s), vacuum valve, 3m vacuum hose and fittings.

Dryer and vacuum pump to be ordered separately.

HLVAP-OL-02-100 to HLVAP-OL-02-140 = Single Pump
HLVAP-OL-02-150 to HLVAP-OL-02-170 = Duplex Pump
(Duplex = 2 x pumps supplied on frame).

Stated flows are for operation at 7 bar (g) (102 psi g) with reference to 20°C, 1 bar (a), 0% relative water vapour pressure.

HLVAP-OL-02 pumps are suitable for both the new CDAS/OFAS/FBP LE 100-170 dryer ranges and existing MXLE 102C-108 dryers.

HLVAP-OL-02 pumps are identical in physical size and performance to the previous HLVAP-OL-01 models. The 02 variants differ in that they are supplied with a PT1000 temperature sensor for connection to the CDAS OFAS LE/FBP LE dryer controller.

The addition of the PT1000 temperature sensor allows rapid startup of the new CDAS/OFAS/FBP LE 100-170 dryer ranges, should a "brown out" (intermittent power loss) condition occur (connection cable supplied as standard with the new dryer models).

PT1000 sensor cannot be connected directly to an existing MXLE dryer controller (this does not affect dryer/pump operation).

MXLE Vacuum Pump Cross Reference - Previous Pumps to Current Pumps

Model	Previous MXLE Pump Models			Current Pump Models
	Single Frequency 50Hz	Single Frequency 60Hz	Frequency 50Hz / 60Hz	Dual Frequency 50Hz / 60Hz
MXLE102C	MXLEP2C-OL	MXLEP2C-OL-60	HLVAP-OL-01-100	HLVAP-OL-02-100
MXLE103C	MXLEP3C-OL	MXLEP3C-OL-60	HLVAP-OL-01-110	HLVAP-OL-02-110
MXLE103	MXLEP3-OL	MXLEP3-OL-60	HLVAP-OL-01-120	HLVAP-OL-02-120
MXLE104	MXLEP4-OL	MXLEP4-OL-60	HLVAP-OL-01-130	HLVAP-OL-02-130
MXLE105	MXLEP5-OL	MXLEP5-OL-60	HLVAP-OL-01-140	HLVAP-OL-02-140
MXLE106	MXLEP6-OL	MXLEP6-OL-60	HLVAP-OL-01-150	HLVAP-OL-02-150
MXLE107	MXLEP7-OL	MXLEP7-OL-60	HLVAP-OL-01-160	HLVAP-OL-02-160
MXLE108	MXLEP8-OL	MXLEP8-OL-60	HLVAP-OL-01-170	HLVAP-OL-02-170

HLVAP-OL-02-100-140
SINGLE VACUUM PUMP

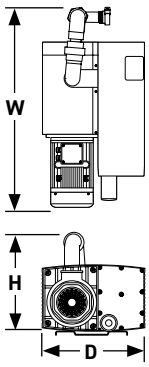

HLVAP-OL-02-150-170
DUPLEX VACUUM PUMP

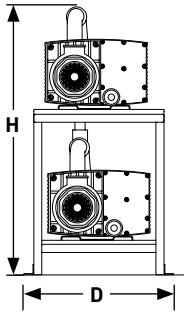

Weights & Dimensions

Vacuum Pump Model	Vacuum Pump Dimensions							
	Height (H)		Width (W)		Depth (D)		Weight	
	mm	ins	mm	ins	mm	ins	kg	lbs
HLVAP-OL-02-100	400	15.75	933	36.73	523	20.59	89	196
HLVAP-OL-02-110	400	15.75	933	36.73	523	20.59	89	196
HLVAP-OL-02-120	400	15.75	933	36.73	523	20.59	194	428
HLVAP-OL-02-130	400	15.75	933	36.73	523	20.59	184	406
HLVAP-OL-02-140	400	15.75	933	36.73	523	20.59	184	406
HLVAP-OL-02-150	1304	51.34	1100	43.31	560	22.05	420	926
HLVAP-OL-02-160	1304	51.34	1100	43.31	560	22.05	390	860
HLVAP-OL-02-170	1304	51.34	1100	43.31	560	22.05	390	860

Vacuum Pump Service Kits

Vacuum Pump Model	Service Interval	Kit Type/Description	Part Number
HLVAP-OL-02-100	6 months	Full oil change.	M06.HLVAP-OL-01-100
	12 months	Full oil change and maintenance kit.	M12.HLVAP-OL-01-100
HLVAP-OL-02-110	6 months	Full oil change.	M06.HLVAP-OL-01-110
	12 months	Full oil change and maintenance kit.	M12.HLVAP-OL-01-110
HLVAP-OL-02-120	6 months	Full oil change.	M06.HLVAP-OL-01-120
	12 months	Full oil change and maintenance kit.	M12.HLVAP-OL-01-120
HLVAP-OL-02-130	6 months	Full oil change.	M06.HLVAP-OL-01-130
	12 months	Full oil change and maintenance kit.	M12.HLVAP-OL-01-130
HLVAP-OL-02-140	6 months	Full oil change.	M06.HLVAP-OL-01-140
	12 months	Full oil change and maintenance kit.	M12.HLVAP-OL-01-140
HLVAP-OL-02-150	6 months	Full oil change.	M06.HLVAP-OL-01-150
	12 months	Full oil change and maintenance kit.	M12.HLVAP-OL-01-150
HLVAP-OL-02-160	6 months	Full oil change.	M06.HLVAP-OL-01-160
	12 months	Full oil change and maintenance kit.	M12.HLVAP-OL-01-160
HLVAP-OL-02-170	6 months	Full oil change.	M06.HLVAP-OL-01-170
	12 months	Full oil change and maintenance kit.	M12.HLVAP-OL-01-170

CDAS HL ATEX Medium Flow Heatless Adsorption Dryers

Dryer Performance

Dryer Models	Dewpoint (Standard)		ISO8573-1:2010 Classification (Standard)
	°C	°F	
CDAS HL ATEX	-40	-40	Class 2:2:2

ISO8573-1 Classifications when used with OIL-X pre/post filtration.

Technical Data

Dryer Models	Minimum Operating Pressure		Maximum Operating Pressure		Minimum Operating Temperature		Maximum Operating Temperature		Maximum Ambient Temperature		Electrical Supply	Thread Type	Noise Level
	bar g	psi g	bar g	psi g	°C	°F	°C	°F	°C	°F			dB(A)
CDAS HL ATEX 050-085	4	58	16	232	5	41	50	122	55	131	Not Applicable - Fully Pneumatic Operation	BSPP or NPT	<75

Flow Rates

Model	Pipe Size	Inlet Flow Rate			
		L/s	m^3/min	m^3/hr	cfm
CDAS HL 050 ATEX	½"	15	0.92	55	32
CDAS HL 055 ATEX	½"	19	1.17	70	41
CDAS HL 060 ATEX	½"	25	1.50	90	53
CDAS HL 065 ATEX	½"	31	1.84	110	65
CDAS HL 070 ATEX	¾"	42	2.51	150	88
CDAS HL 075 ATEX	1"	51	3.09	185	109
CDAS HL 080 ATEX	1"	61	3.67	220	129
CDAS HL 085 ATEX	1½"	83	5.01	300	177

Stated flows are for operation at 7 bar (g) (102 psi g) with reference to 20°C, 1 bar (a), 0% relative water vapour pressure. For flows at other pressures, apply the correction factors shown below.

Product Selection & Correction Factors

For correct operation, compressed air dryers must be sized using for the maximum (summer) inlet temperature, maximum (summer) ambient temperature, minimum inlet pressure, required outlet dewpoint and maximum flow rate of the installation.

To select a dryer, first calculate the MDC (Minimum Drying Capacity) using the formula below then select a dryer from the flow rate table above with a flow rate equal to or above the MDC.

Minimum Drying Capacity = System Flow x CFMIT x CFMAT x CFMIP x CFOD

CFMIT - Correction Factor Maximum Inlet Temperature

Maximum Inlet Temperature	°C	25	30	35	40	45	50
	°F	77	86	95	104	113	122
Correction Factor		1.00	1.00	1.00	1.04	1.14	1.37

CFMAT - Correction Factor Maximum Ambient Temperature

Maximum Ambient Temperature	°C	25	30	35	40	45	50
	°F	77	86	95	104	113	122
Correction Factor		1.00	1.00	1.00	1.00	1.00	1.00

CFMIP - Correction Factor Minimum Inlet Pressure

Minimum Inlet Pressure	bar g	4	5	6	7	8	9	10	11	12	13	14	15	16
	psi g	58	73	87	100	116	131	145	160	174	189	203	218	232
Correction Factor		1.60	1.33	1.14	1.00	0.89	0.80	0.73	0.67	0.62	0.57	0.53	0.50	0.47

CFOD - Correction Factor Outlet Dewpoint

Outlet Dewpoint	°C	-20	-40	-70
	°F	-4	-40	-100
Correction Factor		0.91	1.00	2.00

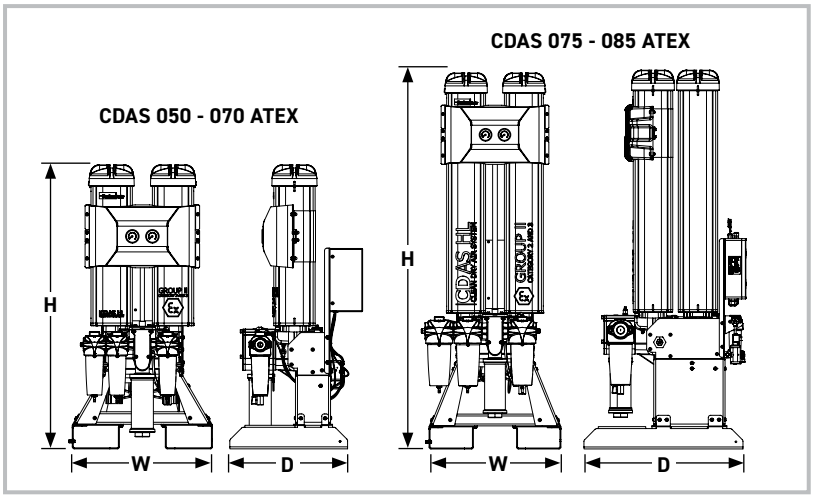

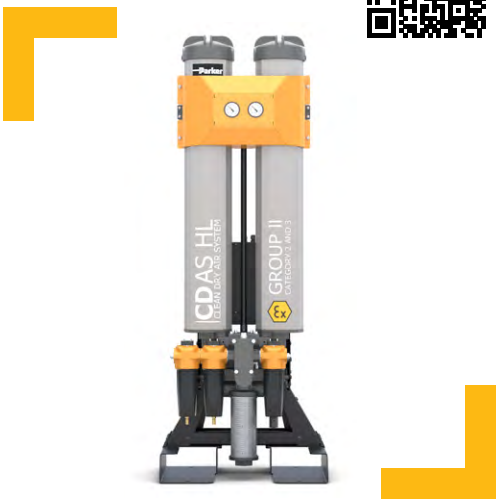

Weights & Dimensions

Model	Dimensions						Weight	
	Height (H)		Width (W)		Depth (D)			
	mm	ins	mm	ins	mm	ins	kg	lbs
CDAS HL 050 ATEX	1133	45	559	22	490	19	76	168
CDAS HL 055 ATEX	1313	52	559	22	490	19	84	185
CDAS HL 060 ATEX	1510	59	559	22	490	19	93	205
CDAS HL 065 ATEX	1660	65	559	22	490	19	100	220
CDAS HL 070 ATEX	2020	80	559	22	490	19	120	265
CDAS HL 075 ATEX	1595	63	559	22	682	27	165	364
CDAS HL 080 ATEX	1745	69	559	22	682	27	180	397
CDAS HL 085 ATEX	2105	83	559	22	682	27	210	463

Filtration (Required/Included)

Model	Pipe Size BSPP or NPT	Dryer Inlet			Dryer Outlet		
		Required	Included	Included	Not Included	Included	Not Included
		Liquid Separator	General Purpose Pre-filter	High Efficiency Filter	Oil Vapour Reduction Filter	General Purpose Dry Particulate Filter	High Efficiency Dry Particulate Filter
CDAS HL 050 ATEX	½"	WSPX015C G FX	AOPX015C	AAPX015C	-	AAPX015C	-
CDAS HL 055 ATEX	½"	WSPX015C G FX	AOPX015C	AAPX015C	-	AAPX015C	-
CDAS HL 060 ATEX	½"	WSPX015C G FX	AOPX020C	AAPX020C	-	AAPX020C	-
CDAS HL 065 ATEX	½"	WSPX015C G FX	AOPX020C	AAPX020C	-	AAPX020C	-
CDAS HL 070 ATEX	¾"	WSPX025D G FX	AOPX025D	AAPX025D	-	AAPX025D	-
CDAS HL 075 ATEX	1"	WSPX025E G FX	AOPX025E	AAPX025E	-	AAPX025E	-
CDAS HL 080 ATEX	1"	WSPX025E G FX	AOPX025E	AAPX025E	-	AAPX025E	-
CDAS HL 085 ATEX	1½"	WSPX030G G FX	AOPX030G	AAPX030G	-	AAPX030G	-

Select G for BSPP Threads/Select N for NPT Threads

Parker Catalogue Numbers

Model	-20°C PDP / -40°C PDP	-70°C PDP
CDAS HL 050 ATEX	CDASHL050-40G16PP	CDASHL050-70G16PP
CDAS HL 055 ATEX	CDASHL055-40G16PP	CDASHL055-70G16PP
CDAS HL 060 ATEX	CDASHL060-40G16PP	CDASHL060-70G16PP
CDAS HL 065 ATEX	CDASHL065-40G16PP	CDASHL065-70G16PP
CDAS HL 070 ATEX	CDASHL070-40G16PP	CDASHL070-70G16PP
CDAS HL 075 ATEX	CDASHL075-40G16PP	CDASHL075-70G16PP
CDAS HL 080 ATEX	CDASHL080-40G16PP	CDASHL080-70G16PP
CDAS HL 085 ATEX	CDASHL085-40G16PP	CDASHL085-70G16PP

MX ATEX Pneumatic Heatless Adsorption Dryers

Dryer Performance

Dryer Models	Dewpoint (Standard)		ISO8573-1:2010 Classification (Standard)	Dewpoint (Option 1)		ISO8573-1:2010 Classification (Option 1)	Dewpoint (Option 2)		ISO8573-1:2010 Classification (Option 2)
	°C	°F		°C	°F		°C	°F	
MXP DS	-40	-40	Class 2:2:2	-70	-100	Class 2:1:2	-20	-4	Class 2:3:2

ISO8573-1 Classifications when used with OIL-X pre/post filtration.

Technical Data

Dryer Models	Minimum Operating Pressure		Maximum Operating Pressure		Minimum Operating Temperature		Maximum Operating Temperature		Maximum Ambient Temperature		Electrical Supply (Standard)	Electrical Supply (Optional)	Thread Type	Noise Level
	bar g	psi g	bar g	psi g	°C	°F	°C	°F	°C	°F				dB(A)
MXP 102CDS - 108DS	4	58	13	190	5	41	50	122	55	131	Not Applicable - Fully Pneumatic Operation		BSPP	<75

Flow Rates

Model	Pipe Size	Inlet Flow Rate			
		L/s	m^3/min	m^3/hr	cfm
MXP102C	2"	113	6.81	408	240
MXP103C	2"	170	10.22	612	360
MXP103	2"	213	12.75	765	450
MXP104	2½"	283	17	1020	600
MXP105	2½"	354	21	1275	750
MXP106	2½"	425	26	1530	900
MXP107	2½"	496	30	1785	1050
MXP108	2½"	567	34	2040	1200

Stated flows are for operation at 7 bar (g) (102 psi g) with reference to 20°C, 1 bar (a), 0% relative water vapour pressure. For flows at other pressures, apply the correction factors shown below.

Product Selection & Correction Factors

For correct operation, compressed air dryers must be sized using for the maximum (summer) inlet temperature, maximum (summer) ambient temperature, minimum inlet pressure, required outlet dewpoint and maximum flow rate of the installation.

To select a dryer, first calculate the MDC (Minimum Drying Capacity) using the formula below then select a dryer from the flow rate table above with a flow rate equal to or above the MDC.

Minimum Drying Capacity = System Flow x CFMIT x CFMAT x CFMIP x CFOD

CFMIT - Correction Factor Maximum Inlet Temperature

Maximum Inlet Temperature	°C	25	30	35	40	45	50
	°F	77	86	95	104	113	122
Correction Factor		1.00	1.00	1.00	1.04	1.14	1.37

CFMAT - Correction Factor Maximum Ambient Temperature

Maximum Ambient Temperature	°C	25	30	35	40	45	50
	°F	77	86	95	104	113	122
Correction Factor		1.00	1.00	1.00	1.00	1.00	1.00

CFMIP - Correction Factor Minimum Inlet Pressure

Minimum Inlet Pressure	bar g	4	5	6	7	8	9	10	11	12	13
	psi g	58	73	87	100	116	131	145	160	174	189
Correction Factor		1.60	1.33	1.14	1.00	0.89	0.80	0.73	0.67	0.62	0.57

CFOD - Correction Factor Outlet Dewpoint

Outlet Dewpoint	°C	-20	-40	-70
	°F	-4	-40	-100
Correction Factor		0.91	1.00	1.43

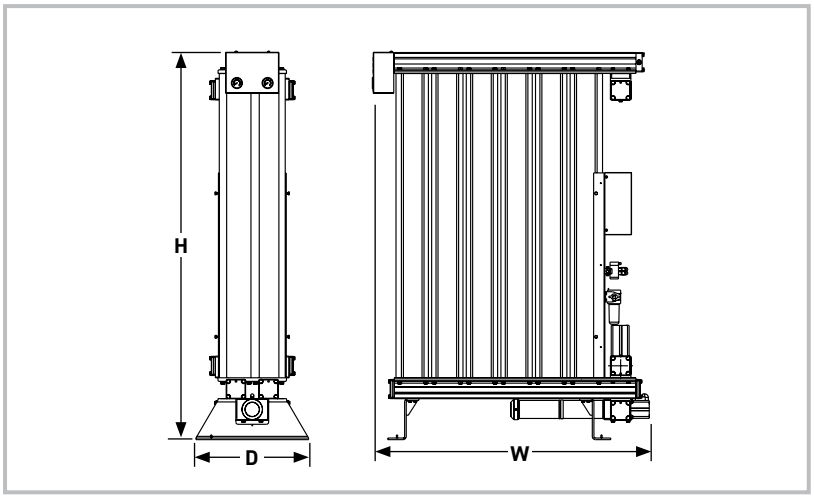

Weights & Dimensions (Dryer Only)

Model	Dimensions						Weight	
	Height (H)		Width (W)		Depth (D)			
	mm	ins	mm	ins	mm	ins	kg	lbs
MXP102C	1647	64.8	687	27.0	550	21.7	235	518
MXP103C	1647	64.8	856	33.7	550	21.7	316	696
MXP103	1892	74.5	856	33.7	550	21.7	355	782
MXP104	1892	74.5	1025	40.3	550	21.7	450	992
MXP105	1892	74.5	1194	47.0	550	21.7	543	1197
MXP106	1892	74.5	1363	53.6	550	21.7	637	1404
MXP107	1892	74.5	1532	60.3	550	21.7	731	1611
MXP108	1892	74.5	1701	67.0	550	21.7	825	1818

Filtration (Included/Required)

Model	Pipe Size BSPP	Dryer Inlet			Dryer Outlet		
		Required	Required	Required	Not Included	Required	Not Included
		Liquid Separator	General Purpose Pre-filter	High Efficiency Filter	Oil Vapour Reduction Filter	General Purpose Dry Particulate Filter	High Efficiency Dry Particulate Filter
MXP102C	2"	WSPX040HGHX	AOPX040HGFX	AAPX040HGFX	-	AOPX040HGFX	-
MXP103C	2"	WSPX040HGHX	AOPX040HGFX	AAPX040HGFX	-	AOPX040HGFX	-
MXP103	2½"	WSPX045IGHX	AOPX045IGFX	AAPX045IGFX	-	AOPX045IGFX	-
MXP104	2½"	WSPX045IGHX	AOPX045IGFX	AAPX045IGFX	-	AOPX045IGFX	-
MXP105	2½"	WSPX050IGHX	AOPX050IGFX	AAPX050IGFX	-	AOPX050IGFX	-
MXP106	2½"	WSPX050IGHX	AOPX050IGFX	AAPX050IGFX	-	AOPX050IGFX	-
MXP107	3"	WSPX055JGHX	AOPX055JGFX	AAPX055JGFX	-	AOPX055JGFX	-
MXP108	3"	WSPX055JGHX	AOPX055JGFX	AAPX055JGFX	-	AOPX055JGFX	-

Parker Catalogue Numbers

Model	-20°C PDP / -40°C PDP	-70°C PDP
MXP102C	MXP102C-40-ATEX	MXP102C-70-ATEX
MXP103C	MXP103C-40-ATEX	MXP103C-70-ATEX
MXP103	MXP103-40-ATEX	MXP103-70-ATEX
MXP104	MXP104-40-ATEX	MXP104-70-ATEX
MXP105	MXP105-40-ATEX	MXP105-70-ATEX
MXP106	MXP106-40-ATEX	MXP106-70-ATEX
MXP107	MXP107-40-ATEX	MXP107-70-ATEX
MXP108	MXP108-40-ATEX	MXP108-70-ATEX

Dryer catalogue number does not include filtration - Please order filters separately

Important Notes Regarding Ordering MXP Dryers

Please note that when ordering MXP heatless dryers, the following items must also be ordered separately.

- MXP Dryer
- Inlet/Outlet Flange kit (BSPP or NPT)
- Pre/post Filtration (Grades WS/AO/AA - AO)
- FCD (Flow Control Device) - only required for multi-bank installations
- QRV - Part Number 608203833 for operation 9 bar (g)

Multi-banking

A unique advantage of modular aluminium dryers is the ability to access the full cross sectional area of the drying columns and fill the desiccant material with a snowstorm filler, a device which provides maximum packing density of the desiccant material. Snowstorm filling the desiccant material provides a low and equal resistance to the air flow which allows multiple drying chambers to be used without preferential flow and provides a consistent outlet dewpoint with less desiccant and in a smaller, more compact and lightweight dryer.

Another advantage of snowstorm filling is that it also allows multiple dryer banks to be used without preferential flow because each individual dryer will have an equal pressure drop. This is a feature unique to modular dryers and is known as multi-banking.

Multi-bank CDAS LE 170 Installation

Flow Control Device (FCD)

Compressed air will flow down a uniform pipe at a constant velocity. For a fixed compressed air flow rate, reducing the diameter of the pipe will increase the speed of the compressed air. Changing pipe diameter can therefore be used as a means to control compressed air flow rate, which is the purpose of an FCD (Flow Control Device).

If the pipe diameter is reduced far enough, the air velocity will increase until it reaches its maximum, the speed of sound (hence the FCDs common name of 'Sonic Nozzle').

Although not needed for every application, FCDs can be used to prevent significant overflow of a desiccant dryer and help maintain a constant outlet dewpoint. They are also commonly used on multi-bank installations (two or more modular aluminium dryers connected in parallel) to prevent preferential flow if piping is unbalanced.

FCDs are installed in the outlet of a dryer and are sized so the maximum flow rate of the device is above the outlet flow rate of the dryer.

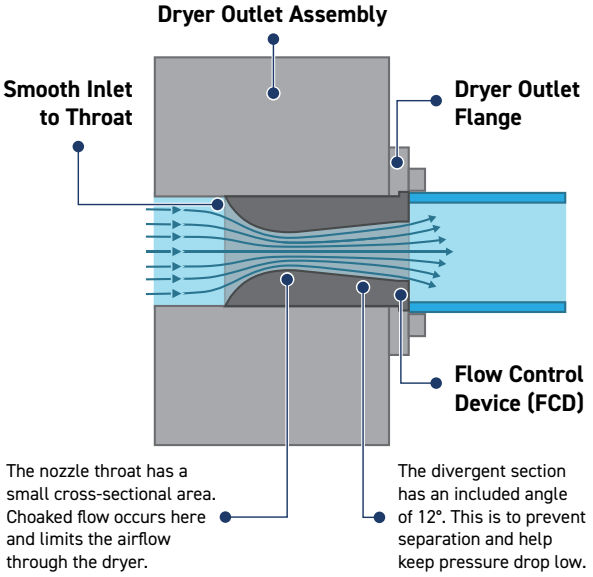

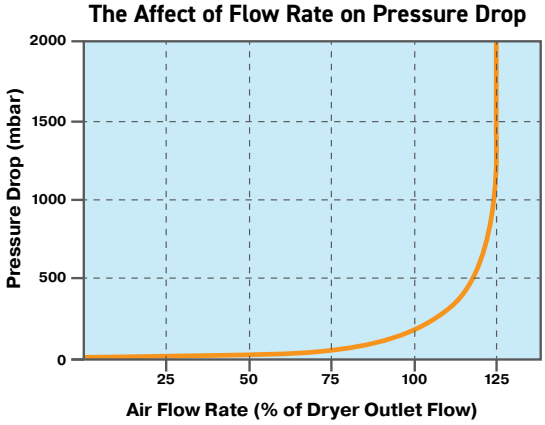

Below 100% of the dryers outlet capacity, they have minimal impact on differential pressure (dP) or flow.

Above 100% of the dryer's rated outlet capacity, an increasingly higher differential pressure will be generated by the FCD.

This will allow a small dryer overflow to occur satisfying temporary system demand, however if demand were to increase, the line pressure downstream of the FCD will start to fall indicating to the user the dryer is being overflowed.

All precautions should be taken from the initial sizing of the dryer to the installation and operation to ensure the dryer is not overflowed.

It is recommended that FCDs are fitted to the outlet of each modular dryer when installed in a multi-bank configuration.

CDAS HL/OFAS HL/FBP HL & CDAS LE/OFAS LE/FBP LE dryers utilise the same FCDs but have different outlet flow rates.

FCD max flow rate is therefore equivalent to approximately 105% of the outlet flow rate for a CDAS LE/OFAS LE/FBP LE dryer and 125% of the outlet flow rate for a CDAS HL/OFAS HL/FBP HL dryer.

Benefits of Fitting a Flow Control Device (FCD)

- Prevents preferential or significant overflow of the dryer
- Helps to maintain a constant outlet pressure dewpoint
- Indicates by high pressure drop when system demand exceeds rated capacity

FCD Flange Kits

For CDAS/OFAS/FBP HL & LE Dryers (Models 100 -170)

When more than one dryer is installed (multi-bank installation), a Flow Control Device (FCD) is also required. The FCD will fit inside the outlet flange. Please order the appropriate outlet FCD Outlet Flange from the list below and FCD from the tables on the following pages.

FCD Flange Kit	Description	Quantity In Kit	To Suit CDAS/OFAS/FBP HL & LE Models
608730410	2" BSPP FCD Outlet Flange	1	**100/110**
608730411	2" NPT FCD Outlet Flange	1	
608730412	2½" BSPP FCD Outlet Flange	1	**120/130/140/150**
608730413	2½" NPT FCD Outlet Flange	1	
608730414	3" BSPP FCD Outlet Flange	1	**160/170**
608730415	3" NPT FCD Outlet Flange	1	

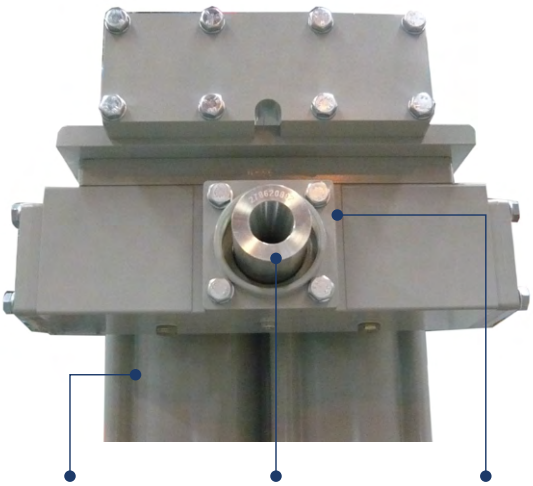

Flange Kit Examples

Note: FCD not included in flange kit and must be ordered separately.

2" & 2½" FCD Flanges

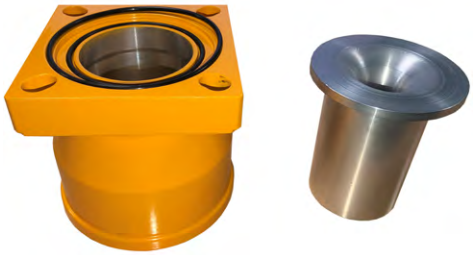

3" FCD Flange with FCD
(FCD not included)

3" FCD Flange with FCD Fitted
(FCD not included)

Flow Control Device (FCD) - Product Selection

For CDAS/OFAS/FBP HL & LE Dryers (Models 100 -170)

To size FCDs correctly, the following information is required:

- Dryer model
- Dewpoint dryer has been sized to deliver
- Minimum inlet pressure
- Maximum inlet temperature

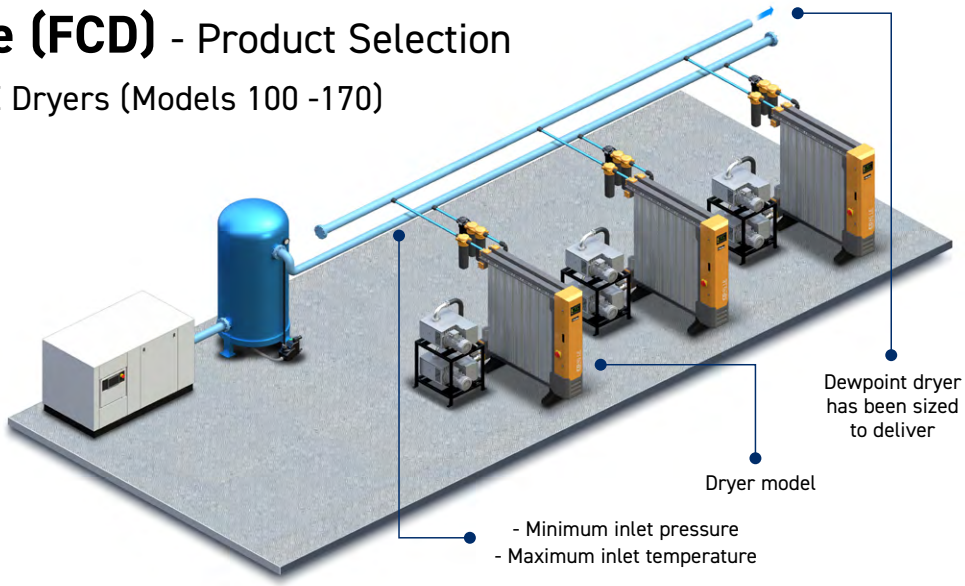

Flow Control Device Sizing Examples

Example 1 – CDAS HL
The customer orders **2 x CDAS HL 170** dryers with BSPP connections. The site parameters are an inlet temperature of 35°C, inlet pressure of 7 bar g, and a pressure dewpoint of -40°C. The FCD required for each dryer is **608620053**, and the correct flange kit required for each dryer is **608730414**.

Example 2 – CDAS LE (Above)
The customer orders **3 x CDAS LE 170** dryers. The site parameters are a maximum inlet temperature of 40°C, minimum inlet pressure of 9 bar g, and a pressure dewpoint of -70°C. The FCD required for each dryer is **608620044**, and the correct flange kit required for each dryer is **608730414**.

Flow Control Device (FCD) Product Selection

For CDAS HL/ OFAS HL/FBP HL Heatless and CDAS LE/OFAS LE/FBP LE Heatless Low Energy Dryers (Models 100 to 170)

35°C Inlet Temperature -20°C PDP								
Pressure	**CDAS/OFAS/ FBP 100**	**CDAS/OFAS/ FBP 110**	**CDAS/OFAS/ FBP 120**	**CDAS/OFAS/ FBP 130**	**CDAS/OFAS/ FBP 140**	**CDAS/OFAS/ FBP 150**	**CDAS/OFAS/ FBP 160**	**CDAS/ OFAS/FBP 170**
4 bar	608620009	608620014	608620017	608620021	608620043	608620046	608620049	608620052
5 bar	608620010	608620015	608620018	608620022	608620044	608620048	608620051	608620054
6 bar	608620011	608620015	608620018	608620023	608620045	608620048	608620052	608620055
7 bar	608620011	608620016	608620019	608620023	608620045	608620049	608620052	608620056
8 bar	608620011	608620016	608620019	608620024	608620046	608620050	608620053	608620056
9 bar	608620011	608620016	608620020	608620024	608620046	608620050	608620053	608620057
10 bar	608620012	608620017	608620020	608620024	608620047	608620050	608620054	608620057
11 bar	608620012	608620017	608620020	608620025	608620047	608620051	608620054	608620057
12 bar	608620012	608620017	608620020	608620025	608620047	608620051	608620054	Contact Parker
13 bar	608620012	608620017	608620020	608620025	608620047	608620051	608620054	Contact Parker

35°C Inlet Temperature -40°C PDP								
Pressure	**CDAS/OFAS/ FBP 100**	**CDAS/OFAS/ FBP 110**	**CDAS/OFAS/ FBP 120**	**CDAS/OFAS/ FBP 130**	**CDAS/OFAS/ FBP 140**	**CDAS/OFAS/ FBP 150**	**CDAS/OFAS/ FBP 160**	**CDAS/OFAS/ FBP 170**
4 bar	608620008	608620012	608620015	608620019	608620040	608620044	608620047	608620049
5 bar	608620009	608620013	608620016	608620020	608620042	608620045	608620048	608620051
6 bar	608620009	608620014	608620017	608620021	608620043	608620046	608620049	608620052
7 bar	608620010	608620014	608620017	608620022	608620043	608620047	608620050	608620053
8 bar	608620010	608620015	608620018	608620022	608620044	608620047	608620050	608620053
9 bar	608620010	608620015	608620018	608620022	608620044	608620048	608620051	608620054
10 bar	608620010	608620015	608620018	608620023	608620044	608620048	608620051	608620054
11 bar	608620011	608620015	608620018	608620023	608620045	608620048	608620052	608620055
12 bar	608620011	608620015	608620019	608620023	608620045	608620049	608620052	608620055
13 bar	608620011	608620016	608620019	608620023	608620045	608620049	608620052	608620055

35°C Inlet Temperature -70°C PDP								
Pressure	**CDAS/OFAS/ FBP 100**	**CDAS/OFAS/ FBP 110**	**CDAS/OFAS/ FBP 120**	**CDAS/OFAS/ FBP 130**	**CDAS/OFAS/ FBP 140**	**CDAS/OFAS/ FBP 150**	**CDAS/OFAS/ FBP 160**	**CDAS/OFAS/ FBP 170**
4 bar	608620008	608620012	608620015	608620019	608620040	608620044	608620047	608620049
5 bar	608620009	608620013	608620016	608620020	608620042	608620045	608620048	608620051
6 bar	608620009	608620014	608620017	608620021	608620043	608620046	608620049	608620052
7 bar	608620010	608620014	608620017	608620022	608620043	608620047	608620050	608620053
8 bar	608620010	608620015	608620018	608620022	608620044	608620047	608620050	608620053
9 bar	608620010	608620015	608620018	608620022	608620044	608620048	608620051	608620054
10 bar	608620010	608620015	608620018	608620023	608620044	608620048	608620051	608620054
11 bar	608620011	608620015	608620018	608620023	608620045	608620048	608620052	608620055
12 bar	608620011	608620015	608620019	608620023	608620045	608620049	608620052	608620055
13 bar	608620011	608620016	608620019	608620023	608620045	608620049	608620052	608620055

40°C Inlet Temperature -20°C PDP								
Pressure	**CDAS/OFAS/ FBP 100**	**CDAS/OFAS/ FBP 110**	**CDAS/OFAS/ FBP 120**	**CDAS/OFAS/ FBP 130**	**CDAS/OFAS/ FBP 140**	**CDAS/OFAS/ FBP 150**	**CDAS/OFAS/ FBP 160**	**CDAS/OFAS/ FBP 170**
4 bar	608620009	608620014	608620016	608620021	608620042	608620046	608620049	608620051
5 bar	608620010	608620014	608620017	608620022	608620043	608620047	608620050	608620053
6 bar	608620010	608620015	608620018	6086200 22	608620044	608620048	608620051	608620054
7 bar	608620011	608620015	608620018	608620023	608620045	608620048	608620052	608620055
8 bar	608620011	608620016	608620019	608620023	608620045	608620049	608620052	608620055
9 bar	608620011	608620016	608620019	608620024	608620046	608620049	608620053	608620056
10 bar	608620011	608620016	608620019	608620024	608620046	608620050	608620053	608620056
11 bar	608620011	608620016	608620020	608620024	608620046	608620050	608620053	608620057
12 bar	608620012	608620017	608620020	608620024	608620047	608620050	608620054	608620057
13 bar	608620011	608620017	608620020	608620025	608620047	608620050	608620054	608620057

40°C Inlet Temperature -40°C PDP								
Pressure	**CDAS/OFAS/ FBP 100**	**CDAS/OFAS/ FBP 110**	**CDAS/OFAS/ FBP 120**	**CDAS/OFAS/ FBP 130**	**CDAS/OFAS/ FBP 140**	**CDAS/OFAS/ FBP 150**	**CDAS/OFAS/ FBP 160**	**CDAS/OFAS/ FBP 170**
4 bar	608620008	608620012	608620015	608620018	608620040	608620043	608620046	608620048
5 bar	608620009	608620013	608620016	608620020	608620042	608620044	608620047	608620050
6 bar	608620009	608620013	608620016	608620020	608620043	608620045	608620048	608620051
7 bar	608620009	608620014	608620017	608620021	608620043	608620046	608620049	608620052
8 bar	608620010	608620014	608620017	608620021	608620044	608620047	608620050	608620053
9 bar	608620010	608620015	608620017	608620022	608620044	608620047	608620050	608620053
10 bar	608620010	608620015	608620018	608620022	608620044	608620047	608620051	608620054
11 bar	608620010	608620015	608620018	608620022	608620045	608620048	608620051	608620054
12 bar	608620010	608620015	608620018	608620023	608620045	608620048	608620051	608620054
13 bar	608620010	608620015	608620018	608620023	608620045	608620048	608620051	608620054

40°C Inlet Temperature -70°C PDP								
Pressure	**CDAS/OFAS/ FBP 100**	**CDAS/OFAS/ FBP 110**	**CDAS/OFAS/ FBP 120**	**CDAS/OFAS/ FBP 130**	**CDAS/OFAS/ FBP 140**	**CDAS/OFAS/ FBP 150**	**CDAS/OFAS/ FBP 160**	**CDAS/OFAS/ FBP 170**
4 bar	608620003	608620006	608620008	608620011	608620032	608620034	608620036	608620038
5 bar	608620004	608620007	608620009	608620013	608620033	608620036	608620038	608620040
6 bar	608620005	608620008	608620010	608620014	608620034	608620037	608620039	608620042
7 bar	608620005	608620009	608620011	608620014	608620035	608620038	608620040	608620043
8 bar	608620006	608620009	608620012	608620015	608620036	608620039	608620041	608620043
9 bar	608620006	608620010	608620012	608620015	608620036	608620039	608620042	608620044
10 bar	608620006	608620010	608620012	608620016	608620037	608620040	608620042	608620045
11 bar	608620006	608620010	608620012	608620016	608620037	608620040	608620043	608620045
12 bar	608620006	608620010	608620013	608620016	608620037	608620040	608620043	608620045
13 bar	608620007	608620010	608620013	608620016	608620038	608620041	608620043	608620046

Flow Control Device (FCD) Product Selection

For CDAS HL/OFAS HL/FBP HL Heatless and CDAS LE/OFAS LE/FBP LE Heatless Low Energy Dryers (Models 100 to 170)

45°C Inlet Temperature -20°C PDP								
Pressure	**CDAS/OFAS/ FBP 100**	**CDAS/OFAS/ FBP 110**	**CDAS/OFAS/ FBP 120**	**CDAS/OFAS/ FBP 130**	**CDAS/OFAS/ FBP 140**	**CDAS/OFAS/ FBP 150**	**CDAS/OFAS/ FBP 160**	**CDAS/OFAS/ FBP 170**
4 bar	608620008	608620012	608620015	608620019	608620040	608620043	608620046	608620049
5 bar	608620009	608620013	608620016	608620020	608620041	608620044	608620047	608620050
6 bar	608620009	608620014	608620016	608620021	608620042	608620045	608620049	608620051
7 bar	608620009	608620014	608620017	608620021	608620043	608620046	608620049	608620052
8 bar	608620010	608620014	608620017	608620022	608620043	608620047	608620050	608620053
9 bar	608620010	608620015	608620018	608620022	608620044	608620047	608620050	608620053
10 bar	608620010	608620015	608620018	608620022	608620044	608620048	608620051	608620054
11 bar	608620010	608620015	608620018	608620022	608620044	608620048	608620051	608620054
12 bar	608620010	608620015	608620018	608620023	608620045	608620048	608620051	608620054
13 bar	608620011	608620015	608620018	608620023	608620045	608620048	608620051	608620054

45°C Inlet Temperature -40°C PDP								
Pressure	**CDAS/OFAS/ FBP 100**	**CDAS/OFAS/ FBP 110**	**CDAS/OFAS/ FBP 120**	**CDAS/OFAS/ FBP 130**	**CDAS/OFAS/ FBP 140**	**CDAS/OFAS/ FBP 150**	**CDAS/OFAS/ FBP 160**	**CDAS/OFAS/ FBP 170**
4 bar	608620007	608620010	608620013	608620016	608620038	608620041	608620043	608620046
5 bar	608620007	608620011	608620014	608620018	608620039	608620042	608620045	608620047
6 bar	608620008	608620012	608620015	608620019	608620040	608620043	608620046	608620049
7 bar	608620008	608620013	608620015	608620019	608620041	608620044	608620047	608620050
8 bar	608620009	608620013	608620016	608620020	608620041	608620045	608620047	608620050
9 bar	608620009	608620013	608620016	608620020	608620042	608620045	608620048	608620051
10 bar	608620009	608620013	608620016	608620020	608620042	608620045	608620048	608620051
11 bar	608620009	608620014	608620016	608620021	608620042	608620046	608620049	608620052
12 bar	608620009	608620014	608620017	608620021	608620042	608620046	608620049	608620052
13 bar	608620009	608620014	608620017	608620021	608620043	608620046	608620049	608620052

45°C Inlet Temperature -70°C PDP								
Pressure	**CDAS/OFAS/ FBP 100**	**CDAS/OFAS/ FBP 110**	**CDAS/OFAS/ FBP 120**	**CDAS/OFAS/ FBP 130**	**CDAS/OFAS/ FBP 140**	**CDAS/OFAS/ FBP 150**	**CDAS/OFAS/ FBP 160**	**CDAS/OFAS/ FBP 170**
4 bar	608620002	608620005	608620007	608620009	608620029	608620032	608620033	608620035
5 bar	608620003	608620006	608620008	608620011	608620031	608620034	608620036	608620038
6 bar	608620004	608620007	608620009	608620012	608620033	608620035	608620037	608620039
7 bar	608620004	608620008	608620010	608620013	608620034	608620036	608620038	608620040
8 bar	608620005	608620008	608620010	608620013	608620034	608620037	608620039	608620041
9 bar	608620005	608620008	608620011	608620014	608620035	608620037	608620040	608620042
10 bar	608620005	608620009	608620011	608620014	608620035	608620038	608620040	608620042
11 bar	608620005	608620009	608620011	608620015	608620036	608620038	608620041	608620043
12 bar	608620006	608620009	608620011	608620015	608620036	608620039	608620041	608620043
13 bar	608620006	608620009	608620012	608620015	608620036	608620039	608620041	608620044

50°C Inlet Temperature -20°C PDP								
Pressure	**CDAS/OFAS/ FBP 100**	**CDAS/OFAS/ FBP 110**	**CDAS/OFAS/ FBP 120**	**CDAS/OFAS/ FBP 130**	**CDAS/OFAS/ FBP 140**	**CDAS/OFAS/ FBP 150**	**CDAS/OFAS/ FBP 160**	**CDAS/OFAS/ FBP 170**
4 bar	608620005	608620009	608620011	608620015	608620036	608620038	608620041	608620043
5 bar	608620006	608620010	608620012	608620026	608620037	608620040	608620043	608620045
6 bar	608620007	608620011	608620013	608620017	608620038	608620041	608620044	608620046
7 bar	608620007	608620011	608620014	608620018	608620039	608620042	608620045	608620047
8 bar	608620008	608620012	608620014	608620018	608620040	608620043	608620045	608620048
9 bar	608620008	608620012	608620015	608620019	608620040	608620043	608620046	608620049
10 bar	608620008	608620012	608620015	608620019	608620040	608620043	608620046	608620049
11 bar	608620008	608620012	608620015	608620019	608620041	608620044	608620047	608620049
12 bar	608620008	608620013	608620015	608620019	608620041	608620044	608620047	608620050
13 bar	608620008	608620013	608620016	608620020	608620041	608620044	608620047	608620050

50°C Inlet Temperature -40°C PDP								
Pressure	**CDAS/OFAS/ FBP 100**	**CDAS/OFAS/ FBP 110**	**CDAS/OFAS/ FBP 120**	**CDAS/OFAS/ FBP 130**	**CDAS/OFAS/ FBP 140**	**CDAS/OFAS/ FBP 150**	**CDAS/OFAS/ FBP 160**	**CDAS/OFAS/ FBP 170**
4 bar	608620004	608620007	608620010	608620013	608620033	608620036	608620038	608620040
5 bar	608620005	608620009	608620011	608620014	608620035	608620038	608620040	608620042
6 bar	608620006	608620009	608620012	608620015	608620036	608620039	608620041	608620044
7 bar	608620006	608620010	608620012	608620016	608620037	608620040	608620042	608620045
8 bar	608620007	608620010	608620013	608620016	608620038	608620040	608620043	608620046
9 bar	608620007	608620011	608620013	608620017	608620038	608620041	608620044	608620046
10 bar	608620007	608620011	608620013	608620017	608620038	608620041	608620044	608620047
11 bar	608620007	608620011	608620014	608620017	608620039	608620042	608620044	608620047
12 bar	608620007	608620011	608620014	608620018	608620039	608620042	608620045	608620047
13 bar	608620007	608620012	608620014	608620018	608620039	608620042	608620045	608620048

50°C Inlet Temperature -70°C PDP								
Pressure	**CDAS/OFAS/ FBP 100**	**CDAS/OFAS/ FBP 110**	**CDAS/OFAS/ FBP 120**	**CDAS/OFAS/ FBP 130**	**CDAS/OFAS/ FBP 140**	**CDAS/OFAS/ FBP 150**	**CDAS/OFAS/ FBP 160**	**CDAS/OFAS/ FBP 170**
4 bar	608620001	608620002	608620003	608620005	608620028	608620027	608620028	608620030
5 bar	608620001	608620003	608620005	608620007	608620028	608620029	608620031	608620033
6 bar	608620002	608620004	608620006	608620009	608620029	608620031	608620033	608620035
7 bar	608620002	608620005	608620007	608620010	608620030	608620032	608620034	608620036
8 bar	608620003	608620006	608620008	608620010	608620031	608620033	608620035	608620037
9 bar	608620003	608620006	608620008	608620011	608620031	608620034	608620036	608620038
10 bar	608620003	608620006	608620008	608620011	608620032	608620034	608620036	608620038
11 bar	608620004	608620007	608620009	608620012	608620032	608620035	608620037	608620039
12 bar	608620004	608620007	608620009	608620012	608620033	608620035	608620037	608620039
13 bar	608620004	608620007	608620009	608620012	608620033	608620035	608620038	608620040

K-MT Medium Flow Heatless Adsorption Dryers

Dryer Performance

Dryer Models	Dewpoint (Standard)		ISO8573-1:2010 Classification (Standard)	Dewpoint (Option 1)		ISO8573-1:2010 Classification (Option 1)	Dewpoint (Option 2)		ISO8573-1:2010 Classification (Option 2)
	°C	°F		°C	°F		°C	°F	
K-MT 10 - 95	-40	-40	Class 2:2:2	-70	-100	Class 2:1:2	-25	-13	Class 2:3:2

ISO8573-1 Classifications when used with Parker OIL-X pre/post filtration.

Technical Data

Dryer Models	Minimum Operating Pressure		Maximum Operating Pressure		Minimum Operating Temperature		Maximum Operating Temperature		Maximum Ambient Temperature		Electrical Supply (Standard)	Electrical Supply (Optional)	Thread Type	Noise Level
	bar g	psi g	bar g	psi g	°C	°F	°C	°F	°C	°F				dB(A)
K-MT 10 - 95	4	58	16	232	5	41	50	122	50	122	230V 1ph 50/60Hz	115V 1ph 50/60Hz or 24V DC	BSPP	65-86

Flow Rates

Model	Pipe Size	Inlet Flow Rate			
		L/s	m^3/min	m^3/h	cfm
K-MT 10	1"	30	1.8	105	62
K-MT 15	1"	40	2.4	145	85
K-MT 20	1"	56	3.3	200	118
K-MT 25	1½"	70	4.3	255	150
K-MT 35	1½"	97	5.8	350	206
K-MT 45	1½"	117	7	420	247
K-MT 60	2"	172	10.3	620	365
K-MT 75	2"	208	12.5	750	441
K-MT 95	2½"	261	15.7	940	553

Inlet flow rate relating to 1 bar(a) and 20°C; relating to the suction performance of the compressor, compression at 7 bar(g) and 35°C dryer inlet temperature, at 25°C ambient temperature, 60% relative humidity.

Product Selection & Correction Factors

For correct operation, compressed air dryers must be sized using for the maximum (summer) inlet temperature, maximum (summer) ambient temperature, minimum inlet pressure, required outlet dewpoint and maximum flow rate of the installation.

To select a dryer, first calculate the MDC (Minimum Drying Capacity) using the formula below then select a dryer from the flow rate table above with a flow rate equal to or above the MDC.

Minimum Drying Capacity = System Flow x CFIT x CFAT x CFMIP x CFOD

CFIT - Correction Factor Maximum Inlet Temperature

Maximum Inlet Temperature	°C	25	30	35	40	45	50
	°F	77	86	95	104	113	122
Correction Factor		0.94	0.95	1.00	1.15	1.22	1.28

CFAT - Correction Factor Maximum Ambient Temperature

Maximum Ambient Temperature	°C	25	30	35	40	45	50
	°F	77	86	95	104	113	122
Correction Factor		1.00	1.00	1.00	1.00	1.00	1.00

CFMIP - Correction Factor Minimum Inlet Pressure

Minimum Inlet Pressure	bar g	4	5	6	7	8	9	10	11	12	13	14	15	16
	psi g	58	73	87	100	116	131	145	160	174	189	203	218	232
Correction Factor		1.60	1.33	1.12	1.00	0.88	0.79	0.76	0.74	0.67	0.62	0.59	0.56	0.53

CFOD - Correction Factor Outlet Dewpoint

Outlet Dewpoint	°C	-25	-40	-70
	°F	-13	-40	-100
Correction Factor		1.00	1.00	2.00

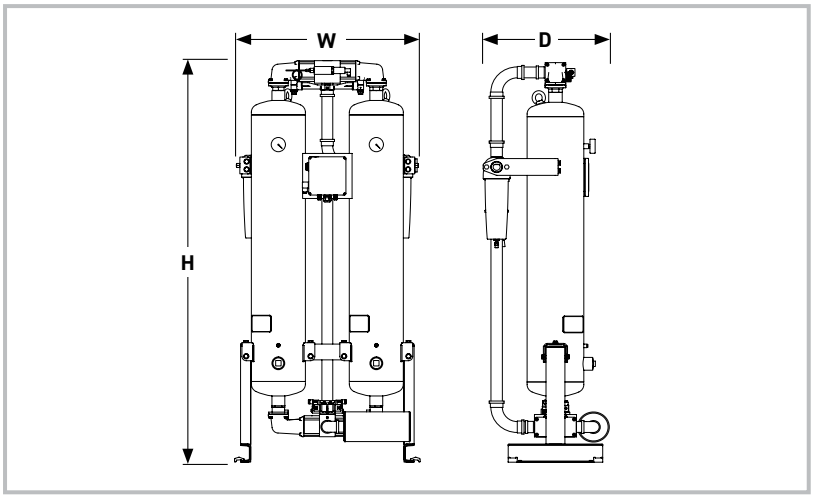

Weights & Dimensions

Model	Dimensions						Weight	
	Height (H)		Width (W)		Depth (D)			
	mm	ins	mm	ins	mm	ins	kg	lbs
K-MT 10	1411	56	814	32	466	18	120	264
K-MT 15	1740	69	814	32	466	18	138	304
K-MT 20	1515	60	645	25	466	18	143	315
K-MT 25	1735	68	645	25	506	20	173	381
K-MT 35	1783	70	778	3	534	21	210	463
K-MT 45	1808	71	807	32	555	22	249	549
K-MT 60	1847	73	857	34	607	24	277	610
K-MT 75	1980	78	952	37	628	25	408	899
K-MT 95	2001	79	998	39	658	26	510	1125

Filtration (Included/Required)

Model	Pipe Size BSPP	Dryer Inlet			Dryer Outlet		
		Required	Required	Included	Not Included	Included	Not Included
		Liquid Separator	General Purpose Pre-filter	High Efficiency Filter	Oil Vapour Reduction Filter	General Purpose Dry Particulate Filter	High Efficiency Dry Particulate Filter
K-MT 10	1"	WSPX025ET1X	AOPX025E	AAPX025E	-	AOPX025E	-
K-MT 15	1"	WSPX025ET1X	AOPX025E	AAPX025E	-	AOPX025E	-
K-MT 20	1"	WSPX025ET1X	AOPX025E	AAPX025E	-	AOPX025E	-
K-MT 25	1½"	WSPX030GT1X	AOPX030G	AAPX030G	-	AOPX030G	-
K-MT 35	1½"	WSPX030GT1X	AOPX030G	AAPX030G	-	AOPX030G	-
K-MT 45	1½"	WSPX035T1X	AOPX035G	AAPX035G	-	AOPX035G	-
K-MT 60	2"	WSPX040HT1X	AOPX040H	AAPX040H	-	AOPX040H	-
K-MT 75	2"	WSPX040HT1X	AOPX040H	AAPX040H	-	AOPX040H	-
K-MT 95	2½"	WSPX045IT1X	AOPX045I	AAPX045I	-	AOPX045I	-

Parker Catalogue Numbers 230V/1ph/50Hz-60Hz

Model	No Dewpoint Sensor	With Dewpoint Sensor
K-MT 10	K10/16D3-G230M	K10/16D3-G230MT
K-MT 15	K15/16D3-G230M	K15/16D3-G230MT
K-MT 20	K20/16D3-G230M	K20/16D3-G230MT
K-MT 25	K25/16D3-G230M	K25/16D3-G230MT
K-MT 35	K35/16D3-G230M	K35/16D3-G230MT
K-MT 45	K45/16D3-G230M	K45/16D3-G230MT
K-MT 60	K60/16D3-G230M	K60/16D3-G230MT
K-MT 75	K75/16D3-G230M	K75/16D3-G230MT
K-MT 95	K95/16D3-G230M	K95/16D3-G230MT

KA-MT Medium Flow Heatless Adsorption Dryers

Dryer Performance

Dryer Models	Dewpoint (Standard)		ISO8573-1:2010 Classification (Standard)	Dewpoint (Option 1)		ISO8573-1:2010 Classification (Option 1)	Dewpoint (Option 2)		ISO8573-1:2010 Classification (Option 2)
	°C	°F		°C	°F		°C	°F	
KA-MT 10 - 95	-40	-40	Class 2:2:1	-70	-100	Class 2:2:1	-25	-13	Class 2.3.1

ISO8573-1 Classifications when used with Parker OIL-X pre/post filtration.

Technical Data

Dryer Models	Minimum Operating Pressure		Maximum Operating Pressure		Minimum Operating Temperature		Maximum Operating Temperature		Maximum Ambient Temperature		Electrical Supply (Standard)	Electrical Supply (Optional)	Thread Type	Noise Level
	bar g	psi g	bar g	psi g	°C	°F	°C	°F	°C	°F				dB(A)
KA-MT 10 - 95	4	58	16	232	5	41	50	122	50	122	230V 1ph 50/60Hz	115V 1ph 50/60Hz or 24V DC	BSPP	65-86

Flow Rates

Model	Pipe Size	Inlet Flow Rate			
		L/s	m³/min	m³/h	cfm
KA-MT 10	1"	30	1.8	105	62
KA-MT 15	1"	40	2.4	145	85
KA-MT 20	1"	56	3.3	200	118
KA-MT 25	1½"	70	4.3	255	150
KA-MT 35	1½"	97	5.8	350	206
KA-MT 45	1½"	117	7	420	247
KA-MT 60	2"	172	10.3	620	365
KA-MT 75	2"	208	12.5	750	441
KA-MT 95	2½"	261	15.7	940	553

Inlet flow rate relating to 1 bar(a) and 20°C; relating to the suction performance of the compressor, compression at 7 bar(g) and 35°C dryer inlet temperature, at 25°C ambient temperature, 60% relative humidity.

Product Selection & Correction Factors

For correct operation, compressed air dryers must be sized using for the maximum (summer) inlet temperature, maximum (summer) ambient temperature, minimum inlet pressure, required outlet dewpoint and maximum flow rate of the installation.

To select a dryer, first calculate the MDC (Minimum Drying Capacity) using the formula below then select a dryer from the flow rate table above with a flow rate equal to or above the MDC.

Minimum Drying Capacity = System Flow x CFIT x CFAT x CFMIP x CFOD

CFIT - Correction Factor Maximum Inlet Temperature

Maximum Inlet Temperature	°C	25	30	35	40	45	50
	°F	77	86	95	104	113	122
Correction Factor		0.94	0.95	1.00	1.15	1.22	1.28

CFAT - Correction Factor Maximum Ambient Temperature

Maximum Ambient Temperature	°C	25	30	35	40	45	50
	°F	77	86	95	104	113	122
Correction Factor		1.00	1.00	1.00	1.00	1.00	1.00

CFMIP - Correction Factor Minimum Inlet Pressure

Minimum Inlet Pressure	bar g	4	5	6	7	8	9	10	11	12	13	14	15	16
	psi g	58	73	87	100	116	131	145	160	174	189	203	218	232
Correction Factor		1.60	1.33	1.12	1.00	0.88	0.79	0.76	0.74	0.67	0.62	0.59	0.56	0.53

CFOD - Correction Factor Outlet Dewpoint

Outlet Dewpoint	°C	-25	-40	-70
	°F	-13	-40	-100
Correction Factor		1.00	1.00	2.00

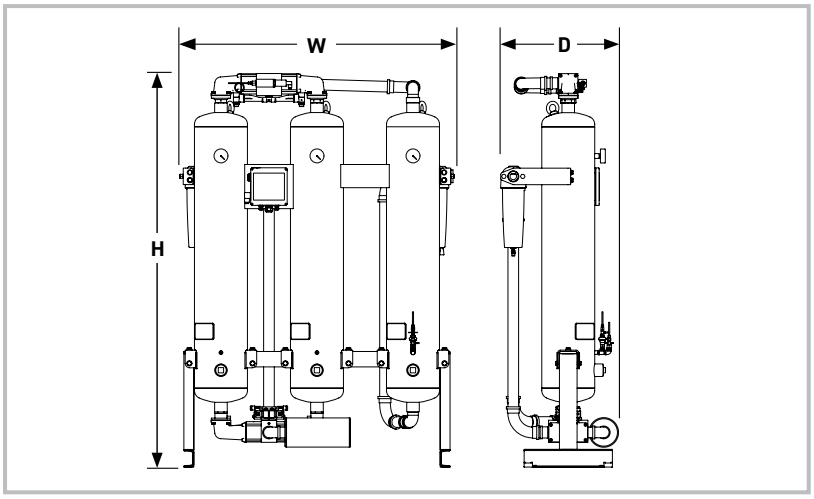

Weights & Dimensions

Model	Dimensions						Weight	
	Height (H)		Width (W)		Depth (D)			
	mm	ins	mm	ins	mm	ins	kg	lbs
KA-MT 10	1411	56	1118	44	466	18	161	355
KA-MT 15	1739	68	1118	44	466	18	193	425
KA-MT 20	1515	60	949	37	466	18	193	425
KA-MT 25	1735	68	926	36	506	20	234	516
KA-MT 35	1783	70	1213	47	534	21	283	624
KA-MT 45	1808	71	1245	49	555	22	334	736
KA-MT 60	1859	73	1292	51	607	24	428	944
KA-MT 75	1980	78	1447	57	628	25	555	1224
KA-MT 95	2001	79	1493	59	658	26	698	1539

Filtration (Included/Required)

Model	Pipe Size BSPP	Dryer Inlet			Dryer Outlet		
		Required	Required	Included	Included	Included	Not Included
		Liquid Separator	General Purpose Pre-filter	High Efficiency Filter	Oil Vapour Reduction Filter	General Purpose Dry Particulate Filter	High Efficiency Dry Particulate Filter
KA-MT 10	1"	WSPX025ET1X	AOPX025E	AAPX025E	Integrated	AOPX025E	-
KA-MT 15	1"	WSPX025ET1X	AOPX025E	AAPX025E	Integrated	AOPX025E	-
KA-MT 20	1"	WSPX025ET1X	AOPX025E	AAPX025E	Integrated	AOPX025E	-
KA-MT 25	1½"	WSPX030GT1X	AOPX030G	AAPX030G	Integrated	AOPX030G	-
KA-MT 35	1½"	WSPX030GT1X	AOPX030G	AAPX030G	Integrated	AOPX030G	-
KA-MT 45	1½"	WSPX035T1X	AOPX035G	AAPX035G	Integrated	AOPX035G	-
KA-MT 60	2"	WSPX040HT1X	AOPX040H	AAPX040H	Integrated	AOPX040H	-
KA-MT 75	2"	WSPX040HT1X	AOPX040H	AAPX040H	Integrated	AOPX040H	-
KA-MT 95	2½"	WSPX045IT1X	AOPX045I	AAPX045I	Integrated	AOPX045I	-

Parker Catalogue Numbers 230V/1ph/50Hz-60Hz

Model	No Dewpoint Sensor	With Dewpoint Sensor
KA-MT 10	K10/16DA3-G230M	K10/16DA3-G230MT
KA-MT 15	K15/16DA3-G230M	K15/16DA3-G230MT
KA-MT 20	K20/16DA3-G230M	K20/16DA3-G230MT
KA-MT 25	K25/16DA3-G230M	K25/16DA3-G230MT
KA-MT 35	K35/16DA3-G230M	K35/16DA3-G230MT
KA-MT 45	K45/16DA3-G230M	K45/16DA3-G230MT
KA-MT 60	K60/16DA3-G230M	K60/16DA3-G230MT
KA-MT 75	K75/16DA3-G230M	K75/16DA3-G230MT
KA-MT 95	K95/16DA3-G230M	K95/16DA3-G230MT

KE-MT Large Flow Heatless Adsorption Dryers

Dryer Performance

Dryer Models	Dewpoint (Standard)		ISO8573-1:2010 Classification (Standard)	Dewpoint (Option 1)		ISO8573-1:2010 Classification (Option 1)	Dewpoint (Option 2)		ISO8573-1:2010 Classification (Option 2)
	°C	°F		°C	°F		°C	°F	
KE-MT 120 - 600	-40	-40	Class 2:2:2	-70	-100	Class 2:1:2	-20	-4	Class 2:3:2

ISO8573-1 Classifications when used with Parker OIL-X pre/post filtration.

Technical Data

Dryer Models	Minimum Operating Pressure		Maximum Operating Pressure		Minimum Operating Temperature		Maximum Operating Temperature		Maximum Ambient Temperature		Electrical Supply (Standard)	Electrical Supply (Optional)	Thread Type	Noise Level
	bar g	psi g	bar g	psi g	°C	°F	°C	°F	°C	°F				dB(A)
KE-MT 120 - 600	4	58	10*	145	5	41	50	122	50	122	230V 1ph 50Hz/60Hz	115V 1ph 50/60Hz	Flange	<120

*Higher operating pressures on request.

Flow Rates

Model	Pipe Size	Inlet Flow Rate			
		L/s	m^3/min	m^3/hr	cfm
KE-MT 120	DN 50	333	20	1200	706
KE-MT 150	DN 65	430	26	1550	912
KE-MT 200	DN 65	556	33	2000	1177
KE-MT 250	DN 80	695	42	2500	1472
KE-MT 300	DN 80	833	50	3000	1766
KE-MT 380	DN 100	1056	63	3800	2237
KE-MT 500	DN 100	1347	81	4850	2855
KE-MT 600	DN 125	1695	102	6100	3590

Stated flows are for operation at 7 bar (g) (102 psi g) with reference to 20°C, 1 bar (a), 0% relative water vapour pressure. For flows at other pressures, apply the correction factors shown below.

Dryers for smaller flows are available on request.

Product Selection & Correction Factors

For correct operation, compressed air dryers must be sized using for the maximum (summer) inlet temperature, maximum (summer) ambient temperature, minimum inlet pressure, required outlet dewpoint and maximum flow rate of the installation.

To select a dryer, first calculate the MDC (Minimum Drying Capacity) using the formula below then select a dryer from the flow rate table above with a flow rate equal to or above the MDC.

Minimum Drying Capacity = System Flow x CFIT x CFAT x CFMIP x CFOD

CFIT - Correction Factor Maximum Inlet Temperature

Maximum Inlet Temperature	°C	25	30	35	40	45	50
	°F	77	86	95	104	113	122
Correction Factor		0.94	0.95	1.00	1.15	1.22	1.28

CFAT - Correction Factor Maximum Ambient Temperature

Maximum Ambient Temperature	°C	25	30	35	40	45	50
	°F	77	86	95	104	113	122
Correction Factor		1.00	1.00	1.00	1.00	1.00	1.00

CFMIP - Correction Factor Minimum Inlet Pressure

Minimum Inlet Pressure	bar g	4	5	6	7	8	9	10
	psi g	58	73	87	100	116	131	145
Correction Factor		1.60	1.33	1.12	1.00	0.88	0.79	0.76

CFOD - Correction Factor Outlet Dewpoint

Outlet Dewpoint	°C	-25	-40	-70
	°F	-13	-40	-100
Correction Factor		1.00	1.00	2.00

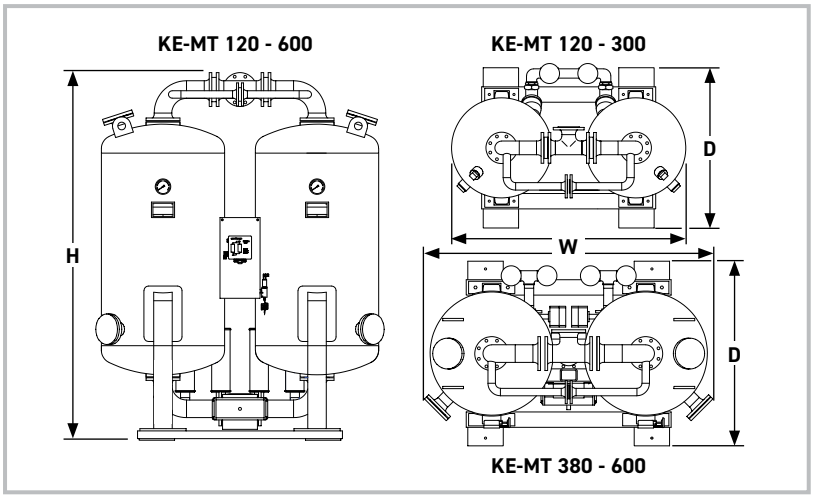

Weights & Dimensions - KE-MT 120-600

Model	Dimensions						Weight	
	Height (H)		Width (W)		Depth (D)			
	mm	ins	mm	ins	mm	ins	kg	lbs
KE-MT 120	2080	82	1060	42	840	33	640	1411
KE-MT 150	2120	83	1270	50	900	35	830	1830
KE-MT 200	2160	85	1350	53	990	39	955	2106
KE-MT 250	2210	87	1530	60	1040	41	1075	2370
KE-MT 300	2255	88	1600	62	1100	43	1500	3307
KE-MT 380	2385	93	1875	73	1200	47	1990	4388
KE-MT 500	2660	104	1925	76	1250	49	2410	5314
KE-MT 600	2816	111	2155	85	1304	51	2700	5953

Filtration (Included/Required)

Model	Pipe Size BSPP/DIN Flange	Dryer Inlet			Dryer Outlet		
		Required	Required	Included	Not Included	Included	Not Included
		Liquid Separator	General Purpose Pre-filter	High Efficiency Filter	Oil Vapour Reduction Filter	General Purpose Dry Particulate Filter	High Efficiency Dry Particulate Filter
KE-MT 120	2½"/2½"	WSPX050IT1X	AOPX050I	AAPX050I	A120	AOPX050I	-
KE-MT 150	2½"/2½"	WSPX050IT1X	AOPX050I	AAPX050I	A160	AOPX050I	-
KE-MT 200	2½"/ 2½"	WSPX050IT1X	AOPX055I	AAPX055I	A200	AOPX055I	-
KE-MT 250	DN 100 / DN 100	SFH037	AO070O	AA070O	A250	AO070O	-
KE-MT 300	DN 125 / DN 100	SFH066	AO070O	AA070O	A300	AO070O	-
KE-MT 380	DN 125 / DN 100	SFH066	AO070O	AA070O	A380	AO070O	-
KE-MT 500	DN 150 / DN 150	SFH088	AO075P	AA075P	A500	AO075P	-
KE-MT 600	DN 200 / DN 200	SFH097	AO075P	AA075P	A600	AO075P	-

*KE-MT are supplied as a dryer only and do not include filtration. WS/SFH liquid separators, AO/AA Coalescing filters and AO dry particulate filters are mandatory and must be ordered separately. Note: Liquid separator and filtration matched to dryer flow rates (pipe connections may not match exactly).

Parker Catalogue Numbers 230V/1ph/50Hz-60Hz

Model	No Dewpoint Control	With Dewpoint Control
KE-MT 120	K120/10D1-F230M	K120/10D1-F230MT
KE-MT 150	K150/10D1-F230M	K150/10D1-F230MT
KE-MT 200	K200/10D1-F230M	K200/10D1-F230MT
KE-MT 250	K250/10D1-F230M	K250/10D1-F230MT
KE-MT 300	K300/10D1-F230M	K300/10D1-F230MT
KE-MT 380	K380/10D1-F230M	K380/10D1-F230MT
KE-MT 500	K500/10D1-F230M	K500/10D1-F230MT
KE-MT 600	K600/10D1-F230M	K600/10D1-F230MT

WVM Large Flow Vacuum Low Energy Adsorption Dryers

Dryer Performance

Dryer Models	Dewpoint (Standard)		ISO8573-1:2010 Classification (Standard)	Dewpoint (Option 1)		ISO8573-1:2010 Classification (Option 1)	Dewpoint (Option 2)		ISO8573-1:2010 Classification (Option 2)
	°C	°F		°C	°F		°C	°F	
WVM	-40	-40	Class 2:2:2	-70	-100	Class 2:1:2	-20	-4	Class 2:3:2

ISO8573-1 Classifications when used with OIL-X pre/post filtration.

Technical Data

Dryer Models	Minimum Operating Pressure		Maximum Operating Pressure*		Minimum Operating Temperature		Maximum Operating Temperature		Maximum Ambient Temperature		Electrical Supply (Standard)	Electrical Supply (Optional)	Connection	Noise Level
	bar g	psi g	bar g	psi g	°C	°F	°C	°F	°C	°F				dB(A)
WVM 45 - 750	4	58	11	145	5	41	40	104	40	104	400V 3ph 50Hz	On request	Flange	80-85

*For higher operating pressure please contact Parker GSFE Division.

Flow Rates

Model	Pipe Size	Inlet Flow Rate				Average Power kW
		L/s	m³/min	m³/hr	cfm	
WVM 45	DN 50	125	7.5	450	265	3.6
WVM 60	DN 50	169	10.2	610	359	5.3
WVM 80	DN 50	222	13.4	800	471	6.8
WVM 125	DN 80	325	19.5	1170	689	9.5
WVM 155	DN 80	408	24.5	1470	865	12.8
WVM 210	DN 80	569	34.2	2050	1207	16.8
WVM 310	DN 100	847	50.9	3050	1795	25.4
WVM 370	DN 100	1028	61.8	3700	2178	30.8
WVM 520	DN 150	1403	84.3	5050	2972	41.8
WVM 615	DN 150	1681	101.0	6050	3561	52.6
WVM 750	DN 150	2028	121.9	7300	4297	59.5

Inlet flow rate relating to 1 bar(a) and 20°C; relating to the suction performance of the compressor, compression at 7 bar(g) and 35°C dryer inlet temperature, at 25°C ambient temperature, 60% relative humidity.

Product Selection & Correction Factors

For correct operation, compressed air dryers must be sized using for the maximum inlet temperature, maximum ambient temperature, minimum inlet pressure, required outlet dewpoint and maximum flow rate of the installation.

To select a dryer, first calculate the MDC (Minimum Drying Capacity) using the formula below then select a dryer from the flow rate table above with a flow rate equal to or above the MDC.

Minimum Drying Capacity = System Flow x CFMIT x CFMAT x CFMIP x CFOD

CFMIT - Correction Factor Maximum Inlet Temperature

Maximum Inlet Temperature	°C	25	30	35	40
	°F	77	86	95	104
Correction Factor		0.80	0.91	1.00	1.80

CFAT - Correction Factor Maximum Ambient Temperature

Maximum Ambient Temperature	°C	20	25	30	35	40
	°F	68	77	86	95	104
Correction Factor		1.00	1.00	1.00	1.00	1.00

25% rel. hum. at 40°C; 37% rel. hum. at 35°C; 50% rel. hum. at 30°C; 70% rel. hum. at 25°C; 90% rel. hum. at 20°C.

For higher ambient temperature and/or higher relative humidity please contact Parker GSFE Division.

CFMIP - Correction Factor Minimum Inlet Pressure

Minimum Inlet Pressure	bar g	4	5	6	7	8	9	10	11
	psi g	58	73	87	100	116	131	145	160
Correction Factor		2.00	1.39	1.18	1.00	0.99	0.87	0.79	0.56

CFOD - Correction Factor Outlet Dewpoint

Outlet Dewpoint	°C	-20	-25	-40	-70
	°F	-4	-13	-40	-100
Correction Factor		0.95	0.95	1.00	*

*Selection for Dewpoint -70°C - Please contact Parker GSFE Division.

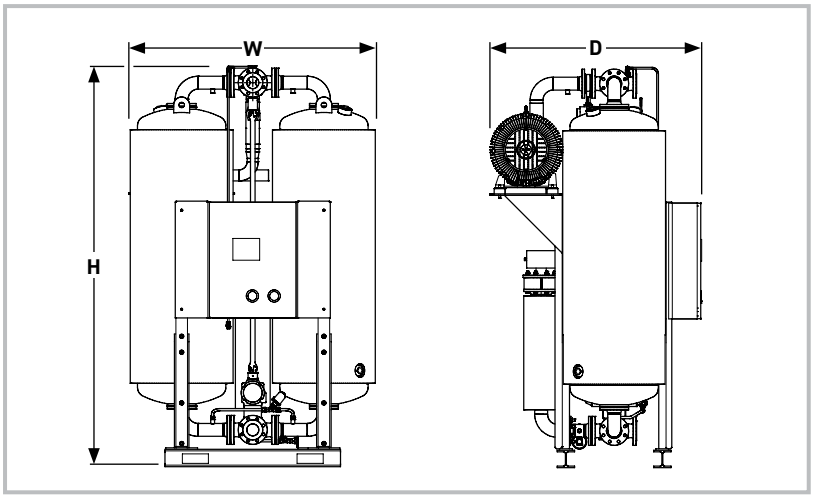

Weights & Dimensions

Model	Dimensions (Dryer Only)						Weight (Dryer Only)	
	Height (H)		Width (W)		Depth (D)			
	mm	ins	mm	ins	mm	ins	kg	lbs
WVM 45	2029	80	1222	48	1219	48	770	1698
WVM 60	2029	80	1222	48	1219	48	800	1764
WVM 80	2379	94	1222	48	1219	48	900	1985
WVM 125	2151	85	1692	67	1412	56	1350	2977
WVM 155	2301	91	1692	67	1412	56	1460	3219
WVM 210	2751	108	1692	67	1462	58	1870	4123
WVM 310	2692	106	2115	83	1702	67	2610	5755
WVM 370	2992	118	2115	83	1702	67	2900	6395
WVM 520	3210	126	2582	102	1910	75	4275	9426
WVM 615	3460	136	2582	102	1910	75	4735	10441
WVM 750	3450	137	2782	110	2010	79	5380	11863

Filtration* (Included/Required)

Model	Pipe Size BSPP/DIN Flange	Dryer Inlet		Dryer Outlet		
		Required		Optional	Required	Not Included
		General Purpose Coalescing Filter	High Efficiency Coalescing Filter	Oil Vapour Reduction Filter	General Purpose Dry Particulate Filter	High Efficiency Dry Particulate Filter
WVM 45	2"	AOPX040H	AAPX040H	Special AK_W on request Contact Parker	AOPX040H	-
WVM 60	2"	AOPX040H	AAPX040H		AOPX040H	-
WVM 80	2"	AOPX040H	AAPX040H		AOPX040H	-
WVM 125	DN 80	AO065N	AA065N		AO065N	-
WVM 155	DN 80	AO065N	AA065N		AO065N	-
WVM 210	DN 80	AO065N	AA065N		AO065N	-
WVM 310	DN 100	AO070O	AA070O		AO070O	-
WVM 370	DN 100	AO070O	AA070O		AO070O	-
WVM 520	DN 150	AO075P	AA075P		AO075P	AA075P
WVM 615	DN 150	AO075P	AA075P		AO075P	AA075P
WVM 750	DN 150	AO080P	AA080P		AO080P	AA080P

*WVM dryers do not include filtration. AO/AA coalescing filters and AO dry particulate filters are mandatory and must be ordered separately.

Parker Catalogue Numbers

Model	Standard	Model	Standard
WVM 45	W45/11VM5-F400CT	**WVM 310**	W310/11VM5-F400CT
WVM 60	W60/11VM5-F400CT	**WVM 370**	W370/11VM5-F400CT
WVM 80	W80/11VM5-F400CT	**WVM 520**	W520/11VM5-F400CT
WVM 125	W125/11VM5-F400CT	**WVM 615**	W615/11VM5-F400CT
WVM 155	W155/11VM5-F400CT	**WVM 750**	W750/11VM5-F400CT
WVM 210	W210/11VM5-F400CT		

ATT+ Green Hybrid Low Energy Dryers

Dryer Performance

Dryer Models	Dewpoint (Standard)		ISO8573-1:2010 Classification (Standard)	Dewpoint (Option 1)		ISO8573-1:2010 Classification (Option 1)	Dewpoint (Option 2)		ISO8573-1:2010 Classification (Option 2)
	°C	°F		°C	°F		°C	°F	
ATT+	-40	-40	Class 2:2:2	-70	-100	Class 2:1:2	-20	-4	Class 2:3:2

ISO8573-1 Classifications when used with OIL-X pre/post filtration.

Technical Data

Dryer Models	Minimum Operating Pressure		Maximum Operating Pressure		Minimum Operating Temperature		Maximum Operating Temperature		Maximum Ambient Temperature		Electrical Supply (Standard)	Electrical Supply (Optional)	Thread Type	Noise Level
	bar g	psi g	bar g	psi g	°C	°F	°C	°F	°C	°F				dB(A)
ATT+ 060/090	2	29	12	174	5	41	65	149	50	122	230V 1ph 50Hz	N/A	BSPP	<75
ATT+ 140	2	29	12	174	5	41	65	149	50	122	400V 3ph 50Hz	N/A	BSPP	<75
ATT+ 260/340	4	58	12	174	5	41	65	149	50	122	400V 3ph 50Hz	N/A	BSPP	<75

Flow Rates

Dryer Models	Pipe Size	Inlet Flow Rate				Average Power kW
		L/s	m^3/min	m^3/hr	cfm	
ATT+ 060	1½"	100	6	360	212	1.9
ATT+ 090	1½"	150	9	540	318	2.3
ATT+ 140	2"	233	14	840	494	2.6
ATT+ 260	2½"	433	26	1560	918	4.2
ATT+ 340	2½"	567	34	2040	1200	5.6

Stated flows are for operation at 7 bar (g) (102 psi g) with reference to 20°C, 1 bar (a), 0% relative water vapour pressure. For flows at other pressures, apply the correction factors shown below.

Product Selection & Correction Factors

For correct operation, compressed air dryers must be sized using for the maximum (summer) inlet temperature, maximum (summer) ambient temperature, minimum inlet pressure, required outlet dewpoint and maximum flow rate of the installation.

To select a dryer, first calculate the MDC (Minimum Drying Capacity) using the formula below then select a dryer from the flow rate table above with a flow rate equal to or above the MDC.

Minimum Drying Capacity = System Flow x CFIT x CFAT x CFMIP x CFOD

CFIT - Correction Factor Maximum Inlet Temperature

Maximum Inlet Temperature	°C	25	30	35	40	45	50	55	60	65
	°F	77	86	95	104	113	122	131	140	149
Correction Factor ATT+		0.82	0.82	1.00	1.23	1.45	1.82	2.44	2.63	2.94

CFAT - Correction Factor Maximum Ambient Temperature

Maximum Ambient Temperature	°C	20	25	30	35	40	45	50
	°F	68	77	86	95	104	113	122
Correction Factor ATT+ 060/090		0.93	1.00	1.06	1.14	1.23	1.33	1.47
Correction Factor ATT+ 140/260/340		0.94	1.00	1.05	1.11	1.20	1.30	1.39

CFMIP - Correction Factor Minimum Inlet Pressure

Minimum Inlet Pressure	bar g	4	5	6	7	8	9	10	11	12	13	14	15	16
	psi g	58	73	87	100	116	131	145	160	174	189	203	218	232
Correction Factor ATT+		1.61	1.33	1.15	1.00	0.96	0.93	0.91	0.88	0.87	N/A	N/A	N/A	N/A

CFOD - Correction Factor Outlet Dewpoint

Outlet Dewpoint	°C	-20	-40	-70
	°F	-4	-40	-100
Correction Factor		1	1	1

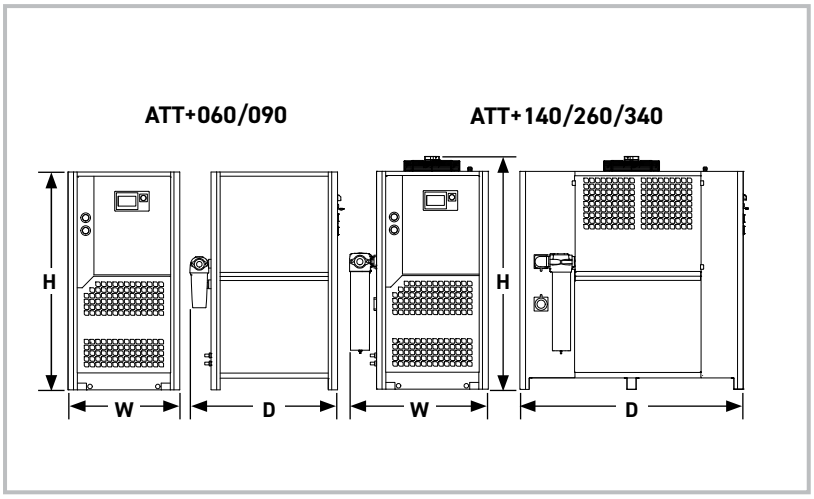

Controller Main Functions

Hybrid Dryer	Controller Function												
	Touchscreen	Visual Fault Indication	Service Indicator	EST - Energy Saving Technology	Visual Operation Status (Strip LED)	Power On Indication	Dewpoint Display	Alarm History	0-10V / 4-20mA Dewpoint Re-transmission	Data Log/ Retrieve*	Local Web Server	Modbus Protocol**	IOT Ready
ATT+	7"	•	•	•	•	•	•	•	•	•	•	•	•

*USB **RTU RS485 TCP/IP RJ45

Weights & Dimensions

Model	Dimensions (with Filters)						Weight (with Filters)	
	Height (H)		Width (W)		Depth (D)			
	mm	ins	mm	ins	mm	ins	kg	lbs
ATT+ 060	1900	74.8	973	38.3	1312	51.7	380	838
ATT+ 090	1900	74.8	973	38.3	1312	51.7	420	926
ATT+ 140	2030	79.9	1180	46.5	1974	77.7	650	1433
ATT+ 260	2030	79.9	1205	47.4	1974	77.7	920	2028
ATT+ 340	2030	79.9	1205	47.4	1974	77.7	960	2116

Filtration (Included/Required)

Model	Pipe Size BSPP	Dryer Inlet			Dryer Outlet		
		Required	Included	Included	Not Included	Included	Not Included
		Liquid Separator	General Purpose Pre-filter	High Efficiency Filter	Oil Vapour Reduction Filter	General Purpose Dry Particulate Filter	High Efficiency Dry Particulate Filter
ATT+ 060	1½"	WSPX030GFX	AOPX030G	AAPX030G	-	AOPX030G	-
ATT+ 090	1½"	WSPX035GFX	AOPX035G	AAPX035G	-	AOPX035G	-
ATT+140	2"	WSPX045IFX	AOPX045I	AAPX045I	-	AOPX045I	-
ATT+ 260	2½"	WSPX055JFX	AOPX055J	AAPX055J	-	AOPX055J	-
ATT+ 340	2½"	WSPX055JFX	AOPX055J	AAPX055J	-	AOPX055J	-

Parker Catalogue Numbers

Model	Standard	With Bypass	With Bypass & Temperature Probe	With Temperature Probe
ATT+ 060	ATT060+A23015012EITS	ATT060+A23015012EITSTB	ATT060+A23015012EITSTBTP	ATT060+A23015012EITSTP
ATT+ 090	ATT090+A23015012EITS	ATT090+A23015012EITSTB	ATT090+A23015012EITSTBTP	ATT090+A23015012EITSTP
ATT+ 140	ATT140+A40035012EITS	ATT140+A40035012EITSTB	ATT140+A40035012EITSTBTP	ATT140+A40035012EITSTP
ATT+ 260	ATT260+A40035012EITS	ATT260+A40035012EITSTB	ATT260+A40035012EITSTBTP	ATT260+A40035012EITSTP
ATT+ 340	ATT340+A40035012EITS	ATT340+A40035012EITSTB	ATT340+A40035012EITSTBTP	ATT340+A40035012EITSTP

SPS Direct Expansion Refrigeration Dryers

Dryer Performance

Dryer Models	Dewpoint (Standard)		Dewpoint (Option 1)		Dewpoint (Option 2)	
	°C	°F	°C	°F	°C	°F
SPS	+3	+37	+7	+45	+10	+50

Technical Data

Dryer Models	Minimum Operating Pressure		Maximum Operating Pressure		Minimum Operating Temperature		Maximum Operating Temperature		Maximm Ambient Temperature		Electrical Supply (Standard)	Electrical Supply (Optional)	Thread Type	Noise Level
	bar g	psi g	bar g	psi g	°C	°F	°C	°F	°C	°F				dB(A)
SPS 004-062	2	29	16	232	5	41	65	149	50	122	230V 1ph 50Hz / 60Hz	N/A	BSPP	<75
SPS 080-100			14	203										

Flow Rates

Model	Pipe Size	Inlet Flow Rate 50 Hz				50Hz kW	Inlet Flow Rate 60Hz				60Hz kW
		L/s	m³/min	m³/hr	cfm		L/s	m³/min	m³/hr	cfm	
SPS 004	½"	7	0.4	24	14	0.13	8	0.47	28	16	0.16
SPS 007	½"	12	0.7	42	25	0.14	13	0.78	47	28	0.17
SPS 009	½"	15	0.9	54	32	0.15	17	1.00	60	35	0.19
SPS 014	¾"	23	1.4	84	49	0.15	27	1.60	96	57	0.18
SPS 018	¾"	30	1.8	108	64	0.16	34	2.07	124	73	0.20
SPS 026	1"	43	2.6	156	92	0.29	49	2.93	176	104	0.36
SPS 032	1"	53	3.2	192	113	0.30	61	3.63	218	128	0.37
SPS 040	1"	67	4.0	240	141	0.31	76	4.53	272	160	0.38
SPS 052	1½"	87	5.2	312	184	0.46	100	6.02	361	212	0.56
SPS 062	1½"	103	6.2	372	219	0.57	119	7.15	429	253	0.69
SPS 080	1½"	133	8.0	480	282	0.73	154	9.25	555	327	0.90
SPS 100	1½"	167	10.0	600	353	0.74	191	11.48	689	406	0.91

Stated flows are for operation at 7 bar (g) (102 psi g) with reference to 20°C, 1 bar (a), 0% relative water vapour pressure, 25°C cooling air temperature, 35°C air inlet temperature and +3°C pressure dewpoint. All models supplied with low GWP refrigerant R513A.

For flows at other conditions, apply the correction factors shown below.

Product Selection & Correction Factors

For correct operation, compressed air dryers must be sized using for the maximum (summer) inlet temperature, maximum (summer) ambient temperature, minimum inlet pressure, required outlet dewpoint and maximum flow rate of the installation.

To select a dryer, first calculate the MDC (Minimum Drying Capacity) using the formula below then select a dryer from the flow rate table above with a flow rate equal to or above the MDC.

Minimum Drying Capacity = System Flow x CFIT x CFAT x CFMIP x CFOD

CFIT - Correction Factor Maximum Inlet Temperature

Maximum Inlet Temperature	°C	25	30	35	40	45	50	55	60	65
	°F	77	86	95	104	113	122	131	140	149
Correction Factor	50Hz	0.65	0.83	1.00	1.30	1.61	2.00	2.33	2.38	2.50
	60Hz	0.66	0.85	1.00	1.32	1.61	2.04	2.56	2.63	2.78

CFAT - Correction Factor Maximum Ambient Temperature

Maximum Ambient Temperature	°C	20	25	30	35	40	45	50
	°F	68	77	86	95	104	113	122
Correction Factor	50Hz	0.93	1.00	1.02	1.09	1.15	1.22	1.28
	60Hz	0.96	1.00	1.06	1.11	1.18	1.25	1.33

CFMIP - Correction Factor Minimum Inlet Pressure

Minimum Inlet Pressure	bar g	3	4	5	6	7	8	9	10	11	12	13	14	15	16
	psi g	44	58	73	87	100	116	131	145	160	174	189	203	218	232
Correction Factor	50Hz	1.35	1.23	1.11	1.06	1.00	0.93	0.85	0.83	0.81	0.79	0.77	0.75	0.73	0.71
	60Hz	1.45	1.23	1.11	1.06	1.00	0.93	0.85	0.83	0.81	0.79	0.77	0.75	0.73	0.71

CFOD - Correction Factor Outlet Dewpoint

Outlet Dewpoint	°C	+3	+5	+7
	°F	+37	+41	+45
Correction Factor	50Hz	1.00	0.78	0.70
	60Hz	1.00	0.79	0.72

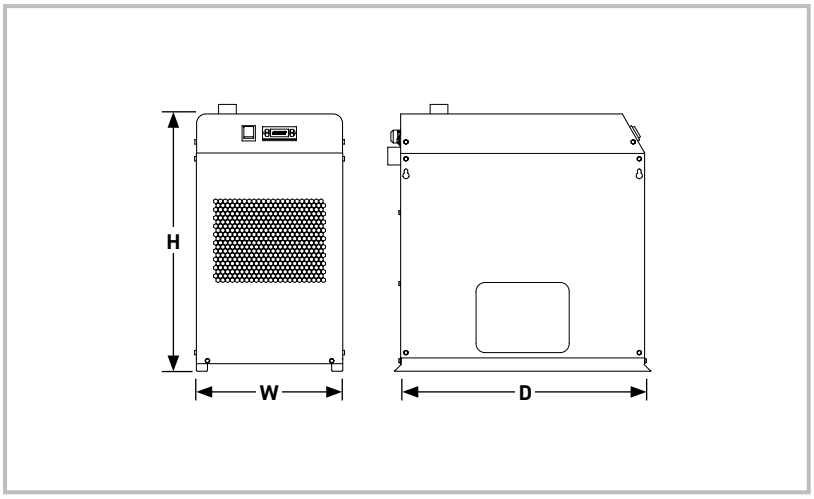

Weights & Dimensions

Model	Dimensions						Weight	
	Height (H)		Width (W)		Depth (D)			
	mm	ins	mm	ins	mm	ins	kg	lbs
SPS 004	520	20.5	300	11.8	400	15.7	24	53
SPS 007	520	20.5	300	11.8	400	15.7	24	53
SPS 009	520	20.5	300	11.8	400	15.7	25	55
SPS 014	580	22.8	330	13.0	550	21.7	35	77
SPS 018	580	25.6	330	13.0	550	21.7	36	79
SPS 026	650	25.6	400	15.7	630	24.8	46	101
SPS 032	650	25.6	400	15.7	630	24.8	46	101
SPS 040	650	25.6	400	15.7	630	24.8	47	104
SPS 052	650	25.6	400	15.7	630	24.8	53	117
SPS 062	650	25.6	400	15.7	630	24.8	55	121
SPS 080	840	33.1	450	17.7	780	30.7	80	176
SPS 100	840	33.1	450	17.7	780	30.7	80	176

Recommended Filtration

Dryer Inlet	Dryer Outlet
General Purpose Pre-Filter	High Efficiency Post Filter
AOPX010C	AAPX010C
AOPX015C	AAPX015C
AOPX015C	AAPX015C
AOPX020D	AAPX020D
AOPX020D	AAPX020D
AOPX025E	AAPX025E
AOPX025E	AAPX025E
AOPX025E	AAPX025E
AOPX030G	AAPX030G
AOPX030G	AAPX030G
AOPX035G	AAPX035G
AOPX035G	AAPX035G

Parker Catalogue Numbers

Model	With Timed Drain	With Electronic Drain	With Electronic Drain & Energy Saving	With External Float Drain
SPS 004	SPS004-A2301DF16TIS	SPS004-A2301DF16EXS	-	SPS004-A2301DF16FHS
SPS 007	SPS007-A2301DF16TIS	SPS007-A2301DF16EXS	-	SPS007-A2301DF16FHS
SPS 009	SPS009-A2301DF16TIS	SPS009-A2301DF16EXS	-	SPS009-A2301DF16FHS
SPS 014	SPS014-A2301DF16TIS	SPS014-A2301DF16EXS	-	SPS014-A2301DF16FHS
SPS 018	SPS018-A2301DF16TIS	SPS018-A2301DF16EXS	-	SPS018-A2301DF16FHS
SPS 026	SPS026-A2301DF16TIS	SPS026-A2301DF16EXS	SPS026-A2301DF16EXSES	SPS026-A2301DF16FHS
SPS 032	SPS032-A2301DF16TIS	SPS032-A2301DF16EXS	SPS032-A2301DF16EXSES	SPS032-A2301DF16FHS
SPS 040	SPS040-A2301DF16TIS	SPS040-A2301DF16EXS	SPS040-A2301DF16EXSES	SPS040-A2301DF16FHS
SPS 052	SPS052-A2301DF16TIS	SPS052-A2301DF16EXS	SPS052-A2301DF16EXSES	SPS052-A2301DF16FHS
SPS 062	SPS062-A2301DF16TIS	SPS062-A2301DF16EXS	SPS062-A2301DF16EXSES	SPS062-A2301DF16FHS
SPS 080	SPS080-A2301DF14TIS	SPS080-A2301DF14EXS	SPS080-A2301DF14EXSES	SPS080-A2301DF14FHS
SPS 100	SPS100-A2301DF14TIS	SPS100-A2301DF14EXS	SPS100-A2301DF14EXSES	SPS100-A2301DF14FHS

PSE Direct Expansion Refrigeration Dryers

Dryer Performance

Dryer Models	Dewpoint (Standard)		Dewpoint (Option 1)		Dewpoint (Option 2)	
	°C	°F	°C	°F	°C	°F
PSE	+3	+37	+7	+45	+10	+50

Technical Data

Dryer Models	Minimum Operating Pressure		Maximum Operating Pressure		Minimum Operating Temperature		Maximum Operating Temperature		Maximum Ambient Temperature		Electrical Supply (Standard)	Electrical Supply (Optional)	Thread Type	Noise Level
	bar g	psi g	bar g	psi g	°C	°F	°C	°F	°C	°F				dB(A)
PSE 120 - 1800	2	29	14	203	5	41	65	149	50	122	400V 3ph 50Hz / 460V 3ph 60Hz	N/A	BSPP & DIN Flange	<75

Flow Rates

Model	Pipe Size	Inlet Flow Rate at 50Hz				Absorbed Power at 50Hz kW	Inlet Flow Rate at 60Hz				Absorbed Power at 60Hz kW
		L/s	m³/min	m³/hr	cfm		L/s	m³/min	m³/hr	cfm	
PSE 120	2"	200	12	720	424	1.32	215	13	773	455	1.7
PSE 140	2"	233	14	840	494	1.32	252	15	907	534	1.7
PSE 180	2"	300	18	1080	636	1.51	323	19	1163	685	1.9
PSE 220	2½"	367	22	1320	777	1.79	399	24	1435	845	2.2
PSE 260	2½"	433	26	1560	918	2.05	474	28	1708	1005	2.5
PSE 300	2½"	500	30	1800	1059	2.62	539	32	1941	1142	3.3
PSE 350	2½"	583	35	2100	1236	3.22	624	37	2247	1323	4.0
PSE 460	DN100	767	46	2760	1625	3.22	835	50	3005	1769	3.9
PSE 520	DN100	867	52	3120	1836	4.55	941	56	3386	1993	5.6
PSE 630	DN100	1050	63	3780	2225	4.55	1172	70	4219	2483	5.6
PSE 750	DN150	1250	75	4500	2649	6.52	1381	83	4970	2925	8.0
PSE 900	DN150	1500	90	5400	3178	9.05	1655	99	5957	3506	11.0
PSE 1200	DN150	2000	120	7200	4238	9.05	2210	133	7956	4683	11.0
PSE 1500	DN200	2500	150	9000	5297	11.17	2760	166	9935	5848	13.6
PSE 1800	DN200	3000	180	10800	6357	13.12	3281	197	11812	6952	16.4

Stated flows are for operation at 7 bar (g) (102 psi g) with reference to 20°C, 1 bar (a), 0% relative water vapour pressure, 25°C cooling air temperature, 35°C air inlet temperature and +3°C pressure dewpoint. All models supplied with low GWP refrigerant R513A.

For flows at other conditions, apply the correction factors shown below.

Product Selection & Correction Factors

For correct operation, compressed air dryers must be sized using for the maximum (summer) inlet temperature, maximum (summer) ambient temperature, minimum inlet pressure, required outlet dewpoint and maximum flow rate of the installation.

To select a dryer, first calculate the MDC (Minimum Drying Capacity) using the formula below then select a dryer from the flow rate table above with a flow rate equal to or above the MDC.

Minimum Drying Capacity = System Flow x CFIT x CFAT x CFMIP x CFOD

CFIT - Correction Factor Maximum Inlet Temperature

Maximum Inlet Temperature	°C	30	35	40	45	50	55	60	65
	°F	86	95	104	113	122	131	140	149
Correction Factor - 50Hz & 60Hz		0.81	1.00	1.23	1.49	1.82	2.44	2.63	2.94

CFAT - Correction Factor Maximum Ambient Temperature

Maximum Ambient Temperature	°C	20	25	30	35	40	45	50
	°F	68	77	86	95	104	113	122
Correction Factor - 50Hz & 60Hz		0.97	1.00	1.04	1.08	1.14	1.22	1.39

CFMIP - Correction Factor Minimum Inlet Pressure

Minimum Inlet Pressure	bar g	3	4	5	6	7	8	9	10	11	12	13	14
	psi g	44	58	73	87	100	116	131	145	160	174	189	203
Correction Factor - 50Hz & 60Hz		1.45	1.25	1.14	1.04	1.00	0.96	0.93	0.91	0.88	0.87	0.85	0.85

CFOD - Correction Factor Outlet Dewpoint

Outlet Dewpoint	°C	+3	+5	+7	+10
	°F	+37	+41	+45	+50
Correction Factor - 50Hz & 60Hz		1.00	0.90	0.81	0.69

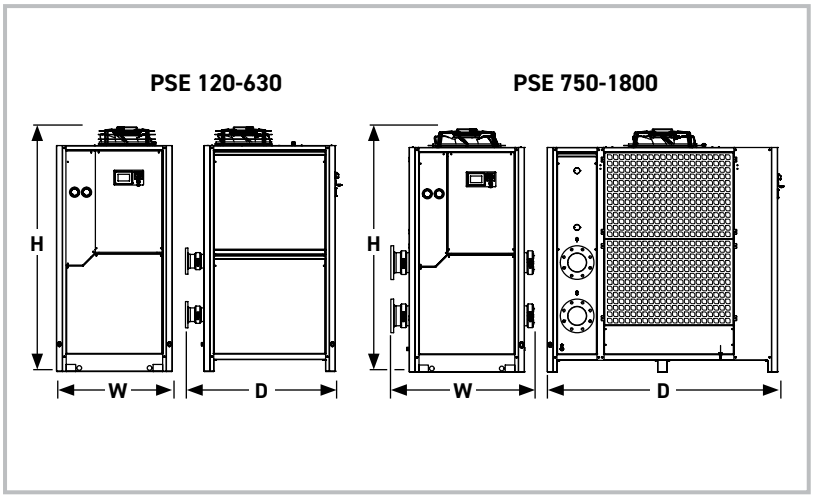

Weights & Dimensions

Model	Dimensions						Weight	
	Height (H)		Width (W)		Depth (D)			
	mm	ins	mm	ins	mm	ins	kg	lbs
PSE 120	1365	53.7	703	27.7	1150	45.3	205	452
PSE 140	1365	53.7	703	27.7	1150	45.3	205	452
PSE 180	1365	53.7	703	27.7	1150	45.3	210	463
PSE 220	1410	55.5	703	27.7	1151	45.3	260	573
PSE 260	1410	55.5	703	27.7	1151	45.3	262	578
PSE 300	1410	55.5	703	27.7	1151	45.3	264	582
PSE 350	1410	55.5	703	27.7	1151	45.3	270	595
PSE 460	2055	80.9	973	38.3	1287	50.7	380	838
PSE 520	2055	80.9	973	38.3	1287	50.7	380	838
PSE 630	2055	80.9	973	38.3	1287	50.7	420	926
PSE 750	2055	80.9	1205	47.4	1974	77.7	730	1609
PSE 900	2055	80.9	1205	47.4	1974	77.7	770	1698
PSE 1200	2055	80.9	1205	47.4	1974	77.7	850	1874
PSE 1500	2040	80.3	1517	59.7	2529	99.6	1070	2359
PSE 1800	2040	80.3	1517	59.7	2529	99.6	1210	2668

Recommended Filtration

Dryer Inlet	Dryer Outlet
General Purpose Pre-Filter	High Efficiency Post Filter
AOPX040H	AAPX040H
AOPX040H	AAPX040H
AOPX045I	AAPX045I
AOPX050I	AAPX050I
AOPX055I	AAPX055I
AOPX055I	AAPX055I
AOPX055I	AAPX055I
AO070O	AO070O
AO070O	AA070O
AO070O	AA070O
AO075P	AA075P
AO075P	AA075P
AO080P	AA080P
AO085Q	AA085Q
AO085Q	AA085Q

Parker Catalogue Numbers

Model	Air Cooled	Water Cooled
PSE 120	PSE120-A4X03DF14EI	-
PSE 140	PSE140-A4X03DF14EI	-
PSE 180	PSE180-A4X03DF14EI	-
PSE 220	PSE220-A4X03DF14EITS	PSE220-S4X03DF14EITS
PSE 260	PSE260-A4X03DF14EITS	PSE260-S4X03DF14EITS
PSE 300	PSE300-A4X03DF14EITS	PSE300-S4X03DF14EITS
PSE 350	PSE350-A4X03DF14EITS	PSE350-S4X03DF14EITS
PSE 460	PSE460-A4X03DF14EITS	PSE460-S4X03DF14EITS
PSE 520	PSE520-A4X03DF14EITS	PSE520-S4X03DF14EITS
PSE 630	PSE630-A4X03DF14EITS	PSE630-S4X03DF14EITS
PSE 750	PSE750-A4X03DF14EITS	PSE750-S4X03DF14EITS
PSE 900	PSE900-A4X03DF14EITS	PSE900-S4X03DF14EITS
PSE 1200	PSE1200-A4X03DF14EITS	PSE1200-S4X03DF14EITS
PSE 1500	PSE1500-A4X03DF14EITS	PSE1500-S4X03DF14EITS
PSE 1800	PSE1800-A4X03DF14EITS	PSE1800-S4X03DF14EITS

G50 - 45 Bar Compressed Air Filters

Filtration Performance

Filtration Grade	Filter Type	Particle Reduction (inc. water & oil aerosols)	Maximum Remaining Oil Content at 21°C (70°F)	Filtration Efficiency	Change Element Every	Precede with Filtration Grade
ZP	Coalescing & Dry Particulate	Down to 1 micron	0.5 mg/m³ 0.5 ppm(w)	99.925%	12 months or 6000 hours	N/A
XP	Coalescing & Dry Particulate	Down to 0.01 micron	0.01 mg/m³ 0.01 ppm(w)	99.9999%	12 months or 6000 hours	ZP
A	Oil Vapour Reduction	N/A	0.003 mg/m³ 0.003 ppm(w)	N/A	When oil vapour is detected	ZP+XP

Important Note:
Using the same filter housings as their coalescing and dry particulate counterparts, Grade A filter elements differ in that they utilise a bed of activated carbon to adsorb oil vapour. It is important to note, in-line adsorption filter elements have a different life span compared to coalescing and dry particulate filters and require more frequent element changes.

Technical Data

Filtration Grade	Filter Models	Minimum Operating Pressure		Maximum Operating Pressure		Minimum Operating Temperature		Maximum Operating Temperature	
		bar g	psi g	bar g	psi g	°C	°F	°C	°F
ZP/XP	G2/50 - G14/50	20	290	45	653	2	35	80	176
A	G2/50 - G14/50	20	290	45	653	2	35	50	122

Flow Rates

Model		Pipe Size BSPP	l/s	m³/min	m³/hr	cfm	Replacement Element		No.
G2/50	Grade	¼"	20.8	1.3	75	44	1030	Grade	1
G3/50	Grade	¼"	34.7	2.1	125	74	1050	Grade	1
G5/50	Grade	⅜"	48.6	2.9	175	103	1070	Grade	1
G7/50	Grade	½"	69.4	4.2	250	147	1140	Grade	1
G9/50	Grade	¾"	125.0	7.5	450	265	2010	Grade	1
G11/50	Grade	1"	208.3	12.5	750	441	2020	Grade	1
G12/50	Grade	1½"	326.4	19.6	1175	692	2030	Grade	1
G13/50	Grade	1½"	486.1	29.2	1750	1030	2050	Grade	1
G14/50	Grade	2"	722.2	43.3	2600	1530	3050	Grade	1

Stated flows are for operation at 45 bar (g) (653 psi g) with reference to 20°C, 1 bar (a), 0% relative water vapour pressure. For flows at other pressures, apply the correction factors shown below.

Filter Coding Example

Grade	Model
XP	G2/50XP

Product Selection & Correction Factors

To correctly select a filter model, the flow rate of the filter must be adjusted for the minimum operating (inlet) pressure at the point of installation.

1. Obtain the minimum operating (inlet) pressure and maximum compressed air flow rate at the inlet of the filter.
2. Select the correction factor for minimum inlet pressure from the CFMIP table (always round down e.g. for 38 bar, use 35 bar correction factor)
3. Calculate the minimum filtration capacity. Minimum Filtration Capacity = Compressed Air Flow Rate x CFMIP
4. Using the minimum filtration capacity, select a filter model from the flow rate tables above (filter selected must have a flow rate equal to or greater than the minimum filtration capacity).

CFMIP - Correction Factor Minimum Inlet Pressure

Minimum Inlet Pressure	bar g	20	25	30	35	40	45
	psi g	290	362	435	508	580	652
Correction Factor		2.43	1.96	1.65	1.41	1.24	1.10

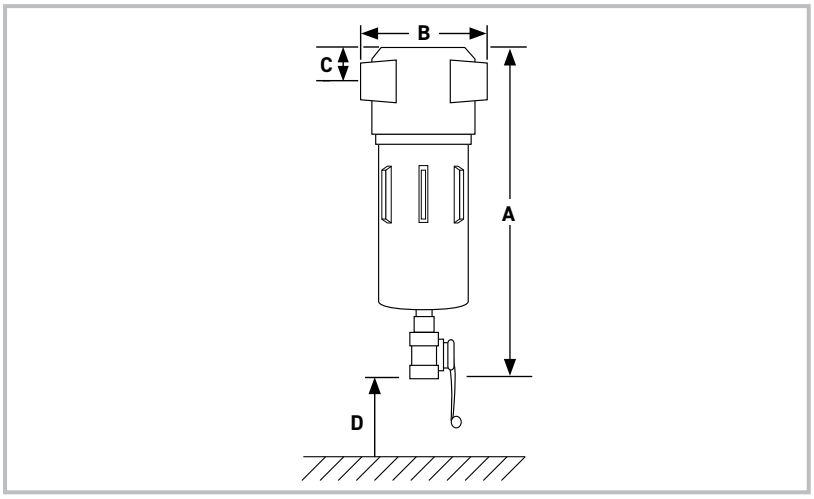

Weight & Dimensions

Model	A		B		C		D		Weight	
	mm	ins	mm	ins	mm	ins	mm	ins	kg	lbs
G2/50	200	7.9	61	2.4	14	0.6	60	2.4	0.8	1.7
G3/50	245	9.6	87	3.4	21	0.8	75	3.0	1.2	2.7
G5/50	245	9.6	87	3.4	21	0.8	90	3.5	1.2	2.7
G7/50	315	12.4	87	3.4	21	0.8	160	6.3	1.4	3.1
G9/50	350	13.8	130	5.1	43	1.7	135	5.3	4.1	9.1
G11/50	450	17.7	130	5.1	43	1.7	235	9.3	4.9	10.9
G12/50	525	20.7	130	5.1	43	1.7	335	13.2	5.0	11.1
G13/50	755	29.7	130	5.1	43	1.7	525	20.7	6.6	14.6
G14/50	735	28.9	164	6.5	48	1.9	520	20.5	8.9	19.7

Parker Catalogue Numbers

Model	General Purpose Coalescing & Dry Particulate Filters	High Efficiency Coalescing & Dry Particulate Filters	Oil Vapour Reduction Filters
G2/50	G2/50ZP	G2/50XP	G2/50A
G3/50	G3/50ZP	G3/50XP	G3/50A
G5/50	G5/50ZP	G5/50XP	G5/50A
G7/50	G7/50ZP	G7/50XP	G7/50A
G9/50	G9/50ZP	G9/50XP	G9/50A
G11/50	G11/50ZP	G11/50XP	G11/50A
G12/50	G12/50ZP	G12/50XP	G12/50A
G13/50	G13/50ZP	G13/50XP	G13/50A
G14/50	G2/50ZP	G2/50XP	G2/50A

GH-350 Bar Compressed Air Filters

Filtration Performance

Filtration Grade	Filter Type	Particle Reduction (including water & oil aerosols)	Maximum Remaining Oil Content at 21°C (70°F)	Filtration Efficiency	Initial Dry Differential Pressure	Initial Saturated Differential Pressure	Change Element Every	Precede with Filtration Grade
V	Dry Particulate	Down to 3 micron	N/A	>90%	<300 mbar (<4.35 psi)	<350 mbar (<5 psi)	12 months or 6000 hours	N/A
ZP	Coalescing & Dry Particulate	Down to 1 micron	0.5 mg/m³ 0.5 ppm(w)	99.925%	<300 mbar (<4.35 psi)	<370 mbar (<5.4 psi)	12 months or 6000 hours	N/A
XP	Coalescing & Dry Particulate	Down to 0.01 micron	0.01 mg/m³ 0.01 ppm(w)	99.9999%	<300 mbar (<4.35 psi)	<400 mbar (<5.8 psi)	12 months or 6000 hours	ZP
A	Oil Vapour Reduction	N/A	0.003 mg/m³ 0.003 ppm(w)	N/A	<300 mbar (<4.35 psi)	N/A	When oil vapour is detected	ZP+XP

Important Note:

Using the same filter housings as their coalescing and dry particulate counterparts, Grade A filter elements differ in that they utilise a bed of activated carbon to adsorb oil vapour. It is important to note, in-line adsorption filter elements have a different life span compared to coalescing and dry particulate filters and require more frequent element changes.

Technical Data

Filtration Grade	Filter Models	Minimum Operating Pressure		Maximum Operating Pressure		Minimum Operating Temperature		Maximum Operating Temperature	
		bar g	psi g	bar g	psi g	°C	°F	°C	°F
V/ZP/XP	GH3/350 - GH13/350	50	725	350	5076	2	35	80	176
A	GH3/350 - GH13/350	50	725	350	5076	2	35	50	122

Flow Rates

Model	Pipe Size BSPP	L/S	m³/min	m³/hr	cfm	Replacement Element	No.
GH3/350 Grade	½"	101	6.1	365	215	1050 Grade	1
GH5/350 Grade	½"	139	8.4	501	295	1070 Grade	1
GH7/350 Grade	½"	215	12.9	776	457	1140 Grade	1
GH9/350 Grade	½"	287	17.3	1035	609	2010 Grade	1
GH11/350 Grade	1"	514	30.9	1852	1090	2020 Grade	1
GH12/350 Grade	1½"	782	46.9	2816	1657	2030 Grade	1
GH13/350 Grade	1½"	1184	71.0	4261	2508	2050 Grade	1

Stated flows are for operation at 7 bar (g) (102 psi g) with reference to 20°C, 1 bar (a), 0% relative water vapour pressure. For flows at other pressures, apply the correction factors shown below.

Filter Coding Example

Grade	Model
XP	GH3/350XP

Product Selection & Correction Factors

To correctly select a filter model, the flow rate of the filter must be adjusted for the minimum operating (inlet) pressure at the point of installation.

1. Obtain the minimum operating (inlet) pressure and maximum compressed air flow rate at the inlet of the filter.
2. Select the correction factor for minimum inlet pressure from the CFMIP table (always round down e.g. for 155 bar, use 150 bar correction factor)
3. Calculate the minimum filtration capacity. Minimum Filtration Capacity = Compressed Air Flow Rate x CFMIP
4. Using the minimum filtration capacity, select a filter model from the flow rate tables above (filter selected must have a flow rate equal to or greater than the minimum filtration capacity).

CFMIP - Correction Factor Minimum Inlet Pressure

Minimum Inlet Pressure	bar g	50	60	70	80	90	100	125	150	175	200	225	250	275	300	325	350
	psi g	725	870	1015	1160	1305	1450	1813	2175	2538	2901	3263	3626	3989	4351	4714	5076
Correction Factor		2.65	2.42	2.24	2.09	1.97	1.87	1.67	1.53	1.41	1.32	1.25	1.18	1.13	1.08	1.04	1.00

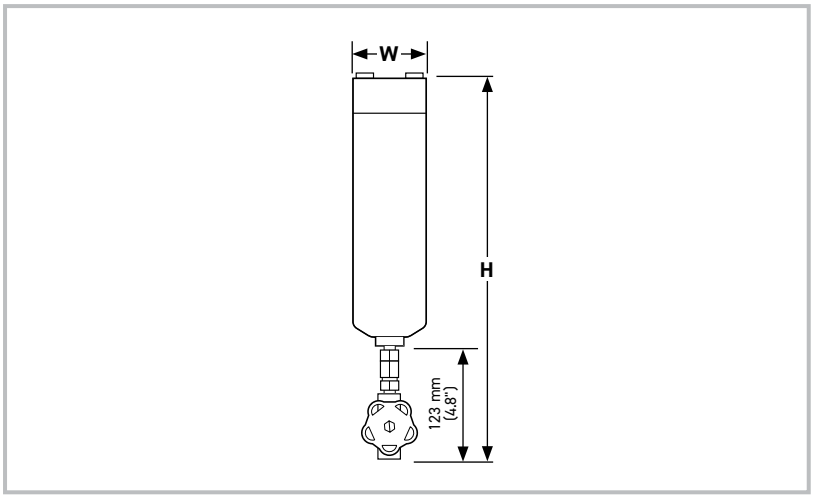

Weights & Dimensions

Model	Height (H)		Width (W)		Depth (D)		Weight	
	mm	ins	mm	ins	mm	ins	kg	lbs
GH3/350	355	14.0	80	3.1	80	3.1	2.8	6.2
GH5/350	355	14.0	80	3.1	80	3.1	2.8	6.2
GH7/350	420	16.5	80	3.1	80	3.1	3.4	7.5
GH9/350	455	17.9	116	4.6	116	4.6	18.2	40.1
GH11/350	540	21.3	116	4.6	116	4.6	21.9	48.3
GH12/350	655	25.8	125	4.9	125	4.9	28.3	62.4
GH13/350	910	35.8	125	4.9	125	4.9	39.2	86.4

Parker Catalogue Numbers

Model	3 Micron Pre-Filters	General Purpose Coalescing & Dry Particulate Filters	High Efficiency Coalescing & Dry Particulate Filters	Oil Vapour Reduction Filters
GH3/350	GH3/350V	GH3/350ZP	GH3/350XP	GH3/350A
GH5/350	GH5/350V	GH5/350ZP	GH5/350XP	GH5/350A
GH7/350	GH7/350V	GH7/350ZP	GH7/350XP	GH7/350A
GH9/350	GH9/350V	GH9/350ZP	GH9/350XP	GH9/350A
GH11/350	GH11/350V	GH11/350ZP	GH11/350XP	GH11/350A
GH12/350	GH12/350V	GH12/350ZP	GH12/350XP	GH12/350A
GH13/350	GH13/350V	GH13/350ZP	GH13/350XP	GH13/350A

HDK-25 Bar Compressed Air Dryers

Dryer Performance

Dryer Models	Dewpoint (Standard)		ISO 8573-1:2010 Classification (Standard)	Dewpoint (Option 1)		ISO 8573-1:2010 Classification (Option 1)
	˚C	˚F		˚C	˚F	
HDK 18/25 - 550/25	-40	-40	Class 2.2.2	-20	-4	Class 2.3.2

Technical Data

Dryer Models	Minimum Operating Pressure		Maximum Operating Pressure		Minimum Operating Temperature		Maximum Operating Temperature		Maximum Ambient Temperature		Electrical Supply (Standard)	Electrical Supply (Optional)	Thread Type	Noise Level
	bar g	psi g	bar g	psi g	˚C	˚F	˚C	˚F	˚C	˚F				dB(A)
HDK 18/25 - HDK 550/25	8	116	25	363	30	86	55	131	50	122	230V 1ph 50/60Hz	115V 1ph 50/60Hz	BSPP	95-115

Flow Rates

Model	Pipe Size	Inlet Flow Rate			
		L/s	m³/min	m³/hr	cfm
HDK 18/25	½"	7	0.42	25	15
HDK 40/25	½"	14	0.84	50	29
HDK 80/25	½"	28	1.67	100	59
HDK 120/25	½"	35	2.09	125	74
HDK 160/25	¾"	50	3.01	180	106
HDK 210/25	¾"	67	4.01	240	141
HDK 360/25	1"	108	6.51	390	230
HDK 550/25	1"	167	10.02	600	353

Stated flows are for operation at 25 bar (g) (363 psi g) with reference to 20°C, 1 bar (a), 0% relative water vapour pressure. For flows at other pressures, apply the correction factors shown below.

Product Selection & Correction Factors

For correct operation, compressed air dryers must be sized using for the maximum inlet temperature, maximum ambient temperature, minimum inlet pressure, required outlet dewpoint and maximum flow rate of the installation.

To select a dryer, first calculate the MDC (Minimum Drying Capacity) using the formula below then select a dryer from the flow rate table above with a flow rate equal to or above the MDC.

Minimum Drying Capacity = System Flow x CFMIT x CFMAT x CFMIP x CFOD

CFMIT - Correction Factor Maximum Inlet Temperature

Maximum Inlet Temperature	˚C	30	35	40	45	50
	˚F	86	95	104	113	122
Correction Factor		0.98	1.00	1.28	1.70	2.04

CFMAT - Correction Factor Maximum Ambient Temperature

Maximum Ambient Temperature	˚C	25	30	35	40	45	50
	˚F	77	86	95	104	113	122
Correction Factor		1.00	1.00	1.00	1.00	1.00	1.00

CFMIP - Correction Factor Minimum Inlet Pressure

Minimum Inlet Pressure	bar g	10	15	20	25
	psi g	145	218	290	363
Correction Factor		2.50	1.67	1.25	1.00

CFOD - Correction Factor Outlet Dewpoint

Outlet Dewpoint	˚C	-20	-40
	˚F	-4	-40
Correction Factor		1.00	1.00

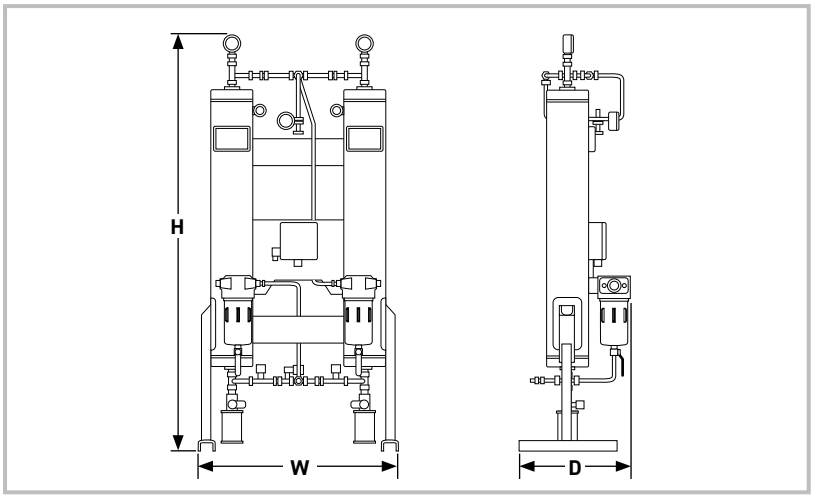

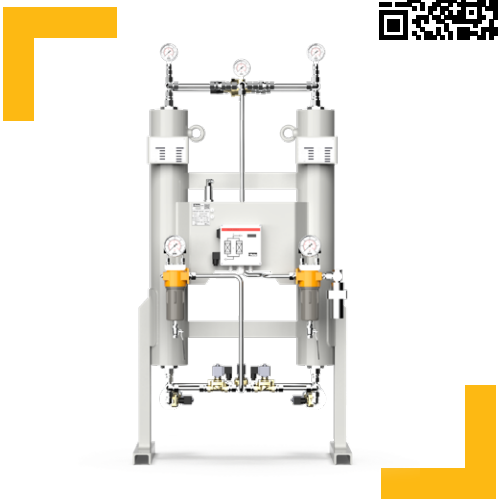

Weights & Dimensions

Model	Dimensions						Weight	
	Height (H)		Width (W)		Depth (D)			
	mm	ins	mm	ins	mm	ins	kg	lbs
HDK 18/25	1150	45.3	672	26.5	402	15.8	65	143
HDK 40/25	1422	56.0	685	27.0	414	16.3	78	172
HDK 80/25	1522	59.9	790	31.1	414	16.3	104	229
HDK 120/25	1720	67.7	786	30.9	412	16.2	113	249
HDK 160/25	1716	67.6	815	32.1	462	18.2	153	337
HDK 210/25	1716	67.6	840	33.1	479	18.9	182	400
HDK 360/25	1808	71.2	890	35.0	509	20.0	240	528
HDK 550/25	1854	73.0	945	37.2	540	21.3	390	858

Filtration (Required/Included/Optional)

Model	Pipe Size BSPP	Dryer Inlet			Dryer Outlet		
		Required	Required	Included	Option	Included	Option
		Liquid Separator	General Purpose Pre-filter	High Efficiency Filter	Oil Vapour Reduction Filter	General Purpose Dry Particulate Filter	High Efficiency Dry Particulate Filter
HDK 18/25	½"	-	G3/50ZP	G3/50XP	G3/50A	G3/50V	G3/50XP
HDK 40/25	½"	-	G3/50ZP	G3/50XP	G3/50A	G3/50V	G3/50XP
HDK 80/25	½"	-	G5/50ZP	G5/50XP	G5/50A	G5/50V	G5/50XP
HDK 120/25	½"	-	G7/50ZP	G7/50XP	G7/50A	G7/50V	G7/50XP
HDK 160/25	¾"	-	G9/50ZP	G9/50XP	G9/50A	G9/50V	G9/50XP
HDK 210/25	¾"	-	G9/50ZP	G9/50XP	G9/50A	G9/50V	G9/50XP
HDK 360/25	1"	-	G11/50ZP	G11/50XP	G11/50A	G11/50V	G11/50XP
HDK 550/25	1"	-	G12/50ZP	G12/50XP	G12/50A	G12/50V	G12/50XP

Parker Catalogue Numbers 230V/1ph/50Hz-60Hz

Model	Catalogue Number
HDK 18/25	H18/25D0-G230MT
HDK 40/25	H40/25D0-G230MT
HDK 80/25	H80/25D0-G230MT
HDK 120/25	H120/25D0-G230MT
HDK 160/25	H160/25D0-G230MT
HDK 210/25	H210/25D0-G230MT
HDK 360/25	H360/25D0-G230MT
HDK 550/25	H550/25D0-G230MT

HDK-45 Bar Compressed Air Dryers

Dryer Performance

Dryer Models	Dewpoint (Standard)		ISO 8573-1:2010 Classification (Standard)	Dewpoint (Option 1)		ISO 8573-1:2010 Classification (Option 1)
	°C	°F		°C	°F	
HDK 18/50 - HDK 550/50	-40	-40	Class 2.2.2	-20	-4	Class 2.3.2

Technical Data

Dryer Models	Minimum Operating Pressure		Maximum Operating Pressure		Minimum Operating Temperature		Maximum Operating Temperature		Maximum Ambient Temperature		Electrical Supply (Standard)	Electrical Supply (Optional)	Thread Type	Noise Level
	bar g	psi g	bar g	psi g	°C	°F	°C	°F	°C	°F				dB(A)
HDK 18/50 - HDK 550/50	8	116	45	653	30	86	55	131	50	122	230V 1ph 50/60Hz	115V 1ph 50/60Hz	BSPP	95-115

Flow Rates

Model	Pipe Size	Inlet Flow Rate			
		L/s	m³/min	m³/hr	cfm
HDK 18/50	½"	13	0.76	45	26
HDK 40/50	½"	25	1.50	90	53
HDK 80/50	½"	50	3.01	180	106
HDK 120/50	½"	60	3.60	216	127
HDK 160/50	¾"	90	5.41	324	191
HDK 210/50	¾"	120	7.21	432	255
HDK 360/50	1"	195	11.71	703	414
HDK 550/50	1"	295	17.75	1063	626

Stated flows are for operation at 45 bar (g) (653 psi g) with reference to 20°C, 1 bar (a), 0% relative water vapour pressure. For flows at other pressures, apply the correction factors shown below.

Product Selection & Correction Factors

For correct operation, compressed air dryers must be sized using for the maximum inlet temperature, maximum ambient temperature, minimum inlet pressure, required outlet dewpoint and maximum flow rate of the installation.

To select a dryer, first calculate the MDC (Minimum Drying Capacity) using the formula below then select a dryer from the flow rate table above with a flow rate equal to or above the MDC.

Minimum Drying Capacity = System Flow x CFMIT x CFMAT x CFMIP x CFOD

CFMIT - Correction Factor Maximum Inlet Temperature

Maximum Inlet Temperature	°C	30	35	40	45	50
	°F	86	95	104	113	122
Correction Factor		0.98	1.00	1.28	1.70	2.04

CFMAT - Correction Factor Maximum Ambient Temperature

Maximum Ambient Temperature	°C	25	30	35	40	45	50
	°F	77	86	95	104	113	122
Correction Factor		1.00	1.00	1.00	1.00	1.00	1.00

CFMIP - Correction Factor Minimum Inlet Pressure

Minimum Inlet Pressure	bar g	20	25	30	35	40	45
	psi g	290	363	435	508	580	653
Correction Factor		2.36	1.92	1.62	1.40	1.24	1.00

CFOD - Correction Factor Outlet Dewpoint

Outlet Dewpoint	°C	-20	-40
	°F	-4	-40
Correction Factor		1.00	1.00

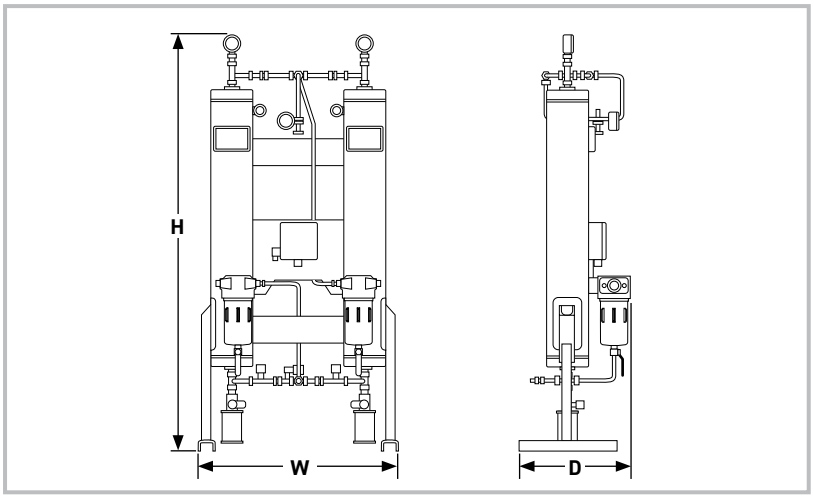

Weights & Dimensions

Model	Dimensions						Weight	
	Height (H)		Width (W)		Depth (D)			
	mm	ins	mm	ins	mm	ins	kg	lbs
HDK 18/50	1150	45.3	672	26.5	402	15.8	65	143
HDK 40/50	1422	56.0	685	27.0	414	16.3	78	172
HDK 80/50	1522	59.9	790	31.1	414	16.3	104	229
HDK 120/50	1720	67.7	786	30.9	412	16.2	113	249
HDK 160/50	1716	67.6	815	32.1	462	18.2	153	337
HDK 210/50	1716	67.6	840	33.1	479	18.9	182	400
HDK 360/50	1808	71.2	890	35.0	509	20.0	240	528
HDK 550/50	1854	73.0	945	37.2	540	21.3	390	858

Filtration (Required/Included/Optional)

Model	Pipe Size BSPP	Dryer Inlet			Dryer Outlet		
		Required	Required	Included	Option	Included	Option
		Liquid Separator	General Purpose Pre-filter	High Efficiency Filter	Oil Vapour Reduction Filter	General Purpose Dry Particulate Filter	High Efficiency Dry Particulate Filter
HDK 18/50	½"	-	G3/50ZP	G3/50XP	G3/50A	G3/50V	G3/50XP
HDK 40/50	½"	-	G3/50ZP	G3/50XP	G3/50A	G3/50V	G3/50XP
HDK 80/50	½"	-	G5/50ZP	G5/50XP	G5/50A	G5/50V	G5/50XP
HDK 120/50	½"	-	G7/50ZP	G7/50XP	G7/50A	G7/50V	G7/50XP
HDK 160/50	¾"	-	G9/50ZP	G9/50XP	G9/50A	G9/50V	G9/50XP
HDK 210/50	¾"	-	G9/50ZP	G9/50XP	G9/50A	G9/50V	G9/50XP
HDK 360/50	1"	-	G11/50ZP	G11/50XP	G11/50A	G11/50V	G11/50XP
HDK 550/50	1"	-	G12/50ZP	G12/50XP	G12/50A	G12/50V	G12/50XP

Parker Catalogue Numbers 230V/1ph/50Hz-60Hz

Model	Catalogue Number With Dewpoint Sensor
HDK 18/50	H18/50D0-G230MT
HDK 40/50	H40/50D0-G230MT
HDK 80/50	H80/50D0-G230MT
HDK 120/50	H120/50D0-G230MT
HDK 160/50	H160/50D0-G230MT
HDK 210/50	H210/50D0-G230MT
HDK 360/50	H360/50D0-G230MT
HDK 550/50	H550/50D0-G230MT

HDK-MT-100 Bar Compressed Air Dryers

Dryer Performance

Dryer Models	Dewpoint (Standard)		ISO8573-1:2010 Classification (Standard)	Dewpoint (Option 1)		ISO8573-1:2010 Classification (Option 1)
	°C	°F		°C	°F	
HDK-MT 15 - 30/100	-40	-40	Class 2.2.2	-20	-4	Class 2.3.2

Technical Data

Dryer Models	Minimum Operating Pressure		Maximum Operating Pressure		Minimum Operating Temperature		Maximum Operating Temperature		Maximum Ambient Temperature		Electrical Supply (Standard)	Electrical Supply (Optional)	Thread Type	Noise Level
	bar g	psi g	bar g	psi g	°C	°F	°C	°F	°C	°F				dB(A)
HDK-MT 15 - 30/100	50	725	100	1450	30	86	55	131	50	122	230V 1ph 50/60Hz	115V 1ph 50/60Hz	BSPP	95-115

Flow Rates

Model	Pipe Size	Inlet Flow Rate			
		L/s	m^3/min	m^3/hr	cfm
HDK-MT 15/100	½"	33	2.00	120	71
HDK-MT 20/100	½"	50	3.01	180	106
HDK-MT 25/100	½"	67	4.01	240	141
HDK-MT 30/100	½"	83	5.01	300	177

Stated flows are for operation at 100 bar (g) (1450 psi g) with reference to 20°C, 1 bar (a), 0% relative water vapour pressure. For flows at other pressures, apply the correction factors shown below.

Product Selection & Correction Factors

For correct operation, compressed air dryers must be sized using for the maximum inlet temperature, maximum ambient temperature, minimum inlet pressure, required outlet dewpoint and maximum flow rate of the installation.

To select a dryer, first calculate the MDC (Minimum Drying Capacity) using the formula below then select a dryer from the flow rate table above with a flow rate equal to or above the MDC.

Minimum Drying Capacity = System Flow x CFMIT x CFMAT x CFMIP x CFOD

CFMIT - Correction Factor Maximum Inlet Temperature

Maximum Inlet Temperature	°C	30	35	40	45	50	55
	°F	86	95	104	113	122	131
Correction Factor		1.00	1.00	1.32	1.68	2.15	2.8

CFMAT - Correction Factor Maximum Ambient Temperature

Maximum Ambient Temperature	°C	25	30	35	40	45	50
	°F	77	86	95	104	113	122
Correction Factor		1.00	1.00	1.00	1.00	1.00	1.00

CFMIP - Correction Factor Minimum Inlet Pressure

Minimum Inlet Pressure	bar g	50	60	70	80	90	100
	psi g	725	870	1015	1160	1305	1450
Correction Factor		1.00	1.00	1.00	1.00	1.00	1.00

CFOD - Correction Factor Outlet Dewpoint

Outlet Dewpoint	°C	-20	-40
	°F	-4	-40
Correction Factor		1.00	1.00

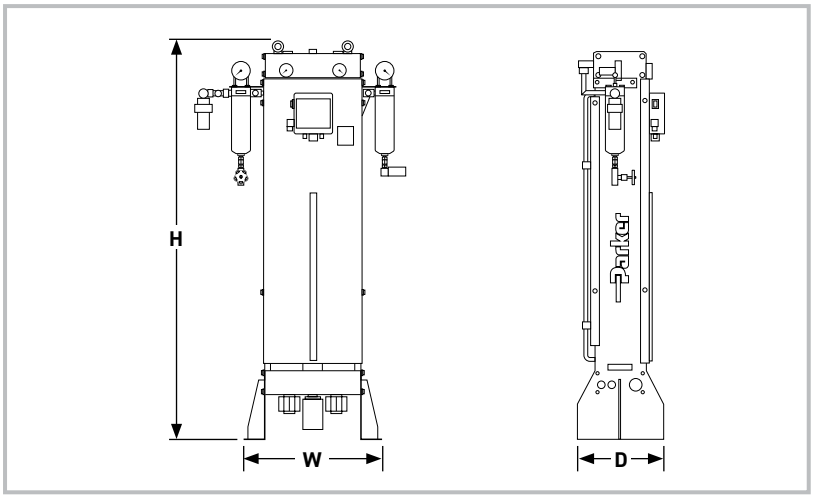

Weights & Dimensions

Model	Dimensions						Weight	
	Height (H)		Width (W)		Depth (D)			
	mm	ins	mm	ins	mm	ins	kg	lbs
HDK-MT 15/100	1050	41.3	700	27.6	370	14.6	160	353
HDK-MT 20/100	1250	49.2	700	27.6	370	14.6	180	397
HDK-MT 25/100	1450	57.1	700	27.6	370	14.6	200	441
HDK-MT 30/100	1650	65.0	700	27.6	370	14.6	220	485

Filtration (Required/Included/Optional)

Model	Pipe Size BSPP	Dryer Inlet			Dryer Outlet		
		Required	Required	Included	Option	Included	Option
		Liquid Separator	General Purpose Pre-filter	High Efficiency Filter	Oil Vapour Reduction Filter	General Purpose Dry Particulate Filter	High Efficiency Dry Particulate Filter
HDK-MT 15/100	½"	-	GH7/100ZP	GH7/100XP	GH7/100A	GH7/100ZP/VV	GH7/100XP/VV
HDK-MT 20/100	½"	-	GH7/100ZP	GH7/100XP	GH7/100A	GH7/100ZP/VV	GH7/100XP/VV
HDK-MT 25/100	½"	-	GH7/100ZP	GH7/100XP	GH7/100A	GH7/100ZP/VV	GH7/100XP/VV
HDK-MT 30/100	½"	-	GH7/100ZP	GH7/100XP	GH7/100A	GH7/100ZP/VV	GH7/100XP/VV

Parker Catalogue Numbers 230V/1ph/50Hz-60Hz

Model	Catalogue Number With Dewpoint Sensor
HDK-MT 15/100	H15/100D2-G230MT
HDK-MT 20/100	H20/100D2-G230MT
HDK-MT 25/100	H25/100D2-G230MT
HDK-MT 30/100	H30/100D2-G230MT

HDK-MT-350 Bar Compressed Air Dryers

Dryer Performance

Dryer Models	Dewpoint (Standard)		ISO8573-1:2010 Classification (Standard)	Dewpoint (Option 1)		ISO8573-1:2010 Classification (Option 1)
	°C	°F		°C	°F	
HDK-MT 15-30/350	-40	-40	Class 2.2.2	-20	-4	Class 2.3.2

Technical Data

Dryer Models	Minimum Operating Pressure		Maximum Operating Pressure		Minimum Operating Temperature		Maximum Operating Temperature		Maximum Ambient Temperature		Electrical Supply (Standard)	Electrical Supply (Optional)	Thread Type	Noise Level
	bar g	psi g	bar g	psi g	°C	°F	°C	°F	°C	°F				dB(A)
HDK-MT 15-30/350	100	1450	350	5076	5	41	55	131	50	122	230V 1ph 50/60Hz	115V 1ph 50/60Hz	BSPP	95-115

Flow Rates

Model	Pipe Size	Inlet Flow Rate			
		L/s	m³/min	m³/hr	cfm
HDK-MT 15/350	½"	56	3.3	200	118
HDK-MT 20/350	½"	83	5.0	300	177
HDK-MT 25/350	½"	111	6.7	400	235
HDK-MT 30/350	½"	139	8.4	500	294

Stated flows are for operation at 350 bar (g) (5076 psi g) with reference to 20°C, 1 bar (a), 0% relative water vapour pressure. For flows at other pressures, apply the correction factors shown below.

Product Selection & Correction Factors

For correct operation, compressed air dryers must be sized using for the maximum (summer) inlet temperature, maximum (summer) ambient temperature, minimum inlet pressure, required outlet dewpoint and maximum flow rate of the installation.

To select a dryer, first calculate the MDC (Minimum Drying Capacity) using the formula below then select a dryer from the flow rate table above with a flow rate equal to or above the MDC.

Minimum Drying Capacity = System Flow x CFIT x CFAT x CFMIP x CFOD

CFMIT - Correction Factor Maximum Inlet Temperature

Maximum Inlet Temperature	°C	30	35	40	45	50	55
	°F	86	95	104	113	122	131
Correction Factor		1.00	1.00	1.32	1.68	2.15	2.8

CFMAT - Correction Factor Maximum Ambient Temperature

Maximum Ambient Temperature	°C	25	30	35	40	45	50
	°F	77	86	95	104	113	122
Correction Factor		1.00	1.00	1.00	1.00	1.00	1.00

CFMIP - Correction Factor Minimum Inlet Pressure

Minimum Inlet Pressure	bar g	100	150	200	250	300	350
	psi g	1450	2175	2900	3625	4351	5076
Correction Factor		3.57	2.33	1.75	1.41	1.16	1.00

CFOD - Correction Factor Outlet Dewpoint

Outlet Dewpoint	°C	-20	-40
	°F	-4	-40
Correction Factor		1.00	1.00

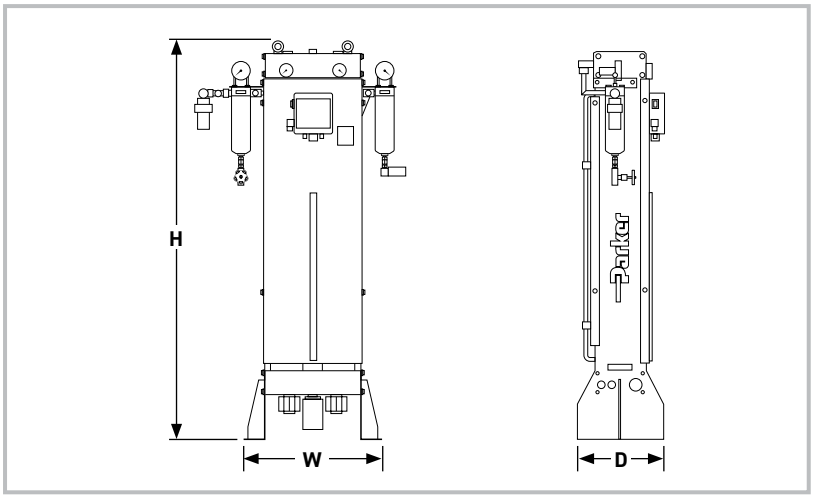

Weights & Dimensions

Model	Dimensions						Weight	
	Height (H)		Width (W)		Depth (D)			
	mm	ins	mm	ins	mm	ins	kg	lbs
HDK-MT 15/350	1050	41.3	700	27.6	370	14.6	190	86
HDK-MT 20/350	1250	49.2	700	27.6	370	14.6	220	100
HDK-MT 25/350	1450	57.1	700	27.6	370	14.6	250	114
HDK-MT 30/350	1650	65.0	700	27.6	370	14.6	280	127

Filtration (Required/Included/Optional)

Model	Pipe Size BSPP	Dryer Inlet			Dryer Outlet		
		Required	Required	Included	Option	Included	Option
		Liquid Separator	General Purpose Pre-filter	High Efficiency Filter	Oil Vapour Reduction Filter	General Purpose Dry Particulate Filter	High Efficiency Dry Particulate Filter
HDK-MT 15/350	½"	-	GH7/350ZP	GH7/350XP	GH7/350A	GH7/350ZP/VV	GH7/350XP/VV
HDK-MT 20/350	½"	-	GH7/350ZP	GH7/350XP	GH7/350A	GH7/350ZP/VV	GH7/350XP/VV
HDK-MT 25/350	½"	-	GH7/350ZP	GH7/350XP	GH7/350A	GH7/350ZP/VV	GH7/350XP/VV
HDK-MT 30/350	½"	-	GH7/350ZP	GH7/350XP	GH7/350A	GH7/350ZP/VV	GH7/350XP/VV

Parker Catalogue Numbers

Model	Catalogue Number With Dewpoint Sensor 230V 1ph 50/60Hz	Catalogue Number With Dewpoint Sensor 115V 1ph 50/60Hz
HDK-MT 15/350	H15/350D2-G230MT	H15/350D2-G115MT
HDK-MT 20/350	H20/350D2-G230MT	H20/350D2-G115MT
HDK-MT 25/350	H25/350D2-G 230MT	H25/350D2-G115MT
HDK-MT 30/350	H30/350D2-G230MT	H30/350D2-G115MT

BSP-MT Breathable Compressed Air Purifiers

Performance

Model	Dewpoint (Standard)		ISO8573-1:2010 Classification (Standard)
	°C	°F	
BSP-MT	-40	-40	Class 2.2.1

Technical Data

Dryer Models	Minimum Operating Pressure		Maximum Operating Pressure		Minimum Operating Temperature		Maximum Operating Temperature		Maximum Ambient Temperature		Electrical Supply (Standard)	Electrical Supply (Option)	Electrical Supply (Option)	Thread Type	Noise Level
	bar g	psi g	bar g	psi g	°C	°F	°C	°F	°C	°F					dB(A)
BSP-MT 1 - 4	4	58	16	232	5	41	50	122	50	122	230V 1ph 50/60Hz	115V 1ph 50/60Hz	24V DC	BSPP	<75

Flow Rates

Model	Pipe Size	Flow Rate			
		L/s	m³/min	m³/hr	cfm
BSP-MT 1	¼"	4	0.22	13	8
BSP-MT 2	¼"	7	0.40	24	14
BSP-MT 3	¼"	11	0.67	40	24
BSP-MT 4	¼"	16	0.94	56	33

Stated flows are for operation at 13 bar (g) (189 psi g), 35°C (95°F) with reference to 20°C, 1 bar (a), 0% relative water vapour pressure.

For flows at other conditions, apply the correction factors shown below.

Product Selection & Correction Factors

For correct operation, compressed air dryers must be sized using for the maximum (summer) inlet temperature, maximum (summer) ambient temperature, minimum inlet pressure, required outlet dewpoint and maximum flow rate of the installation.

To select a dryer, first calculate the MDC (Minimum Drying Capacity) using the formula below then select a dryer from the flow rate table above with a flow rate equal to or above the MDC.

Minimum Drying Capacity = System Flow x CFIT x CFAT x CFMIP

CFIT - Correction Factor Maximum Inlet Temperature

Maximum Inlet Temperature	°C	25	30	35	40	45	50
	°F	77	86	95	104	113	122
Correction Factor		0.95	0.97	1.00	1.20	1.30	1.35

CFAT - Correction Factor Maximum Ambient Temperature

Maximum Ambient Temperature	°C	25	30	35	40	45	50
	°F	77	86	95	104	113	122
Correction Factor		1.00	1.00	1.00	1.00	1.00	1.00

CFMIP - Correction Factor Minimum Inlet Pressure

Minimum Inlet Pressure	bar g	4	5	6	7	8	9	10	11	12	13	14	15	16
	psi g	58	73	87	100	116	131	145	160	174	189	203	218	232
Correction Factor		2.60	2.24	1.93	1.68	1.46	1.37	1.32	1.29	1.18	1.00	0.95	0.82	0.77

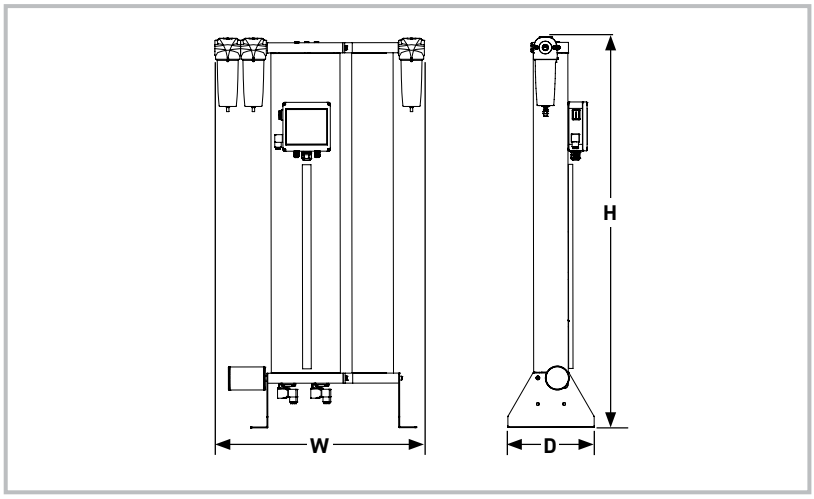

Weights & Dimensions

Model	Dimensions						Weight	
	Height (H)		Width (W)		Depth (D)			
	mm	ins	mm	ins	mm	ins	kg	lbs
BSP-MT 1	403	16	575	22.68	216	8.5	16.5	36.4
BSP-MT 2	578	23	575	22.6	216	8.5	21.5	47.4
BSP-MT 3	828	33	575	22.6	216	8.5	29.0	63.9
BSP-MT 4	1078	42	575	22.6	216	8.5	36.0	79.4

Included Filtration

Models	Dryer Inlet		Dryer Outlet
	General Purpose Pre-filter	High Efficiency Filter	General Purpose Dry Particulate Filter
BSP-MT 1-4	•	•	•

Filtration Performance

	General Purpose Pre-filter	High Efficiency Filter	General Purpose Dry Particulate Filter
Filtration Grade	AO	AA	AO
Filtration Type	Coalescing	Coalescing	Dry Particulate
Particle Reduction (inc water & oil aerosols)	Down to 1 micron	Down to 0.01 micron	Down to 1 micron
Maximum Remaining Oil Aerosol Content at 21°C	⩽0.5 mg/m³ (⩽0.5 ppm(w))	⩽0.01 mg/m³ (⩽0.01 ppm(w))	N/A
Maximum Remaining Oil Vapour Content at System Temperature	N/A	N/A	N/A
Filtration Efficiency	99.925%	99.9999%	99.925%

Parker Catalogue Numbers

Model	No Dewpoint Control	With Dewpoint Control
BSP-MT1	K1/16BP3-G230M	K1/16BP3-G230MT
BSP-MT2	K2/16BP3-G230M	K2/16BP3-G230MT
BSP-MT3	K3/16BP3-G230M	K3/16BP3-G230MT
BSP-MT4	K4/16BP3-G230M	K4/16BP3-G230MT

BAS HL Breathable Compressed Air Purifiers

Performance

Model	Dewpoint (Standard)		ISO8573-1:2010 Classification (Standard)
	°C	°F	
BAS HL	-40	-40	Class 1.2.0

Technical Data

Dryer Models	Minimum Operating Pressure		Maximum Operating Pressure		Minimum Operating Temperature		Maximum Operating Temperature		Maximum Ambient Temperature		Electrical Supply (Standard)	Electrical Supply (Optional)	Electrical Supply (Optional)*	Thread Type	Noise Level
	bar g	psi g	bar g	psi g	°C	°F	°C	°F	°C	°F					dB(A)
BAS HL 050 - 085	4	58	16	232	5	41	35	95	55	131	85 - 265V 1ph 50/60Hz	24V DC	N/A	BSPP or NPT	<75

*Available for BAS HL 050 Only.

Flow Rates

Model	Pipe Size	Inlet Flow Rate			
		L/s	m³/min	m³/hr	cfm
BAS HL 050	½"	15	0.92	55	32
BAS HL 055	½"	19	1.17	70	41
BAS HL 060	½"	25	1.50	90	53
BAS HL 065	½"	31	1.84	110	65
BAS HL 070	¾"	42	2.51	150	88
BAS HL 075	1"	51	3.09	185	109
BAS HL 080	1"	61	3.67	220	129
BAS HL 085	1½"	83	5.01	300	177

Stated flows are for operation at 7 bar (g) (102 psi g) with reference to 20°C, 1 bar (a), 0% relative water vapour pressure. For flows at other pressures, apply the correction factors shown below.

Product Selection & Correction Factors

For correct operation, compressed air dryers must be sized using for the maximum (summer) inlet temperature, maximum (summer) ambient temperature, minimum inlet pressure, required outlet dewpoint and maximum flow rate of the installation.

To select a dryer, first calculate the MDC (Minimum Drying Capacity) using the formula below then select a dryer from the flow rate table above with a flow rate equal to or above the MDC.

Minimum Drying Capacity = System Flow x CFIT x CFAT x CFMIP

CFIT - Correction Factor Maximum Inlet Temperature

Maximum Inlet Temperature	°C	25	30	35
	°F	77	86	95
Correction Factor		1.00	1.00	1.00

CFAT - Correction Factor Maximum Ambient Temperature

Maximum Ambient Temperature	°C	25	30	35	40	45	50
	°F	77	86	95	104	113	122
Correction Factor		1.00	1.00	1.00	1.00	1.00	1.00

CFMIP - Correction Factor Minimum Inlet Pressure

Minimum Inlet Pressure	bar g	4	5	6	7	8	9	10	11	12	13	14	15	16
	psi g	58	73	87	100	116	131	145	160	174	189	203	218	232
Correction Factor		1.60	1.33	1.14	1.00	1.00	1.00	1.00	1.00	1.00	1.00	1.00	1.00	1.00

CFOD - Correction Factor Dewpoint

Maximum Inlet Temperature	°C	-40
	°F	-40
Correction Factor		1.00

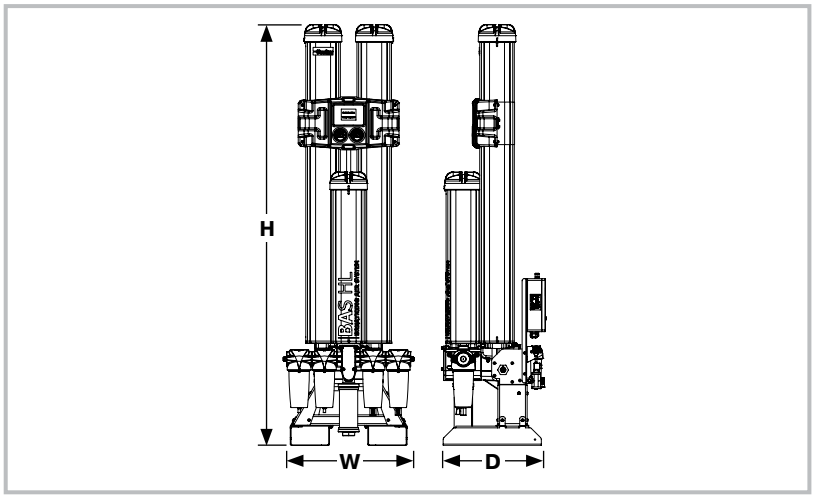

Weights & Dimensions

Model	Dimensions						Weight	
	Height (H)		Width (W)		Depth (D)			
	mm	ins	mm	ins	mm	ins	kg	lbs
BAS HL 050	1133	45	559	22	512	20.2	92	203
BAS HL 055	1313	52	559	22	512	20.2	99	218
BAS HL 060	1510	59	559	22	496	19.5	109	240
BAS HL 065	1660	65	559	22	496	19.5	115	254
BAS HL 070	2020	80	630	24.8	496	19.5	138	304
BAS HL 075	1595	63	630	24.8	682	27	196	432
BAS HL 080	1745	69	630	24.8	682	27	220	485
BAS HL 085	2105	83	630	24.8	682	27	255	562

Included Filtration

Model	Dryer Inlet		Dryer Outlet		
	General Purpose Coalescing Filter	High Efficiency Coalescing Filter	Oil Vapour Reduction Filter & Catalyst Stage	General Purpose Dry Particulate Filter	High Efficiency Dry Particulate Filter
BAS HL 050 - BAS HL 085	•	•	•	•	•

Filtration Performance

	General Purpose Coalescing Filter	High Efficiency Coalescing Filter	Oil Vapour Reduction Filter & Catalyst	General Purpose Dry Particulate Filter	High Efficiency Dry Particulate Filter
Filtration Grade	Grade AO	Grade AA	OVR	Grade AO	Grade AA
Filtration Type	Coalescing	Coalescing	Adsorption	Dry Particulate	Coalescing
Particle Reduction (inc water & oil aerosols)	Down to 1 micron	Down to 0.01 micron	N/A	Down to 1 micron	Down to 0.01 micron
Maximum Remaining Oil Aerosol Content at 21°C	⩽0.5 mg/m³ (⩽0.5 ppm(w))	⩽0.01 mg/m³ (⩽0.01 ppm(w))	N/A	N/A	N/A
Maximum Remaining Oil Vapour Content at System Temperature	N/A	N/A	⩽0.003 mg/m³ (⩽0.003 ppm(w))	N/A	N/A
Filtration Efficiency	99.925%	99.9999%	N/A	99.925%	99.9999%

Parker Catalogue Numbers

Model	BSPP	NPT	BSPP/Pneumatic
BAS HL 050	BASHL050-40G16AE	BASHL050-40N16AE	BASHL050-40G16PP
BAS HL 055	BASHL055-40G16AE	BASHL055-40N16AE	-
BAS HL 060	BASHL060-40G16AE	BASHL060-40N16AE	-
BAS HL 065	BASHL065-40G16AE	BASHL065-40N16AE	-
BAS HL 070	BASHL070-40G16AE	BASHL070-40N16AE	-
BAS HL 075	BASHL075-40G16AE	BASHL075-40N16AE	-
BAS HL 080	BASHL080-40G16AE	BASHL080-40N16AE	-
BAS HL 085	BASHL085-40G16AE	BASHL085-40N16AE	-

BAM Breathable Compressed Air Purifiers

Dryer Performance

Model	Dewpoint (Standard)		ISO8573-1:2010 Classification (Standard)
	°C	°F	
BAM	-40	-40	Class 1.2.1

Technical Data

Model	Minimum Operating Pressure		Maximum Operating Pressure		Minimum Operating Temperature		Maximum Operating Temperature		Maximum Ambient Temperature		Electrical Supply (Standard)	Thread Type	Noise Level
	bar g	psi g	bar g	psi g	°C	°F	°C	°F	°C	°F			dB(A)
BAM 10 - 70	4	58	13	190	5	41	35	95	55	131	85 - 265V 1ph 50/60Hz	BSPP or NPT	<75

Flow Rates

Model	Pipe Size	Inlet Flow Rate				Regeneration Air Requirement			
		L/s	m³/min	m³/hr	cfm	L/s	m³/min	m³/hr	cfm
BAM10	G2	113	6.81	408	240	22.6	1.36	82	48
BAM20	G2	170	10.22	612	360	34.0	2.04	122	72
BAM30	G2	213	12.78	795	450	42.6	2.60	159	90
BAM40	G2	283	17	1020	600	56.6	3.40	204	120
BAM50	G2½	354	21	1275	750	70.8	4.20	255	150
BAM70	G2½	496	30	1785	1050	99.2	6.00	357	210

Stated flows are for operation at 7 bar (g) (102 psi g) with reference to 20°C, 1 bar (a), 0% relative water vapour pressure.
For flows at other conditions, apply the correction factors shown below.

Product Selection & Correction Factors

For correct operation, breathing air purifiers must be sized using for the maximum (summer) inlet temperature, minimum inlet pressure and maximum flow rate of the installation.

To select a breathing air purifier, first calculate the MPC (Minimum Purification Capacity) using the formula below then select a breathing air purifier from the flow rate table above with a flow rate equal to or above the MPC.

Minimum Purification Capacity = System Flow x CFMIT x CFMIP

CFIT - Correction Factor Maximum Inlet Temperature

Maximum Inlet Temperature	°C	25	30	35
	°F	77	86	95
Correction Factor		1.00	1.20	1.00

CFMIP - Correction Factor Minimum Inlet Pressure

Minimum Inlet Pressure	bar g	4	5	6	7	8	9	10	11	12	13
	psi g	58	73	87	100	116	131	145	160	174	189
Correction Factor		1.60	1.33	1.14	1.00	0.89	0.80	0.73	0.67	0.62	0.57

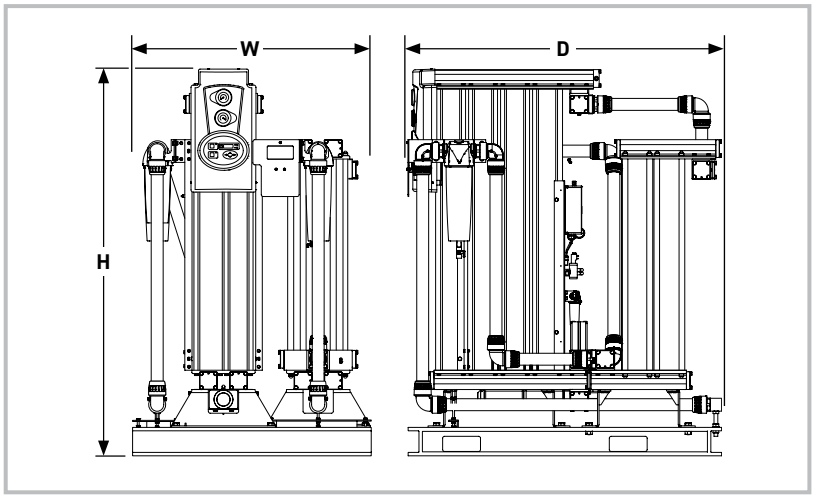

Weights & Dimensions

Model	Dimensions						Weight	
	Height (H)		Width (W)		Depth (D)			
	mm	ins	mm	ins	mm	ins	kg	lbs
BAM10	1797	70.7	1260	49.6	1655	65.2	600	1322
BAM20	1797	70.7	1260	49.6	1655	65.2	700	1543
BAM30	2042	80.4	1260	49.6	1655	65.2	800	1763
BAM40	2042	80.4	1260	49.6	1655	65.2	900	1984
BAM50	2042	80.4	1260	49.6	1950	76.8	1100	2425
BAM70	2042	80.4	1260	49.6	1950	76.8	1400	3086

Included Filtration

Models	Pipe Size BSPP or NPT	Dryer Inlet		Dryer Outlet		
		General Purpose Coalescing Filter	High Efficiency Coalescing Filter	Oil Vapour Reduction Filter & Catalyst Stage	General Purpose Dry Particulate Filter	High Efficiency Dry Particulate Filter
BAM10 - BAM70	2"	•	•	•	•	•

Filtration Performance

	General Purpose Coalescing Filter	High Efficiency Coalescing Filter	Oil Vapour Reduction Filter & Catalyst Stage	General Purpose Dry Particulate Filter	High Efficiency Dry Particulate Filter
Filtration Grade	Grade AO	Grade AA	OVR	Grade AO	Grade AA
Filtration Type	Coalescing	Coalescing	Adsorption	Dry Particulate	Coalescing
Particle Reduction (inc water & oil aerosols)	Down to 1 micron	Down to 0.01 micron	N/A	Down to 1 micron	Down to 0.01 micron
Maximum Remaining Oil Aerosol Content at 21°C	⩽0.5 mg/m³ (⩽0.5 ppm(w))	⩽0.01 mg/m³ (⩽0.01 ppm(w))	N/A	N/A	N/A
Maximum Remaining Oil Vapour Content at System Temperature	N/A	N/A	⩽0.003 mg/m³ (⩽0.003 ppm(w))	N/A	N/A
Filtration Efficiency	99.925%	99.9999%	N/A	99.925%	99.9999%

Parker Catalogue Numbers

Model	Standard
BAM10	BAM10
BAM20	BAM20
BAM30	BAM30
BAM40	BAM40
BAM50	BAM50
BAM60	BAM60
BAM70	BAM70

Liquid Condensate Drainage and Disposal

- CDAS/OFAS/FBP treatment systems are supplied with general purpose and high efficiency coalescing filters and an adsorption dryer.
- Adsorption dryers are designed only for the treatment of water vapour, not liquid water, liquid oil, water aerosols, oil aerosols, or liquid compressor condensate.
- Coalescing filters are designed only for the treatment of oil and water aerosols, not liquid water, liquid oil or liquid compressor condensate.
- The float drains included with coalescing filters are only designed for the small volume of aerosols captured by the filter.
- Coalescing filter float drains are unable to drain the volume of liquid produced by a compressor aftercooler.
- Pre-drainage of all liquids prior to the coalescing filters is mandatory.
- Correct piping of the filter drain discharge is also required to prevent drain blockage and to ensure filters are not flooded with liquid condensate.
- The liquid condensate produced by the air compressor aftercooler (and wet air receiver if fitted) **MUST** be drained from the compressed air system prior to the compressed air entering the CDAS/OFAS/FBP treatment system.
- An OIL-X Grade WS liquid separator must be fitter prior to the coalescing filters, ensuring the condensate drain is sized adequately for the volume of liquid condensate (i.e. timed solenoid drain or electronic level sensing drain).
- Dryer warranty will be invalid if the coalescing filters and/or adsorption dryer are flooded or damaged by liquids (including liquid overflow due to incorrect piping of drain discharge lines).

Liquid Condensate Drainage Prior to the Treatment System

If the air compressor is fitted with an aftercooler liquid separator/drain combination, ensure that the condensate drain is operating correctly, drain discharge piping is not blocked, and condensate can flow without obstruction.

Failure of the condensate drain will allow the condensate produced at the aftercooler to flood and overwhelm downstream purification equipment, invalidating warranty.

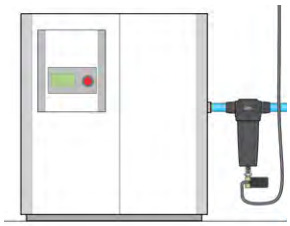

Compressor with Liquid Separator at Outlet

If the air compressor is **NOT** fitted with an aftercooler liquid separator/drain combination, a Parker OIL-X Grade WS liquid separator should be installed at the outlet of the air compressor.

Important Notes:

- A wet air receiver should not be relied upon as a sole point of liquid condensate drainage before the downstream treatment system, nor should it be used as a replacement for the aftercooler liquid separator.
- The liquid separator drain must be sized and selected based upon the volume of condensate produced at this point in the compressed air system.
- Use Parker OIL-X Grade WS liquid separator variants supplied with a timed solenoid drain (selecting T1 variant for 230V AC or T2 variant for 115V AC) or fit an electronic level sensing drain.
- Ensure that the condensate drain is operating correctly, drain discharge piping is not blocked, and condensate can flow without obstruction.
- Failure of the condensate drain will allow the condensate produced at the aftercooler to flood and overwhelm downstream purification equipment, invalidating all warranties.

Condensate Drain Installation Recommendations

Wet Air Receiver

If a wet air receiver is installed, a timed solenoid drain or an electronic level sensing drain sized for the full system condensate loading must be installed.

Wet air receivers typically contain rust, therefore a suitable strainer device must be installed to protect the condensate drain (regular checks must also be made to ensure that the strainer is not blocked).

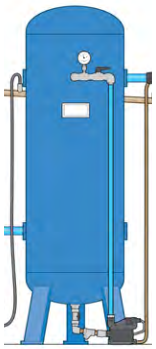

Wet Air Receiver

If a level sensing drain is fitted to a wet air receiver, the drain must be connected using the lower drain inlet connection.

The upper drain inlet connection must be used to connect a balance line to a point of equal pressure above the condensate level (e.g. the air receiver pressure gauge port).

This is to prevent a condensate air lock which will prevent the drain from operating correctly.

Failure of the wet air receiver condensate drain to adequately remove the condensate will flood and overwhelm downstream purification equipment, invalidating all warranties.

CDAS/OFAS/FBP Pre-treatment

An OIL-X Grade WS liquid separator must be installed immediately upstream of the OIL-X coalescing filters, even if drainage is provided upstream (this ensures liquid removal if one or more of the upstream condensate drains malfunction).

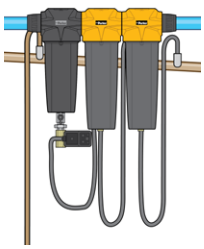

Liquid Separator and Coalescing Filters

The liquid separator drain must be sized and selected based upon the volume of condensate produced at this point in the compressed air system and the upstream volume should an upstream drain fail.

Use Parker OIL-X Grade WS liquid separator variants supplied with a timed solenoid drain (selecting T1 variant for 230V AC or T2 variant for 115V AC) or fit an electronic level sensing drain.

Coalescing Filter Float Drains

Ensure that each condensate drain is individually piped away, and any effluent is disposed of in a legal and responsible manner and in accordance with local environmental regulations.

Condensate drain outlet piping should **NEVER** be connected together, especially if a timed solenoid drain is fitted.

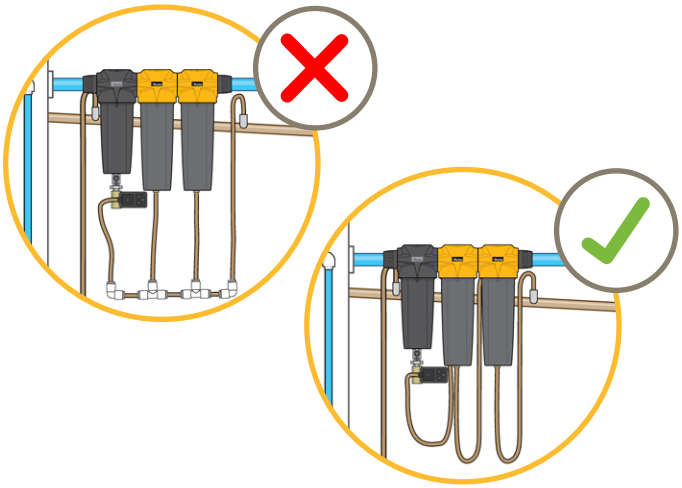

When zero air loss float drains or zero air loss electronic level sensing drains discharge condensate, the condensate is no longer at system pressure.

Condensate is therefore draining under gravity – never try to push condensate from a float drain too high vertically or over long distances.

Connect a dedicated outlet pipe to each condensate drain.

Float drain outlet piping internal diameter should be a minimum of 4mm or larger to eliminate back pressure which would prevent drainage of condensate.

Condensate drain outlet piping should be kept to a short length (<1.75m) to eliminate back pressure which would prevent drainage of condensate.

It is recommended to connect each individual drain discharge pipe to a common, sloping, vented condensate manifold feeding into the inlet of the oil/water separator (gravity feed).

Alternatively, if condensate needs to be transported over long distances or to a height >1.75m above the condensate drain (to allow it to be fed into an oil/water separator), drain the condensate under gravity to a collection container and use a pump to feed the oil/water separator.

If using a collection container and pump, always ensure that the volume of condensate pumped when the pump is active is small and does not overflow the oil/water separator or create a stable emulsion.

Failure of the filter condensate drains to adequately remove the condensate due to incorrect installation and routing of the discharge piping will invalidate all warranties.

Typical Compressed Air Treatment System with Liquid Condensate Drainage

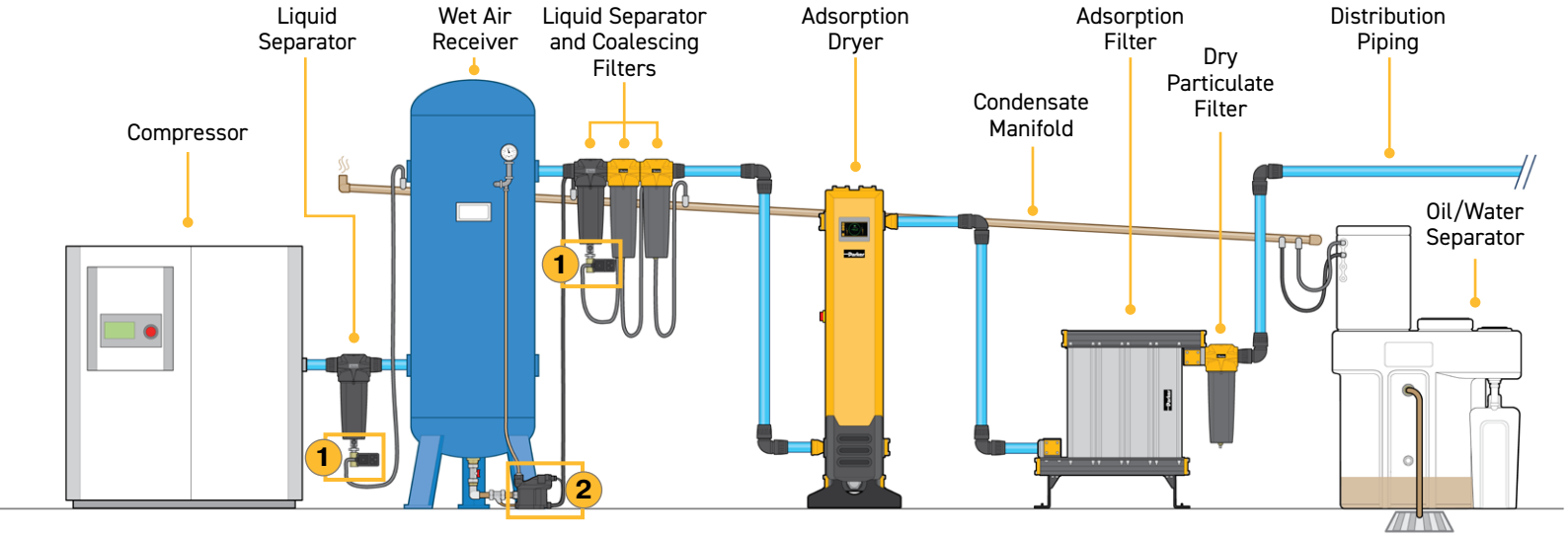

Drain Selection

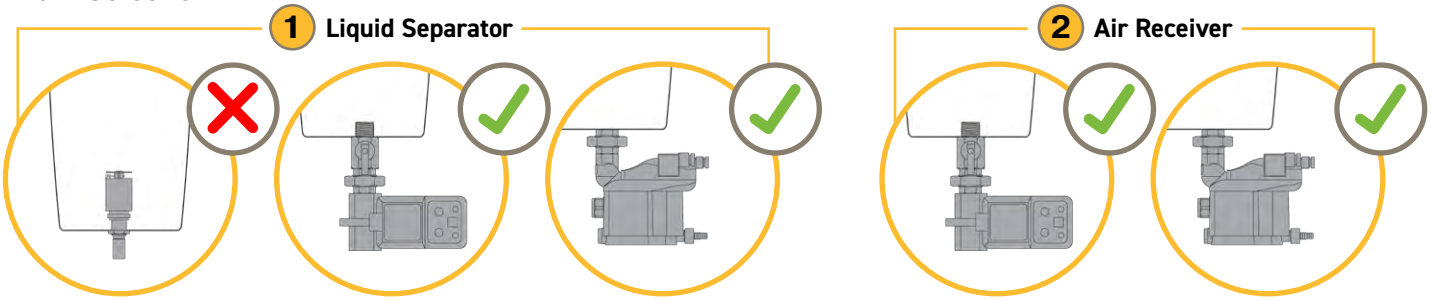

OIL-X WS
Float Drain
(standard)

OIL-X WS
T1/T2 Timed
Solenoid Drain (options)

EDE
Electronic Level
Sensing Drain

CDV
Timed
Solenoid Drain

EDE
Electronic Level
Sensing Drain

HDF, EDE and CDV Condensate Drains

Technical Data

Drain Type	Drain Models	Minimum Operating Pressure		Maximum Operating Pressure		Minimum Operating Temperature		Maximum Operating Temperature	
		bar g	psi g	bar g	psi g	°C	°F	°C	°F
External Float	HDF120 - 220	1	15	16	232	2	35	60	140
Electronic Level Sensing	EDE060 - EDE6002	0.2	3	16	232	1	34	60	140
HP Electronic Level Sensing	ED4100	16	232	50	725	2	35	50	122
Time Controlled	CDV50	1	15	17.25	250	2	35	80	176

Flow Rates - Zero Air Loss External Float Drains

Model	Pipe Size		Compressed Air Flow Rate				Electrical Supply
	Inlet	Outlet	L/S	m³/min	m³/hr	cfm	
HDF120-A	½"	½"	1500	90	5400	3178	N/A
HDF180-A	1"	½"	1667	100	6000	3532	N/A
HDF220-A	1"	½"	4167	251	15000	8829	N/A
External float drain (with built-in air vent)							
HDF120	½"	½"	1500	90	5400	3178	N/A
HDF180	1"	½"	1667	100	6000	3532	N/A
HDF220	1"	½"	4167	251	15000	8829	N/A
External float drain (without air vent)							
HDF220BE	1"	½"	1806	109	6500	3826	N/A
External float drains BioEnergy							

Flow Rates - Zero Air Loss Electronic Level Sensing Drains

Model	Pipe Size		Maxium Compressed Air Flow Rate*									Electrical Supply**
			Aftercooler/ Air Receiver			Refrigeration Dryer			Filter			
	Inlet	Outlet	L/S	m³/hr	cfm	L/S	m³/hr	cfm	L/S	m³/hr	cfm	
EDE0060	G½ M	Ø 12mm	50	180	106	100	360	212	499	1,800	52	230V/50-60Hz*
EDE0120	G½ F	Ø 12mm	105	378	222	210	756	445	1048	3,780	23	230V/50-60Hz*
EDE0150	G½ F	Ø 12mm	125	450	265	250	900	530	1246.5	4,500	31	230V/50-60Hz*
EDE0300	G½ F	Ø 12mm	250	900	530	499	1,800	1059	2493	9,000	31	230V/50-60Hz*
EDE0601	G½ F	Ø 12mm	499	1,800	1059	998	3,600	2119	4986	18,000	34	230V/50-60Hz*
EDE3200	G½ F	Ø 12mm	2660	9,600	5651	5318	19,200	11301	26592	96,000	49	230V/50-60Hz*
EDE6002	G½ F	Ø 12mm	4986	18,000	10595	9972	36,000	21190	49860	180,000	62	230V/50-60Hz*
ED4100/50-G230	G½	G¼	1667	6000	3532	3334	12000	7063	16668	60000	35316	230/1/50-60Hz
ED4100/50-G24D	G½	G¼	1667	6000	3532	3334	12000	7063	16668	60000	35316	24V DC

*Stated flows are based on sizing related to climate zone 2 conditions at 7 bar (g) (102 psi g) with ambient suction air temperature of 25°C (77°F) and 60% RH with a compressor air discharge temperature of 35°C (95°F). For refrigeration drying equipment, a pressure dewpoint 3°C (37°F) with reference to 20°C, 1 bar (A), 0% relative water vapour pressure is applied. Refrigeration dryer and filters flow rates assume adequate condensate drainage has been applied upstream.

**Other electrical options available, see next page.

Flow Rates - Time Controlled Drains

Model	Pipe Size		Maximum Compressed Air Flow Rate			Electrical Supply
	Inlet	Outlet	L/S	m³/hr	cfm	
CDV50-115	½"	⅜"	2,500	9,000	5,297	230V/50-60Hz
CDV50-230	½"	⅜"	2,500	9,000	5,297	115V/1ph 50-60Hz

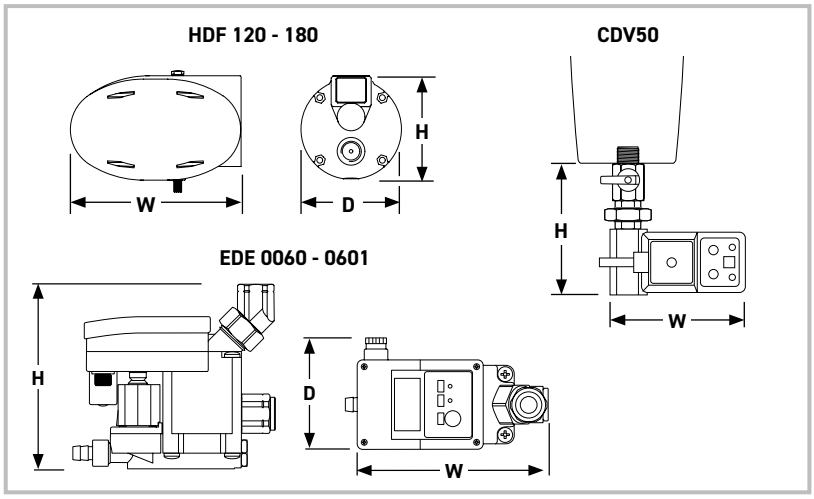

EDE Drain

HDF Drain

CDV50

Weight & Dimensions

Model	Height (H)		Width (W)		Depth (D)		Weight	
	mm	ins	mm	ins	mm	ins	kg	lbs
HDF120	111	4.4	156	6.1	108	4.3	0.9	2.0
HDF180	111	4.4	156	6.1	108	4.3	0.9	2.0
HDF220	111	4.4	266	10.5	108	4.3	1.9	4.2
HDF220BE	111	4.4	266	10.5	108	4.3	1.9	4.2
EDE0060	120	4.7	136	5.4	136	5.4	0.4	0.88
EDE0120	107	4.2	160	6.3	160	6.3	0.5	1.1
EDE0150	140	5.5	163	6.4	163	6.4	0.6	1.32
EDE0300	155	6. 1	163	6.4	163	6.4	0.7	1.54
EDE0601	214	8.4	163	6.4	163	6.4	1.2	2.64
EDE3200	230	9.1	173	6.8	173	6.8	1.8	3.96
EDE6002	230	9.1	250	9.8	250	9.8	3.45	8
ED4100	115	4.5	178	7.0	87	3.4	1.9	4.2
CDV50	125	4.92	100	3.93	20	0.8	0.75	1.65

Parker Catalogue Numbers (HDF Drains)

Model	BSPP / 16 bar g	BSPP / 16 bar g + Vent	NPT / 16 bar g + Vent
HDF120	HDF120	HDF120A	HDF120NPTA
HDF180	HDF180	HDF180A	HDF180NPTA
HDF220	HDF220	HDF220A	HDF220NPTA

Parker Catalogue Numbers (ED Drains)

Model	230V, 50-60 Hz / 16 bar g	24V DC / 16 bar g	115V, 50-60 Hz /16 bar g
EDE0060	EDE0060-G230	EDE0060-G24D	EDE0060-N115UL
EDE0120	EDE0120-G230	EDE0120-G24D	EDE0120-N115UL
EDE0150	EDE0150-G230	EDE0150-G24D	EDE0150-N115UL
EDE0300	EDE0300-G230	EDE0300-G24D	EDE0300-N115UL
EDE0601	EDE3200-G230	EDE3200-G24D	EDE3200-N115UL
EDE3200	EDE0601-G230	EDE0601-G24D	EDE0601-N115UL
EDE6002	EDE6002-G230	EDE6002-G24D	EDE6002-N115UL
ED4100	ED4100/50-G230	ED4100/50-G24D	ED4100/50-N115

EDE0060 to EDE6002

ED4100

Parker Catalogue Numbers (CDV Drains)

Model	230V, 50-60 Hz / 16 bar g	115V, 50-60 Hz / 16 bar g
CDV50	CDV50-230	CDV50-115

ES2000 Series Oil/Water Separators

Product Selection

Correct selection is critical for the operation of oil/water separators. Increased condensate flow through an oil/water separator reduces settlement time in the main tank, increases oil carryover to the carbon stage & reduces contact time with the carbon. The overall effect of incorrect sizing is poor outlet water quality, reduced carbon filter life and the potential for overflowing.

Capacities shown in this catalogue assume installation in two of the world's major climatic conditions. Should the oil/water separator be installed in conditions other than those shown, please contact your local Parker outlet or approved distributor/ agent for correct sizing.

Oil Types

To simplify the selection, lubricant classifications have been split into three bands depending upon their ability to separate within a static type oil/water separator.

Band A: Turbine Oil
Additive Free Oil

Band B: Mineral
Poly alpha olefins (PAO)
Trimethylolpropane Ester (TMP)
Pentaerythrityl Ester (PE)

Band C: Diesters
Triesters
Polyoxyalkylene glycol (PAG)

Inseparable using static separation techniques:
Automatic transmission fluid (ATF)

Drain Types

The condensate should be removed from the compressed air system using a drainage method that does not cause emulsification of the condensate and is appropriate for the unit. Usual methods include:

- **Electronic Level Sensing Drain**
- **Float Drain**
- **Timed Solenoid Drain***

Manual and thermodynamic disc trap drains must not be used with the ES2000 Series oil/water separators.

*When using timed solenoid drains care must be taken to reduce the air loss as this has an emulsifying effect on the condensate.

Refrigeration Dryers

A refrigeration dryer installed in a compressed air system can significantly increase the condensate produced.

- The oil/water separator must be sized appropriately to treat the extra condensate produced.
- Flow capacities shown in this document are both with and without a refrigeration dryer installed.

Important Note:

Additives blended into the lubricants to prevent bacterial growth, rusting, corrosion, and to promote emulsification, such as detergents etc., can have an impact on the separating process. Static oil/water separators are unable to separate stable emulsions or oils that are miscible in water. Additionally, these units will not totally separate lubricants containing: Emulsifying Agents; Glycol additives; or Polyglycol based coolants.

Climate Condition 1 - Outlet quality: <20mg/l oil in water

System Conditions

Ambient Temperature at Compressor Inlet:	25°C (77°F)	**Relative Humidity:**	65%	**Refrigeration Dryer Dewpoint If Fitted:**	3°C (37°F)
Compressor Discharge Temperature:	35°C (95°F)	**System Pressure:**	7 bar g (102 psi g)	**Minimum System Temperature If Refrigeration Dryer Is Not Fitted:**	30°C (86°F)
		Outlet Quality:	<20mg/l oil in water		

No Refrigeration Dryer Installed in System		Oil Type											
		Band A Turbine, Additive Free				Band B Mineral, PAO, TMP, PE				Band C Diesters, Triesters, PAG			
Compressor Type	**Model**	**L/s**	**m³/min**	**m³/hr**	**cfm**	**L/s**	**m³/min**	**m³/hr**	**cfm**	**L/s**	**m³/min**	**m³/hr**	**cfm**
Rotary Screw, Vane	**ES2100**	36.9	2.2	133	78	30.8	1.9	111	66	25.6	1.5	92	54
	ES2150	58.6	3.5	211	124	50.0	3	180	106	40.6	2.4	146	86
	ES2200	90.3	5.4	325	191	76.7	4.6	276	163	62.5	3.7	225	132
	ES2300	126.7	7.6	456	268	106.4	6.4	383	225	87.5	5.3	315	185
	ES2400	253.4	15.2	912	537	212.8	12.8	766	451	175.0	10.5	630	371
	ES2500	501.4	30.1	1805	1062	425.0	25.5	1530	900	346.4	20.8	1247	734
	ES2600	997.6	59.9	3591	2114	849.2	51	3057	1800	689.5	41.4	2482	1461

Refrigeration Dryer Installed in System		Oil Type											
		Band A Turbine, Additive Free				Band B Mineral, PAO, TMP, PE				Band C Diesters, Triesters, PAG			
Compressor Type	**Model**	**L/s**	**m³/min**	**m³/hr**	**cfm**	**L/s**	**m³/min**	**m³/hr**	**cfm**	**L/s**	**m³/min**	**m³/hr**	**cfm**
Rotary Screw, Vane	**ES2100**	27.8	1.7	100	59	23.3	1.4	84	49	19.2	1.2	69	41
	ES2150	43.9	2.6	158	93	37.5	2.3	135	80	30.6	1.8	110	65
	ES2200	67.8	4.1	244	144	57.8	3.5	208	122	46.9	2.8	169	99
	ES2300	95.3	5.7	343	202	80.0	4.8	288	169	65.8	3.9	237	139
	ES2400	190.3	11.4	685	403	159.7	9.6	575	339	131.7	7.9	474	279
	ES2500	377.0	22.6	1357	798	319.2	19.2	1149	677	260.6	15.6	938	552
	ES2600	749.8	45	2699	1589	638.4	38.3	2298	1352	518.1	31.1	1865	1098

Climate Condition 2 - Outlet quality: <20mg/l oil in water

System Conditions

Ambient Temperature at Compressor Inlet:	35°C (95°F)	**Relative Humidity:**	85%	**Refrigeration Dryer Dewpoint If Fitted:**	3°C (37°F)
Compressor Discharge Temperature:	45°C (113°F)	**System Pressure:**	7 bar g (102 psi g)	**Minimum System Temperature If Refrigeration Dryer Is Not Fitted:**	40°C (104°F)
		Outlet Quality:	<20mg/l oil in water		

No Refrigeration Dryer Installed in System		Oil Type											
		Band A Turbine, Additive Free				Band B Mineral, PAO, TMP, PE				Band C Diesters, Triesters, PAG			
Compressor Type	**Model**	**L/s**	**m³/min**	**m³/hr**	**cfm**	**L/s**	**m³/min**	**m³/hr**	**cfm**	**L/s**	**m³/min**	**m³/hr**	**cfm**
Rotary Screw, Vane	**ES2100**	13.9	0.8	50	30	11.7	0.7	42	25	9.7	0.6	35	21
	ES2150	22.2	1.3	80	47	18.9	1.1	68	40	15.6	0.9	56	33
	ES2200	34.2	2.1	123	73	29.2	1.7	105	62	23.6	1.4	85	50
	ES2300	48.1	2.9	173	102	40.3	2.4	145	85	33.1	2	119	70
	ES2400	96.1	5.8	346	204	80.6	4.8	290	171	66.4	4	239	141
	ES2500	190.0	11.4	684	403	161.1	9.7	580	341	131.4	7.9	473	278
	ES2600	378.4	22.7	1362	801	322.0	19.3	1159	682	261.4	15.7	941	554

Refrigeration Dryer Installed in System		Oil Type											
		Band A Turbine, Additive Free				Band B Mineral, PAO, TMP, PE				Band C Diesters, Triesters, PAG			
Compressor Type	**Model**	**L/s**	**m³/min**	**m³/hr**	**cfm**	**L/s**	**m³/min**	**m³/hr**	**cfm**	**L/s**	**m³/min**	**m³/hr**	**cfm**
Rotary Screw, Vane	**ES2100**	11.4	0.7	41	24	9.4	0.6	34	20	7.8	0.5	28	17
	ES2150	17.8	1.1	64	38	15.3	0.9	55	32	12.5	0.7	45	26
	ES2200	27.5	1.7	99	59	23.6	1.4	85	50	19.2	1.1	69	40
	ES2300	38.9	2.3	140	82	32.5	2	117	69	26.7	1.6	96	57
	ES2400	77.5	4.7	279	164	65.0	3.9	234	138	53.6	3.2	193	114
	ES2500	153.3	9.2	552	325	130.0	7.8	468	275	106.1	6.4	382	225
	ES2600	305.3	18.3	1099	647	260.0	15.6	936	551	210.9	12.7	759	447

For systems using 1 or 2 stage piston/reciprocating compressors multiply compressor flow by 1.4 and select a separator from screw compressor flow rates shown, ensuring due consideration is given to oil type. For sizing at conditions other than those shown, please contact Parker for correct product selection.

Climate Condition 1 - Outlet quality: <10mg/l oil in water

System Conditions

Ambient Temperature at Compressor Inlet:	25°C (77°F)	**Relative Humidity:**	65%	**Refrigeration Dryer Dewpoint If Fitted:**	3°C (37°F)
Compressor Discharge Temperature:	35°C (95°F)	**System Pressure:**	7 bar g (102 psi g)	**Minimum System Temperature If Refrigeration Dryer Is Not Fitted:**	30°C (86°F)
		Outlet quality:	<10mg/l oil in water		

No Refrigeration Dryer Installed in System		Oil Type											
		Band A Turbine, Additive Free				Band B Mineral, PAO, TMP, PE				Band C Diesters, Triesters, PAG			
Compressor Type	**Model**	**L/s**	**m³/min**	**m³/hr**	**cfm**	**L/s**	**m³/min**	**m³/hr**	**cfm**	**L/s**	**m³/min**	**m³/hr**	**cfm**
Rotary Screw, Vane	ES2100	20.6	1.2	74	43	17.2	1	62	36	14.2	0.9	51	30
	ES2150	32.5	2	117	69	27.8	1.7	100	59	22.5	1.4	81	48
	ES2200	50.3	3	181	106	42.5	2.6	153	90	34.7	2.1	125	73
	ES2300	70.3	4.2	253	149	59.2	3.5	213	125	48.6	2.9	175	103
	ES2400	140.8	8.4	507	298	118.1	7.1	425	250	97.2	5.8	350	206
	ES2500	278.6	16.7	1003	590	236.1	14.2	850	500	192.5	11.6	693	408
	ES2600	554.2	33.3	1995	1174	472.0	28.3	1699	1000	383.1	23	1379	812

Refrigeration Dryer Installed in System		Oil Type											
		Band A Turbine, Additive Free				Band B Mineral, PAO, TMP, PE				Band C Diesters, Triesters, PAG			
Compressor Type	**Model**	**L/s**	**m³/min**	**m³/hr**	**cfm**	**L/s**	**m³/min**	**m³/hr**	**cfm**	**L/s**	**m³/min**	**m³/hr**	**cfm**
Rotary Screw, Vane	ES2100	15.6	0.9	56	33	13.1	0.8	47	27	10.6	0.6	38	23
	ES2150	24.4	1.5	88	52	20.8	1.3	75	44	16.9	1	61	36
	ES2200	37.8	2.3	136	80	31.9	1.9	115	68	26.1	1.6	94	55
	ES2300	52.8	3.2	190	112	44.4	2.7	160	94	36.7	2.2	132	77
	ES2400	105.8	6.3	381	224	88.9	5.3	320	188	73.1	4.4	263	155
	ES2500	209.5	12.6	754	444	177.5	10.6	639	376	144.7	8.7	521	307
	ES2600	416.4	25	1499	883	354.8	21.3	1277	751	287.8	17.3	1036	610

Climate Condition 2 - Outlet quality: <10mg/l oil in water

System Conditions

Ambient Temperature at Compressor Inlet:	25°C (77°F)	**Relative Humidity:**	85%	**Refrigeration Dryer Dewpoint If Fitted:**	3°C (37°F)
Compressor Discharge Temperature:	40°C (104°F)	**System Pressure:**	7 bar g (102 psi g)	**Minimum System Temperature If Refrigeration Dryer Is Not Fitted:**	30°C (86°F)
		Outlet Quality:	<10mg/l oil in water		

No Refrigeration Dryer Installed in System		Oil Type											
		Band A Turbine, Additive Free				Band B Mineral, PAO, TMP, PE				Band C Diesters, Triesters, PAG			
Compressor Type	**Model**	**L/s**	**m³/min**	**m³/hr**	**cfm**	**L/s**	**m³/min**	**m³/hr**	**cfm**	**L/s**	**m³/min**	**m³/hr**	**cfm**
Rotary Screw, Vane	ES2100	7.8	0.5	28	16	6.4	0.4	23	14	5.3	0.3	19	11
	ES2150	12.2	0.7	44	26	10.6	0.6	38	22	8.6	0.5	31	18
	ES2200	18.9	1.1	68	40	16.1	1	58	34	13.1	0.8	47	28
	ES2300	26.7	1.6	96	57	22.5	1.3	81	47	18.3	1.1	66	39
	ES2400	53.3	3.2	192	113	44.7	2.7	161	95	36.9	2.2	133	78
	ES2500	105.6	6.3	380	224	89.5	5.4	322	190	73.1	4.4	263	155
	ES2600	210.0	12.6	756	445	178.9	10.7	644	379	145.3	8.7	523	308

Refrigeration Dryer Installed in System		Oil Type											
		Band A Turbine, Additive Free				Band B Mineral, PAO, TMP, PE				Band C Diesters, Triesters, PAG			
Compressor Type	**Model**	**L/s**	**m³/min**	**m³/hr**	**cfm**	**L/s**	**m³/min**	**m³/hr**	**cfm**	**L/s**	**m³/min**	**m³/hr**	**cfm**
Rotary Screw, Vane	ES2100	6.4	0.4	23	13	5.3	0.3	19	11	4.4	0.3	16	9
	ES2150	10.0	0.6	36	21	8.6	0.5	31	18	6.9	0.4	25	15
	ES2200	15.3	0.9	55	33	13.1	0.8	47	28	10.6	0.6	38	22
	ES2300	21.7	1.3	78	46	18.1	1.1	65	38	15.0	0.9	54	32
	ES2400	43.1	2.6	155	91	36.1	2.2	130	77	29.7	1.8	107	63
	ES2500	85.3	5.1	307	181	72.2	4.3	260	153	58.9	3.5	212	125
	ES2600	169.7	10.2	611	359	144.5	8.7	520	306	117.2	7	422	248

For systems using 1 or 2 stage piston/reciprocating compressors multiply compressor flow by 1.4 and select a separator from screw compressor flow rates shown, ensuring due consideration is given to oil type. For sizing at conditions other than those shown, please contact Parker for correct product selection.

Climate Condition 1 - Outlet quality: <5mg/l oil in water

System Conditions

Ambient Temperature at Compressor Inlet:	25°C (77°F)	**Relative Humidity:**	65%	**Refrigeration Dryer Dewpoint If Fitted:**	3°C (37°F)
Compressor Discharge Temperature:	35°C (95°F)	**System Pressure:**	7 bar g (102 psi g)	**Minimum System Temperature If Refrigeration Dryer Is Not Fitted:**	30°C (86°F)
		Outlet Quality:	<5mg/l oil in water		

No Refrigeration Dryer Installed in System		Oil Type											
		Band A Turbine, Additive Free				Band B Mineral, PAO, TMP, PE				Band C Diesters, Triesters, PAG			
Compressor Type	**Model**	**L/s**	**m³/min**	**m³/hr**	**cfm**	**L/s**	**m³/min**	**m³/hr**	**cfm**	**L/s**	**m³/min**	**m³/hr**	**cfm**
Rotary Screw, Vane	**ES2100**	10.3	0.6	37	22	8.6	0.5	31	18	7.2	0.4	26	15
	ES2150	16.4	1	59	34	13.9	0.8	50	29	11.4	0.7	41	24
	ES2200	25.0	1.5	90	53	21.4	1.3	77	45	17.2	1	62	37
	ES2300	35.3	2.1	127	75	29.4	1.8	106	63	24.4	1.5	88	52
	ES2400	70.3	4.2	253	149	59.2	3.5	213	125	48.6	2.9	175	103
	ES2500	139.2	8.4	501	295	118.1	7.1	425	250	96.4	5.8	347	204
	ES2600	277.2	16.6	998	587	235.9	14.2	849	500	191.4	11.5	689	406

Refrigeration Dryer Installed in System		Oil Type											
		Band A Turbine, Additive Free				Band B Mineral, PAO, TMP, PE				Band C Diesters, Triesters, PAG			
Compressor Type	**Model**	**L/s**	**m³/min**	**m³/hr**	**cfm**	**L/s**	**m³/min**	**m³/hr**	**cfm**	**L/s**	**m³/min**	**m³/hr**	**cfm**
Rotary Screw, Vane	**ES2100**	7.8	0.5	28	16	6.4	0.4	23	14	5.3	0.3	19	11
	ES2150	12.2	0.7	44	26	10.6	0.6	38	22	8.6	0.5	31	18
	ES2200	18.9	1.1	68	40	16.1	1	58	34	13.1	0.8	47	28
	ES2300	26.4	1.6	95	56	22.2	1.3	80	47	18.3	1.1	66	39
	ES2400	52.8	3.2	190	112	44.4	2.7	160	94	36.7	2.2	132	77
	ES2500	104.7	6.3	377	222	88.6	5.3	319	188	72.2	4.3	260	153
	ES2600	208.4	12.5	750	441	177.2	10.6	638	376	143.9	8.6	518	305

Climate Condition 2 - Outlet quality: <5mg/l oil in water

System Conditions

Ambient Temperature at Compressor Inlet:	35°C (95°F)	**Relative Humidity:**	85%	**Refrigeration Dryer Dewpoint If Fitted:**	3°C (37°F)
Compressor Discharge Temperature:	45°C (113°F)	**System Pressure:**	7 bar g (102 psi g)	**Minimum System Temperature If Refrigeration Dryer Is Not Fitted:**	40°C (104°F)
		Outlet Quality:	<5mg/l oil in water		

No Refrigeration Dryer Installed in System		Oil Type											
		Band A Turbine, Additive Free				Band B Mineral, PAO, TMP, PE				Band C Diesters, Triesters, PAG			
Compressor Type	**Model**	**L/s**	**m³/min**	**m³/hr**	**cfm**	**L/s**	**m³/min**	**m³/hr**	**cfm**	**L/s**	**m³/min**	**m³/hr**	**cfm**
Rotary Screw, Vane	**ES2100**	3.9	0.2	14	8	3.3	0.2	12	7	2.8	0.2	10	6
	ES2150	6.1	0.4	22	13	5.3	0.3	19	11	4.2	0.3	15	9
	ES2200	9.4	0.6	34	20	8.1	0.5	29	17	6.7	0.4	24	14
	ES2300	13.3	0.8	48	28	11.1	0.7	40	24	9.2	0.6	33	20
	ES2400	26.7	1.6	96	57	22.5	1.3	81	47	18.3	1.1	66	39
	ES2500	52.8	3.2	190	112	44.7	2.7	161	95	36.4	2.2	131	77
	ES2600	105.0	6.3	378	223	89.5	5.4	322	190	72.5	4.4	261	154

Refrigeration Dryer Installed in System		Oil Type											
		Band A Turbine, Additive Free				Band B Mineral, PAO, TMP, PE				Band C Diesters, Triesters, PAG			
Compressor Type	**Model**	**L/s**	**m³/min**	**m³/hr**	**cfm**	**L/s**	**m³/min**	**m³/hr**	**cfm**	**L/s**	**m³/min**	**m³/hr**	**cfm**
Rotary Screw, Vane	**ES2100**	3.1	0.2	11	7	2.5	0.2	9	6	2.2	0.1	8	5
	ES2150	5.0	0.3	18	11	4.2	0.3	15	9	3.3	0.2	12	7
	ES2200	7.8	0.5	28	16	6.4	0.4	23	14	5.3	0.3	19	11
	ES2300	10.8	0.6	39	23	9.2	0.5	33	19	7.5	0.4	27	16
	ES2400	21.7	1.3	78	46	18.1	1.1	65	38	15.0	0.9	54	32
	ES2500	42.5	2.6	153	90	36.1	2.2	130	77	29.4	1.8	106	62
	ES2600	84.7	5.1	305	180	72.2	4.3	260	153	58.6	3.5	211	124

For systems using 1 or 2 stage piston/reciprocating compressors multiply compressor flow by 1.4 and select a separator from screw compressor flow rates shown, ensuring due consideration is given to oil type. For sizing at conditions other than those shown, please contact Parker for correct product selection.

ES2000 Series Oil/Water Separators

Performance

Model	Separator Type	Residual Oil in Water Content (Outlet)	Service Period
ES2100 - ES2600	Static	Each separator model is sizeable to deliver a residual oil in water level of: <20mg/L <10mg/L <5mg/L	When oil in water levels exceed allowed levels

Technical Data

Model		ES2100	ES2150	ES2200	ES2300	ES2400	ES2500	ES2600
Inlet Connections		1 x ½" 1 x ¼"	1 x ½" 1 x ¼"	1 x ½" 1 x ¼"	1 x ½" 3 x ¼"	1 x ½" 3 x ¼"	1 x ½" 3 x ¼"	1 x ½" 3 x ¼"
Outlet Hose Connections		19mm (¾")	25mm (1")	19mm (¾")	25mm (1")	25mm (1")	25mm (1")	25mm (1")
Settlement Tank Capacity		N/A	60 litres	75 litres	125 litres	185 litres	355 litres	485 litres
		N/A	16 US G	20 US G	33 US G	49 US G	94 US G	128 US G
Maximum Pressure		16 bar g (232 psi g)						
Minimum/ Maximum Temperature	**°C**	5 to 35	5 to 35	5 to 35	5 to 35	5 to 35	5 to 35	5 to 35
	°F	41 to 95	41 to 95	41 to 95	41 to 95	41 to 95	41 to 95	41 to 95
Material (Recyclable)		Polyethylene						

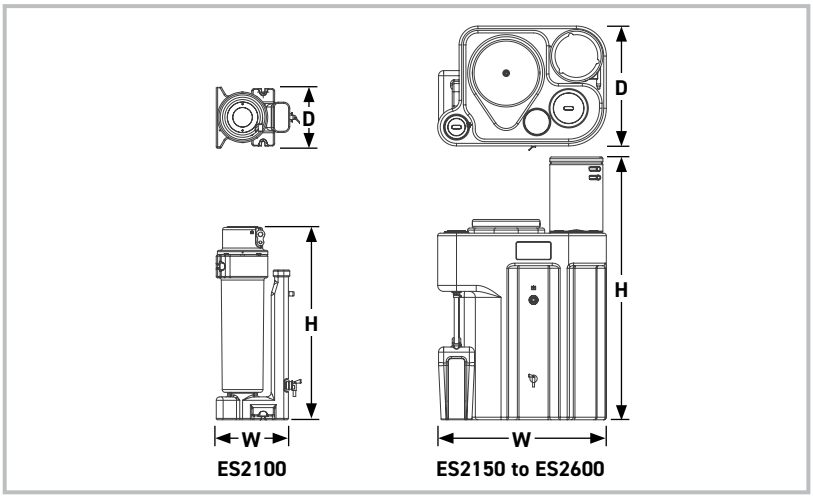

Weight & Dimensions

Model	Height (H)		Width (W)		Depth (D)		Weight			
							Empty		Full	
	mm	ins	mm	ins	mm	ins	kg	lbs	kg	lbs
ES2100	842	33.1	250	9.8	315	12.4	6	13	24.5	154
ES2150	810	31.9	350	13.8	430	16.9	10	22	78.5	173
ES2200	805	31.7	350	13.8	450	17.7	12	26	93.5	206
ES2300	1195	47.0	500	19.7	800	31.5	27	59	159	350
ES2400	1195	47.0	650	26.6	800	31.5	36	79	217	477
ES2500	1535	60.4	700	27.6	985	38.8	70	154	400	880
ES2600	1535	60.4	1000	39.4	1010	39.8	97	214	550	1210

Parker Catalogue Numbers

Model	Part Number
ES2100	ES2100-TI
ES2150	ES2150-TI
ES2200	ES2200-TI
ES2300	ES2300-TI
ES2400	ES2400-TI
ES2500	ES2500-TI
ES2600	ES2600-TI

Maintenance Kits

Model	Quantity Required	Part Number
ES2100-TI	1	ESMK1
ES2150-TI	1	ESMK1
ES2200-TI	1	ESMK1
ES2300-TI	1	ESMK2
ES2400-TI	2	ESMK2
ES2500-TI	1	ESMK3
ES2600-TI	2	ESMK3

Service Kits - Vent Filter

Model	Part Number
ES2100-TI	ESVF1
ES2150-TI	ESVF1
ES2200-TI	ESVF1
ES2300-TI	ESVF2
ES2400-TI	ESVF2
ES2500-TI	ESVF2
ES2600-TI	ESVF2

Industrial Nitrogen Gas Applications

There are thousands of applications for industrial gases. Nitrogen is generally used for three main functions:

- It prevents microbial growth or acts as a filler gas in food applications
- It prevents slow oxidization of products such as chemicals and metals during processing or heating
- It prevents rapid oxidization of products that are flammable or explosive

Pharmaceutical

Whether in primary or secondary pharmaceutical product manufacture or as a centralised QA laboratory supply; within research establishments or universities and colleges, Parker can offer a solution to suit the critical demands of this industry sector.

For blanketing of pharmaceutical product ingredients and pressure transfer within reactor vessels, to micronising powders to prevent oxidisation or explosion, Parker nitrogen generators can cut costs, reduce risk and improve productivity.

Centralised laboratory systems remove the need to have high pressure cylinders within the working environment and the possibility of running out of gas during a QA analysis procedure. Parker nitrogen gas generators are typically used for analytical equipment such as LC/MS, GC, reaction blanketing within fume cupboards, solvent evaporation, ICP, ELSD, NMR and circular dichroism.

Food and Beverage

Most food products start to deteriorate from the moment they are harvested or prepared for packaging, being under attack from a multitude of spoilage mechanisms. By flushing, storing and/or packing with nitrogen, oxygen that many of these micro-organisms need in order to survive and multiply, is removed and the spoilage process is significantly reduced.

Prepared salads and vegetables, fresh chilled ready meals, meat, poultry, fish, dairy produce (including cheese), breads, coffee as well as snack foods such as potato chips and nuts can all benefit from 'modified atmosphere packaging' (or MAP as it is often referred to). By using nitrogen gas from a Parker generator, the product shelf life is increased and the appearance and quite often taste, is also improved.

Nitrogen is also used for 'controlled atmosphere storage' of fresh fruits and vegetables, sparging and blanketing food oils as well as bulk powders, cereals and liquid ingredients.

Alcoholic and non-alcoholic drinks and ingredients can suffer similar spoilage mechanisms to food, however one of the most significant threats to product quality is oxidisation which adversely affects product taste. Beer and wine can absorb unwanted dissolved oxygen throughout the production process. Oxygen can also reduce the effectiveness of natural or added vitamin C which maybe used in fruit juices.

Nitrogen gas generators provide an ideal cost effective solution for all of the processes involved in beverage production.

Lasers

Laser Cutting

By far the largest use of nitrogen gas within this industry sector is for laser cutting. Nitrogen gas is used as an 'assist gas' to prevent oxidisation or discolouration and to blow away the molten material from the cut edge.

It is also used in certain types of laser cutting machine as a 'purge gas' to ensure the laser beam guide path from the resonator (where the beam is generated), to the cutting head, is free of contamination that could otherwise affect the power or alter the shape of the beam.

Laser Sintering

Laser sintering or rapid prototyping uses a laser to form a solid 3D structure within a plastic powder material. Complex shapes and patterns can be constructed and modelled with ease. Nitrogen is used to blanket and prevent oxidisation of the powder material while it melts and solidifies to shape under the heat generated by the laser beam.

Laser Ablation

Nitrogen is used to expel fumes and blanket delicate electronic circuits where a laser beam is used to erode pathways on micro printed circuit boards.

Laser Eye Surgery

Nitrogen is used as a beam purge and pneumatics gas on Eximer laser machines which are used in the corrective treatment of eyesight defects.

Heat Treatment

Nitrogen gas is commonly used to exclude oxygen from heat treatment furnaces and ovens. Parker can supply nitrogen gas generation systems to replace expensive bulk vessel liquid supplies for many heat treatment processes.

Typical applications include:

- Belt furnaces
- Batch furnaces
- Vacuum ovens
- Brazing
- Carburising
- Tempering
- Annealing
- Gas quenching
- Neutral hardening
- Normalising
- Sintering

Fire Prevention and Archive Protection

From the preservation of treasures for the generations after us, to preventing essential data destruction due to fire, Parker nitrogen generators provide a unique solution.

Oxygen depleted air can be pumped into buildings that house treasures and archives or computer stored data to help prevent total loss caused by fire. Museum pieces, paintings, artefacts, furniture and valuable fabrics can all be protected.

In general, only a modest reduction in normal ambient oxygen levels is enough to prevent fire. At 16% oxygen content, archives are protected whilst intermittent human exposure to these levels will have no adverse effects.

What Nitrogen Quality Do I Need?

Traditional gas companies generally provide gas that is of high purity regardless of whether the application or process needs it. This is as a result of the ASU manufacturing process. Typically cylinder and liquid nitrogen has a maximum remaining oxygen content of between 5ppm to 20ppm v/v.

The majority of applications do not need such high purity gas and the benefit of using a higher oxygen content Parker generated gas is that less energy is used to produce it, so the unit gas cost will be more competitive.

For example using nitrogen with a maximum remaining oxygen content of 5% uses 5 times less energy to generate than with a maximum remaining oxygen content of 10ppm.

Providing customers with ultra-high purity nitrogen in all instances is an unnecessary waste of money and energy.

What do we mean by 'purity'?

By purity Parker means the maximum remaining oxygen content in the output nitrogen gas. Parker nitrogen technology when combined with Parker compressed air pre-treatment, guarantees the nitrogen gas to be commercially sterile, oil-free, dry and particulate free. (Within the specifications defined in the product information data contained in this catalogue.)

The maximum remaining oxygen content required will vary with every application.
Maximum cost and energy savings = maximum oxygen level permissible

High Purity
10 ppm to 1000ppm (99.999% to 99.9%)

Laser cutting
50ppm to 500ppm

Heat treatment
10ppm to 1000ppm

Electronics soldering
50ppm to 500ppm

Pharmaceutical
10ppm to 5000ppm

Mid Purity
0.1% to 1% (99.9% to 99%)

Food MAP
0.1% to 1%

Food processing
0.1% to 1%

Beer dispense
0.5%

Wine blanketing
0.5%

Oil sparging
0.5%

Brazing
0.5%

Injection molding
0.5% to 1%

Wire annealing
0.5%

Aluminium sparging
0.5%

Low Purity
1% to 5% (99% to 95%)

Fire prevention
5%

Explosion prevention
2% to 5%

Pressure testing
5%

Gas seal blanketing
5%

Chemical blanketing
1% to 5%

Pigging
5%

Autoclaves
5%

Laser sintering
2%

Dry boxes
2%

Typical PSA Installations

Layout for standard industrial applications

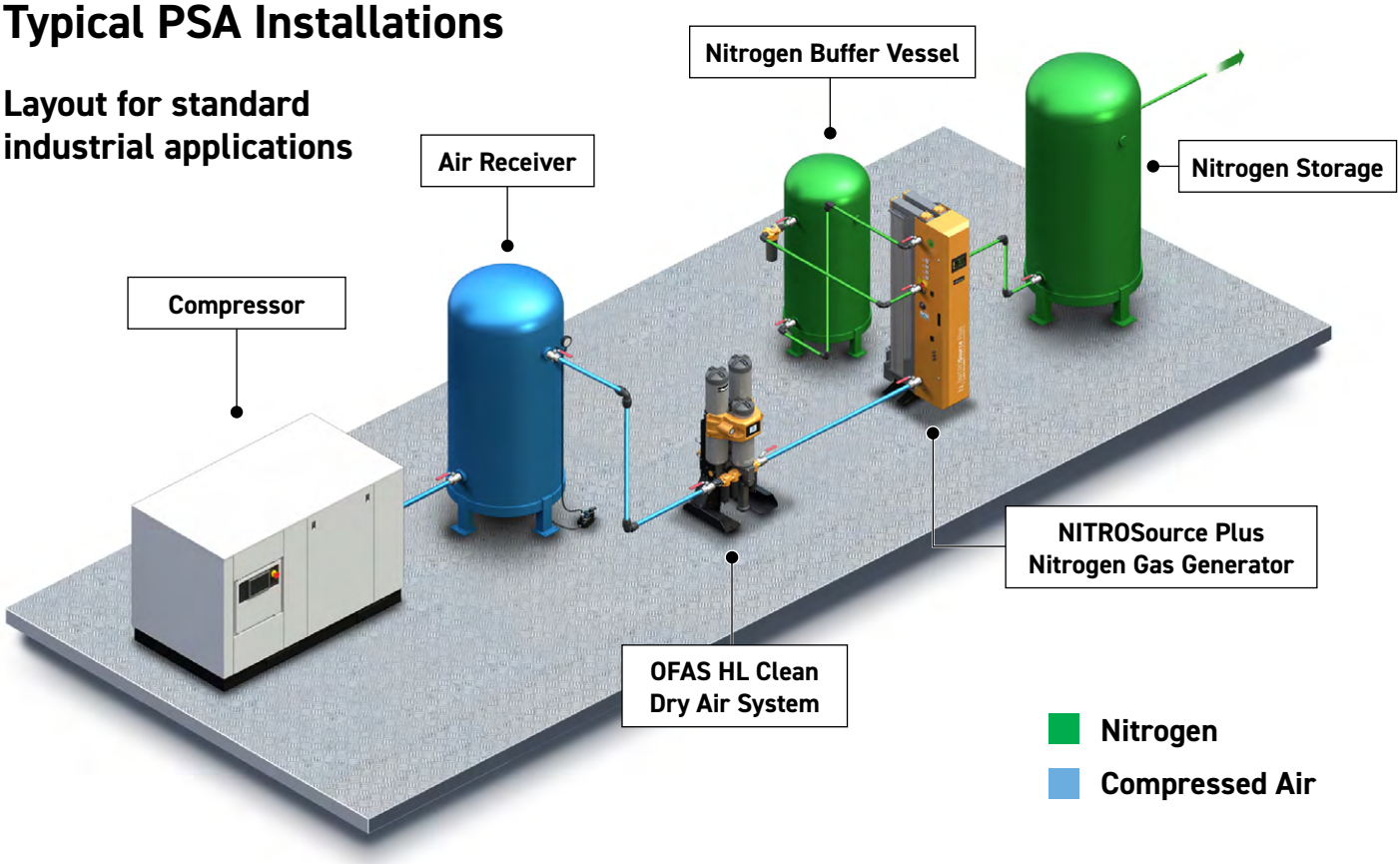

Nitrogen Gas Generation - Typical PSA Installations

Layout for standard industrial applications

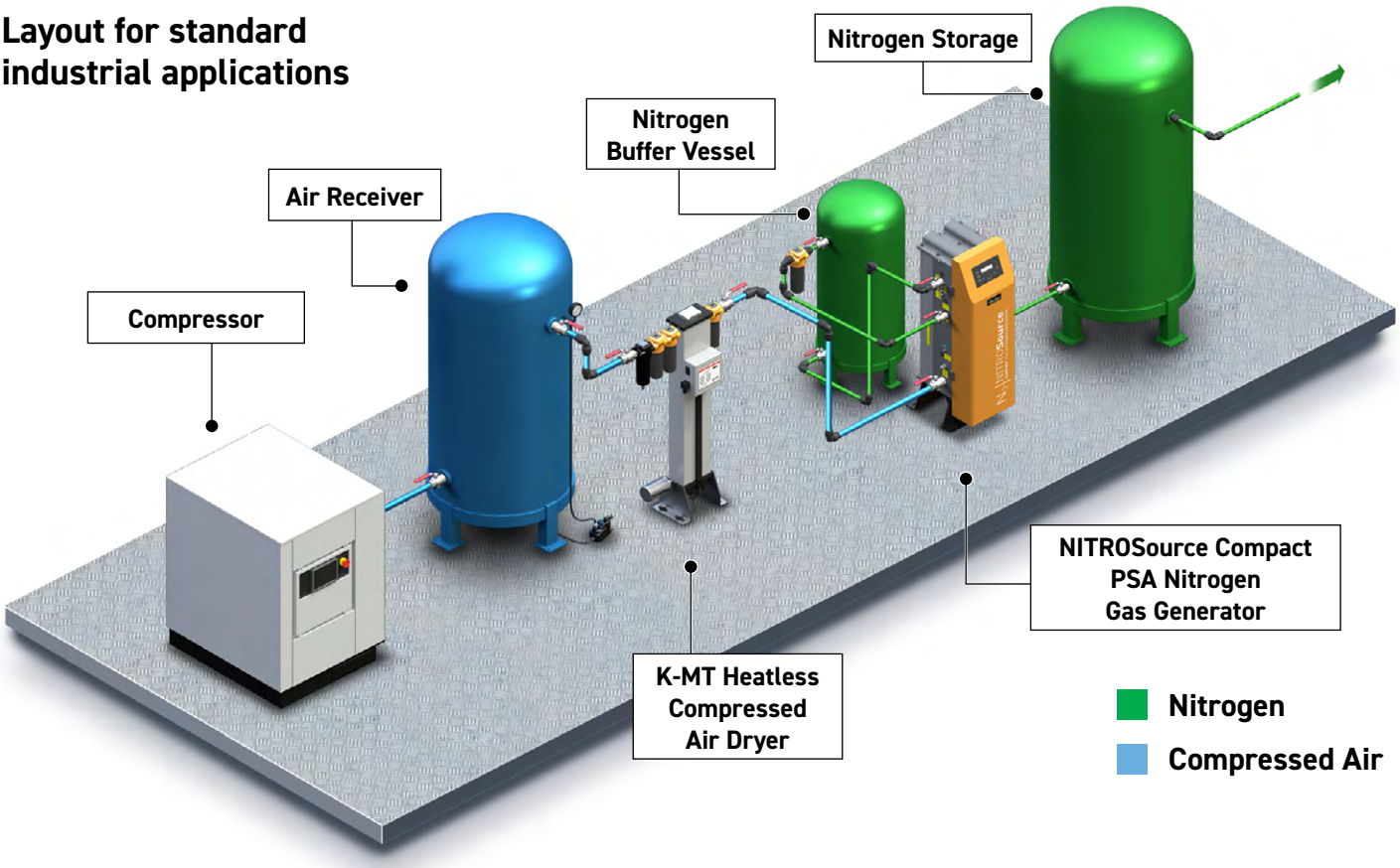

Layout for food and pharmaceutical applications with sterile gas filtration

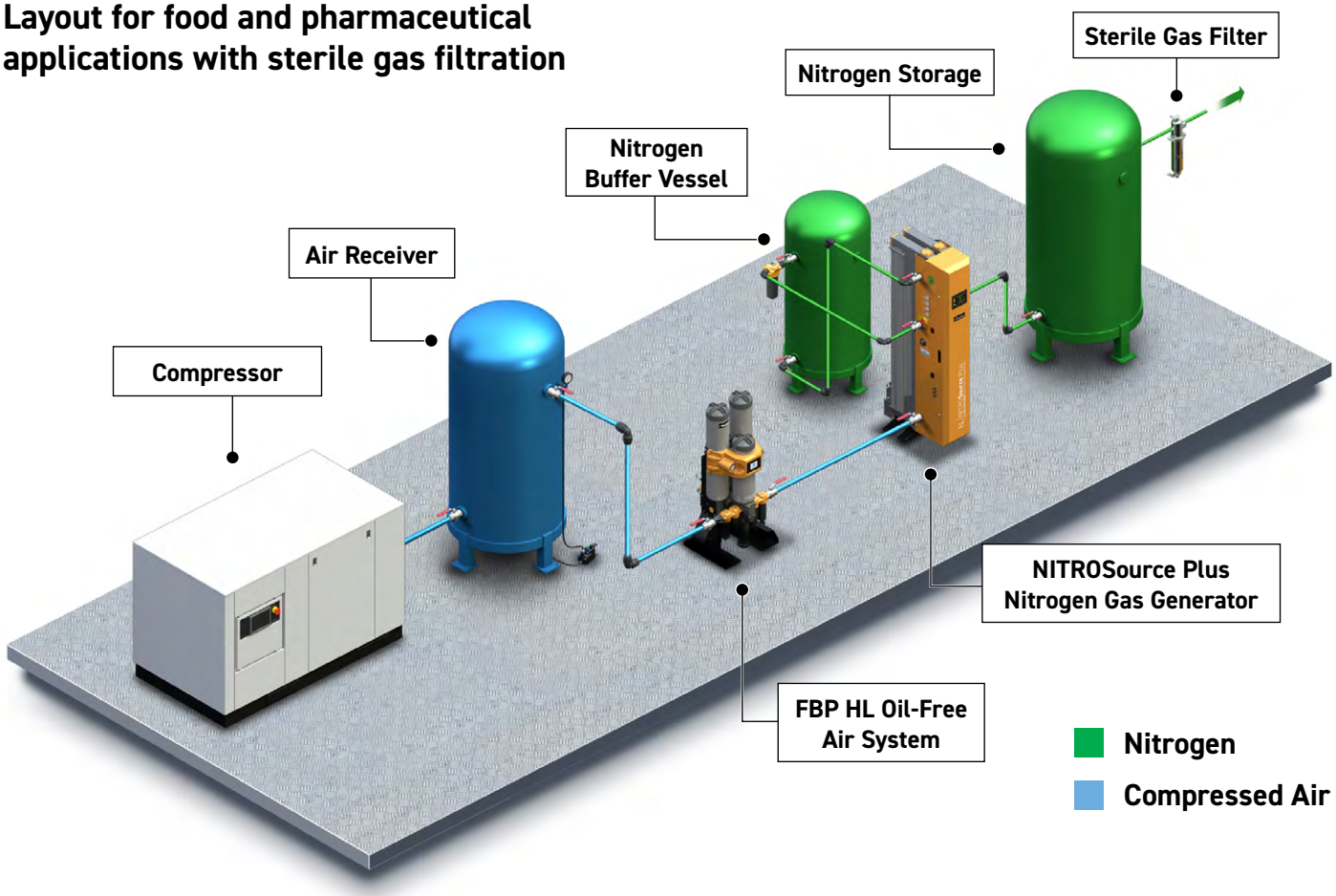

Layout for intermediate pressure 40 barg applications

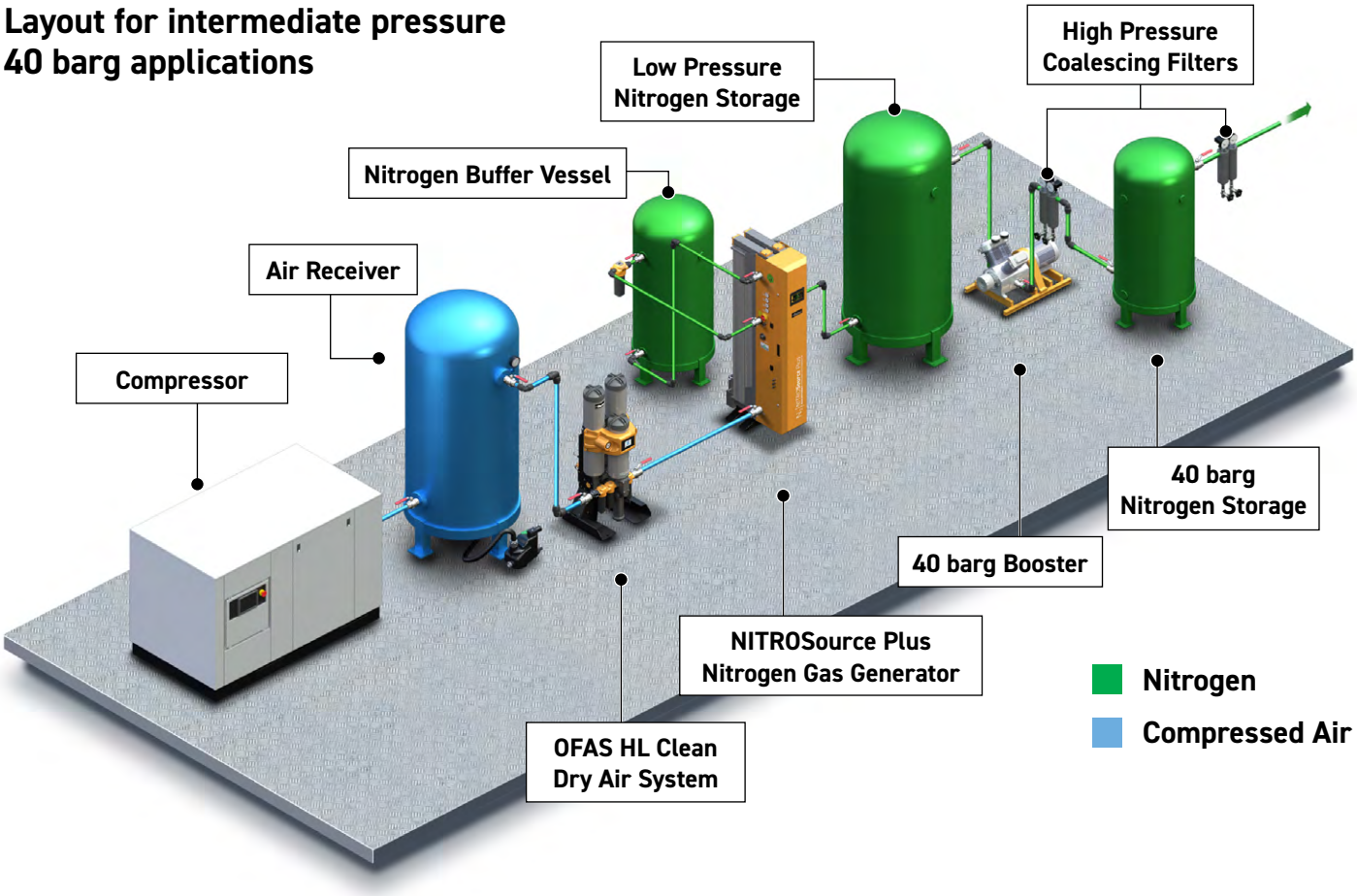

Layout for high pressure 350 barg applications

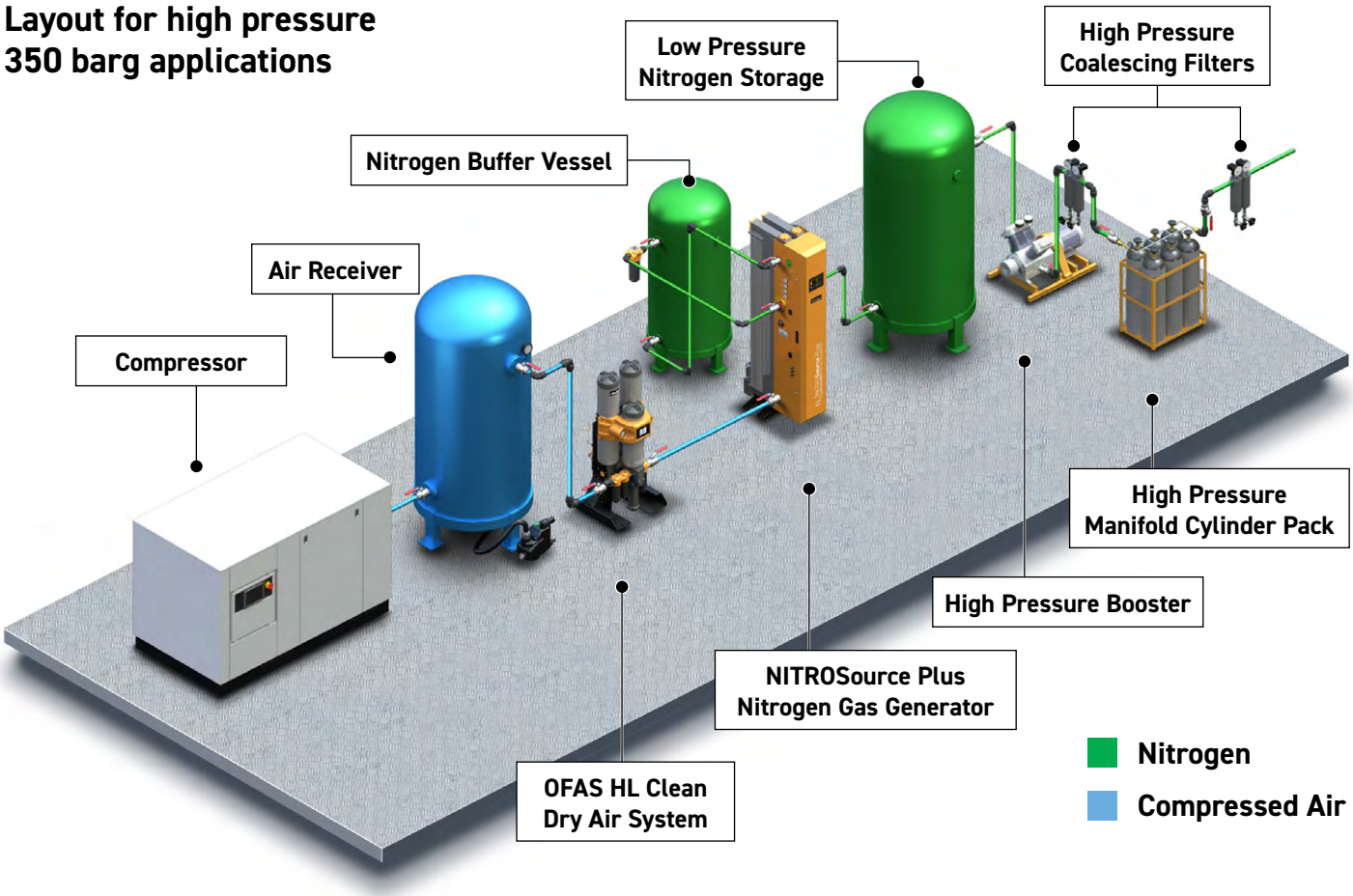

Nitrogen Gas Generation - Typical Multi-bank Installations

Unlike traditional designs, NITROSource Plus models can be multi-banked to provide extra nitrogen capacity should demand increase in the future. There is no need to replace the generator with a larger unit, additional capacity can be covered by simply adding extra bank(s).

2 x NITROSource Plus with individual compressed air treatment (2 x OFAS)

OFAS required for ambient conditions >35°C

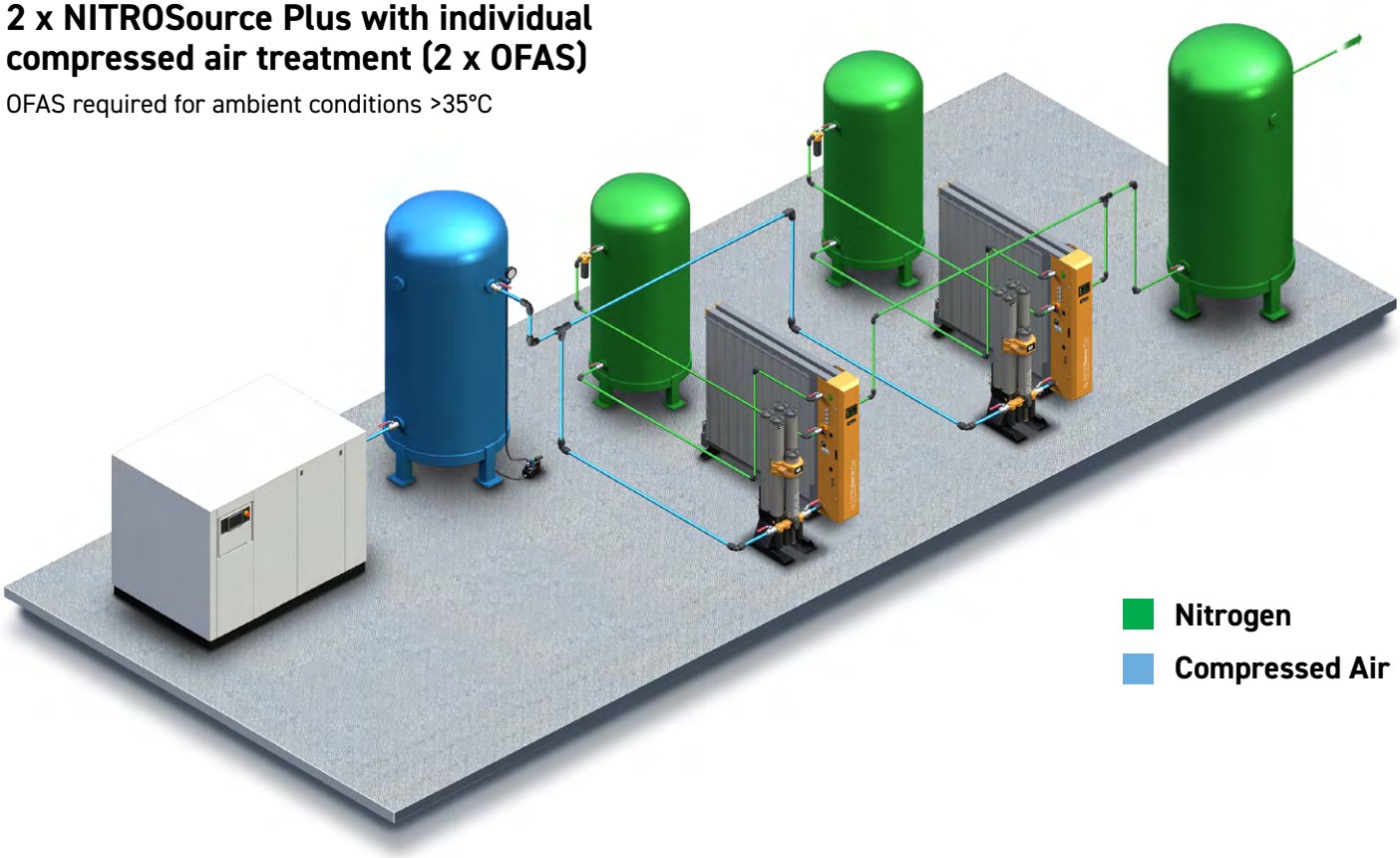

4 x NITROSource Plus with individual compressed air treatment (4 x OFAS)

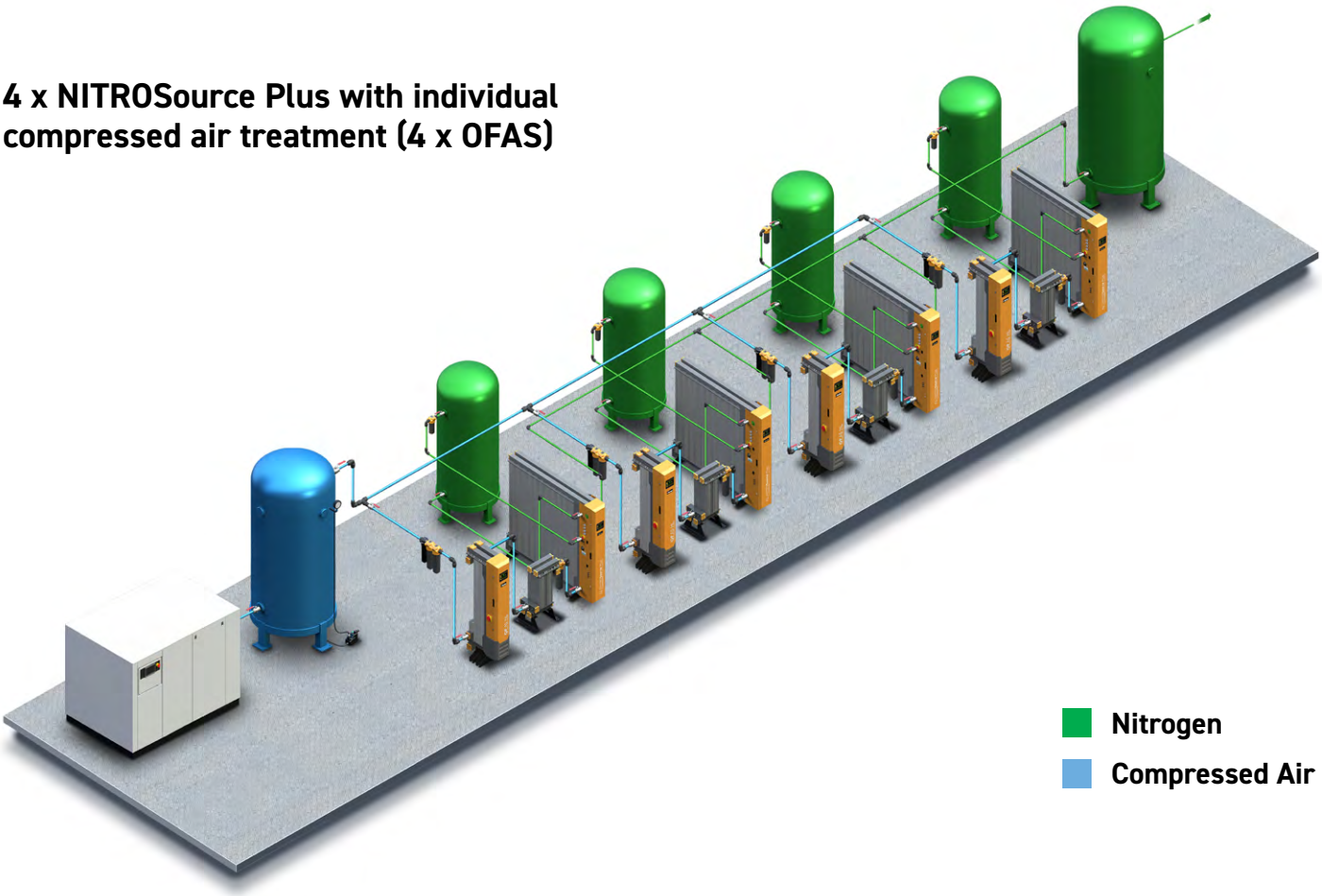

4 x NITROSource Plus with joint compressed air treatment (1 x PSE and 1 x OVR)

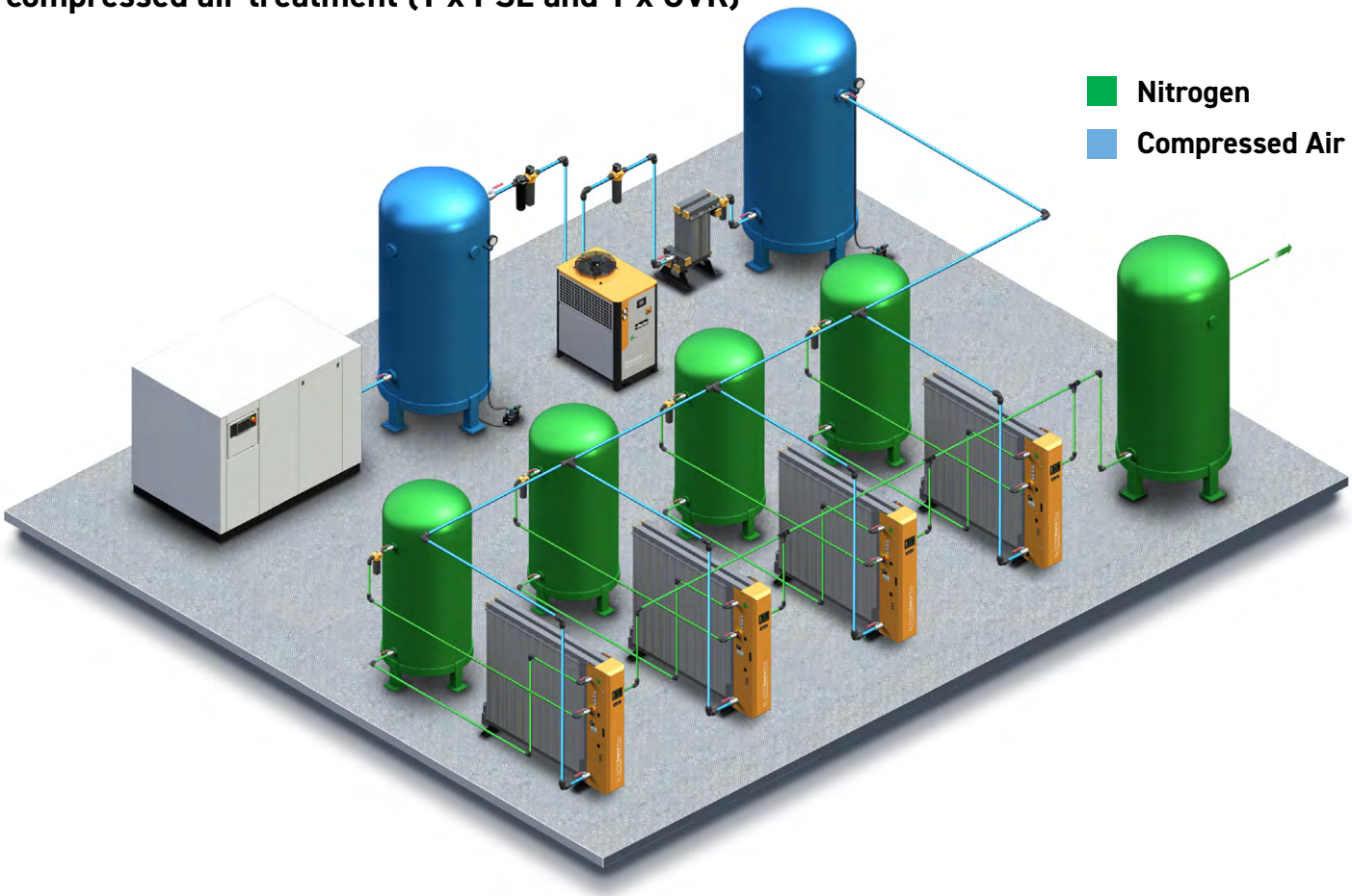

5 x NITROSource Plus with joint compressed air treatment (1 x OFAS HL)

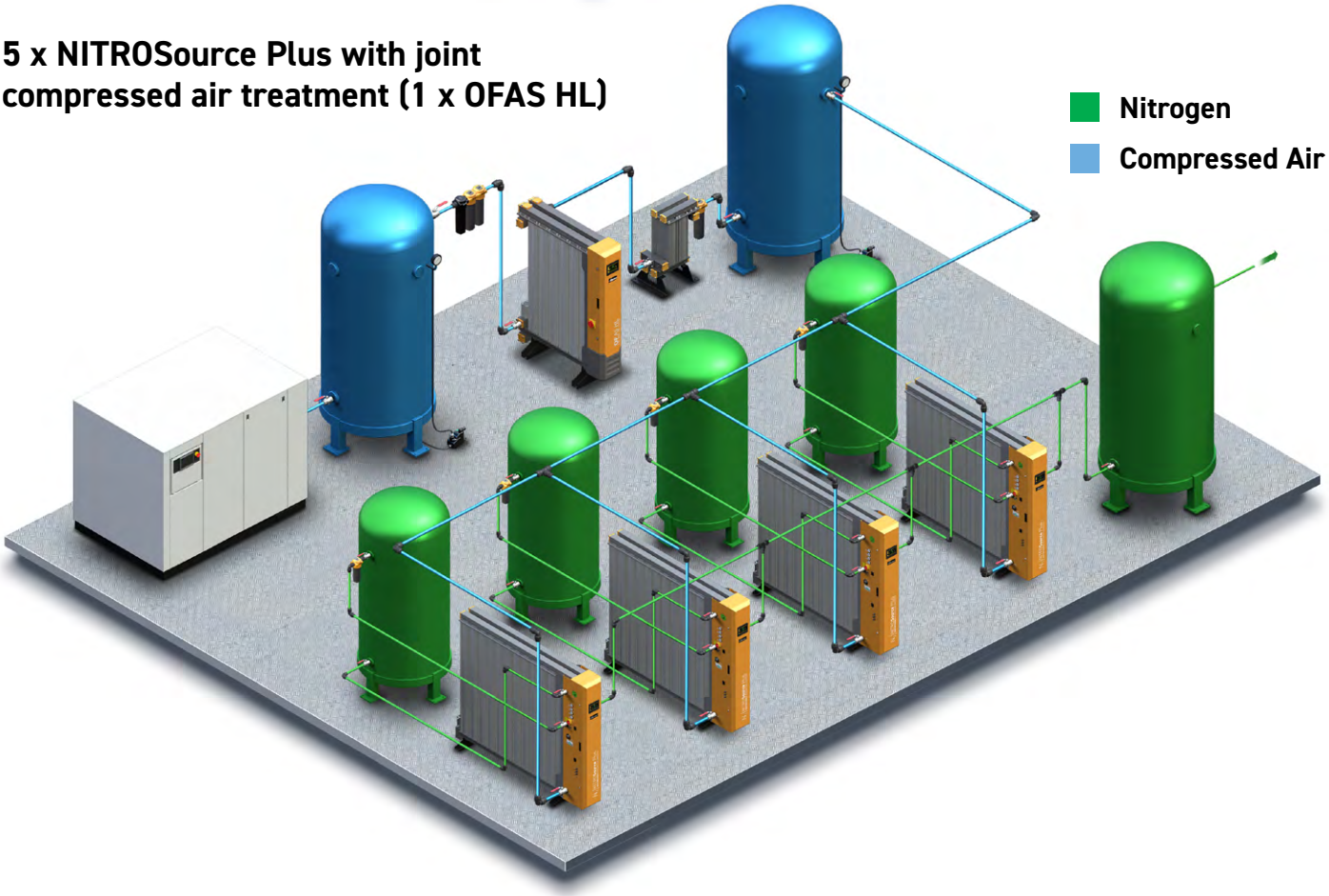

NITROSource Compact PSA Nitrogen Gas Generator

Please contact Parker for full NITROSource Compact performance data.

Nitrogen Outlet Flow Rates

Stated flows are for operation at 7 bar g (100 psi g / 0.7 MPa g) with reference to 25 °C

Model	Purity (Remaining Oxygen Content) vs Nitrogen Outlet Flow Rate (m^3/hr)											
	10ppm	50ppm	100ppm	250ppm	500ppm	0.1%	0.5%	1.0%	2.0%	3.0%	4.0%	5.0%
N2C-02	0.8	1.2	1.5	1.8	2.1	2.5	3.7	4.4	6.1	7.7	9.1	10.3
N2C-04	1.7	2.4	2.9	3.5	4.2	5.0	7.6	9.1	13.0	15.9	18.4	20.6
N2C-06	2.4	3.9	4.5	5.7	6.5	7.6	11.1	13.3	18.6	22.7	26.1	29.0
N2C-08	3.4	5.0	5.9	7.4	8.7	10.2	14.9	18.0	24.0	29.3	33.9	37.8
N2C-10	4.2	6.2	7.3	9.1	10.8	12.8	18.6	22.5	30.0	36.6	42.4	47.2

Part Number Configurator

Configurator	N	2	C	-	□	□	-	□	□	-	0	0	A

Model	Prefix
N2C-02	0 2
N2C-04	0 4
N2C-06	0 6
N2C-08	0 8
N2C-10	1 0

Purity	Prefix
10ppm / 50ppm	U
100ppm / 250ppm / 500ppm / 0.1%	H
0.5% / 1.0% / 2.0% / 3.0% / 4.0% / 5.0%	L

Oxygen Analyser Technology	Prefix
Electrochemical (10ppm / 50ppm)	E
Zirconia (100ppm / 250ppm / 500ppm / 0.1% / 0.5% / 1.0% / 2.0% / 3.0% / 4.0% / 5.0%)	Z

Minimum Buffer Vessel Size

Outlet Flow Rate m^3/hr	Capacity	
⩽3.0	50 Litres	13 Gallon
3.1- 7.5	150 Litres	39 Gallon
7.6 - 12.3	250 Litres	66 Gallon
12.4 - 24.0	500 Litres	132 Gallon
24.1 - 45.0	750 Litres	198 Gallon
>45.0	1000 Litres	264 Gallon

Recommended minimum buffer vessel size to guarantee maximum outlet pressure.

Utilisation of smaller buffer vessels may result in lower outlet pressures and fluctuations in purity.

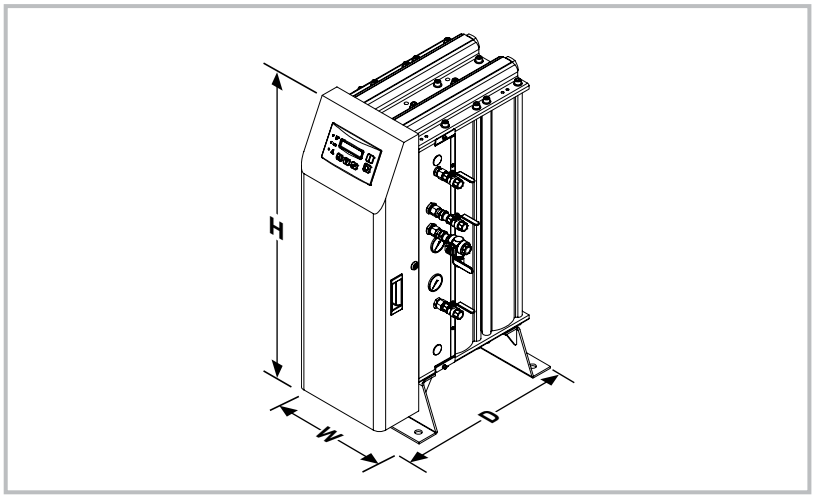

Weights & Dimensions

Model	Height (H)		Width (W)		Depth (D)		Weight	
	mm	ins	mm	ins	mm	ins	kg	lbs
N2C-02	1040	40.9	450	17.7	458	18.0	136	299.8
N2C-04	1040	40.9	450	17.7	628	24.7	188	414.4
N2C-06	1040	40.9	450	17.7	796	31.3	246	542.3
N2C-08	1040	40.9	450	17.7	965	37.9	303	667.9
N2C-10	1040	40.9	450	17.7	1134	44.6	360	793.6

Pipe Connection Sizes

Compressed Air Inlet	To Buffer Vessel	From Buffer Vessel	Nitrogen Outlet
½" BSPP	½" BSPP	½" BSPP	½" BSPP
½" BSPP	½" BSPP	½" BSPP	½" BSPP
½" BSPP	½" BSPP	½" BSPP	½" BSPP
½" BSPP	½" BSPP	½" BSPP	½" BSPP
½" BSPP	½" BSPP	½" BSPP	½" BSPP

Operation Parameters

Minimum Inlet Air Quality	Minimum Operating Pressure		Maximum Operating Pressure		Design Pressure		Minimum Operating Temperature		Maximum Operating Temperature		Recommended Operating Temperature		Supply Voltage	IP Rating	Average Noise @ 7.0 bar(g)
	bar g	psi g	bar g	psi g	bar g	psi g	°C	°F	°C	°F	°C	°F			dB(A)
ISO 8573-1: 2010 Class 2.4.1	6.0	87.0	10.0	145.0	10.0	145.0	5.0	41.0	50.0	122.0	20.0	68.0	100-240V AC (±10%) 50/60Hz	IP20 NEMA 1	~80

Preventative Maintenance Kits

Service Interval	Model	Part Number	Contents
12 Months	All	M12.N2C.0001	MIST-X 150 Silencer, P010AO Element.
24 Months	All ppm Models	M24.PPM.0002	O_2 Cell PPM
	All % Models	M24.PCT.0002	O_2 Cell %
	All Models with Analyser	M24.N2C.0001	Air Inlet Valves (x2), Exhaust Valves (x2), Outlet Valves (x2).
	All Models without Analyser	M24.N2C.0002	Air Inlet Valves (x2), Exhaust Valves (x2), Outlet Valve.

NITROSource Plus PSA Nitrogen Gas Generator

Please contact Parker for full NITROSource Plus performance data.

Nitrogen Outlet Flow Rates

Model	Purity (Remaining Oxygen Content) vs Nitrogen Outlet Flow (m^3/hr)*										
	5ppm	10ppm	50ppm	100ppm	250ppm	500ppm	0.1%	0.5%	1.0%	2.0%	3.0%
NSP-020	7.0	8.0	10.1	11.4	13.4	15.1	17.0	23.2	27.3	32.8	37.5
NSP-030	9.4	10.8	14.6	16.6	19.7	23.1	25.8	34.7	40.9	48.7	55.1
NSP-040	12.5	14.4	19.4	22.1	26.2	30.8	34.4	46.3	54.6	64.9	73.4
NSP-050	15.6	18.0	24.3	27.7	32.8	38.5	43.0	57.9	68.2	81.1	91.8
NSP-060	18.8	21.5	28.6	32.5	38.9	44.3	50.0	68.1	80.2	95.4	110.1
NSP-070	21.9	25.1	33.3	38.0	45.4	51.7	58.3	79.4	93.6	111.3	128.5
NSP-080	25.0	28.7	38.1	43.4	51.9	59.1	66.7	90.8	106.9	127.2	146.8
NSP-090	28.1	32.3	42.8	48.8	58.4	66.4	75.0	102.1	120.3	143.1	165.2
NSP-100	34.3	39.1	52.0	56.8	66.1	74.1	83.8	114.8	134.7	164.5	178.7
NSP-110	37.7	43.0	57.2	62.5	72.7	81.5	92.2	126.3	148.2	180.9	196.2
NSP-120	41.2	46.9	62.4	68.2	79.3	88.9	100.6	137.8	161.6	197.3	-

Performance data is based on 7.0 bar(g) (101.5 psi(g)) inlet and 20°C (68°F) ambient temperature.
*m^3 reference to standard conditions, 20°C, 1013 mbar(a) and 0% relative water vapour pressure.

Part Number Breakdown

Configurator	N	S	P	-	□	□	□	-	□	□	□	□	□	-	0	0	A

Model	Prefix
NSP-020	0 2 0
NSP-030	0 3 0
NSP-040	0 4 0
NSP-050	0 5 0
NSP-060	0 6 0
NSP-070	0 7 0
NSP-080	0 8 0
NSP-090	0 9 0
NSP-100	1 0 0
NSP-110	1 1 0
NSP-120	1 2 0

Purity	Prefix
5ppm / 10ppm / 50ppm	U
100ppm / 250ppm / 500ppm / 0.1%	H
0.5% / 1.0% / 2.0% / 3.0%	L

Dew point Monitoring	Prefix
Not Fitted	N
Inlet PDP Monitoring	I
Outlet PDP Monitoring	O
Both Inlet & Outlet Monitoring	B

Nitrogen Outlet Flow Range [1]	Prefix
High Flow	H
Low Flow	L

Energy Saving Technology [2]	Prefix
Not Fitted	N
Fitted	Y

Oxygen Analyser Technology	Prefix
Electrochemical	E
Zirconia	Z

[1] See 'Mass Flow Controller Flow Breaks' chart for sizing information.
[2] Energy Saving Technology not available on 50ppm, 10ppm or 5ppm generators.

Mass Flow Controller Flow Breaks

Outlet Pressure	bar(g)	5	6	7	8	9	10	11	12	13
	psi(g)	72.5	87	101.5	116	130.5	145	159.5	174	188.5
High Flow	m^3/hr*	190.0	205.0	219.0	232.0	245.0	257.0	268.0	279.0	290.0
Low Flow		61.0	66.0	70.0	74.0	78.0	82.0	86.0	89.0	93.0

*m^3 reference to standard conditions, 20°C, 1013 mbar(a) and 0% relative water vapour pressure.

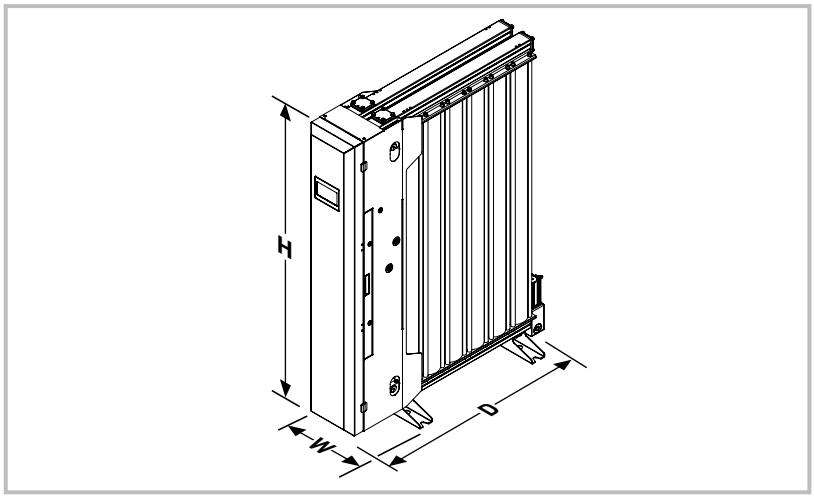

Weights & Dimensions

Model	Height (H)		Width (W)		Depth (D)		Weight	
	mm	ins	mm	ins	mm	ins	kg	lbs
NSP-020	2063	81.22	550	21.65	883	34.7	335	739
NSP-030	2063	81.22	550	21.65	1052	41.4	429	946
NSP-040	2063	81.22	550	21.65	1221	48.1	522	1151
NSP-050	2063	81.22	550	21.65	1390	54.7	615	1356
NSP-060	2063	81.22	550	21.65	1559	61.3	710	1565
NSP-070	2063	81.22	550	21.65	1728	68.0	805	1775
NSP-080	2063	81.22	550	21.65	1897	74.6	897	1978
NSP-090	2063	81.22	550	21.65	2028	79.8	988	2178
NSP-100	2063	81.22	550	21.65	2194	86.3	1104	2434
NSP-110	2063	81.22	550	21.65	2360	92.9	1197	2639
NSP-120	2063	81.22	550	21.65	2526	99.4	1292	2848

Pipe Connections & Buffer Vessel Sizes

Compressed Air Inlet	To Buffer Vessel	From Buffer Vessel	Nitrogen Outlet	Minimum Capacity*	
				Litres	Gallons
1" BSPP	1" BSPP	1" BSPP	1" BSPP	270	71
1" BSPP	1" BSPP	1" BSPP	1" BSPP	500	132
1" BSPP	1" BSPP	1" BSPP	1" BSPP	500	132
1" BSPP	1" BSPP	1" BSPP	1" BSPP	1000	264
1" BSPP	1" BSPP	1" BSPP	1" BSPP	1000	264
1" BSPP	1" BSPP	1" BSPP	1" BSPP	1000	264
1" BSPP	1" BSPP	1" BSPP	1" BSPP	1500	396
1" BSPP	1" BSPP	1" BSPP	1" BSPP	1500	396
1½" BSPP	1½" BSPP	1" BSPP	1" BSPP	1500	396
1½" BSPP	1½" BSPP	1" BSPP	1" BSPP	1500	396
1½" BSPP	1½" BSPP	1" BSPP	1" BSPP	2000	528

***Important Note:** Recommended minimum buffer vessel size to guarantee maximum outlet pressure. Utilisation of smaller buffer vessels may result in lower outlet pressures and fluctuations in purity.

Operation Parameters

Minimum Inlet Air Quality	Minimum Operating Pressure		Maximum Operating Pressure		Design Pressure		Minimum Operating Temperature		Maximum Operating Temperature		Recommended Operating Temperature		Supply Voltage	IP Rating	Average Noise @ 7.0 bar(g)
	bar g	psi g	bar g	psi g	bar g	psi g	°C	°F	°C	°F	°C	°F			dB(A)
ISO 8573-1: 2010 Class 2.4.1	5.0	72.5	13.0	188.5	15.0	217.5	5.0	41.0	50.0	122.0	20.0	68.0	100-240V AC (±10%) 50/60Hz	IP20 NEMA 1	<75

Preventative Maintenance Kits

Service Interval	Model	Part Number	Contents
12 Months	NSP-020 to 120	M12.PDP.0001	Inlet or Outlet Dewpoint Sensor Replacement
	NSP-020 to 090	M12.EXH.0001	Silencer Element & Filter Element Replacement
		M12.EXH.EST.0001	Silencer Element, Filter Element & EST Filter Replacement
	NSP-100 to 120	M12.EXH.0002	Silencer Element & Filter Element Replacement
		M12.EXH.EST.0002	Silencer Element, Filter Element & EST Filter Replacement
24 Months	NSP-020 to 120	M24.EPPM.0001	Electrochemical PPM Cell Replacement
60 Months	NSP-020 to 120	M60.ZPPM.0001	Mini-Zirconia PPM Oxygen Analyser Replacement
		M60.ZPCT.0001	Mini-Zirconia Percentage Oxygen Analyser Replacement
	NSP-020 to 090	M60.VOH.0001	Pilot & Control Valve Overhaul
		M60.VOH.EST.0001	Pilot, Control and EST Valve Overhaul
	NSP-100 to 120	M60.VOH.0002	Pilot & Control Valve Overhaul
		M60.VOH.EST.0002	Pilot, Control and EST Valve Overhaul

Technical Gas Filtration

The inclusion within a gas process stream of a filter is essential with most applications, this is true for both inert and flammable gas types.

The filter type chosen will bear a relationship to the application requirements, the gas type properties being filtered and the operating specifications of the process. Typically, in gas stream applications we see the requirement to remove particulate and condensate carry-over. Failure to remove or reduce contamination will cause many problems within the process.

Filtration is a vital part of gas processing, removing harmful liquid and solid contaminants, improving product quality and protecting downstream equipment from damage. Fundamentally, filters are employed to remove contaminants from gas streams at various points within an industrial process. These contaminants may be solid particulates or undesirable fluids in liquid aerosol or vapour form.

It is important fact that at some point the gas will require treatment. This may be during initial gas production, during transportation, post storage, treatment or process production delivery.

The Parker Technical Gas filtration range is designed to remove impurities and contaminants from gases, ensuring that the gas quality meets the required standards of the application. Ensuring safety to the operator and the process, the Parker filter typically provides protection to the process by the removal of unwanted impurities within the gas stream and is essential to achieve the desired product quality and the reduction of downtime and general operational costs.

A brief overview on examples of individual gas types found within common industrial sectors are detailed here.

Argon (Ar)

Argon is often used when an inert atmosphere is needed. Used by welders to protect the weld area and in the casting industries, especially in the making of specialty alloys and manufacturing titanium. With its unique properties and characteristics, Argon gas has become an important industrial gas used in many areas of science and technology.

Inert Properties: Argon is a colourless, odourless, and non-reactive noble gas, making this gas ideal for applications requiring a stable environment.

Industrial Applications: Essential in metal fabrication, electronics manufacturing, and lighting, particularly in creating a protective atmosphere.

Medical and Scientific Uses: Used in cryosurgery, medical lasers, and as a carrier gas in gas chromatography.

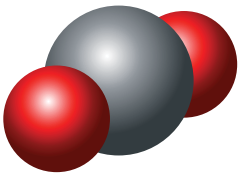

Carbon Dioxide (CO_2)

Industrial carbon dioxide is an incombustible gas that's collected as a byproduct of industrial processes. Typically, CO_2 provided into the industry supply chain commercially as a gas is recovered and purified from industrial plants, usually as the result of large-scale chemical production. A growing landscape of CO_2 recovery processes also sees a widening scope to offer filtration and purification solutions. Carbon dioxide is an extremely versatile gas resulting in a huge range of industrial applications.

Inert Properties: Carbon dioxide is an inert gas, but it is not made of a single element like the noble gases. Rather, carbon dioxide is a compound consisting of carbon and oxygen. It is a colourless and odourless gas. It is a non-flammable gas and slightly toxic.

Industrial Applications: Its physical and chemical properties, and its ability to be processed into a liquid, gas or solid, make it ideal for a variety of diverse industrial applications. The process of converting liquid CO2 to a gaseous state may result in potential contamination requiring purification.

Food and Beverage Uses: Carbonation of soft drinks, tapping of draft beer. Modified atmosphere packaging. Food cryogenics: cooling and freezing of certain foods. Transport under controlled temperature.

Helium (He)

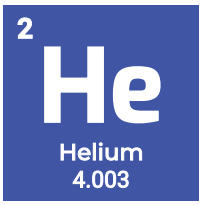

Helium is a rare gas and is highly valued in the general gas market. Present in a natural gas steam, Helium recovery and the purification of the raw Helium is essential for specialist industrial use. Helium is heavily involved in the semiconductor manufacturing process. The element is used as a leak conductor, cooling agent, diluent gas in plasma etching, and carrier gas for deposition.

Inert Properties: Helium is a colourless, odourless, insipid and non-toxic gas. It's less soluble in water than any other gas. It's the less reactive element and doesn't essentially form chemical compounds. The density and viscosity of helium vapour are very low.

Industrial Applications: Helium is heavily involved in the semiconductor manufacturing process. Helium gas is used as a leak conductor, cooling agent, diluent gas in plasma etching, and carrier gas for deposition.

Semiconductor Manufacturing Uses: Helium is essential in various stages of semiconductor manufacturing, primarily because of its high thermal conductivity and inert characteristics. Its ability to rapidly cool down chips during the production process makes it irreplaceable, particularly as semiconductor nodes become smaller and more efficient.

Neon (Ne)

Ne
Neon
20.180

Industrial lasers are powered by neon gas, these have emerged as pivotal tools in modern manufacturing, enabling intricate processes that surpass traditional machining methods and making them indispensable in various industrial applications. These applications include laser marking, surface texturing, laser cutting, welding, ablation, drilling.

Some examples of markets, industries and applications are provided below.

Inert Properties: It is a colourless, tasteless odourless inert gas. Neon is the second-lightest noble gas, its colour is reddish orange in a vacuum discharge tube and in neon lamps. It is chemically inactive. Neon is a rare gas so it's expensive to produce.

Industrial Applications: Neon gas is used to make high-voltage indicators and switching gear, lightning arresters, diving equipment and lasers

Semiconductor Manufacturing Uses: Neon gas plays a critical role in photolithography, a key step in semiconductor manufacturing. It is used to create intricate patterns on silicon wafers, which are essential for producing microchips used in electronic devices.

7
N
Nitrogen
14.007

Nitrogen (N_2)

Nitrogen gas sees many uses in a wide landscape of applications. In the Food & Beverage industries it is common practice for food processing companies to use compressed nitrogen to displace oxygen in the packaging of perishable foods. By removing the oxygen, the shelf life of foods such as meats, fruits, vegetables, and various snack foods can be extended. Nitrogen gas is also used to displace oxygen and prevent explosions in highly dangerous atmospheres, such as chemical plants and manufacturing facilities. The inert composition of this gas prevents the risk of explosions and offers safe storage and transportation. Nitrogen is also important to the chemical industry. It is used in production of fertilisers, nitric acid, nylon, dyes and explosives.

Inert Properties: It is a colourless, odourless, tasteless gas that is the most plentiful element in Earth's atmosphere and is a constituent of all living matter. It is non-combustible and non-toxic.

Industrial Applications: While the main industrial use of nitrogen is to create ammonia that is required for fertilizer, explosives, and other materials, there are many diverse applications for Nitrogen gas. These include food packaging, fuel blanketing and purging in manufacturing and handling of chemicals. Nitrogen gas can be found in more places and used for more purposes than you may have realized.

Modified Atmosphere Packaging: It is common practice for food processing companies to use compressed nitrogen to displace oxygen in the packaging of perishable foods. Without oxygen, the shelf life of foods such as meats, fruits, vegetables, and various snack foods can be extended. MAP is an established technology proven to significantly slow the process of decay and extend the shelf life of packaged foods.

Xenon (Xe)

54
Xe
Xenon
131.294

Xenon gas is used in various industries, including medical, aerospace, lighting, semiconductor manufacturing, laser technology, and research and development. Its unique properties make it valuable for numerous specialized applications.

Inert Properties: More than 4.5 times heavier than air, xenon is colourless, odourless, and tasteless. Xeon is a rare and one of the safest gases to handle as it is a chemically unreactive gas.

Industrial Applications: The Xenon Gas Market is undergoing a period of significant transformation, propelled by technological advancements and its increasing applications in diverse sectors such as medical imaging, lighting, and aerospace.

Semiconductor Manufacturing Uses: Xenon is essential in semiconductor manufacturing, particularly for excimer laser annealing. Producing the ultraviolet (UV) light required to achieve the precise electrical properties needed in transistors and other semiconductor devices.

TGS and TGE Series

Filtration Perfomance

Product Series	Filter Grade	Filtration Efficiency	Description	Temperature Range
TGS	S	95 % (⩾1 µm)	Strainer filter	1 - 120°C
	P	99,99 % (3 µm)	Coarse filter	1 - 60°C
	PL12	>99 % (12/25 µm)		1 - 120°C
	PL25			
	PL12-HTCR	>99 % (12/25 µm)		
	PL25-HTCR			
	EPL01	>99 % (1 µm)		
	C	99,9999 % (1µm)	Fine filter	1 - 80°C
	CF	99,99999 % (0,01µm)	Ultra-fine filter	
	CSF	⩾99,99999 % (0,01µm)	Super-ultra-fine filter	
TGE	C	99.9999% (1 µm)	Coalescing pre-filter (stainless steel end cap)	
	CF	99.99999% (0.01 µm)	High efficiency coalescing filter (stainless steel end cap)	

Technical Specifications

TGS Fabricated Carbon Steel

Model	Pipe Size DIN Flange	Flow Rate*				Operating Pressure	Replacement Element Code	Quanity
		L/s	m³/min	m³/h	cfm			
TGS214 Grade	DN 50					16-100 barg	TC 50 Grade	1
TGS216 Grade	DN 65					16-100 barg	TC 75 Grade	1
TGS218 Grade	DN 80					16-100 barg	TD 60 Grade	1
TGS220 Grade	DN 80	Dependant on the media required. On request.				16-100 barg	TD 75 Grade	1
TGS222 Grade	DN 100					16-100 barg	TC 75 Grade	2
TGS224 Grade	DN 100					16-100 barg	TC 75 Grade	3
TGS226 Grade	DN 150					16-100 barg	TC 75 Grade	4
TGS228 Grade	DN 150					16-100 barg	TC 75 Grade	6
TGS230 Grade	DN 200					16-100 barg	TC 75 Grade	8
TGS232 Grade	DN 200					16-100 barg	TC 75 Grade	10

TGE Stainless Steel

Model	Connection Type - T. Clamp Asme BPE	Flow Rate*				Operating Pressure**	Replacement Element Code	Quanity
		L/s	m³/min	m³/h	cfm			
TGE308/16 Grade -C/A	Clamp Asme BPE 1"	61	3.7	220	129	16/20	TE09 Grade	1
TGE314/16 Grade -C/A	Clamp Asme BPE 1½"	139	8.34	500	294	16/20	TE13 Grade	1
TGE316/16 Grade -C/A	Clamp Asme BPE 2"	217	13.0	780	459	16/20	TE14 Grade	1
TGE318/16 Grade -C/A	Clamp Asme BPE 2"	319	19.2	1150	677	16/20	TE18 Grade	1

*Stated flows are for operation at 7 bar (g) (102 psi g) with reference to 20°C, 1 bar (a), 0% relative water vapour pressure.
**PS+0/+16bar TS +0/+80 °C
**PS+0/+20bar TS +0/+55 °C

Product Selection & Correction Factors

To correctly select a filter model, the flow rate of the filter must be adjusted for the minimum operating (inlet) pressure at the point of installation.

1. Obtain the minimum operating (inlet) pressure and maximum gas flow rate at the inlet of the filter.
2. Select the correction factor for minimum inlet pressure from the CFMIP table (always round down e.g. for 5.3 bar, use 5 bar correction factor).
3. Calculate the minimum filtration capacity. Minimum Filtration Capacity = Gas Flow Rate x CFMIP.
4. Using the minimum filtration capacity, select a filter model from the flow rate tables above (filter selected must have a flow rate equal to or greater than the minimum filtration capacity).

CFMIP - Correction Factor Minimum Inlet Pressure

Minimum Inlet Pressure	bar g	1	2	3	4	5	6	7	8	9	10	11	12	13	14	15	16	17	18	19	20	21	22	23	24	25
	psi g	15	29	44	58	73	87	100	116	131	145	160	174	189	203	218	232	248	263	277	290	305	319	334	348	363

TGE Stainless Steel

Correction Factor	0.25	0.38	0.5	0.63	0.88	0.90	1.00	1.13	1.25	1.38	1.5	1.63	1.70	1.80	2.00	2.13

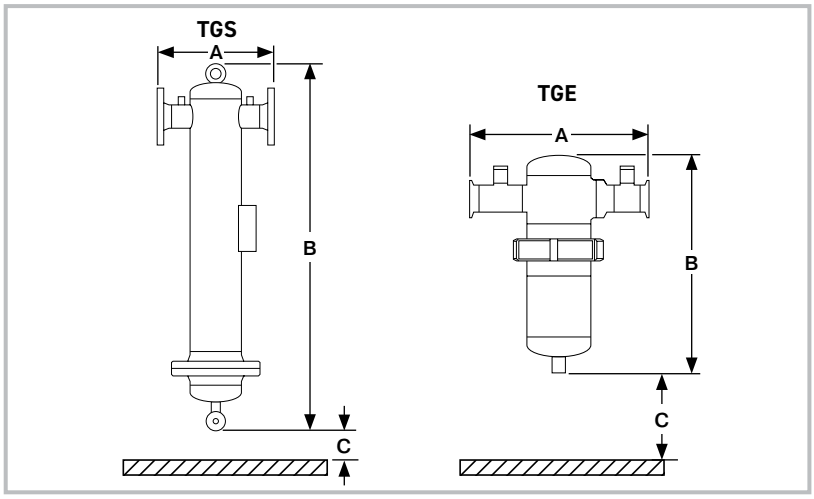

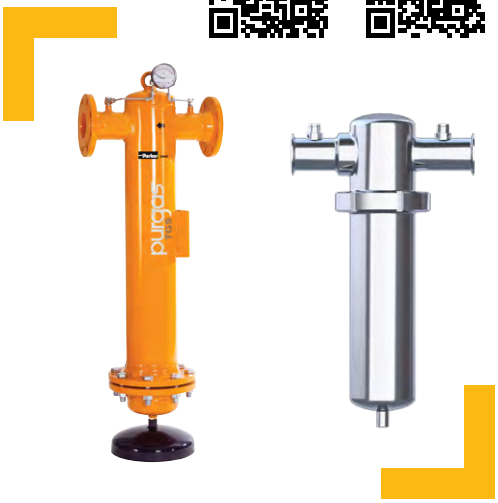

Weights & Dimensions

Model	Dimensions						Weight	
	A		B		C			
	mm	ins	mm	ins	mm	ins	kg	lbs
TGS214 Grade	380	15.0	931	36.7	315	12.4	31	68
TGS216 Grade	380	15.0	1180	46.5	530	20.9	38	84
TGS218 Grade	420	16.5	1180	46.5	530	20.9	42	92
TGS220 Grade	440	17.3	1320	52.0	530	20.9	44	97
TGS222 Grade	500	19.7	1440	56.7	550	21.7	101	222
TGS224 Grade	500	19.7	1440	56.7	550	21.7	102	224
TGS226 Grade	640	25.2	1590	62.6	550	21.7	136	299
TGS228 Grade	790	31.1	1650	65.0	550	21.7	220	484
TGS230 Grade	790	31.1	1730	68.1	550	21.7	252	554
TGS232 Grade	840	33.1	1780	70.1	550	21.7	353	777
TGE308/16 Grade **-C/A**	240	9.4	255	10.0	85	3.3	3.2	7.0
TGE314/16 Grade **-C/A**	250	9.8	307	12.1	140	5.5	3.6	7.9
TGE316/16 Grade **-C/A**	233	9.2	480	18.9	280	11	5.5	12.1
TGE318/16 Grade **-C/A**	233	9.2	775	30.6	530	20.9	7.1	15.7

Hydrogen Gas Filters - High Pressure/Medium Flow

Technical Specifications

Model	Connections (NPT)		*Filtration Effciency: 1 micron (93% efficient@ 0.01 micron) Gas Flow Rate (m^3/hr) at			Maximum Pressure		Operating Temperature		Element Code	Teflon† Seal Kit
	Inlet/ Outlet	Drain	Maximum Rated Pressure	50% Rated Maximum Pressure	25% Rated Maximum Pressure	barg	psig	Minimum °C (°F)	Maximum °C (°F)		
EU85	¼"	¼"	11,443	5,493	2,258	345	5003	-38 (36.4)	150 (302)	050-11-	22085
EU37/12	½"	⅛"	19,182	9,207	3,946	276	4003	-38 (36.4)	150 (302)	100-12-	22132
EU37/25	½"	⅛"	27,129	13,022	6,167	276	4003	-38 (36.4)	150 (302)	100-25-	22132
EU27/35	1"	¼"	11,757	5,996	3,058	55	798	-38 (36.4)	150 (302)	200-35-	22028
EU27/35-3000	1"	¼"	46,251	22,200	13,764	206	2987	-38 (36.4)	150 (302)	200-35-	22028
EU27/80	1"	¼"	12,794	6,525	3,328	55	798	-38 (36.4)	150 (302)	200-80-	22028
EU27/80-3000	1"	¼"	50,421	10,440	13,484	206	2987	-38 (36.4)	150 (302)	200-80-	22028
EU15/80S6	2"	¼"	31,912	15,275	8,300	35	508	-38 (36.4)	150 (302)	200-80-	22146

*Filter Grade D. Both coalescing and solids depth capture elements available for housings listed. Examples. EU85: 050-11-DX (coalescing), EU37/12: 100-12-DQ (particulate)

†Supplied with Viton seals as standard, optional Teflon seals available for Hydrogen applications.

Hydrogen flows calculated at NTP - Normal Temperature & Pressure is defined as air at 20°C and 1 atm. Filters may be installed in parallel to increase flow rates.

Where applicable all housings detailed conform to EU PED directive 2014/68/EU. Outside of PED, technical specifications conform to ASME Section VIII, div. 1 – latest edition.

Materials of Construction

Head:
316SS (1)

Bowl:
316SS (1)

Internals:
316SS (1)

Seals:

Viton
- EU85
- EU15/80S6

Teflon
- EU37/12
- EU37/25
- EU27/35
- EU27/35-3000
- EU27/80
- EU27/80-3000

NOTES

1. Constructed of materials which comply with NACE Specification MR-01-75. Certificate of compliance available on request.
2. Maximum temperature rating is limited to media limits, Q and X grades. For higher temperatures, consult the factory.
3. Teflon/PTFE Seals are the preferred material for for H_2 applications, Teflon to be ordered separately. Viton is also compatible with H_2 gas and is standard as fitted.

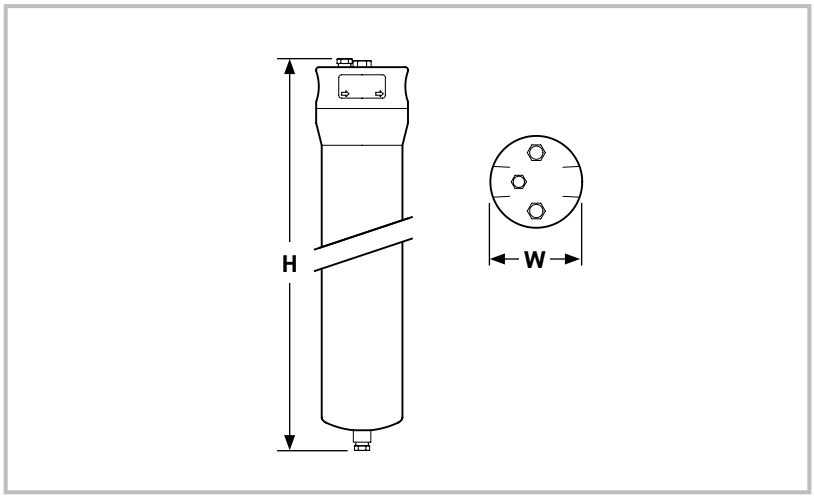

Weights & Dimensions

Model	Dimensions				Weight	
	Height		Width			
	mm	ins	mm	ins	kg	lbs
EU85	127	5.0	64	2.5	1.8	3.9
EU37/12	157	6.2	70	2.8	2.7	5.9
EU37/25	260	10.2	70	2.8	4.5	9.9
EU27/35	406	16.0	110	4.3	7.3	16.1
EU27/35-3000	406	16.0	110	4.3	7.3	16.1
EU27/80	685	27.0	101	4.0	9.1	20.1
EU27/80-3000	685	27.0	101	4.0	9.1	20.1
EU15/80S6	710	28.0	160	6.3	14.5	32

Replacement Elements and Seal Kits

Model	Element Code		Teflon† Seal Kit
	Coalescing	Dry Particulate	
EU85	050-11-DX	050-11-DQ	22085
EU37/12	100-12-DX	100-12-DQ	22132
EU37/25	100-25-DX	100-25-DQ	22132
EU27/35	200-35-DX	200-35-DQ	22028
EU27/35-3000	200-35-DX	200-35-DQ	22028
EU27/80	200-80-DX	200-80-DQ	22028
EU27/80-3000	200-80-DX	200-80-DQ	22028
EU15/80S6	200-80-DX	200-80-DQ	22146

†Supplied with Viton seals as standard, optional Teflon seals available for Hydrogen applications.

Biogas Treatment Systems

Parker Biogas Solutions, your 'single source' for advanced technologies and systems that deliver first class quality with global support and availability - all backed by the guarantees of the industry leader.

Raw Biogas Treatment

Biogas, originating from biomass, sewage plants and landfill sites is gaining increasing worldwide importance as a recognised renewable energy source. Biogas production can and will contribute in a significant way to future energy supplies replacing more and more existing fossil fuel sources such as coal, oil and natural gas.

Generally, biogas is saturated with water vapor and contains other impurities which, when used as fuel, must be removed to prevent corrosion and damage to equipment and systems and improve cogeneration unit efficiency.

The selection of effective biogas treatment equipment is therefore particularly important, both in optimising the cogeneration of electrical and thermal energy, making the most of the available renewable energy, and reducing energy consumption and operating costs to a minimum.

Biogas Filtration

Biogas produced in anaerobic digesters and landfills contains foams, small solid particles in suspension, greases, particulates and other contaminants which must be removed from the gas by filtration prior to any downstream equipment or pipework. Failure to remove these impurities may lead to a malfunction of devices and processes downstream.

The stainless steel Hyperfilter BioEnergy FFB has been specifically designed to prevent these undesired effects, available in a range of sizes matched to the needs of biogas applications:

Biogas Dehumidification Key Components

Biogas is usually saturated with water vapour and contains contaminants that need to be removed or reduced including hydrogen sulphide, carbon dioxide, chlorides, fluorides, siloxanes and aromatic compounds. Most of these elements are water-soluble; so by achieving efficient dehumidification it is possible to significantly reduce the water vapour content in the biogas and partially or completely remove some of these impurities.

Parker's solution is to dry the gas, firstly by cooling to around 5°C using a water-cooled heat exchanger working with a water chiller and secondly, by removing the condensed water with a cyclonic water separator.

A Hyperchill BioEnergy water chiller, Hypercool BioEnergy stainless steel heat exchanger and Hypersep BioEnergy centrifugal separator are the key components of a biogas treatment system. They have been specifically designed for biogas applications and provide safe and reliable operation in the harsh environments typically found at anaerobic digester and landfill biogas production sites.

Biogas Treatment System

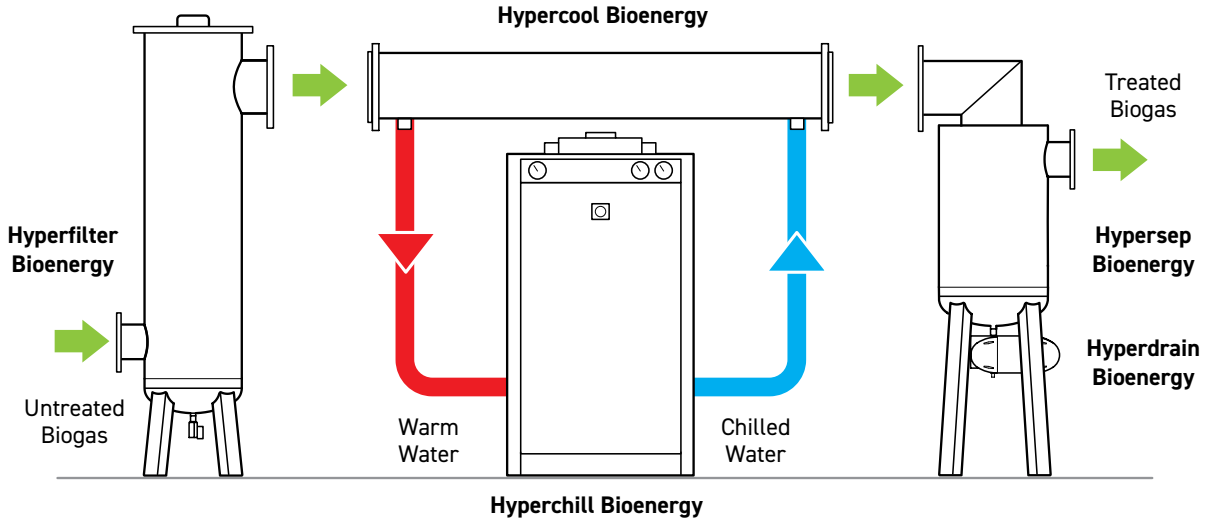

Standard Products

Hyperchill BioEnergy (ICEP-E and ICES-E Series)

- Chiller Output 8 – 360 kW
- Special coating for corrosive environment
- Pump & tank installed in casing
- Microprocessor controlled
- Ambient range -20°C to +48°C (up to ICEP120E, +45°C from ICE150)
- Compliant scroll refrigerant compressor
- IP54 protection as standard

Please visit page 134 for Hyperchill BioEnergy.

Hypercool BioEnergy (WFB Series)

- High cooling efficiency with low pressure drop design
- Material: Parts in contact with biogas are AISI304 or AISI316L, parts not in contact with biogas are AISI304
- Maximum working pressure: 0.5 barg

Hypersep BioEnergy (CSB Series)

- Cyclonic separator optimized for biogas applications
- High separation efficiency with very low pressure drop
- Material: Parts in contact with biogas are AISI304 or AISI316L
- Maximum working pressure: 0.5 barg

Optional Additions

The standard Parker Biogas Dehumidification Systems can be extended to include additional components such as a particulate filter, condensate drain and/or energy-saving, 'Gas2Gas' recuperator.

Hyperfilter BioEnergy (FFB)

- Particle removal: 5 or 20 µm
- Filtration efficiency 99.999%
- Differential pressure 2 mbar
- Material: AISI304 or AISI316L, with additional pickling and passivation treatment
- Maximum working pressure: 0.5 barg

Gas2Gas Recuperator BioEnergy (RBB)

- Free-cools incoming biogas to reduce chiller cooling load
- Free-heats outgoing biogas to reduce relative humidity thus eliminating the need for auxiliary heating
- High thermal transfer efficiency with very low pressure drop
- Material: AISI304 or AISI316L, with additional pickling and passivation treatment

Hyperdrain BioEnergy (HDF220BE)

- Designed to work with dirty condensate and for low pressure operation
- No electrical wiring
- No gas loss
- Parts in contact with condensate are stainless steel and reinforced polyamide, body treated with special Hiroshield treatment for optimal operation in harsh environments

BioEnergy Products

Hyperfilter BioEnergy

Performance Data

Model	Gas Flow*				Connections		Filter Elements
	L/S	m³/min	m³/h	cfm	In	Out	Quantity
FFB105	29	1.8	105	62	DN50	DN80	1
FFB265	74	4.4	265	156	DN80	DN125	1
FFB720	200	12.0	720	424	DN125	DN200	1
FFB1110	308	18.5	1110	653	DN200	DN300	1
FFB3180	695	41.7	2500	1472	DN300	DN450	1

*Nominal working conditions: gas inlet temperature 40°C (104°F), atmospheric pressure, 60% CH_4, 40% CO_2, pressure drop 3 mbar.

FFB Filters can work at higher gas flow rates with an increase in pressure drop (refer to Parker).

Weights & Dimensions

Model	Dimensions								Weight	
	A		B		C		D			
	mm	ins	mm	ins	mm	ins	mm	ins	kg	lbs
FFB105	440	17.3	1454	57.2	1330	52.4	420	16.5	32	70
FFB265	440	17.3	1424	56.1	1300	51.2	390	15.4	35	77
FFB720	625	24.6	1838	72.4	1595	62.8	545	21.5	99	218
FFB1110	633	24.9	1883	74.1	1650	65.0	600	23.6	108	238
FFB3180	1000	39.4	2208	86.9	1805	71.1	696	27.4	255	561

Hypercool BioEnergy

Performance Data

Model	Gas Flow				Connections	
	L/s	m³/min	m³/h	cfm	Gas	Water
WFB60	17	1	60	35	DN80	¾"
WFB105	29	1.8	105	62	DN80	¾"
WFB165	46	2.8	165	97	DN125	1"
WFB265	74	4.4	265	156	DN125	1"
WFB240	67	4	240	141	DN125	1"
WFB360	100	6	360	212	DN200	1¼"
WFB510	142	8.5	510	300	DN200	1¼"
WFB720	200	12	720	424	DN200	1¼"
WFB1110	308	18.5	1110	653	DN300	2"
WFB1620	450	27	1620	954	DN300	2"
WFB2380	661	39.7	2380	1401	DN450	2½"
WFB3180	883	53	3180	1872	DN450	2½"

Performances refer to models operating with gas flow rate at FAD 20°C (68°F) / 1 barA.

Nominal working conditions: gas inlet conditions 40°C (104°F) saturated 60% CH_4, 40% CO_2, water inlet temperature 1°C (34°F), gas outlet temperature 8°C (46°F) for models WFB60, WFB105, WFB165, WFB265, 4°C (39°F) for all other models. pressure drop 1.2 kPa with separator.

Weights & Dimensions

Model	Dimensions						Weight	
	A		B		C			
	mm	ins	mm	ins	mm	ins	kg	lbs
WFB60	1490	58.7	65.5	2.6	89	3.5	16	35
WFB105	1490	58.7	65.5	2.6	89	3.5	19	42
WFB165	1490	58.7	100.5	4.0	140	5.5	30	66
WFB265	1490	58.7	100.5	4.0	140	5.5	38	84
WFB240	1990	78.3	100.5	4.0	140	5.5	48	106
WFB360	1990	78.3	120.5	4.7	219	8.6	85	187
WFB510	1990	78.3	120.5	4.7	219	8.6	102	224
WFB720	1990	78.3	120.5	4.7	219	8.6	124	273
WFB1110	1990	78.3	144.5	5.7	324	12.8	196	431
WFB1620	1990	78.3	144.5	5.7	324	12.8	252	554
WFB2380	1990	78.3	179.5	7.1	457	18.0	405	891
WFB3180	1990	78.3	179.5	7.1	457	18.0	490	1078

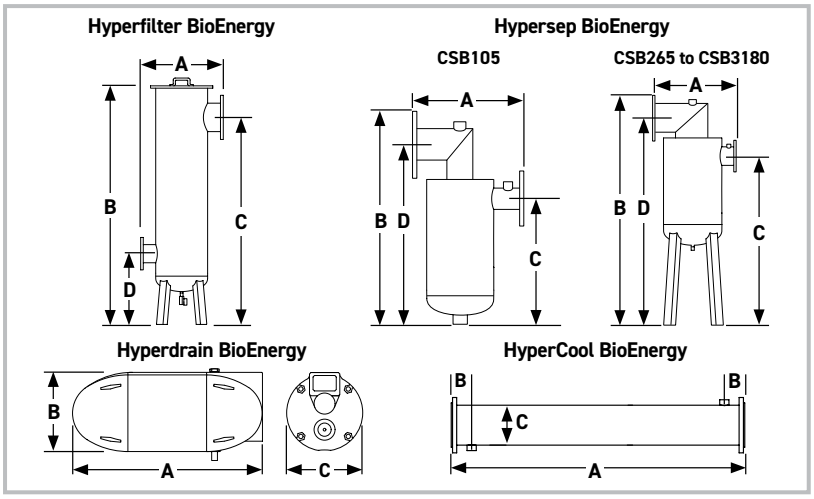

Hypersep BioEnergy

Performance Data

Model	Gas Flow				Connections	
	L/s	m³/h	m³/min	cfm	In	Out
CSB105	29	105	1.8	62	DN80	DN50
CSB265	74	265	4.4	156	DN125	DN80
CSB720	200	720	12.0	424	DN200	DN125
CSB1620	450	1620	27.0	954	DN300	DN200
CSB3180	883	3180	53.0	1872	DN450	DN300

Weights & Dimensions

Model	Dimensions								Weight	
	A		B		C		D			
	mm	ins	mm	ins	mm	ins	mm	ins	kg	lbs
CSB105	365.5	14.4	635.5	25.0	375.8	14.8	535.5	21.1	14	31
CSB265	460	18.1	1425	56.1	1038	40.9	1300	51.2	30	66
CSB720	570	22.4	1765	69.5	1293	50.9	1595	62.8	54	119
CSB1620	638	25.1	1747.5	68.8	1156	45.5	1525	60.0	88	194
CSB3180	833	32.8	2113	83.2	1264	49.8	1805	71.1	153	337

Hyperdrain BioEnergy

Performance Data

Model	Materials of Construction			Gas Flow				Connections		Maximum Pressure	
	Housing	Float	Lever	L/s	m³/h	m³/min	cfm	in	out	bar g	psi g
HDF220BE	Aluminium	Polyamide/ Stainless Steel	Polyamide/ Stainless Steel	2	6.5	108	4	1"	½"	1	14.5

Weights & Dimensions

Model	Dimensions						Weight	
	A		B		C			
	mm	ins	mm	ins	mm	ins	kg	lbs
HDF220BE	266	10.5	111	4.4	108	4.3	1.9	4

PCO2 Carbon Dioxide Quality Incident Protection Systems

From production plant to fountain / post mix and beer dispense, guaranteed CO_2 purity is assured.

The PCO2 Carbon Dioxide Quality Incident Protection System from Parker offers a comprehensive solution to preserve and guarantee the quality of gaseous carbon dioxide used in the sparkling beverage industry.

Using multi-layer gas adsorbent technology, the PCO2 range includes models for plant scale protection, as well as smaller variants for fountain / post mix and beer dispense applications respectively.

Operating as a vapour absorber to remove a wide range of potentially harmful carbon dioxide impurities, the system guarantees the gas quality to remain within industry and company guidelines, therefore preventing detrimental consequences to the finished beverage and to the producers reputation.

PCO2 quality incident production systems for production plant

The system for the production plant environment offers in-line quality incident protection against peak levels of trace impurities which may be present in beverage-grade carbon dioxide.

Typical production plant application

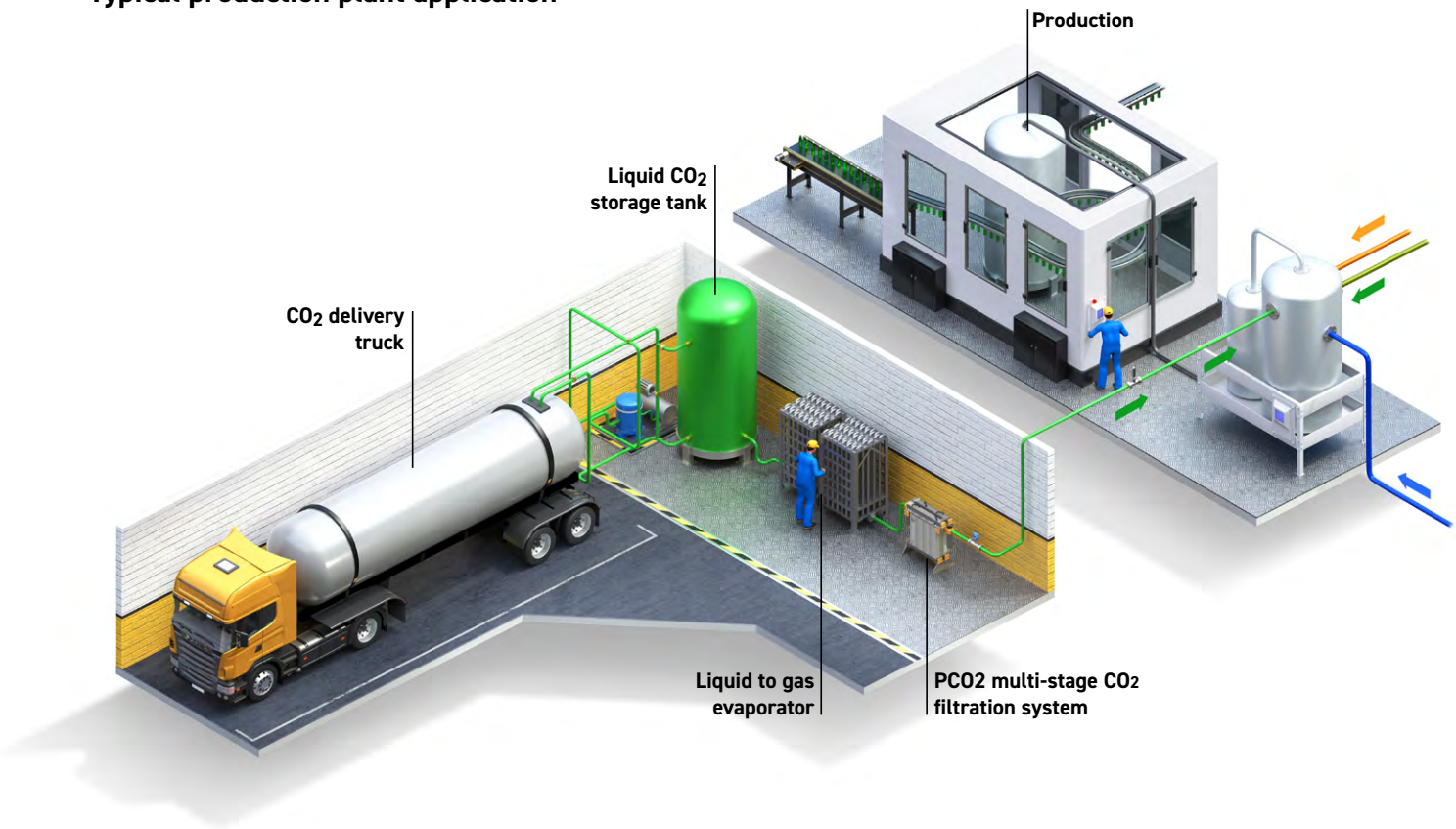

ISBT Quality Guidelines for Carbon Dioxide

The International Society of Beverage Technologists (ISBT) is the only organisation whose sole interest is the technical and scientific aspects of soft drinks and beverages.

The ISBT is a highly respected body which is dedicated to the promotion, development and dissemination of knowledge relating to the art and science of beverage technology.

The quality guidelines and analytical procedure bibliography has been developed by the ISBT to provide guidance for manufacturers of carbonated beverages and suppliers of carbon dioxide to the carbonated beverage industries about key characteristics for the quality and purity of carbon dioxide when used as a direct food additive in beverages.

The following table lists the voluntary quality standards taken from the document with relation to CO_2 quality.

Voluntary quality standards as listed in the ISBT Quality Guidelines

Parameter	Guideline	Rationale†
Purity:	99.9 % v/v min.	Process
Moisture:	20 ppm v/v max.	Process
Oxygen:	30 ppm v/v max.	Sensory
Carbon Monoxide:	10 ppm v/v max.	Process
Ammonia	2.5 ppm v/v max.	Process
Nitric Oxide / Nitrogen Dioxide:	2.5 ppm v/v max. (each)	Regulatory
Non-volatile Residue:	10 ppm w/w max.	Sensory
Non-volatile Organic Residue:	5 ppm w/w max.	Sensory
Phosphine:	To pass test (0.3 ppm v/v max.)	Regulatory
Total Volatile Hydrocarbons: (as Methane)	50 ppm v/v max. including 20 ppm v/v max. as total non-methane hydrocarbons	Sensory
Acetaldehyde:	0.2 ppm v/v max.	Sensory
Aromatic Hydrocarbon Content:	20 ppb v/v max.	Regulatory
Total Sulphur Content* (as S): (*Total sulphur-containing impurities excluding sulphur dioxide)	0.1 ppm v/v max.	Sensory
Sulphur Dioxide	1 ppm v/v max.	Sensory
Odour of Solid CO_2 (snow):	No foreign odour	Sensory
Appearance in water:	No colour or turbidity	Sensory
Odour and taste in water:	No foreign odour or taste	Sensory

Source: ISBT CO_2 quality & analytical procedure bibliography, 2019.

†Rationale definitions:

Sensory: Any attribute that negatively impacts the taste, appearance or odour of beverage.

Process: Any attribute that defines a key parameter in a controlled process and an important consideration in the beverage industry.

Regulatory: Any attribute whose limit is set by governing regulatory agencies.

PCO2 Carbon Dioxide Quality Incident Protection Systems

For the sparkling beverage industry

Technical Data

Model	Port Size*	Flow Rate		Quantity Required	Maximum Operating Pressure		Minimum Operating Temperature		Maximum Operating Temperature		Inlet CO_2 Quality†
		Kg/h	Lb/h		bar g	psi g	ºC	ºF	ºC	ºF	
PCO2-400	1"	181	400	1	20.7	300	-20	-4	40	104	ISBT Beverage Grade CO_2
PCO2-800	1½"	363	800	1	24.1	350	-20	-4	40	104	
PCO2-1600	1½"	726	1600	1	24.1	350	-20	-4	40	104	
PCO2-2400	1½"	1089	2400	1	24.1	350	-20	-4	40	104	
PCO2-3200	1½"	1451	3200	1	24.1	350	-20	-4	40	104	
PCO2-4000	1½"	1814	4000	1	24.1	350	-20	-4	40	104	
PCO2-4800	1½"	2177	4800	1	24.1	350	-20	-4	40	104	
PCO2-3200 Duplex**	1½"	2903	6400	2	24.1	350	-20	-4	40	104	
PCO2-4000 Duplex**	1½"	3628	8000	2	24.1	350	-20	-4	40	104	
PCO2-4800 Duplex**	1½"	4354	9600	2	24.1	350	-20	-4	40	104	

*All systems are supplied as NPT with stainless steel adapters 'NPT to BSP' as standard.

**Duplex systems are installed in parallel to double the flow.

†PCO2 CO_2 Systems are for gaseous CO_2 only.

All systems are rated at a maximum operating pressure of 24.1 bar g / 350 psi g. PCO2-400 is rated at 20.7 Bar g / 300 psi g.

Correction Factors

Inlet Pressure	bar g	3	4	5	6	7	8	9	10	11	12	13
	psi g	44	58	73	87	102	116	130	145	160	174	189
Correction factor		0.19	0.23	0.28	0.33	0.38	0.42	0.47	0.52	0.57	0.61	0.66

Inlet Pressure	bar g	14	15	16	17	18	19	20	21	22	23	24
	psi g	203	218	232	247	261	275	290	304	319	333	348
Correction factor		0.71	0.76	0.80	0.85	0.90	0.95	1	1	1	1	1

Operation

Stage 1
0.01 micron particle filtration
Removal of non-volatile organic residue (NVOR) and other contaminants down to 0.01 ppm

Stage 2
Removal of water vapour and partial removal of hydrocarbons

Stage 3
Primary removal of aromatic hydrocarbons (Benzene, Toluene etc and Acetaldehyde)

Stage 4
Removal of sulphur compounds (COS, H2S, DMS etc)

Stage 5
0.01 micron particle filtration

Stage 6*
Point of use VBACE sterile gas membrane. Hi Flow Tetpor II

*Optional - Sterilizing Grade: consult Parker for operational use

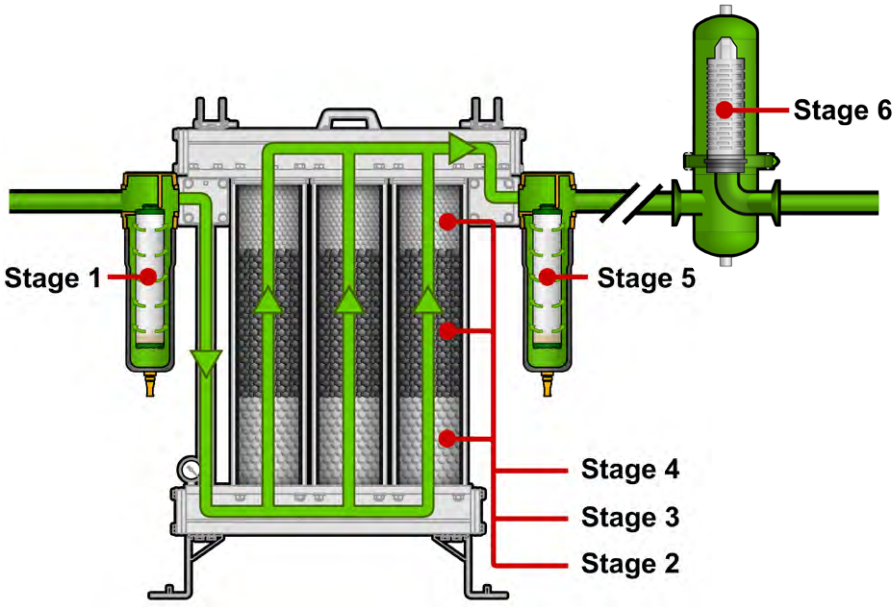

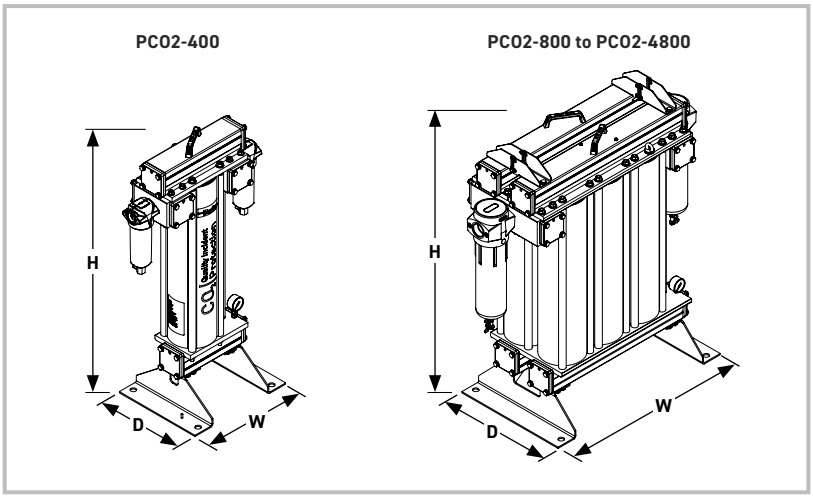

Weights & Dimensions

Model	Height (H)		Width (W)		Depth (D)		Clearance*		Weight	
	mm	ins	mm	ins	mm	ins	mm	ins	kg	lbs
PCO2-400	1035	40.8	564	22.2	350	13.7	680	27	75	165
PCO2-800	1060.7	41.8	632	24.9	450	17.7	680	27	84	185
PCO2-1600	1060.7	41.8	801	31.5	450	17.7	680	27	128	282
PCO2-2400	1060.7	41.8	970	39.4	450	17.7	680	27	172	379
PCO2-3200	1060.7	41.8	1139	44.8	450	17.7	680	27	217	478
PCO2-4000	1060.7	41.8	1308	51.5	450	17.7	680	27	260	573
PCO2-4800	1060.7	41.8	1477	58.1	450	17.7	680	27	304	670

*Clearance required for the removal and servicing of cartridges.

Preventative Maintenance Kits - Required Every 8000 Hrs (12 months)

Model	Part Number	Contents	Order Quantity
PCO2-400	MK-PCO2-400	1 x Desiccant Cartridge, 2 x Outlet Block O-Rings, 2 x P020-AA Filter Elements, 2 x IP50-AA Filter Elements, 2 x Filter Bowl O-Rings	1
PCO2-800	MK-PCO2-800	2 x Desiccant Cartridges, 2 x Outlet Block O-Rings, 2 x P035AA Filter Elements, 2 x IP50-AA Filter Elements, 2 x Filter Bowl O-Rings	1
PCO2-1600	MK-PCO2-1600	4 x Desiccant Cartridges, 2 x Outlet Block O-Rings, 2 x P035AA Filter Elements, 2 x IP50-AA Filter Elements, 2 x Filter Bowl O-Rings	1
PCO2-2400	MK-PCO2-2400	6 x Desiccant Cartridges, 2 x Outlet Block O-Rings, 2 x P035AA Filter Elements, 2 x IP50-AA Filter Elements, 2 x Filter Bowl O-Rings	1
PCO2-3200	MK-PCO2-3200	8 x Desiccant Cartridges, 2 x Outlet Block O-Rings, 2 x P035AA Filter Elements, 2 x IP50-AA Filter Elements, 2 x Filter Bowl O-Rings	1
PCO2-4000	MK-PCO2-4000	10 x Desiccant Cartridges, 2 x Outlet Block O-Rings, 2 x P035AA Filter Elements, 2 x IP50-AA Filter Elements, 2 x Filter Bowl O-Rings	1
PCO2-4800	MK-PCO2-4800	12 x Desiccant Cartridges, 2 x Outlet Block O-Rings, 2 x P035AA Filter Elements, 2 x IP50-AA Filter Elements, 2 x Filter Bowl O-Rings	1
PCO2-3200 (Duplex)	MK-PCO2-6400	16 x Desiccant Cartridges, 4 x Outlet Block O-Rings, 4 x P035AA Filter Elements, 4 x IP50-AA Filter Elements, 4 x Filter Bowl O-Rings	1
PCO2-4000 (Duplex)	MK-PCO2-8000	20 x Desiccant Cartridges, 4 x Outlet Block O-Rings, 4 x P035AA Filter Elements, 4 x IP50-AA Filter Elements, 4 x Filter Bowl O-Rings	1
PCO2-4800 (Duplex)	MK-PCO2-9600	24 x Desiccant Cartridges, 4 x Outlet Block O-Rings, 4 x P035AA Filter Elements, 4 x IP50-AA Filter Elements, 4 x Filter Bowl O-Rings	1

With OIL-X filter elements
(PCO2-400 Models only)

With OIL-X and OIL-X IP50 filter elements
(PCO2-80 0 to PCO2-4800 Models)

Hypercool Water Cooled Aftercoolers

Technical Data - Hypercool Water Cooled

Model	Air Flow	Maximum Pressure		Nominal Water Consumption	Cooler Connections	
	m³/min	bar g	psi g	m³/h	Air	Water
Fixed Tube-Bundle Version						
WFN050	50	12	174	10	DN125	1¼"
WFN090	90	12	174	11	DN200	1¼"
	Other Models Available On Request.					
Removable Tube-Bundle						
WRN007	7	16	232	1.5	DN 50	½"
WRN016	16	16	232	3.5	DN 80	¾"
WRN028	28	12	174	4	DN 100	1"
WRN050	50	12	174	10	DN 125	1¼"
WRN090	90	12	174	11	DN 200	1¼"
WRN130	130	10	145	13	DN 250	1½"
WRN170	170	10	145	17.5	DN 300	2"
WRN250	250	10	145	19	DN 350	DN 65
WRN350	350	10	145	37	DN 450	DN 80
WRN450	450	10	145	46	DN 500	DN 100
WRN550	550	10	145	50	DN 600	DN 100

Performances refer to clean cooler conditions with air at FAD 20°C/1 bar A, and at the following working conditions:
air suction 25°C/60% RH, 7 bar g working pressure, 120°C compressed air inlet temperature, 20°C cooling water inlet temperature, may differ from those indicated above. Maximum air inlet temperature: 200°C (for higher temperature and other gases contact Parker Sales Companies).

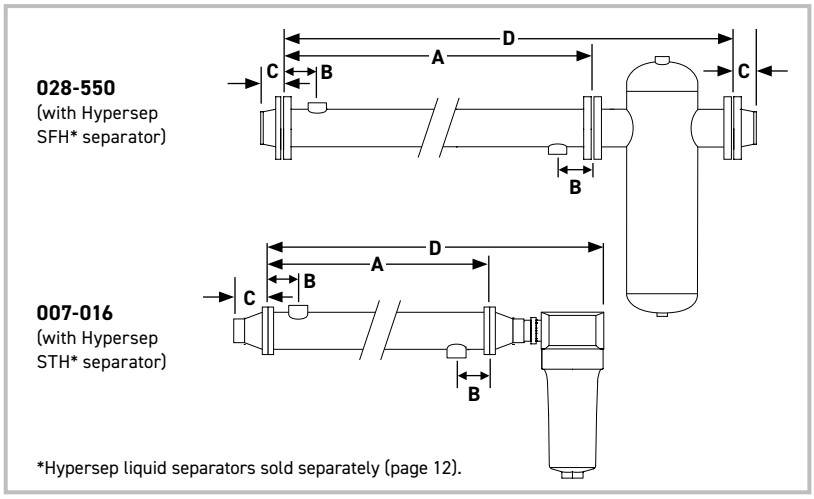

Weights & Dimensions

Model	A		B		C		D		Weight		Matching Hypersep* Separator
	mm	ins	mm	ins	mm	ins	mm	ins	kg	lbs	
Fixed Tube-Bundle Version											
WFN050	1300	51.2	100	3.9	58	2.3	1963	77.3	71	156	SFH066N
WFN090	1300	51.2	100	3.9	65	2.6	1990	78.3	121	266	SFH086N
Removable Tube-Bundle											
WRN007	1050	41.3	72	2.8	77	3.0	1257	49.5	20	44	STH013N
WRN016	1300	51.2	122	4.8	92	3.6	1563	61.5	37	81	STH021N
WRN028	1300	51.2	122	4.8	55	2.2	1703	67.0	54	119	SFH030N
WRN050	1300	51.2	123	4.8	58	2.3	1853	73.0	71	156	SFH066N
WRN090	1300	51.2	117	4.6	65	2.6	1873	73.7	161	354	SFH089N
WRN130	1300	51.2	116	4.6	71	2.8	1983	78.1	194	427	SFH142N
WRN170	1300	51.2	116	4.6	71	2.8	2053	80.8	244	537	SFH180N
WRN250	1500	59.1	196.5	7.7	71	2.8	2503	98.5	351	772	SFH280N
WRN350	1500	59.1	148.5	5.8	75	3.0	2703	106.4	400	880	SFH390N
WRN450	1500	59.1	199.5	7.9	78	3.1	3436	135.3	609	1340	SFH450N
WRN550	1500	59.6	200	7.9	83	3.3	3606	142.0	931	2048	SFH550N

*Hypersep liquid separators sold separately (page 12).

Hyperchill Plus-E Industrial Water Chiller (50Hz)

Technical Data

Model ICEP-E		003E	005E	008E	011E	015E	022E	027E	034E	041E	055E	065E	080E	100E	120E
Cooling capacity[1]	kW	2.9	4.9	7.8	11.1	15.0	21.9	26.6	33.1	40.2	56.3	65	78.3	103.7	120.6
Total absorbed power[1]	kW	1.2	1.6	1.6	2.3	3.6	5.0	5.7	6.7	8.3	12.8	15.3	18.5	24.2	29.8
EER[1]		2.38	3.16	4.79	4.78	4.10	4.40	4.64	4.95	4.82	4.55	4.25	4.25	4.10	4.04
SEPR HT[2]		NA	5.00	5.34	5.40	5.01	5.50	5.20	5.60	5.33	5.06	5.10	5.20	5.10	5.02
Power Supply	V/ph/Hz	230/1/50		400/3/50											
Protection index		IP33		IP54											
Refrigerant		R513A													

Compressor

Type		piston		hermetic scroll											
Compressors / circuit		1/1									2/1		2/2		
Max.abs.power (1 compressor)	kW	1.1	1.5	2.5	3.5	5.4	6.5	8.7	10.8	11.3	10.8	11.3	13.1	17.9	22.1

Axial fans

Quantity	no.	1					2						3		
Max.abs.power (1 fan)	kW	0.34	0.34	0.23	0.23	0.46	0.46	0.46	0.77	0.77	0.77	0.77	0.77	0.77	0.77
Air flow	m^3/h	1258	1258	3325	3325	5028	7823	10865	17337	17057	17057	17110	26832	26082	26082

Pump P30

Max.abs.power	kW	0.4	0.4	0.9	0.9	1.0	1.3	1.3	2.2	2.2	2.2	2.2	3.3	3.3	3.3
Water flow (nom./ max)[1]	m^3/h	0.5/ 1.9	0.8/ 1.9	1.3/ 4.5	1.9/ 4.5	2.6/ 5.4	3.8/ 9.6	4.6/ 9.6	5.7/ 18	6.9/ 18	9.7/ 18	11.2/ 18	13.6/ 31.2	17.8/ 31.2	20.7/ 31.2
Head pressure (nom./max)[1]	m H_2O	30/ 5	24/ 5	32/ 21.5	28.6/ 21.5	29/ 23	28/ 17.1	26.9/ 17.1	30/ 23.1	28.5/ 23.1	27.6/ 23.1	27/ 23.1	27.9/ 19	26.7/ 19	25.7/ 19

Weights and Dimensions

Width	mm	755	755	756	756	756	756	756	856	856	856	856	1050	1050	1050
Depth	mm	535	535	806	806	806	1206	1206	1956	1956	1956	1956	2500	2500	2500
Height	mm	801	801	1430	1430	1430	1430	1430	1680	1680	1680	1680	2012	2012	2012
Connections in/out	in	¾"	¾"	¾"	¾"	¾"	1"	1"	1½"	1½"	1½"	1½"	2"	2"	2"
Tank capacity	l	15	22.5	65	65	65	100	100	200	200	200	200	400	400	400
Weight (axial)[3]	kg	80	91	165	175	180	235	250	485	510	580	595	875	1010	1030

Noise level

Sound pressure (axial)[4]	dB(A)	52	52	50	50	51	52	52	53	54	55	55	58	59	59

1) At water in/out temperature 20/15°C, glycol 0%, either 25°C ambient temperature (air-cooled models).

2) Value calculated in accordance with the European regulation (EU) 2016/2281 with regards to Ecodesign requirements for high temperature process chillers.

3) Includes refrigerant charge and pallet (version without options and accessories).

4) Sound pressure: average value obtained in free field on a reflective surface at a distance of 10 m from the condensate side of the machine and at a height of 1.6 m from the unit support base. Values with tolerance ± 2 dB. The sound levels refer to operation of the unit under full load in nominal conditions.

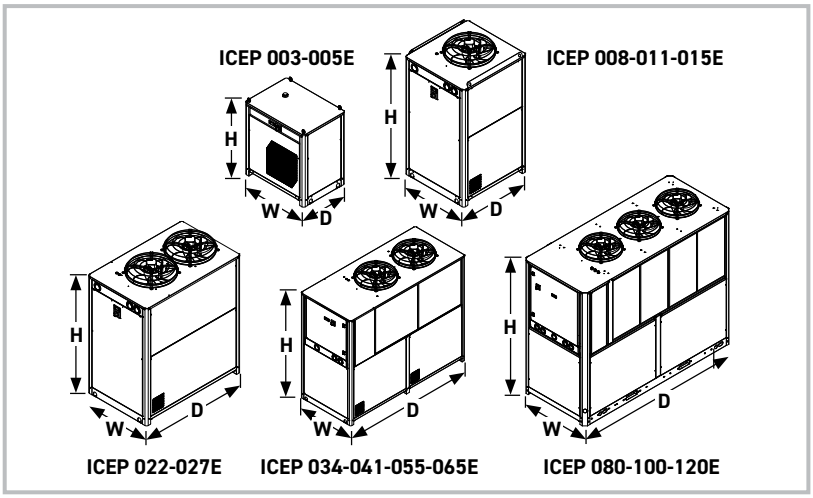

Part Number Breakdown/Product Key

Product Code	Model	Eco Friendly Design	-	Fluid to be Cooled	Condenser Section	Power Supply	Pumps	Water Tank	Control Water Temp.	Low Ambient	Low Water	Antifreeze	Fill Kit Mounted	Options
ICEP	003	E	-	W	A	S	P1	T	C	FS	LW	A	0	P
	005				W	T	P3	0	0	L1	00	0	1	C
	008				T		P5			L2			2	1
	011				B		00			00			3	T
	015				C		D3							
	022						D5							
	027													
	034													
	041													
	055													
	065													
	080													
	100													
	120													

ICEP = Hyperchill Plus

W = Water

A = Air Axial
W = Water
T = Tropicalised
B = BioEnergy & Aggressive Ambients
C = High Head Pressure Fans

S = 230V/ 1Ph/50Hz
T = 400V/ 3Ph/50Hz

P1 = Single Pump 1.5 bar
P3 = Single Pump 3 bar
P5 = Single Pump 5 bar
00 = No Pump
D3 = Dual Pump 3 bar
D5 = Dual Pump 5 bar

T = With Tank
0 = Without Tank

C = Close Control +/- 0.5°C
0 = Without Close Control

FS = Fan Speed Control (Low Ambient -10°C)
L1 = Low Ambient -10°C (Fan Step Control)
L2 = Low Ambient -20°C
00 = No Low Ambient

LW = Low Water
00 = NoLow Water

A = With Antifreeze
0 = Without Antifreeze

0 = Without Fill Kit
1 = Ambient Manual Fill Kit
2 = Ambient Automatic Fill Kit
3 = Pressurised Fill Kit

P = Harting Plug For Signals
C = Control Panel Cover
1 = Manual External Bypass
T = Modbus TCP/IP
No Character = No Options Selected

Hyperchill Plus-E Industrial Water Chiller (50Hz)

Versions

	ICEP003E	ICEP005E	ICEP008E	ICEP011E	ICEP015E	ICEP022E	ICEP027E	ICEP034E	ICEP041E	ICEP055E	ICEP065E	ICEP080E	ICEP100E	ICEP120E
Open Circuit	•	•	available with ambient manual fill kit fitted											
Closed Circuit		•	•	•	•	•	•	•	•	•	•	•	•	•
Air Cooled with Axial Fans	•	•	•	•	•	•	•	•	•	•	•	•	•	•
Air Cooled with High Head Pressure Fan For Air Channeling								•	•	•	•	•	•	•
Water Cooled						•	•	•	•	•	•	•	•	•

Standard Part Numbers - Air Cooled with Axial Fans

Hyperchill Plus-E Air Cooled with axial fans (non ferrous open hydraulic circuit with tank and 3 bar pump)	
ICEP003E	ICEP003E-WASP3T0000001
ICEP005E	ICEP005E-WASP3T0000001
Hyperchill Plus-E Air Cooled with axial fans (non ferrous pressurized closed hydraulic circuit with tank and 3 bar pump)	
ICEP005E	ICEP005E-WASP3T0000000
ICEP008E	ICEP008E-WATP3T0000000
ICEP011E	ICEP011E-WATP3T0000000
ICEP015E	ICEP015E-WATP3T0000000
ICEP022E	ICEP022E-WATP3T0L10000
ICEP027E	ICEP027E-WATP3T0L10000
ICEP034E	ICEP034E-WATP3T0L10000
ICEP041E	ICEP041E-WATP3T0L10000
ICEP055E	ICEP055E-WATP3T0L10000
ICEP065E	ICEP065E-WATP3T0L10000
ICEP080E	ICEP080E-WATP3T0L10000
ICEP100E	ICEP100E-WATP3T0L10000
ICEP120E	ICEP120E-WATP3T0L10000

Hyperchill Plus-E Industrial Water Chiller (50Hz)

Options and Standard Features - Air Cooled with Axial Fans

✓ = Option ● = Standard Feature

	ICEP-003E	ICEP-005E	ICEP-008E	ICEP-011E	ICEP-015E	ICEP-022E	ICEP-027E	ICEP-034E	ICEP-041E	ICEP-055E	ICEP-065E	ICEP-080E	ICEP-100E	ICEP-120E
Differential Pressure Switch	●	●	●	●	●	●	●	●	●	●	●	●	●	●
MODBUS RTU	●	●	●	●	●	●	●	●	●	●	●	●	●	●
Eyebolts	●	●	●	●	●									
Non ferrous hydraulic circuit with water tank and 3 bar pump	●	●	●	●	●	●	●	●	●	●	●	●	●	●
Differential dynamic set point			●	●	●	●	●	●	●	●	●	●	●	●
Low Ambient -10°C with fan step control						●	●	●	●	●	●	●	●	●
Low ambient -10°C with fan speed control			✓	✓	✓									
Low ambient -20°C with fan speed control, crankcase heater and electrical panel heater			✓	✓	✓	✓	✓	✓	✓	✓	✓	✓	✓	✓
No Tank	✓	✓	✓	✓	✓	✓	✓	✓	✓	✓	✓	✓	✓	✓
No Tank & No Pump	✓	✓	✓	✓	✓	✓	✓	✓	✓	✓	✓	✓	✓	✓
No Pump	✓	✓	✓	✓	✓	✓	✓	✓	✓	✓	✓	✓	✓	✓
P50 (5 bar pump)	✓	✓	✓	✓	✓	✓	✓	✓	✓	✓	✓	✓	✓	✓
P15 (1,5 bar pump)			✓	✓	✓	✓	✓	✓	✓	✓	✓	✓	✓	✓
Dual pump P30 (3 bar pump)								✓	✓	✓	✓	✓	✓	✓
Dual pump P50 (5 bar pump)												on request		
Harting Plug for signals	✓	✓	✓	✓	✓	✓	✓	✓	✓	✓	✓			
Close Control (+/- 0,5°C)	✓	✓	✓	✓	✓	✓	✓	✓	✓	✓	✓	on request		
Low Water -10°C			✓	✓	✓	✓	✓	✓	✓	✓	✓	✓	✓	✓
Antifreeze Heating			✓	✓	✓	✓	✓	✓	✓	✓	✓	✓	✓	✓
BioEnergy & Aggressive ambient protection			✓	✓	✓	✓	✓	✓	✓	✓	✓	✓	✓	✓
Tropicalization (ambient temperature >48°C)			on request											
Low Ambient -30°C			on request											

Hyperchill Plus-E Industrial Water Chiller (50Hz)

Standard Part Numbers - Air Cooled with High Head Pressure Fan For Air Channeling

Hyperchill Plus-E Air Cooled with high head pressure fans for air channeling (non ferrous pressurized closed hydraulic circuit with tank and 3 bar pump)	
ICEP022E	N/A
ICEP027E	N/A
ICEP034E	ICEP034E-WCTP3T0L10000
ICEP041E	ICEP041E-WCTP3T0L10000
ICEP055E	ICEP055E-WCTP3T0L10000
ICEP065E	ICEP065E-WCTP3T0L10000
ICEP080E	ICEP080E-WCTP3T0L10000
ICEP100E	ICEP100E-WCTP3T0L10000
ICEP120E	ICEP120E-WCTP3T0L10000

Standard Part Numbers - Water Cooled

Hyperchill Plus-E Water Cooled (non ferrous pressurized closed hydraulic circuit with tank and 3 bar pump)	
ICEP022E	ICEP022E-WWTP3T0L10000
ICEP027E	ICEP027E-WWTP3T0L10000
ICEP034E	ICEP034E-WWTP3T0L10000
ICEP041E	ICEP041E-WWTP3T0L10000
ICEP055E	ICEP055E-WWTP3T0L10000
ICEP065E	ICEP065E-WWTP3T0L10000
ICEP080E	ICEP080E-WWTP3T0L10000
ICEP100E	ICEP100E-WWTP3T0L10000
ICEP120E	ICEP120E-WWTP3T0L10000

Options & Standard Features - Air Cooled with High Head Pressure Fan For Air Channeling

	ICEP034E	ICEP041E	ICEP055E	ICEP065E	ICEP080E	ICEP100E	ICEP120E
Differential Pressure Switch	●	●	●	●	●	●	●
MODBUS	●	●	●	●	●	●	●
Non ferrous Hydraulic circuit with water tank and 3 bar pump	●	●	●	●	●	●	●
Low Ambient -10°C	●	●	●	●	●	●	●
Differential Dynamic Set Point	●	●	●	●	●	●	●
No Tank	✓	✓	✓	✓	✓	✓	✓
No Tank and No Pump	✓	✓	✓	✓	✓	✓	✓
No Pump	✓	✓	✓	✓	✓	✓	✓
P50 (5 bar pump)	✓	✓	✓	✓	✓	✓	✓
P15 (1,5 bar pump)	✓	✓	✓	✓	✓	✓	✓
Dual pump P30 (3 bar pump)	✓	✓	✓	✓	✓	✓	✓
Dual pump P50 (5 bar pump)					✓	✓	✓
Harting Plug for Signals	✓	✓	✓	✓			
Close Control (+/- 0,5°C)	✓	✓	✓	✓	on request		
Low Water -10°C	✓	✓	✓	✓	✓	✓	✓
Anti-Freeze Heating	✓	✓	✓	✓	✓	✓	✓

Options & Standard Features - Water Cooled

	ICEP022E	ICEP027E	ICEP034E	ICEP041E	ICEP055E	ICEP065E	ICEP080E	ICEP100E	ICEP120E
Differential Pressure Switch	●	●	●	●	●	●	●	●	●
MODBUS	●	●	●	●	●	●	●	●	●
Non ferrous Hydraulic circuit with water tank and 3 bar pump	●	●	●	●	●	●	●	●	●
Low Ambient -10°C	●	●	●	●	●	●	●	●	●
Differential Dynamic Set Point	●	●	●	●	●	●	●	●	●
No Tank	✓	✓	✓	✓	✓	✓	✓	✓	✓
No Tank and No Pump	✓	✓	✓	✓	✓	✓	✓	✓	✓
No Pump	✓	✓	✓	✓	✓	✓	✓	✓	✓
P50 (5 bar pump)	✓	✓	✓	✓	✓	✓	✓	✓	✓
P15 (1,5 bar pump)	✓	✓	✓	✓	✓	✓	✓	✓	✓
Dual pump P30 (3 bar pump)			✓	✓	✓	✓	✓	✓	✓
Dual pump P50 (5 bar pump)							✓	✓	✓
Harting Plug for Signals	✓	✓	✓	✓	✓	✓			
Close Control (+/- 0,5°C)	✓	✓	✓	✓	✓	✓	on request		
Low Water -10°C	✓	✓	✓	✓	✓	✓	✓	✓	✓
Anti-Freeze Heating	✓	✓	✓	✓	✓	✓	✓	✓	✓

✓ = Option ● = Standard Feature

Hyperchill Plus-E Industrial Water Chiller (60Hz with cETLus certification)

Part Number Breakdown/Product Key

Product Code	Model	Eco Friendly Design	-	Fluid to be Cooled	Condenser Section	Power Supply	Pumps	Water Tank	Control Water Temperature	Low Ambient	Low Water	Antifreeze	Fill Kit Mounted	Options
ICEP	008	E	-	W	A	G	P3	T	C	FS	00	0	0	P
	011				B		P5	0	0	L1	LW		1	C
	015						00			L2			2	1
	022						D3			L3			3	T
	024									00				
	027													
	034													
	041													
	055													
	065													
	080													
	100													
	120													

ICEP = Hyperchill Plus

W = Water

A = Air Axial

B = Air Axial Bioenergy

G = 460V/3Ph/60Hz

P3 = Single Pump 3 bar

P5 = Single Pump 5 bar

00 = No Pump

D3 = Dual Pump 3 bar

T = With Tank

0 = Without Tank

C = Close Control +/- 0.5°C

0 = Without Close Control

FS = Fan Speed Control (Low Ambient -10°C)

L1 = Low Ambient -10°C (Fan Step Control)

L2 = Low Ambient -20°C

L3 = Low Ambient -30°C

00 = No Low Ambient

00 = No Low Water

LW = Low Water

0 = Without Antifreeze

0 = Without Fill Kit

1 = Ambient Manual Fill Kit

2 = Ambient Automatic Fill Kit

3 = Pressurised Fill Kit

P = Harting Plug For Signals

C = Control Panel Cover

1 = Manual External Bypass

T = Modbus TCP/IP

No Character = No Options Selected

Versions

	ICEP008E	ICEP011E	ICEP015E	ICEP022E	ICEP027E	ICEP034E	ICEP041E	ICEP055E	ICEP065E	ICEP080E	ICEP100E	ICEP120E
Open Circuit	available with ambient manual fill kit fitted											
Closed Circuit	•	•	•	•	•	•	•	•	•	•	•	•
Air Cooled with Axial Fans	•	•	•	•	•	•	•	•	•	•	•	•

Hyperchill Plus-E Industrial Water Chiller (60Hz)

Standard Part Numbers - Air Cooled with Axial Fans

Hyperchill Plus-E Air Cooled with axial fans (non ferrous pressurized closed hydraulic circuit with tank and 3 bar pump)	
ICEP008E	ICEP008E-WAGP3T0000000
ICEP011E	ICEP011E-WAGP3T0000000
ICEP015E	ICEP015E-WAGP3T0000000
ICEP022E	ICEP022E-WAGP3T0L10000
ICEP027E	ICEP027E-WAGP3T0L10000
ICEP034E	ICEP034E-WAGP3T0L10000
ICEP041E	ICEP041E-WAGP3T0L10000
ICEP055E	ICEP055E-WAGP3T0L10000
ICEP065E	ICEP065E-WAGP3T0L10000
ICEP080E	ICEP080E-WAGP3T0L10000
ICEP100E	ICEP100E-WAGP3T0L10000
ICEP120E	ICEP120E-WAGP3T0L10000

Options & Standard Features - Air Cooled with Axial Fans

✓ = Option ● = Standard Feature

	ICEP008E	ICEP011E	ICEP015E	ICEP022E	ICEP027E	ICEP034E	ICEP041E	ICEP055E	ICEP065E	ICEP080E	ICEP100E	ICEP120E
Differential pressure switch	•	•	•	•	•	•	•	•	•	•	•	•
MODBUS RTU	•	•	•	•	•	•	•	•	•	•	•	•
Eyebolts	•	•	•									
Non Ferrous hydraulic circuit with water tank and 3 bar pump	•	•	•	•	•	•	•	•	•	•	•	•
Differential dynamic set-point	•	•	•	•	•	•	•	•	•	•	•	•
Low Ambient -10°C with fan step control				•	•	•	•	•	•	•	•	•
Low Ambient -10°C with fan speed control	✓	✓	✓									
Low Ambient -20°C with fan speed control, crankcase heater and electrical panel heater	✓	✓	✓	✓	✓	✓	✓	✓	✓	✓	✓	✓
Low Ambient -30°C (to be offered with control panel cover)	✓	✓	✓	✓	✓	✓	✓	✓	✓	✓	✓	✓
No Tank	✓	✓	✓	✓	✓	✓	✓	✓	✓	✓	✓	✓
No Tank & No Pump	✓	✓	✓	✓	✓	✓	✓	✓	✓	✓	✓	✓
No Pump	✓	✓	✓	✓	✓	✓	✓	✓	✓	✓	✓	✓
P30 (3 bar pump)	•	•	•	•	•	•	•	•	•	•	•	•
P50 (5 bar pump)	✓	✓	✓	✓	✓	✓	✓	✓	✓	✓	✓	✓
Dual Pump P30 (3 bar pump)						✓	✓	✓	✓	✓	✓	✓
Hartiing Plug for Signals	✓	✓	✓	✓	✓	✓	✓	✓	✓	✓	✓	✓
Close Control (+/-0,5°C)	✓	✓	✓	✓	✓	✓	✓	✓	✓	✓	✓	✓
Low Water -10°C	✓	✓	✓	✓	✓	✓	✓	✓	✓	✓	✓	✓
BioEnergy & Aggressive ambients protection	✓	✓	✓	✓	✓	✓	✓	✓	✓	✓	✓	✓

Hyperchill Plus-E - Kits and Accessories

Available Kits & Accessories

Description	ICEP003E	ICEP005E	ICEP008E - ICEP015E	ICEP022E-ICEP027E	ICEP034E-ICEP065E	ICEP080E - ICEP080E - ICEP120E
Fill kit - ambient manual* ** Non-ferrous ambient manual kit for water filling in any installation.			398H785314E	398H785314E	398H785314E	398H785314E
Fill kit - ambient automatic* ** Non-ferrous ambient automatic kit for water filling in any installation.			398H785316E	398H785316E	398H785316E	398H785316E
Fill kit - pressurised automatic* ** Non-ferrous pressurized, automatic kit, with expansion tank. For water filling in any installation.		398H785312E	398H785304E	398H785304E	398H785304E	398H785325E
Remote control - base Base version for remote ON/OFF and general alarm monitoring.	398H785010E	398H785010E	398H785010E	398H785010E	398H785010E	398H785010E
Remote control - advanced Advanced version for complete remote unit monitoring, with master/slave function included.	398H785322E	398H785322E	398H785322E	398H785322E	398H785322E	398H785322E
MODBUS TCP/IP* **	398H785272E	398H785272E	398H785272E	398H785272E	398H785272E	398H785272E
Wheels	398H785301E	398H785301E	398H785301E			
Control panel cover* **			398H785303E	398H785303E	398H785303E	398H785323E
Manual external bypass* ** Non-ferrous, externally adjustable allowing the correct flow through the system to be set.	398H785305E	398H785305E	398H785305E	398H785306E	398H785317E	398H785324E

*** From model ICEP008E to model ICEP120E: ambient manual and automatic fill kit, pressurised automatic fill kit, control panel cover, manual external by-pass and Modbus TCP/IP can be supplied already installed or loose.

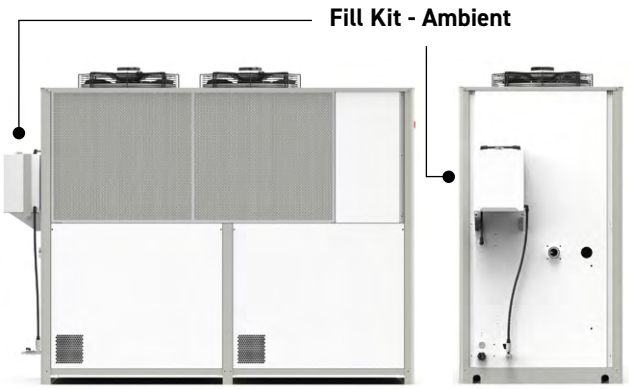

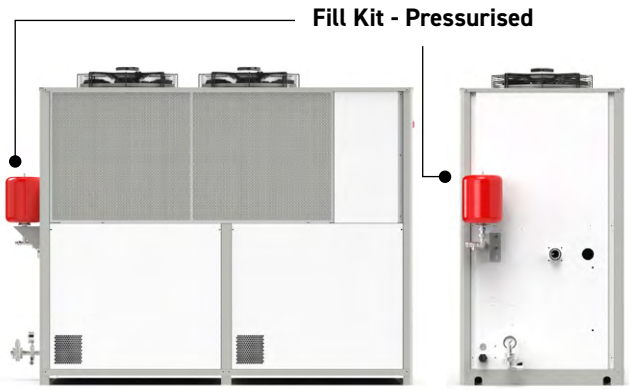

Hyperchill Smart-E Industrial Water Chiller (50Hz)

Technical Data

Model		ICES160E	ICES200E	ICES240E	ICES320E	ICES400E	ICES470E	ICES580E
Nominal cooling capacity[1]	**kW**	161.2	187.5	236.2	320.3	390.2	472.8	586
Nominal total absorbed Power[1]	**kW**	31.7	41.1	52.6	68.1	78.9	103.4	123.4
EER[1]		5.09	4.56	4.49	4.70	4.94	4.57	4.75
SEPR HT[2]		5.8	5.29	5.20	5.45	5.58	5.31	5.50
Cooling capacity[3]		112.2	130.3	165.0	224.5	272.4	330.2	414.9
Total absorbed power[3]		35.2	44.8	57.0	74.3	86.4	111.8	133.0
EER[3]		3.19	2.91	2.89	3.02	3.15	2.95	3.12
Power supply	**V/ph/Hz**	400 / 3 / 50						
Electrical protection class		IP54						
Refrigerant		R1234ze						
Compressor								
Type		Scroll						
Compressors/circuit		2 / 2			4 / 2			
Axial Fans								
Quantity	**n.°**	2		3	4	6		8
Condenser Air flow	**m^3/h**	39959		57702	76889	115333		153778
Pump P30 (optional from size ICES320E)								
Water flow (nom./ max)[6]	**m^3/h**	27.6/42	32.1/42	40.4/42	55.3/72	66.8/72	80.9/132	100.2/138
Head pressure (nom./max)[6]	**m H_2O**	33/27	31/27	29/27	33/27	28/27	28/17	30/20
Weights and Dimensions								
Width	**mm**	1400	1400	1400	2150	2150	2150	2150
Depth	**mm**	3540	3540	3540	3500	3500	3500	4580
Height	**mm**	2220	2220	2220	2480	2480	2480	2480
Water connections inlet/outlet	**in**	2½"	2½"	2½"	Victaulic DN100 4"	Victaulic DN100 4"	Victaulic DN100 4"	Victaulic DN100 4"
Total water storage capacity (with tank)	**ltr**	950	950	950	500	500	500	500
Weight[4]	**kg**	1600	1800	1850	2530	2880	3200	4000
Noise Level								
Sound pressure[5]	**dB(A)**	62	62	65	65	65	68	68

1) **Nominal conditions:** water inlet 20°C/outlet 15°C, ambient 25°C, glycol 0% (according to EN 14511).

2) Value calculated in accordance with the European regulation (EU) 2016/2281 with regards to Ecodesign requirements for high temperature process chillers.

3) **Rating conditions:** water inlet 12°C/outlet 7°C, ambient 35°C, glycol 0% (according to EN14511-2).

4) Includes refrigerant charge and pallet (version without options and accessories).

5) **Sound pressure:** average value obtained in free field on a reflective surface at a distance of 10 m from the condensate side of the machine and at a height of 1.6 m from the unit support base. Values with tolerance ± 2 dB. The sound levels refer to operation of the unit under full load in nominal conditions.

6) Values declared according to pump supplier; max flow and head pressure depends on working condition and internal chiller pressure drop.

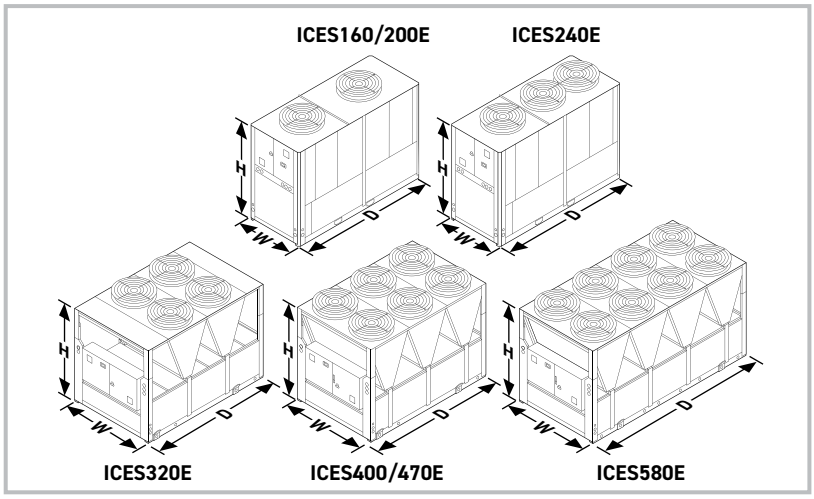

Part Number Breakdown/Product Key

Product Code	Model	Eco Friendly Design	-	Fluid to be Cooled	Condenser Section	Power Supply	Pumps	Water Tank	Control Water Temperature	Low Ambient	Low Water	Antifreeze	Fill Kit Mounted	Options
ICES	160	E	-	W	A	T	P1	T	0	L1	LW	A	0	C
	200				W		P3	0		L2		0		
	240				B		P5							
	320						D3							
	400						D5							
	470						00							
	580													

ICES = Hyperchill Smart

W = Water

A = Air Axial
W = Water
B = BioEnergy & Aggressive Ambients

T = 400V/3Ph/50Hz

P1 = Single Pump 1.5 bar
P3 = Single Pump 3 bar
P5 = Single Pump 5 bar
D3 = Dual Pump 3 bar
D5 = Dual Pump 5 bar
00 = No Pump

T = With Tank
0 = Without Tank

0 = Without Close Control

L1 = Low Ambient -10°C
L2 = Low Ambient -20°C

LW = Water temperature up to -10°C

A = With Antifreeze
0 = Without Antifreeze

0 = Without Fill Kit

C = Control Panel Cover
No Character = No Options Selected

Hyperchill Smart-E Industrial Water Chiller (50Hz)

Versions

Model	ICES160E	ICES200E	ICES240E	ICES320E	ICES400E	ICES470E	ICES580E
Air Cooled	•	•	•	•	•	•	•
Water Cooled	•	•	•				
Low Noise	on request	on request	on request	on request	on request	on request	on request

Standard Part Numbers - Air Cooled with Axial Fans

ICES160E	ICES160E-WATP3T0L1LW00
ICES200E	ICES200E-WATP3T0L1LW00
ICES240E	ICES240E-WATP3T0L1LW00
ICES320E	ICES320E-WAT0000L1LW00
ICES400E	ICES400E-WAT0000L1LW00
ICES470E	ICES470E-WAT0000L1LW00
ICES580E	ICES580E-WAT0000L1LW00

Standard Part Numbers - Water Cooled

ICES160E	ICES160E-WWTP3T0L1LW00
ICES200E	ICES200E-WWTP3T0L1LW00
ICES240E	ICES240E-WWTP3T0L1LW00

Hyperchill Smart-E Industrial Water Chiller (50Hz)

Options & Standard Features

✓ = Option ● = Standard Feature

Model	ICES160E	ICES200E	ICES240E	ICES320E	ICES400E	ICES470E	ICES580E
MODBUS RTU / TCP IP	●	●	●	●	●	●	●
Differential pressure switch	●	●	●	●	●	●	●
Low ambient -10°C	●	●	●	●	●	●	●
Low water temperature up to -10°C	●	●	●	●	●	●	●
Hydraulic circuit with water storage tank and 3 bar pump	●	●	●				
No tank and/or no pump	✓	✓	✓	●	●	●	●
Non ferrous hydraulic circuit	on request	on request					
Buffer tank				✓	✓	✓	✓
P50 (5 bar pump)	✓	✓	✓	✓	✓	✓	✓
P30 (3 bar pump)	●	●	●	✓	✓	✓	✓
P15 (1.5 bar pump)	✓	✓	✓	✓	✓	on request	on request
Dual pump P30 (3 bar pump)	✓	✓	✓	✓	✓	✓	✓
Dual pump P50 (5 bar pump)	✓	✓	✓	✓	✓	✓	✓
BioEnergy and aggressive ambient protection*	✓	✓	✓	✓	✓	✓	✓
Anti-freeze heating	✓	✓	✓	✓	✓	✓	✓
Low ambient -20°C*	✓	✓	✓	✓	✓	✓	✓
Low ambient -30°C (with control panel cover)*	on request	on request	on request	on request	on request	on request	on request
Compressor hoods	on request	on request	on request	on request	on request	on request	on request

*Not available for water cooled version

Available Kits & Accessories (supplied loose)

Description	ICES160 -240E	ICES320 -580E
Fill kit - ambient manual	398H785327E	
Fill kit - ambient automatic	398H785328E	
Fill kit - pressurised automatic with expansion tank (18 liters for ICES160-200-240E, 24 liters for ICES320E-400-470-580E)	398H785329E	398H785330E
Remote control - advanced Complete remote unit monitoring, with master/slave function included	398H785331E	
Control Panel Cover*	398H785332E	
Manual External By-Pass with PRV valve	398H785333E	
Metallic mesh filters for condenser module protection 2 kits required for ICES320E - 3 kits for ICES400-470E - 4 kits for ICES580E	Standard	398H785334E

*Control panel cover can be supplied already loose or already installed on all models

Replacement Filter Elements and Maintenance Kits For Legacy Parker domnick hunter Products

OIL-X EVOLUTION Elements

Filter Model	Replacement Element
AO005	P005AO
AO010	P010AO
AO015	P015AO
AO020	P020AO
AO025	P025AO
AO030	P030AO
AO035	035AO
AO040	040AO
AO045	045AO
AO050	050AO
AO055	055AO
AO060	P060AO requires 3 per filter
AA005	P005AA
AA010	P010AA
AA015	P015AA
AA020	P020AA
AA025	P025AA
AA030	P030AA
AA035	035AA
AA040	040AA
AA045	045AA
AA050	050AA
AA055	055AA
AA060	P060AA requires 3 per filter
ACS005	P005ACS
ACS010	P010ACS
ACS015	P015ACS
ACS020	P020ACS
ACS025	P025ACS
ACS030	P030ACS
ACS035	035ACS
ACS040	040ACS
ACS045	045ACS
ACS050	050ACS
ACS055	055ACS
ACS060	P060ACS requires 3 per filter

OIL-X EVOLUTION Combination Elements

Filter Model	Replacement Elements
AC010	P010AA
	010AC
AC015	P015AA
	015AC
AC020	P020AA
	020AC
AC025D	P025AA
	025DAC
AC025E	P025AA
	025EAC
AC030	P030AA
	030AC

OIL-X EVOLUTION OVR Maintenance Kits

Model	Maintenance Kit	No. Required
OVR100E	100OVR	1
OVR150H	100OVR	2
OVR200H	100OVR	4
OVR250J	100OVR	6

OIL-Xplus Combination Elements

Filter Model	Replacement Elements
AC-0006G	K009AA
	K006AC
AC-0013G	K017AA
	K013AC
AC-0025G	K030AA
	K025AC
AC-0040G	K058AA
	K040AC
AC-0065G	K145AA
	K065AC
AC-0085G	K145AA
	K085AC

OIL-Xplus Advantage Elements

Filter Model	Replacement Element
AO-0003G	K003AO
AO-0009G	K009AO
AO-0017G	K017AO
AO-0030G	K030AO
AO-0058G	K058AO
AO-0080G	K145AO
AO-0125G	K145AO
AO-0145G	K145AO
AO-0205G	K220AO
AO-0220G	K220AO
AO-0330G	K330AO
AO-0405G	K430AO
AO-0430G	K430AO
AO-0620G	K620AO
AO-1000G	K330AO requires 3 per filter
AA-0003G	K003AA
AA-0009G	K009AA
AA-0017G	K017AA
AA-0030G	K030AA
AA-0058G	K058AA
AA-0080G	K145AA
AA-0125G	K145AA
AA-0145G	K145AA
AA-0205G	K220AA
AA-0220G	K220AA
AA-0330G	K330AA
AA-0405G	K430AA
AA-0430G	K430AA
AA-0620G	K620AA
AA-1000G	K330AA requires 3 per filter
ACS-0009G	K009ACS
ACS-0017G	K017ACS
ACS-0030G	K030ACS
ACS-0058G	K058ACS
ACS-0080G	K145ACS
ACS-0125G	K145ACS
ACS-0145G	K145ACS
ACS-0205G	K220ACS
ACS-0220G	K220ACS
ACS-0330G	K330ACS
ACS-0405G	K430ACS
ACS-0430G	K430ACS
ACS-0620G	K620ACS
ACS-1000G	K330ACS requires 3 per filter

OIL-X/OIL-X EVOLUTION Multi-box Elements

Model / Housing	Part Number	Box Quantity
AO010	P010AOX25	25
AA010	P010AAX25	25
ACS010	P010ACSX25	25
AO015	P015AOX25	25
AA015	P015AAX25	25
ACS015	P015ACSX25	25
AO020	P020AOX25	25
AA020	P020AAX25	25
ACS020	P020ACSX25	25
AO25	P025AOX12	12
AA025	P025AAX12	12
ACS025	P025ACSX12	12
AO030	P030AOX12	12
AA030	P030AAX12	12
ACS030	P030ACSX12	12

SE and ES Oil / Water Separator Maintenance Kits

Model	Quantity Required	Part Number
SE2010	1	ESMK1
SE2015	1	ESMK1
SE2030/SE2030P	2	ESMK1
ES36	1	ESMK1
ES90	1	ESMK1
ES125	1	ESMK2
ES250	2	ESMK2
ES500	1	ESMK3
ES1000	2	ESMK3

PCO2 MKI Maintenance Kits

Product Type	Model	Filter Type	Maintenance Kit
Maxi PCO2	PCO2-1- 20 (300)	OIL-Xplus	MAKPCO2-1-20
Maxi PCO2	PCO2-2-20 (300)	OIL-Xplus	MAKPC02-2-20
Maxi PCO2	PCO2-3-20 (300)	OIL-Xplus	MAKPC02-3-20
Maxi PCO2	MPlus 4000 20 (300)	OIL-Xplus	MAK-MPLUS4000-20
Maxi PCO2	MPlus 6000 20 (300)	OIL-Xplus	MAK-MPLUS6000-20
Maxi PCO2	MPlus 8000 20 (300)	OIL-Xplus	MAK-MPLUS8000-20
Maxi PCO2	MPlus 10000 20 (300)	OIL-Xplus	MAK-MPLUS10000-20
Mplus PCO2	PCO2-0-20 (300)	OIL-X EVOLUTION	MAKEPC02-0-20
Mplus PCO2	PCO2-1-20 (300)	OIL-X EVOLUTION	MAKEPC02-1-20
Mplus PCO2	PCO2-2-20 (300)	OIL-X EVOLUTION	MAKEPC02-2-20
Mplus PCO2	PCO2-3-20 (300)	OIL-X EVOLUTION	MAKEPC02-3-20
Mplus PCO2	MPlus 4000 20 (300)	OIL-X EVOLUTION	MAKE-MPLUS4000-20
Mplus PCO2	MPlus 6000 20 (300)	OIL-X EVOLUTION	MAKE-MPLUS6000-20
Mplus PCO2	MPlus 8000 20 (300)	OIL-X EVOLUTION	MAKE-MPLUS8000-20
Mplus PCO2	MPlus 10000 20 (300)	OIL-X EVOLUTION	MAKE-MPLUS10000-20
Maxi PCO2	PCO2-0-24 (350)	OIL-Xplus	MAKPCO2-0-24
Maxi PCO2	PCO2-1-24 (350)	OIL-Xplus	MAKPCO2-1-24
Maxi PCO2	PCO2-2-24 (350)	OIL-Xplus	MAKPC02-2-24
Maxi PCO2	PCO2-3-24 (350)	OIL-Xplus	MAKPC02-3-24
Maxi PCO2	MPlus 4000 24 (350)	OIL-Xplus	MAK-MPLUS4000-24
Maxi PCO2	MPlus 6000 24 (350)	OIL-Xplus	MAK-MPLUS6000-24
Maxi PCO2	MPlus 8000 24 (350)	OIL-Xplus	MAK-MPLUS8000-24
Maxi PCO2	MPlus 10000 24 (350)	OIL-Xplus	MAK-MPLUS10000-20

Replacement Filter Elements
For Legacy Parker Zander Products

G Elements

Filter Model	Replacement Element
GH2A	1030A
GH2V	1030ZP
GH2XP	1030XP
G2ZP	1030ZP
G3A	1050A
G3V	1050ZP
G3XP	1050XP
G3ZP	1050ZP
G5A	1070A
G5V	1070ZP
G5XP	1070XP
G5ZP	1070ZP
G7A	1140A
G7V	1140ZP
G7XP	1140XP
G7ZP	1140ZP
G9A	2010A
G9V	2010ZP
G9XP	2010XP
G9ZP	2010ZP
G11A	2020A
G11V	2020ZP
G11XP	2020XP
G11ZP	2020ZP
G12A	2030A
G12V	2030ZP
G12XP	2030XP
G12ZP	2030ZP
G13A	2050A
G13V	2050ZP
G13XP	2050XP
G13ZP	2050ZP
G14A	3050A
G14V	3050ZP
G14XP	3050XP
G14ZP	3050ZP
G17A	3075A
G17V	3075ZP
G17XP	3075XP
G17ZP	3075ZP
G18A	5060A
G18V	5060ZP
G18XP	5060XP
G18ZP	5060ZP
G19A	5075A
G19V	5075ZP
G19XP	5075XP
G19ZP	5075ZP

GL and GL Plus Elements

Filter Model	Replacement Element
GL2A / GL2AP	CP1008A
GL2VL	CP1008ZL
GL2ZL / GL2ZLP	CP1008ZL
GL2XL / GL2XLP	CP1008XL
GL3A / GL3AP	CP2010A
GL3VL	CP2010ZL
GL3ZL / GL3ZLP	CP2010ZL
GL3XL / GL3XLP	CP2010XL
GL7A / GL7AP	CP2020A
GL7VL	CP2020ZL
GL7ZL / GL7ZLP	CP2020ZL
GL7XL / GL7XLP	CP2020XL
GL9A / GL9AP	CP3025A
GL9VL	CP3025ZL
GL9ZL / GL9ZLP	CP3025ZL
GL9XL / GL9XLP	CP3025XL
GL11A / GL11AP	CP3040A
GL11VL	CP3040ZL
GL11ZL / GL11ZLP	CP3040ZL
GL11XL / GL11XLP	CP3040XL
GL12A / GL12AP	P035ACS
GL12VL	P035AO
GL12ZL / GL12ZLP	P035AO
GL12XL / GL12XLP	P035AA
GL13A / GL13AP	P040ACS
GL13VL	P040AO
GL13ZL / GL13ZLP	P040AO
GL13XL / GL13XLP	P040AA
GL14A / GL14AP	P045ACS
GL14VL	P045AO
GL14ZL / GL14ZLP	P045AO
GL14XL / GL14XLP	P045AA
GL17A / GL17AP	P050ACS
GL17VL	P050AO
GL17ZL / GL17ZLP	P050AO
GL17XL / GL17XLP	P050AA
GL19A / GL19AP	P055ACS
GL19VL	P055AO
GL19ZL / GL19ZLP	P055AO
GL19XL / GL19XLP	P055AA

LV Series Paint Compatible

Filter Model	Part Number
G2A/LV	1030A/LV
G2XPH/LV	1030XP/LV
G2ZPH/LV	1030ZP/LV
G3A/LV	1050A/LV
G3XPDH/LV	1050XP/LV
G3ZPDH/LV	1050ZP/LV
G5A/LV	1070A/LV
G5XPDH/LV	1070XP/LV
G5ZPDH/LV	1070ZP/LV
G7A/LV	1140A/LV
G7XPDH/LV	1140XP/LV
G7ZPDH/LV	1140ZP/LV
G9A/LV	2010A/LV
G9XPDH/LV	2010XP/LV
G9ZPDH/LV	2010ZP/LV

Authorized Distributor
MONILEK OILFIELD

E: sales@monilek.com
W: www.monilekgroup.com

www.parker.com

Catalogue: CATPRODUCTSGSFE2026-00-EN

© 2026 Parker Hannifin EMEA Sarl. All Rights Reserved.