Authorized Distributor
MONILEK OILFIELD

E: sales@monilek.com
W: www.monilekgroup.com

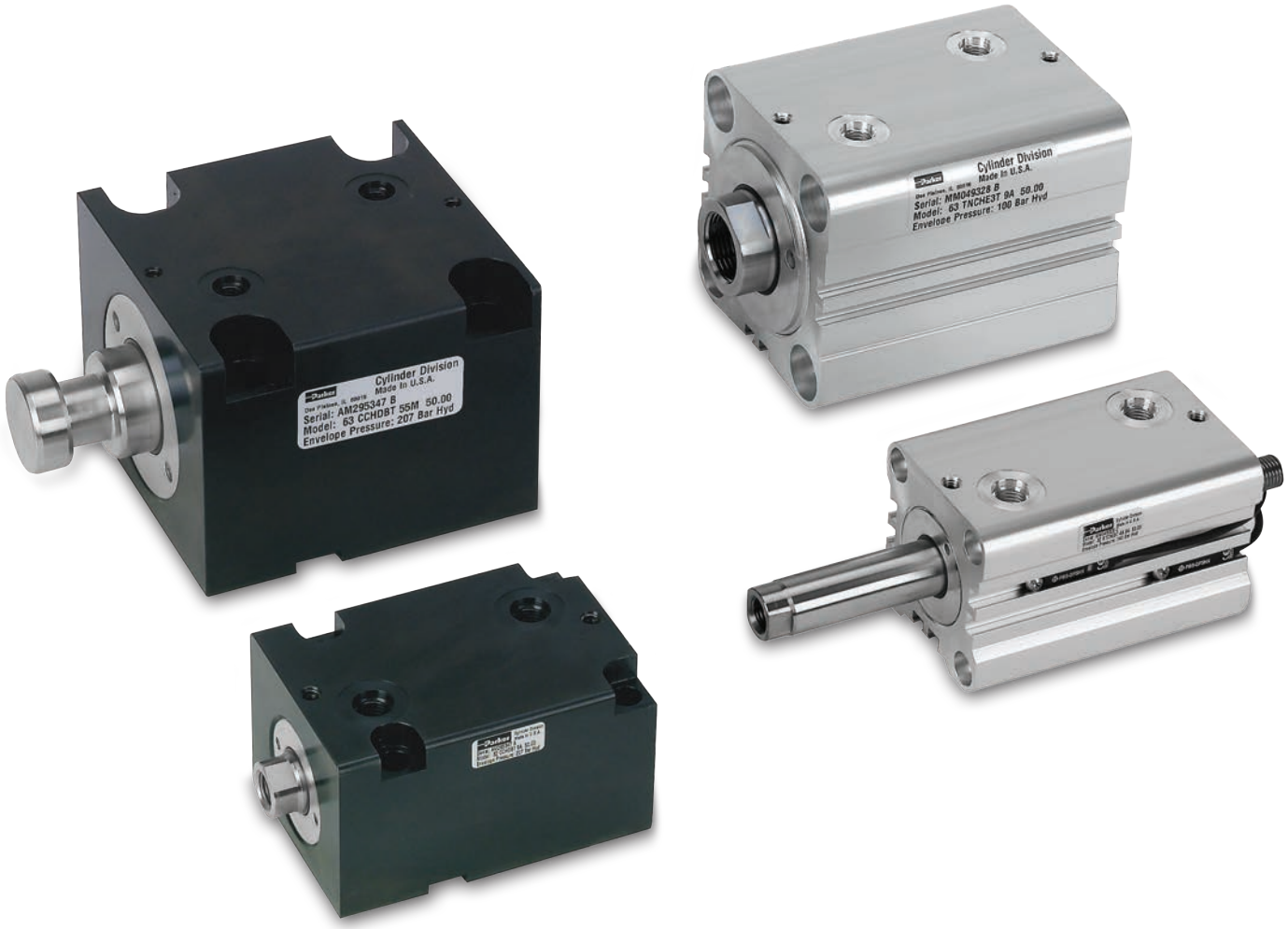

Compact Hydraulic Cylinders

Series CHE / CHD

aerospace
climate control
electromechanical
filtration
fluid & gas handling
hydraulics
pneumatics
process control
sealing & shielding

Parker

Schrader Bellows®

ENGINEERING YOUR SUCCESS.

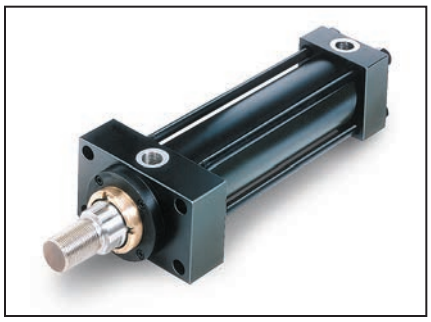

Series HMI
- Bore Sizes 25 through 200mm
- ISO 6020/2 Interchangeable
- 12 Standard Mounting Styles
- 210 Bar Hydraulic Service

Series 3L
- Bore Sizes 1.00" through 8.00"
- Removable Rod Gland
- 15 Standard Mounting Styles
- 1,000 psi Nominal Hydraulic Service

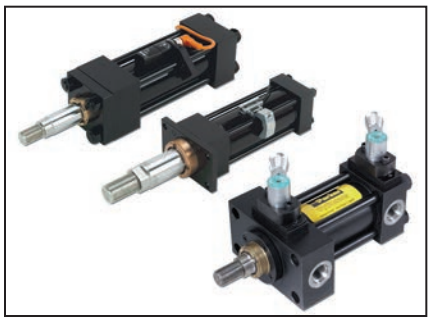

Position Indicating Switches
- Head or cap mounted inductive and magnetic principal switches sense end-of-stroke
- Tie rod mounted switches actuated by a magnetic piston sense mid-stroke
- Available Series 2H, 3L and 2A

In line with our policy of continuing product improvement, specifications and information contained in this catalog are subject to change.

Copyright ©2026 by Parker Hannifin Corporation.
All rights reserved.

PRINTED IN THE U.S.A.

⚠ WARNING

FAILURE OR IMPROPER SELECTION OR IMPROPER USE OF THE PRODUCTS AND/OR SYSTEMS DESCRIBED HEREIN OR RELATED ITEMS CAN CAUSE DEATH, PERSONAL INJURY AND PROPERTY DAMAGE.

This document and other information from the Parker Hannifin Corporation, its subsidiaries and authorized distributors provide product and/or system options for further investigation by users having expertise. It is important that you analyze all aspects of your application, including consequences of any failure and review the information concerning the product or system in the current product catalog. Due to the variety of operating conditions and applications for these products or systems, the user, through its own analysis and testing, is solely responsible for making the final selection of the products and systems and assuring that all performance, safety and warning requirements of the application are met.

The products described herein, including without limitation, product features, specifications, designs, availability and pricing, are subject to change by Parker Hannifin Corporation and its subsidiaries at any time without notice.

Offer of Sale

The items described in this document are hereby offered for sale by Parker Hannifin Corporation, its subsidiaries or its authorized distributors. This offer and its acceptance are governed by provisions stated on a separate page of the document entitled 'Offer of Sale'.

Table of Contents

Description	*Page*	*Section*
Series CHE Aluminum Body Compact Hydraulic Cylinders	**3-19**	CHE
Cylinder Features	3	
Cylinder Weights and Force	4	
Model Code & Standard Specifications	5	
Mounting Styles	6-13	
Global Position Sensing Switches	14	
Solid State Switches/Wiring Connection	15	
Reed Switches/Wiring Connection	16-17	
Switch Mounting / End-of-Stroke Location	18	
Cordsets	19	
Series CHD Steel Body Compact Hydraulic Cylinders	**20-42**	CHD
Cylinder Features	20	
Cylinder Weights and Force	21	
Model Code & Standard Specifications	22	
Mounting Styles	23-40	
End-Of-Stroke Switch – EPS-C	41	
C & CN Mount Manifold Port Interface Machining	42	
Series CHE / CHD	**43-53**	CHE / CHD
Minimum Rod Extension	43	
Cylinder Mounting	44-45	
Parts Identification	46	
Seal Kits/Gland & Cap Spanner Holes	47	
Cylinder Safety Guide	50-51	
Manufacturing Locations	52	
Offer of Sale	53	

Choose Series CHE & CHD Compact Hydraulic Cylinders

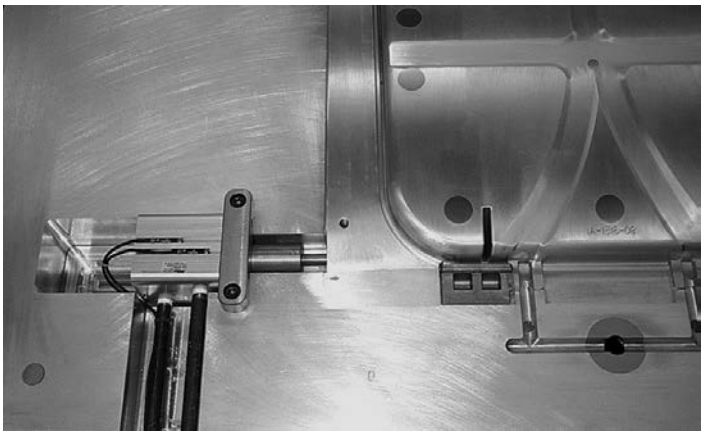

When mounting space is at a premium and the application demands a high force cylinder…

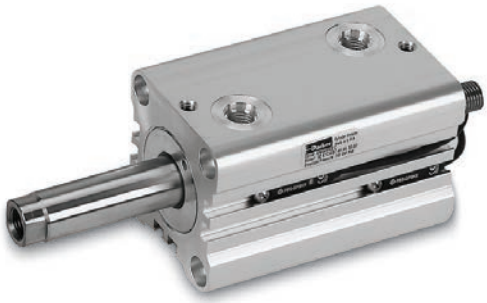

Series CHE is your choice when either End-Of-Stroke, mid-Stroke or continuous cylinder position indication is required and when operating pressures are up to 140 bar (depending on bore size).

Series CHD steel body cylinders are your best choice for high force requirements with operating pressures up to 207 bar. Available foot mounting with manifold ports enhances machine design flexibility. Optional End-Of-Stroke position indication is available.

Series CHE Cylinder Features

Primary Seal – polyurethane rod seal with multiple sealing edges is self-compensating and self relieving to withstand pressure variations and conform to mechanical deflection that may occur.

Piston Rod – Medium carbon steel, hard chrome plated and polished.

Ports – SAE O-ring ports are standard.

OPTIONAL PORTS
NPTF and BSPP ports are also available.

Bi-directional Piston Seal – Polyurethane seal ring with energizer provides leak-free performance.

Secondary Seal – Rod Wiper – wipes clean any oil film adhering to the rod on the extend stroke and cleans the rod on the return stroke.

Non-Metallic Wear Band – improves resistance to bearing loads and provides support for magnet.

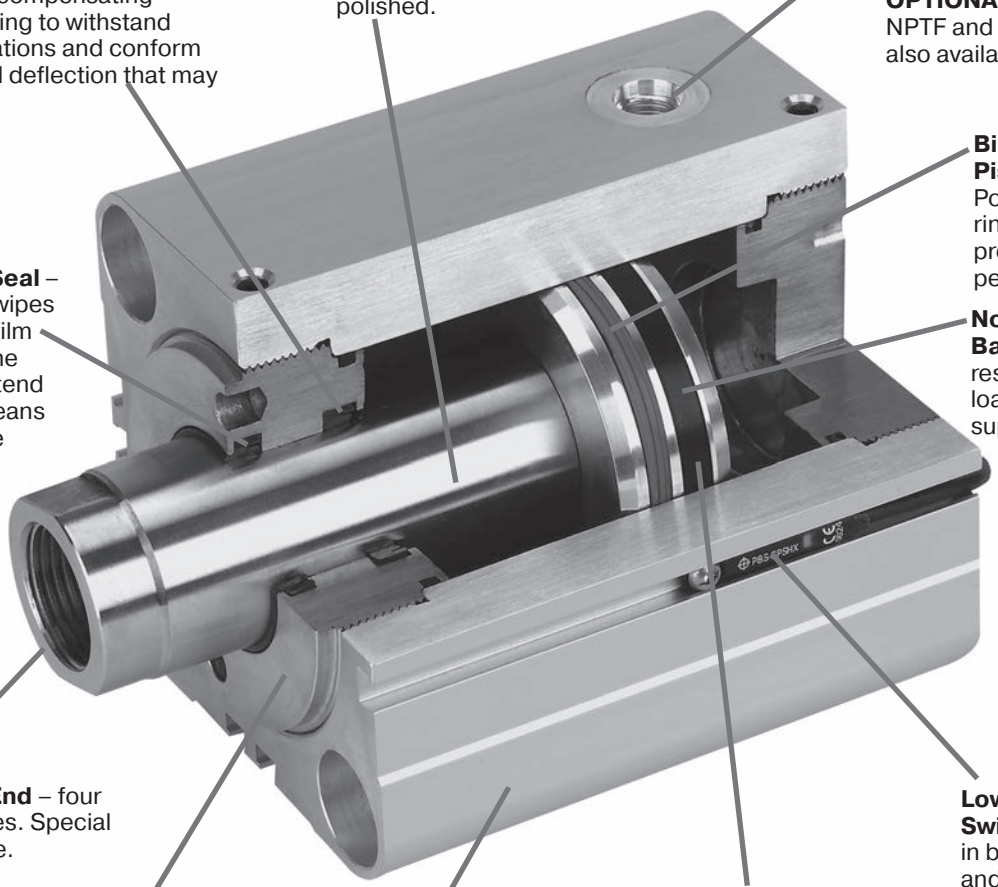

Piston Rod End – four standard styles. Special ends available.

Rod Gland – nodular iron bearing with RoHS compliant zinc plating for corrosion resistance. Optional pilot gland (shown) available at no additional cost.

Cylinder Body – corrosion resistant aluminum alloy. Hard anodized I.D for long wear. Sensor mounting grooves on three sides.

Magnetic Piston Option – for solid state or reed switch actuation.

Low Profile Switches – mount in body grooves and do not extend beyond the cylinder envelope.

CHE Compact Hydraulic Cylinders…

have a lower profile than tie rod construction cylinders with switches installed.

CHE offers mid-stroke piston sensing

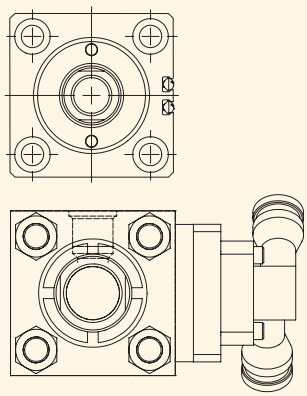

Optional Pilot Gland…

offers added bearing area to increase service life and also improves alignment of cylinder and load.

Standard Gland **Pilot Gland**

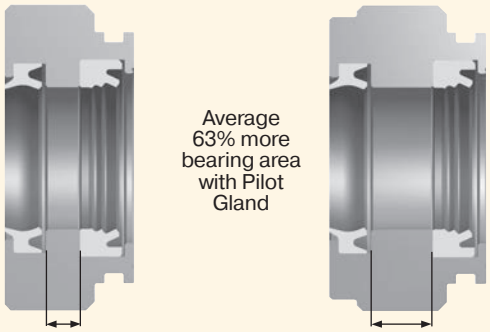

(18mm rod glands depicted)

Use pilot cap to improve alignment for rear mount applications

Theoretical Push and Pull Forces

The cylinder output forces are derived from the formula:

$$F = \frac{P \times A}{10000}$$

Where F = Force in kN.
P = Pressure at the cylinder in bar.
A = Effective area of cylinder piston in square mm.

To determine the bore size for the application take the following steps.

1. Select the Operating Pressure column closest to that desired.
2. In the same column, identify the force required to move the load (always rounding up). If the piston rod is in compression use the 'Push' row and if the piston rod is in tension use the 'Pull' row.
3. In the row to the left is the bore required.

If the cylinder envelope dimensions are too large for the application, increase the operating pressure to the maximum pressure in the table below, if possible, and repeat steps 1 - 3.

Push and Pull Force in kN

Bore Ø	Rod Ø	Operating Direction	Piston Area (mm²)	Operating Pressure (Bar) 20	40	60	80	100	120	140
20	12	Push	314	0.63	1.26	1.88	2.51	3.14	3.77	4.40
		Pull	201	0.40	0.80	1.21	1.61	2.01	2.41	2.81
25	14	Push	491	0.98	1.96	2.95	3.93	4.91	5.89	6.87
		Pull	337	0.67	1.35	2.02	2.70	3.37	4.04	4.72
32	18	Push	804	1.61	3.22	4.83	6.43	8.04	9.65	11.3
		Pull	550	1.10	2.20	3.30	4.40	5.50	6.60	7.70
40	22	Push	1,257	2.51	5.03	7.54	10.1	12.6	15.1	17.6
		Pull	877	1.75	3.51	5.26	7.01	8.77	10.5	12.3
50	28	Push	1,963	3.93	7.85	11.8	15.7	19.6	23.6	-
		Pull	1,348	2.70	5.39	8.09	10.8	13.5	16.2	-
63	36	Push	3,117	6.23	12.5	18.7	24.9	31.2	-	-
		Pull	2,099	4.20	8.40	12.6	16.8	21.0	-	-
80	45	Push	5,027	10.1	20.1	30.2	40.2	50.3	-	-
		Pull	3,436	6.87	13.7	20.6	27.5	34.4	-	-
100	56	Push	7,854	15.7	31.4	47.1	62.8	78.5	-	-
		Pull	5,391	10.8	21.6	32.3	43.1	53.9	-	-

Series CHE Pressure Rating

Bore Ø	Maximum Working Pressure in bar
20	140
25	140
32	140
40	140
50	120
63	100
80	100
100	100

Equivalents

1 kN = 224.81 pounds force
1 bar = 14.50 psi
1 mm = .03937 inch
1 mm² = .00155 inch²

Cylinder Weights

To determine the weight of a Series CHE cylinder, first select the proper basic zero stroke weight for the mounting required, and then calculate the weight of the cylinder stroke and add the result to the basic weight. For extra rod extension, use piston rod weights per mm in Table C.

Table A Single Rod End CHE Cylinder Weights in kg.

Bore Ø	Rod Ø	Single Rod Cylinders: Basic Weight at Zero Stroke, T, PC 3[1]	T, PC B[1]	TN, TR, PC 3[1]	TN, TR, PC B[1]	Per mm Stroke	Basic Weight at Zero Stroke, J, H, PC 3[1]	J, H, PC B[1]	CA, PC 3[1]	CA, PC B[1]	Per mm Stroke
20	12	0.24	0.25	0.25	0.26	0.004	0.51	0.52	0.48	0.49	0.005
25	14	0.34	0.36	0.35	0.37	0.005	0.71	0.73	0.69	0.71	0.006
32	18	0.62	0.66	0.64	0.68	0.009	1.14	1.18	1.28	1.33	0.009
40	22	0.92	0.99	0.95	1.02	0.011	1.86	1.93	2.00	2.06	0.013
50	28	1.38	1.50	1.44	1.55	0.015	2.97	3.09	3.12	3.24	0.017
63	36	2.33	2.54	2.42	2.62	0.021	4.33	4.54	5.14	5.34	0.025
80	45	4.20	4.66	4.34	4.80	0.031	7.68	8.14	8.67	9.13	0.036
100	56	8.02	8.86	8.23	9.08	0.045	14.7	15.6	15.6	16.4	0.051

Table C Piston rod weights in kg.

Rod Ø	Piston Rod Weight per mm
12	0.001
14	0.001
18	0.002
22	0.003
28	0.005
36	0.008
45	0.012
56	0.019

Table B Double Rod End CHE Cylinder Weights in kg.

Bore Ø	Rod Ø	Double Rod Cylinders: Basic Weight at Zero Stroke, T, PC 3[1]	T, PC B[1]	TN, PC 3[1]	TN, PC B[1]	Per mm Stroke	Basic Weight at Zero Stroke, J, PC 3[1]	J, PC B[1]	CA, PC 3[1]	CA, PC B[1]	Per mm Stroke
20	12	0.26	0.28	0.28	0.29	0.005	0.53	0.55	0.50	0.51	0.006
25	14	0.37	0.40	0.39	0.41	0.007	0.75	0.77	0.72	0.75	0.008
32	18	0.68	0.72	0.71	0.75	0.011	1.21	1.25	1.35	1.39	0.011
40	22	1.02	1.09	1.06	1.13	0.014	1.97	2.04	2.10	2.17	0.016
50	28	1.59	1.70	1.64	1.75	0.020	3.18	3.29	3.33	3.44	0.022
63	36	2.75	2.95	2.84	3.04	0.029	4.75	4.95	5.56	5.76	0.033
80	45	5.00	5.45	5.14	5.59	0.043	8.48	8.93	9.47	9.92	0.048
100	56	9.64	10.5	9.86	10.7	0.065	16.3	17.2	17.2	18.1	0.071

Equivalent

1 kg = 2.2046 pounds

Note 1: PC 3 = with Piston Code 3 or 5 (Magnetic Piston), PC B = with Piston Code 9 or B (Non-Magnet Piston)

Model Ordering Code for CHE

32		T	CHE	3	T			9		A	25
Bore Dia.	**Double Rod Cylinder**	**Mounting Style**	**Series**	**Piston**	**Ports**	**Seals**	**Special Modification**	**Piston Rod Thread Style**	**Piston Rod Thread Style** (For Dbl. Rod)	**Piston Rod Thread Type**	**Stroke**
Specify: (Bore dia. in mm) 20 25 32 40 50 63 80 100	Use "K" only if double rod cylinder is required.	Specify: T = Std. Mount TN = Std. Mount with pilot gland TR = Std. Mount with cap pilot CA = Side Lug Mount J = Head Rectangular Flange H = Cap Rectangular Flange	CHE	Specify: 3 = Magnetic piston[1] 5 = Magnetic piston with bronze cap & gland[2] 9 = Non-magnetic piston with bronze cap, & gland B = Non-magnetic piston.	Specify: T = SAE Ports U = NPTF Ports R = BSPP Ports	Leave blank for std. Nitrile Seals 2 = Water Base Fluid Seals V = Fluoro-carbon	Use "S" for Special Modification other than rod end, and specify modification.	Specify: 4 = Small Male 8 = Intermediate Male 9 = Female 55 = Flange Coupler 3 = Special[3]	Specify: 4 = Small Male 8 = Intermediate Male 9 = Female 55 = Flange Coupler 3 = Special[3]	Specify: A = Imperial (UNF or UNC) M = Metric[4]	Specify Stroke Length Required in mm[5].

Shaded boxes identify required model number fields.

[1] Order required Solid State or Reed Switches as separate items. See reed switch & solid state switch pages for specifications and part numbers.

[2] Bronze cap and gland required for CPS linear cylinder position sensor (must be ordered separately).

[3] To order thread style 3, specify "3" and give the desired dimensions for KK, A, and W (or WP or WR depending on mounting) or furnish a dimensioned sketch.

[4] Always use M for rod style 55.

[5] See Maximum Stroke chart at right.

Maximum Stroke

Bore Ø	Stroke[6] in mm	
	Mounting Styles T, TN, TR	Bolt-on Mounting Styles[7] J, H & CA
20	100	50
25	100	75
32	150	100
40	150	100
50	150	100
63	165	100
80	165	100
100	125	100

[6] Intermediate strokes in 1mm increments are available.

[7] Longer strokes (up to maximum lengths for Mounting Styles T, TN & TR) are available at increased manufacturing lead times. Contact the factory.

Standard Specifications

- 6 Standard mounting styles
- Bore sizes – 20mm to 100mm
- Piston Rod Diameter – 12mm to 56mm
- Single and double rod construction available
- Strokes up to 150mm depending on bore size (see table above).
- Working pressure up to 140 bar (depending on bore size)
- Temperature range – -23°C to +121°C (depending on seal class)
- Reference ISO 16656: 2004

Seal Classes	Typical Fluids	Temperature Range
1 – Standard Nitrile & Polyurethane	Hydraulic Oil, MIL-H-5606 Oil	-23°C (-10°F) to +100°C (+212°F)
2 – Optional Water Base Fluid Seal	Water-in-Oil Emulsion – Houghto-Safe 271, 620, 5040. Mobil Pyrogard D. Shell Irus 905. Ucon Hydrolube J-4	-23°C (-10°F) to +121°C (+250°F)
5 – Optional (at extra cost) Fluorocarbon Seals	High Temperature	-23°C (-10°F) to +121°C (+250°F) Class 5 seals may be operated up to +204°C (+400°F) with reduced service life

Note: Class 5 seals are not suitable for use with Skydrol fluid, but can be used with hydraulic oil if desired.

Style T Through Bolt Mount – Single Rod End – 20mm to 100mm Bore Size

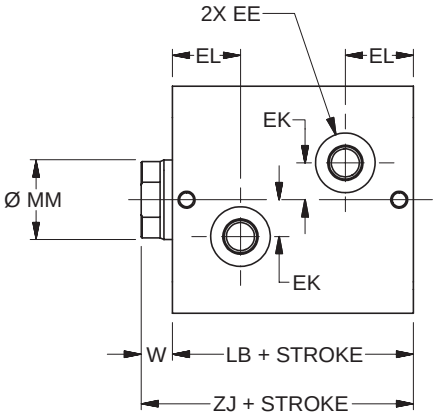

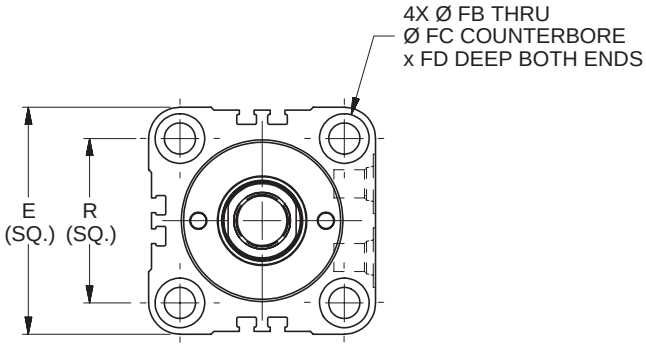

T Mount Single Rod End – Envelope and Mounting Dimensions

Bore Ø	E	EE			EK	EL	FB Ø	FC Ø	FD	R	W	Add Stroke	
		SAE	NPTF	BSP								LB	ZJ
20	43[1]	#2[2]	1/8	G-1/8	6	16.5	5.5	9.5	5.4	30	8	43	51
25	49	#2[2]	1/8	G-1/8	8	17.5	5.5	9.5	5.4	36	8	45	53
32	62	#4	1/4	G-1/4	11	20.5	7	11	6.5	47	10	51	61
40	70	#4	1/4	G-1/4	12	21	9	14	8.6	52	10	55	65
50	80	#4	1/4	G-1/4	14	22.5	11	17.5	10.8	58	11	60	71
63	94	#4	1/4	G-1/4	17	26	13.5	20	13	69	13	67	80
80	114	#6	3/8	G-3/8	20	29.5	16	23	15.2	86	17	78	95
100	138	#6	3/8	G-3/8	25	35	18	26	17.5	106	26	96	122

[1] Port face on 20mm bore is extended 2mm. See port face extension drawing.

[2] Parker Triple-Lok™ Straight Thread Connector SAE #2 to ¼" 37° flare can be used when this port thread is required. Contact your local Parker Tube Fitting distributor and specify part number 4-2 F5OX.

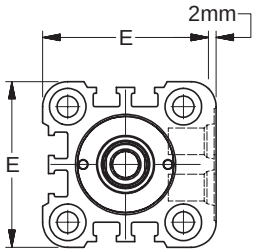

Port Face Extension 20mm Bore Only

T Mount Single Rod End – Rod Dimensions

Bore Ø	MM Rod Ø	Rod End														Rod Extension Dimensions		
		Style 9M		Style 4M		Style 9A		Style 4A		Style 8A		Style 55M						
		KK	A	KK	A	KK	A	KK	A	CC	A	AD	AE	AF	AM	C	D	NA
20	12	M8x1.25	10	M8x1	14	5/16-24	10	5/16-24	14	3/8-24	16	8	3	6	11	6	10	11
25	14	M10x1.5	12	M10x1.25	16	3/8-24	12	3/8-24	16	1/2-20	18	12	4	8	13	6	12	13
32	18	M12x1.75	15	M12x1.25	18	7/16-20	15	7/16-20	18	9/16-18	25	16	6	10	16	8	15	17
40	22	M16x2	20	M16x1.5	22	5/8-18	20	5/8-18	22	3/4-16	30	20	8	12	20	8	19	21
50	28	M20x2.5	24	M20x1.5	28	3/4-16	24	3/4-16	28	7/8-14	35	24	10	16	25	9	24	27
63	36	M27x3	30	M27x2	36	1-14	30	1-14	36	1 1/4-12	45	28	12	22	33	11	32	35
80	45	M33x3.5	35	M33x2	45	1 1/4-12	35	1 1/4-12	45	1 1/2-12	56	34	14	28	41	13	39	43
100	56	M42x4.5	45	M42x2	56	1 1/2-12	45	1 1/2-12	56	1 3/4-12	70	42	16	35	52	22	48	54

Rod End Dimensions

Thread Style 4

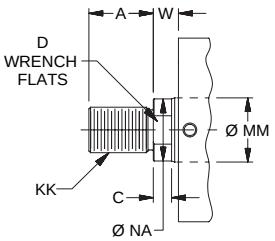

Thread Style 8

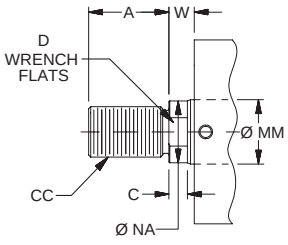

Thread Style 9

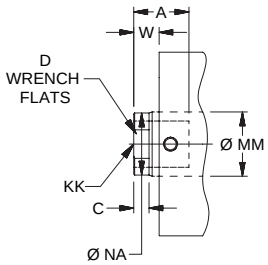

Style 55

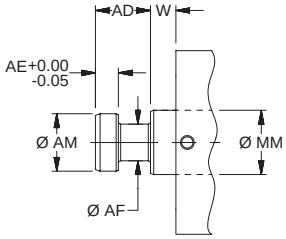

Style T Through Bolt Mount – Double Rod End – 20mm to 100mm Bore Size

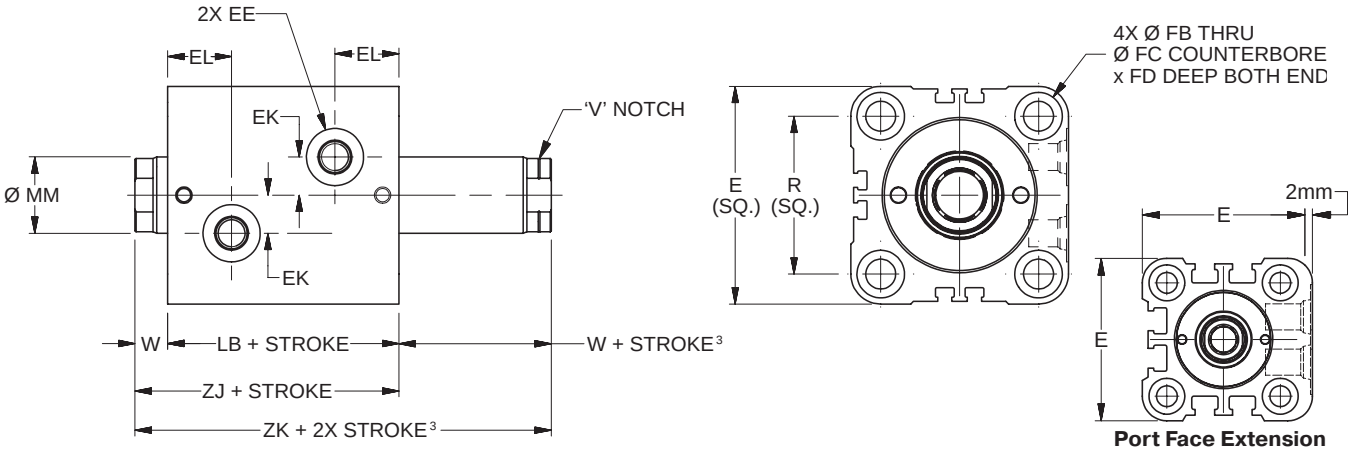

Port Face Extension 20mm Bore Only

T Mount Double Rod End – Envelope and Mounting Dimensions

Bore Ø	E	EE			EK	EL	FB Ø	FC Ø	FD	LB	R	W[3]	Add Stroke		Add 2X Stroke
		SAE	NPTF	BSP									LB	ZJ	ZK[3]
20	43[1]	#2[2]	1/8	G-1/8	6	16.5	5.5	9.5	5.4	43	30	8	43	51	59
25	49	#2[2]	1/8	G-1/8	8	17.5	5.5	9.5	5.4	45	36	8	45	53	61
32	62	#4	1/4	G-1/4	11	20.5	7	11	6.5	51	47	10	51	61	71
40	70	#4	1/4	G-1/4	12	21	9	14	8.6	55	52	10	55	65	75
50	80	#4	1/4	G-1/4	14	22.5	11	17.5	10.8	60	58	11	60	71	82
63	94	#4	1/4	G-1/4	17	26	13.5	20	13	67	69	13	67	80	93
80	114	#6	3/8	G-3/8	20	29.5	16	23	15.2	78	86	17	78	95	112
100	138	#6	3/8	G-3/8	25	35	18	26	17.5	96	106	26	96	122	148

[1] Port face on 20mm bore is extended 2mm. See port face extension drawing.
[2] Parker Triple-Lok™ Straight Thread Connector SAE #2 to ¼" 37° flare can be used when this port thread is required. Contact your local Parker Tube Fitting distributor and specify part number 4-2 F5OX.
[3] Minimum 'W + Stroke' on V notch rod side may apply. See minimum rod extension page for details.

T Mount Double Rod End – Rod Dimensions

Bore Ø	MM Rod Ø	Rod End														Rod Extension Dimensions		
		Style 9M[3]		Style 4M		Style 9A[3]		Style 4A		Style 8A		Style 55M						
		KK	A	KK	A	KK	A	KK	A	CC	A	AD	AE	AF	AM	C	D	NA
20	12	M8x1.25	10	M8x1	14	5/16-24	10	5/16-24	14	3/8-24	16	8	3	6	11	6	10	11
25	14	M10x1.5	12	M10x1.25	16	3/8-24	12	3/8-24	16	1/2-20	18	12	4	8	13	6	12	13
32	18	M12x1.75	15	M12x1.25	18	7/16-20	15	7/16-20	18	9/16-18	25	16	6	10	16	8	15	17
40	22	M16x2	20	M16x1.5	22	5/8-18	20	5/8-18	22	3/4-16	30	20	8	12	20	8	19	21
50	28	M20x2.5	24	M20x1.5	28	3/4-16	24	3/4-16	28	7/8-14	35	24	10	16	25	9	24	27
63	36	M27x3	30	M27x2	36	1-14	30	1-14	36	1 1/4-12	45	28	12	22	33	11	32	35
80	45	M33x3.5	35	M33x2	45	1 1/4-12	35	1 1/4-12	45	1 1/2-12	56	34	14	28	41	13	39	43
100	56	M42x4.5	45	M42x2	56	1 1/2-12	45	1 1/2-12	56	1 3/4-12	70	42	16	35	52	22	48	54

Rod End Dimensions

Thread Style 4

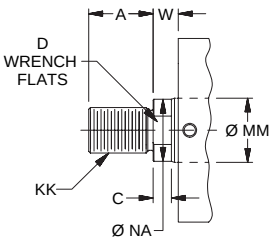

Thread Style 8

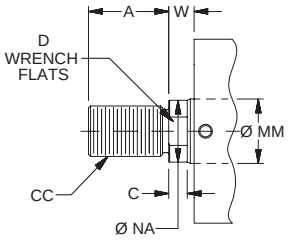

Thread Style 9

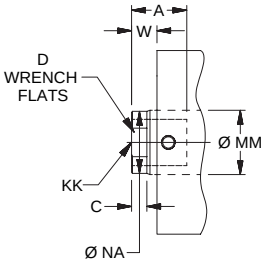

Style 55

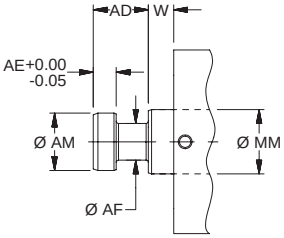

"Special" Thread Style 3

Special thread, extension, rod eye, blank, etc. are also available.

To order, specify "Style 3" and give desired dimensions for KK, A, & W. If otherwise special furnish dimensional sketch.

Styles TN and TR Through Bolt Mount with Pilot Gland or Pilot Cap – Single Rod End – 20mm to 100mm Bore Size

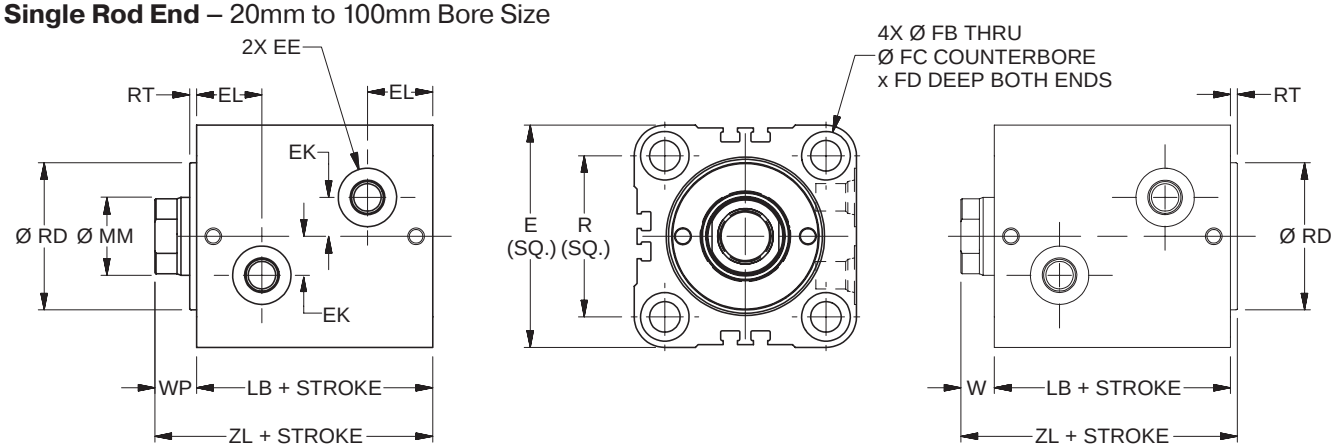

Style TN Pilot Gland Mount **Style TR Pilot Cap Mount**

TN and TR Mount Single Rod End – Envelope and Mounting Dimensions

Bore Ø	E	EE			EK	EL	FB Ø	FC Ø	FD	R	RD Ø f9	RT	W	WP	Add Stroke	
		SAE	NPTF	BSP											LB	ZL
20	43[1]	#2[2]	1/8	G-1/8	6	16.5	5.5	9.5	5.4	30	24	3	8	11	43	54
25	49	#2[2]	1/8	G-1/8	8	17.5	5.5	9.5	5.4	36	27	3	8	11	45	56
32	62	#4	1/4	G-1/4	11	20.5	7	11	6.5	47	36	3	10	13	51	64
40	70	#4	1/4	G-1/4	12	21	9	14	8.6	52	43	3	10	13	55	68
50	80	#4	1/4	G-1/4	14	22.5	11	17.5	10.8	58	53	3	11	14	60	74
63	94	#4	1/4	G-1/4	17	26	13.5	20	13	69	66	3	13	16	67	83
80	114	#6	3/8	G-3/8	20	29.5	16	23	15.2	86	83	3	17	20	78	98
100	138	#6	3/8	G-3/8	25	35	18	26	17.5	106	103	3	26	29	96	125

[1] Port face on 20mm bore is extended 2mm. See port face extension drawing on T Mount page.

[2] Parker Triple-Lok™ Straight Thread Connector SAE #2 to ¼" 37° flare can be used when this port thread is required. Contact your local Parker Tube Fitting distributor and specify part number 4-2 F5OX.

TN and TR Mount Single Rod End – Rod Dimensions

Bore Ø	MM Rod Ø	Rod End														Rod Extension Dimensions		
		Style 9M		Style 4M		Style 9A		Style 4A		Style 8A		Style 55M						
		KK	A	KK	A	KK	A	KK	A	CC	A	AD	AE	AF	AM	C	D	NA
20	12	M8x1.25	10	M8x1	14	5/16-24	10	5/16-24	14	3/8-24	16	8	3	6	11	6	10	11
25	14	M10x1.5	12	M10x1.25	16	3/8-24	12	3/8-24	16	1/2-20	18	12	4	8	13	6	12	13
32	18	M12x1.75	15	M12x1.25	18	7/16-20	15	7/16-20	18	9/16-18	25	16	6	10	16	8	15	17
40	22	M16x2	20	M16x1.5	22	5/8-18	20	5/8-18	22	3/4-16	30	20	8	12	20	8	19	21
50	28	M20x2.5	24	M20x1.5	28	3/4-16	24	3/4-16	28	7/8-14	35	24	10	16	25	9	24	27
63	36	M27x3	30	M27x2	36	1-14	30	1-14	36	1 1/4-12	45	28	12	22	33	11	32	35
80	45	M33x3.5	35	M33x2	45	1 1/4-12	35	1 1/4-12	45	1 1/2-12	56	34	14	28	41	13	39	43
100	56	M42x4.5	45	M42x2	56	1 1/2-12	45	1 1/2-12	56	1 3/4-12	70	42	16	35	52	22	48	54

Rod End Dimensions

Thread Style 4

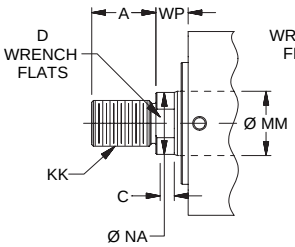

Thread Style 8

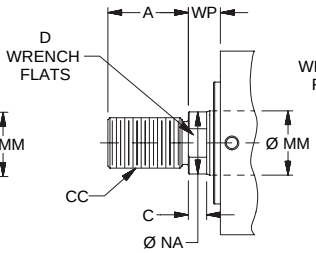

Thread Style 9

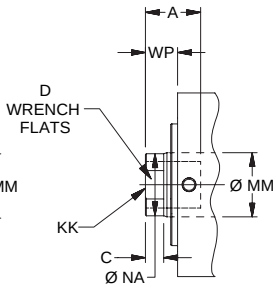

Style 55

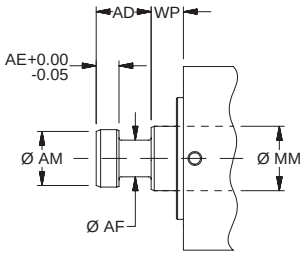

"Special" Thread Style 3

Special thread, extension, rod eye, blank, etc. are also available.

To order, specify "Style 3" and give desired dimensions for KK, A, & W (TR Mount) or WP (TN Mount) If otherwise special furnish dimensional sketch.

Style TN Through Bolt Mount with Pilot Gland – Double Rod End – 20mm to 100mm Bore Size

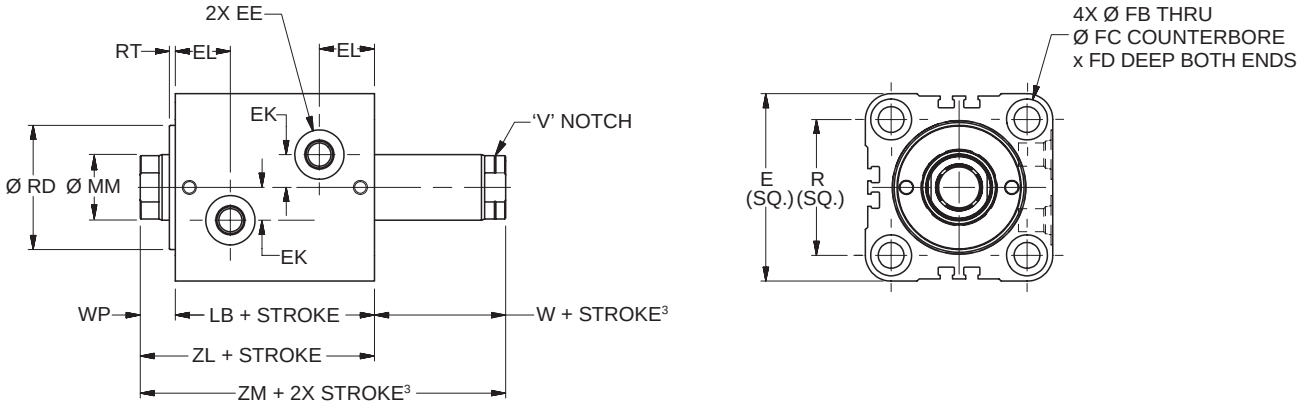

TN Mount Double Rod End – Envelope and Mounting Dimensions

Bore Ø	E	EE			EK	EL	FB Ø	FC Ø	FD	R	RD Ø f9	RT	W[3]	WP	Add Stroke		Add 2X Stroke
		SAE	NPTF	BSP											LB	ZL	ZM[3]
20	43[1]	#2[2]	1/8	G-1/8	6	16.5	5.5	9.5	5.4	30	24	3	8	11	43	54	62
25	49	#2[2]	1/8	G-1/8	8	17.5	5.5	9.5	5.4	36	27	3	8	11	45	56	64
32	62	#4	1/4	G-1/4	11	20.5	7	11	6.5	47	36	3	10	13	51	64	74
40	70	#4	1/4	G-1/4	12	21	9	14	8.6	52	43	3	10	13	55	68	78
50	80	#4	1/4	G-1/4	14	22.5	11	17.5	10.8	58	53	3	11	14	60	74	85
63	94	#4	1/4	G-1/4	17	26	13.5	20	13	69	66	3	13	16	67	83	96
80	114	#6	3/8	G-3/8	20	29.5	16	23	15.2	86	83	3	17	20	78	98	115
100	138	#6	3/8	G-3/8	25	35	18	26	17.5	106	103	3	26	29	96	125	151

[1] Port face on 20mm bore is extended 2mm. See port face extension drawing on T Mount page.

[2] Parker Triple-Lok™ Straight Thread Connector SAE #2 to ¼" 37° flare can be used when this port thread is required. Contact your local Parker Tube Fitting distributor and specify part number 4-2 F5OX.

[3] Minimum 'W + Stroke' on V notch rod side may apply. See minimum rod extension page for details.

TN Mount Double Rod End – Rod Dimensions

Bore Ø	MM Rod Ø	Rod End														Rod Extension Dimensions		
		Style 9M[3]		Style 4M		Style 9A[3]		Style 4A		Style 8A		Style 55M						
		KK	A	KK	A	KK	A	KK	A	CC	A	AD	AE	AF	AM	C	D	NA
20	12	M8x1.25	10	M8x1	14	5/16-24	10	5/16-24	14	3/8-24	16	8	3	6	11	6	10	11
25	14	M10x1.5	12	M10x1.25	16	3/8-24	12	3/8-24	16	1/2-20	18	12	4	8	13	6	12	13
32	18	M12x1.75	15	M12x1.25	18	7/16-20	15	7/16-20	18	9/16-18	25	16	6	10	16	8	15	17
40	22	M16x2	20	M16x1.5	22	5/8-18	20	5/8-18	22	3/4-16	30	20	8	12	20	8	19	21
50	28	M20x2.5	24	M20x1.5	28	3/4-16	24	3/4-16	28	7/8-14	35	24	10	16	25	9	24	27
63	36	M27x3	30	M27x2	36	1-14	30	1-14	36	1 1/4-12	45	28	12	22	33	11	32	35
80	45	M33x3.5	35	M33x2	45	1 1/4-12	35	1 1/4-12	45	1 1/2-12	56	34	14	28	41	13	39	43
100	56	M42x4.5	45	M42x2	56	1 1/2-12	45	1 1/2-12	56	1 3/4-12	70	42	16	35	52	22	48	54

Rod End Dimensions

Thread Style 4

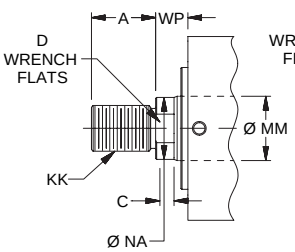

Thread Style 8

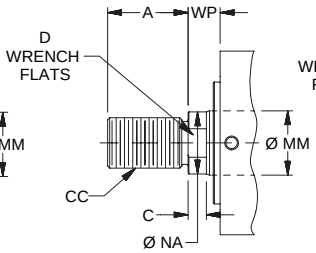

Thread Style 9

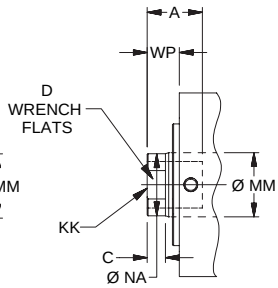

Style 55

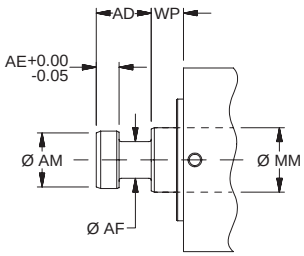

"Special" Thread Style 3

Special thread, extension, rod eye, blank, etc. are also available.

To order, specify "Style 3" and give desired dimensions for KK, A, & WP. If otherwise special furnish dimensional sketch.

Styles J Rectangular Head Flange & H Rectangular Cap Flange Mounts – Single Rod End – 20mm to 100mm Bore Size

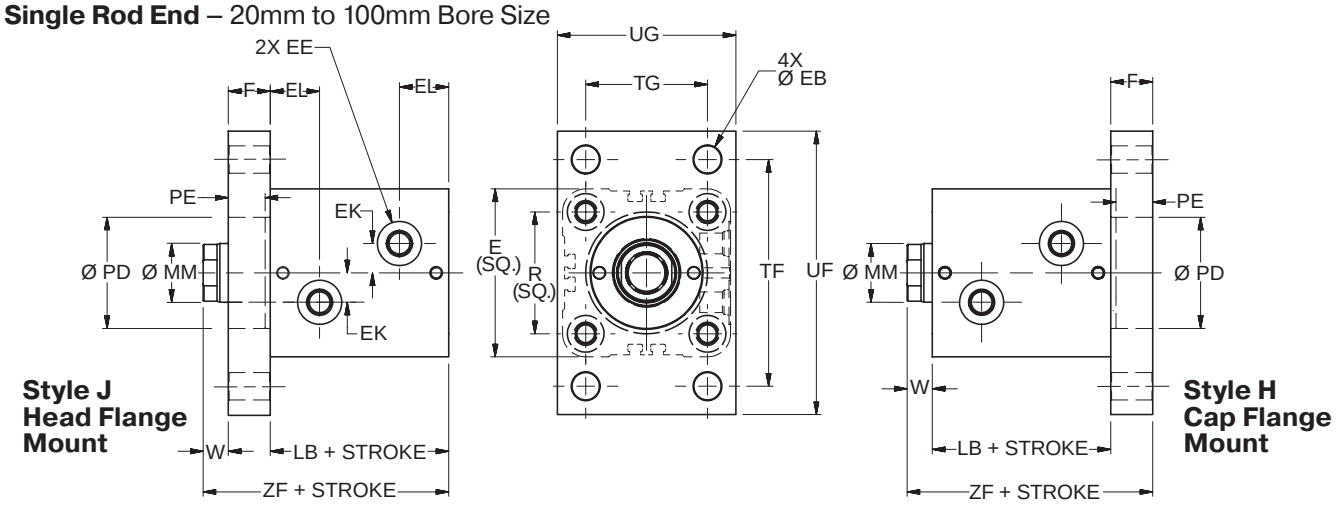

J & H Mounts Single Rod End – Envelope and Mounting Dimensions

Bore Ø	E	EE			EK	EL	F	EB Ø	PD Ø H9	PE	R	TF	TG	UF	UG	W	Add Stroke	
		SAE	NPTF	BSP													LB	ZF
20	43[1]	#2[2]	1/8	G-1/8	6	16.5	10	5.5	24	7	30	60	30	75	46	8	43	61
25	49	#2[2]	1/8	G-1/8	8	17.5	12	5.5	27	9	36	66	36	80	52	8	45	65
32	62	#4	1/4	G-1/4	11	20.5	12	6.8	36	9	47	80	40	95	62	10	51	73
40	70	#4	1/4	G-1/4	12	21	16	11	43	13	52	96	46	118	70	10	55	81
50	80	#4	1/4	G-1/4	14	22.5	20	13.5	53	17	58	108	58	135	85	11	60	91
63	94	#4	1/4	G-1/4	17	26	20	15	66	17	69	124	65	150	98	13	67	100
80	114	#6	3/8	G-3/8	20	29.5	25	17	83	21	86	154	87	185	118	17	78	120
100	138	#6	3/8	G-3/8	25	35	30	21.5	103	27	106	190	109	230	150	26	96	152

[1] Port face on 20mm bore is extended 2mm. See port face extension drawing on T Mount page.

[2] Parker Triple-Lok™ Straight Thread Connector SAE #2 to ¼" 37° flare can be used when this port thread is required. Contact your local Parker Tube Fitting distributor and specify part number 4-2 F5OX.

J & H Mounts Single Rod End – Rod Dimensions

Bore Ø	MM Rod Ø	Rod End														Rod Extension Dimensions		
		Style 9M		Style 4M		Style 9A		Style 4A		Style 8A		Style 55M						
		KK	A	KK	A	KK	A	KK	A	CC	A	AD	AE	AF	AM	C	D	NA
20	12	M8x1.25	10	M8x1	14	5/16-24	10	5/16-24	14	3/8-24	16	8	3	6	11	6	10	11
25	14	M10x1.5	12	M10x1.25	16	3/8-24	12	3/8-24	16	1/2-20	18	12	4	8	13	6	12	13
32	18	M12x1.75	15	M12x1.25	18	7/16-20	15	7/16-20	18	9/16-18	25	16	6	10	16	8	15	17
40	22	M16x2	20	M16x1.5	22	5/8-18	20	5/8-18	22	3/4-16	30	20	8	12	20	8	19	21
50	28	M20x2.5	24	M20x1.5	28	3/4-16	24	3/4-16	28	7/8-14	35	24	10	16	25	9	24	27
63	36	M27x3	30	M27x2	36	1-14	30	1-14	36	1 1/4-12	45	28	12	22	33	11	32	35
80	45	M33x3.5	35	M33x2	45	1 1/4-12	35	1 1/4-12	45	1 1/2-12	56	34	14	28	41	13	39	43
100	56	M42x4.5	45	M42x2	56	1 1/2-12	45	1 1/2-12	56	1 3/4-12	70	42	16	35	52	22	48	54

Rod End Dimensions

Thread Style 4

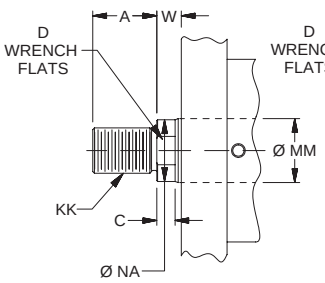

Thread Style 8

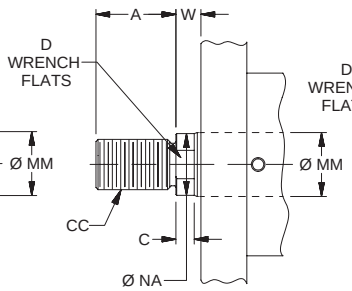

Thread Style 9

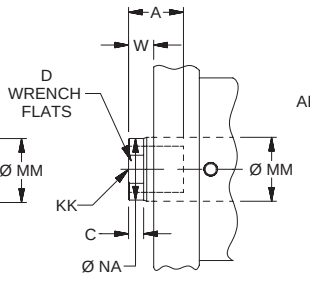

Style 55

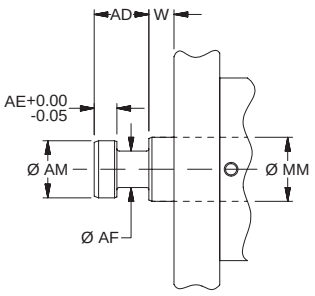

"Special" Thread Style 3

Special thread, extension, rod eye, blank, etc. are also available.

To order, specify "Style 3" and give desired dimensions for KK, A, & W. If otherwise special furnish dimensional sketch.

Style J Rectangular Head Flange Mount – Double Rod End – 20mm to 100mm Bore Size

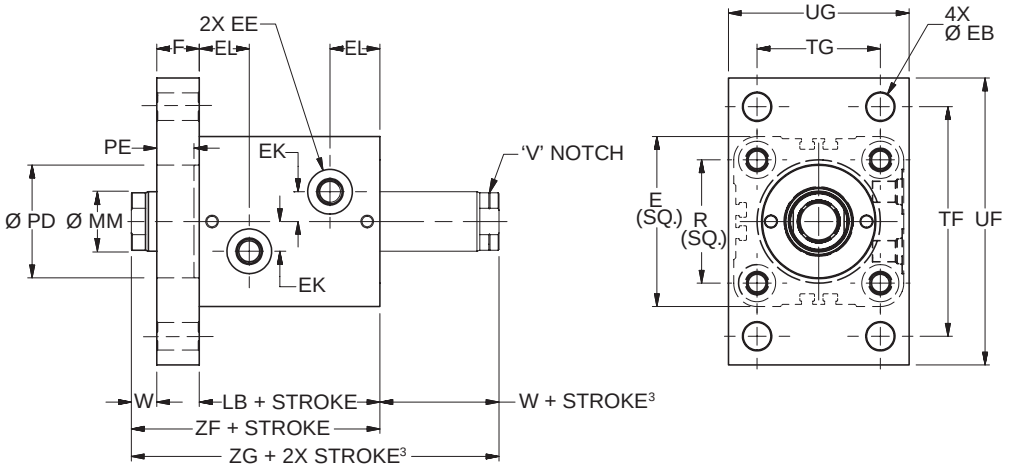

J Mount Double Rod End – Envelope and Mounting Dimensions

Bore Ø	E	EE			EK	EL	F	EB Ø	PD Ø H9	PE	R	TF	TG	UF	UG	W[3]	Add Stroke		Add 2X Stroke
		SAE	NPTF	BSP													LB	ZF	ZG[3]
20	43[1]	#2[2]	1/8	G-1/8	6	16.5	10	5.5	24	7	30	60	30	75	46	8	43	61	69
25	49	#2[2]	1/8	G-1/8	8	17.5	12	5.5	27	9	36	66	36	80	52	8	45	65	73
32	62	#4	1/4	G-1/4	11	20.5	12	6.8	36	9	47	80	40	95	62	10	51	73	83
40	70	#4	1/4	G-1/4	12	21	16	11	43	13	52	96	46	118	70	10	55	81	91
50	80	#4	1/4	G-1/4	14	22.5	20	13.5	53	17	58	108	58	135	85	11	60	91	102
63	94	#4	1/4	G-1/4	17	26	20	15	66	17	69	124	65	150	98	13	67	100	113
80	114	#6	3/8	G-3/8	20	29.5	25	17	83	21	86	154	87	185	118	17	78	120	137
100	138	#6	3/8	G-3/8	25	35	30	21.5	103	27	106	190	109	230	150	26	96	152	178

[1] Port face on 20mm bore is extended 2mm. See port face extension drawing on T Mount page.

[2] Parker Triple-Lok™ Straight Thread Connector SAE #2 to ¼" 37° flare can be used when this port thread is required. Contact your local Parker Tube Fitting distributor and specify part number 4-2 F5OX.

[3] Minimum 'W + Stroke' on V notch rod side may apply. See minimum rod extension page for details.

J Mount Double Rod End – Rod Dimensions

Bore Ø	MM Rod Ø	Rod End														Rod Extension Dimensions		
		Style 9M[3]		Style 4M		Style 9A[3]		Style 4A		Style 8A		Style 55M						
		KK	A	KK	A	KK	A	KK	A	CC	A	AD	AE	AF	AM	C	D	NA
20	12	M8x1.25	10	M8x1	14	5/16-24	10	5/16-24	14	3/8-24	16	8	3	6	11	6	10	11
25	14	M10x1.5	12	M10x1.25	16	3/8-24	12	3/8-24	16	1/2-20	18	12	4	8	13	6	12	13
32	18	M12x1.75	15	M12x1.25	18	7/16-20	15	7/16-20	18	9/16-18	25	16	6	10	16	8	15	17
40	22	M16x2	20	M16x1.5	22	5/8-18	20	5/8-18	22	3/4-16	30	20	8	12	20	8	19	21
50	28	M20x2.5	24	M20x1.5	28	3/4-16	24	3/4-16	28	7/8-14	35	24	10	16	25	9	24	27
63	36	M27x3	30	M27x2	36	1-14	30	1-14	36	1 1/4-12	45	28	12	22	33	11	32	35
80	45	M33x3.5	35	M33x2	45	1 1/4-12	35	1 1/4-12	45	1 1/2-12	56	34	14	28	41	13	39	43
100	56	M42x4.5	45	M42x2	56	1 1/2-12	45	1 1/2-12	56	1 3/4-12	70	42	16	35	52	22	48	54

Rod End Dimensions

Thread Style 4

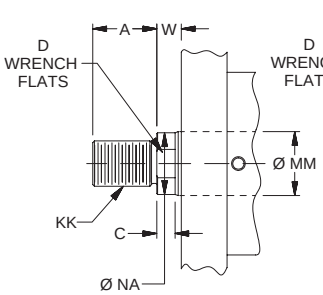

Thread Style 8

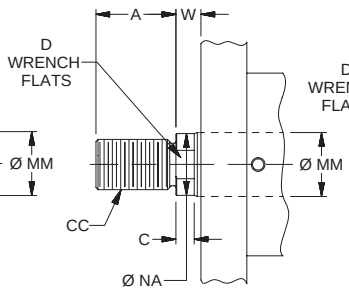

Thread Style 9

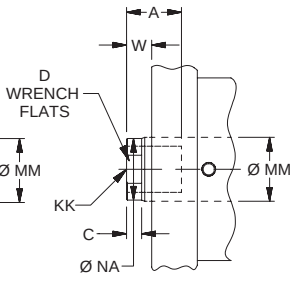

Style 55

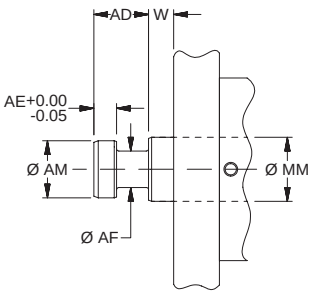

"Special" Thread Style 3

Special thread, extension, rod eye, blank, etc. are also available.

To order, specify "Style 3" and give desired dimensions for KK, A, & W. If otherwise special furnish dimensional sketch.

Style CA Side Lug Mount – Single Rod End – 20mm to 100mm Bore Size

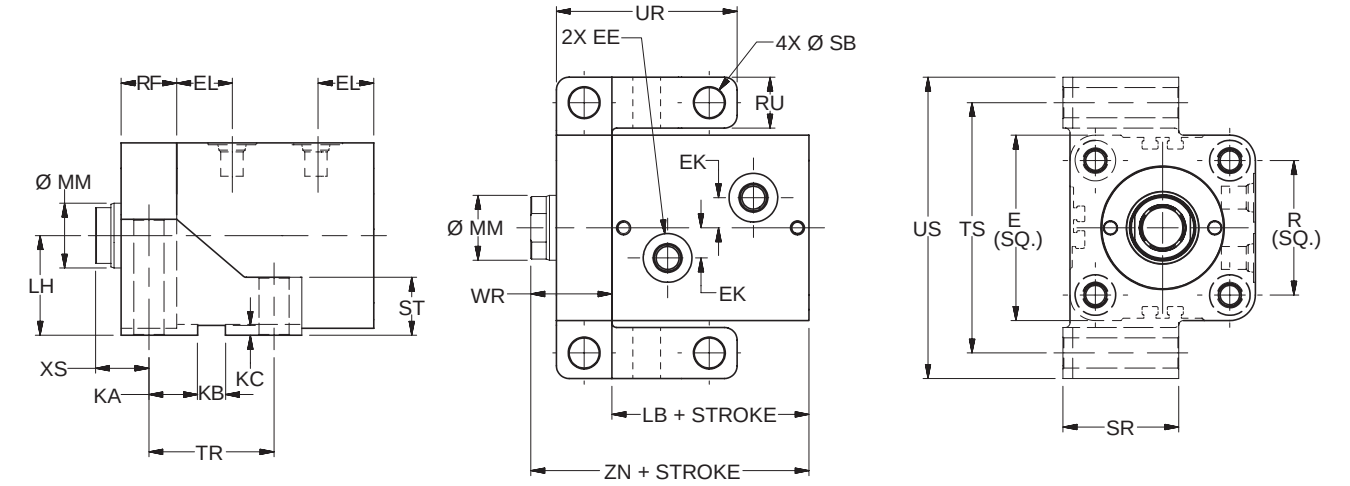

CA Mount Single Rod End – Envelope and Mounting Dimensions

Bore	E	EE			EK	EL	KA	KB	KC	LH	R	RF	RU	SB Ø	SR	ST	TR	TS	UR	US	WR	XS	Add Stroke	
		SAE	NPTF	BSP																			LB	ZN
20	43[1]	#2[2]	1/8	G-1/8	6	16.5	12	5	2.75	24	30	10	10	5.5	25	10	29	58	39	68	18	13	43	61
25	49	#2[2]	1/8	G-1/8	8	17.5	13.5	6	3.25	27	36	12	12	6.8	30	12	33	66	45	78	20	14	45	65
32	62	#4	1/4	G-1/4	11	20.5	16.5	8	3.75	34	47	16	15	9	35	15	41	82	57	97	26	18	51	77
40	70	#4	1/4	G-1/4	12	21	18.5	10	4.25	38	52	20	18	11	40	20	47	94	67	112	30	20	55	85
50	80	#4	1/4	G-1/4	14	22.5	21	12	4.25	43	58	24	22	13.5	50	25	54	108	78	130	35	23	60	95
63	94	#4	1/4	G-1/4	17	26	25	14	4.75	51	69	28	26	16	60	30	64	128	92	154	41	27	67	108
80	114	#6	3/8	G-3/8	20	29.5	30	16	5.25	61	86	32	30	18	70	35	76	152	108	182	49	33	78	127
100	138	#6	3/8	G-3/8	25	35	36.5	20	6.25	75	106	38	36	22	80	40	93	186	131	222	64	45	96	160

[1] Port face on 20mm bore is extended 2mm. See port face extension drawing on T Mount page.

[2] Parker Triple-Lok™ Straight Thread Connector SAE #2 to ¼" 37° flare can be used when this port thread is required. Contact your local Parker Tube Fitting distributor and specify part number 4-2 F5OX.

CA Mount Single Rod End – Rod Dimensions

Bore Ø	MM Rod Ø	Rod End														Rod Extension Dimensions		
		Style 9M		Style 4M		Style 9A		Style 4A		Style 8A		Style 55M						
		KK	A	KK	A	KK	A	KK	A	CC	A	AD	AE	AF	AM	C	D	NA
20	12	M8x1.25	10	M8x1	14	5/16-24	10	5/16-24	14	3/8-24	16	8	3	6	11	6	10	11
25	14	M10x1.5	12	M10x1.25	16	3/8-24	12	3/8-24	16	1/2-20	18	12	4	8	13	6	12	13
32	18	M12x1.75	15	M12x1.25	18	7/16-20	15	7/16-20	18	9/16-18	25	16	6	10	16	8	15	17
40	22	M16x2	20	M16x1.5	22	5/8-18	20	5/8-18	22	3/4-16	30	20	8	12	20	8	19	21
50	28	M20x2.5	24	M20x1.5	28	3/4-16	24	3/4-16	28	7/8-14	35	24	10	16	25	9	24	27
63	36	M27x3	30	M27x2	36	1-14	30	1-14	36	1 1/4-12	45	28	12	22	33	11	32	35
80	45	M33x3.5	35	M33x2	45	1 1/4-12	35	1 1/4-12	45	1 1/2-12	56	34	14	28	41	13	39	43
100	56	M42x4.5	45	M42x2	56	1 1/2-12	45	1 1/2-12	56	1 3/4-12	70	42	16	35	52	22	48	54

Rod End Dimensions

Thread Style 4

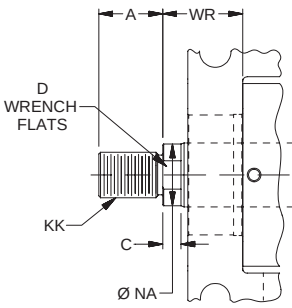

Thread Style 8

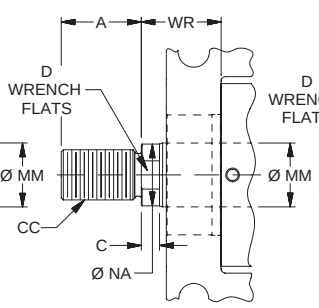

Thread Style 9

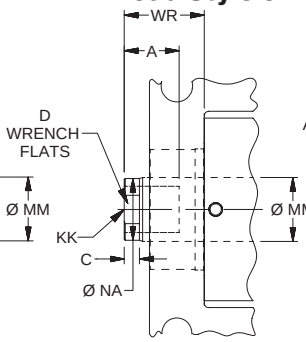

Style 55

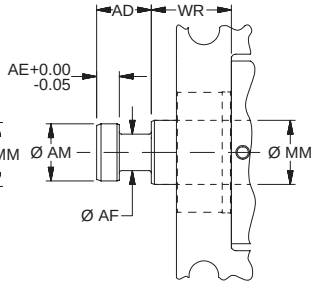

"Special" Thread Style 3

Special thread, extension, rod eye, blank, etc. are also available.

To order, specify "Style 3" and give desired dimensions for KK, A, & WR. If otherwise special furnish dimensional sketch.

Style CA Side Lug Mount – Double Rod End – 20mm to 100mm Bore Size

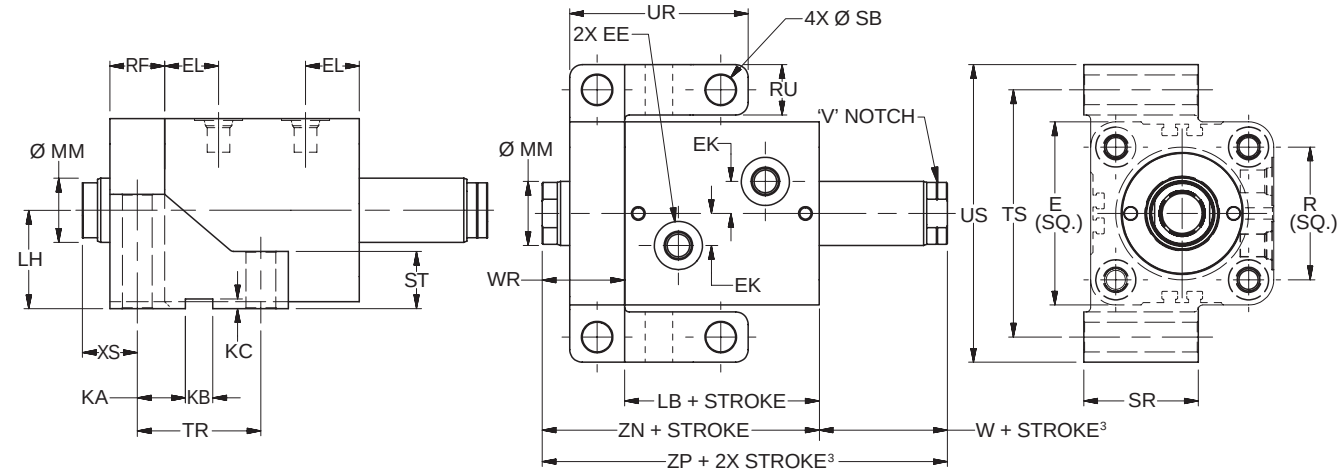

CA Mount Double Rod End – Envelope and Mounting Dimensions

Bore Ø	E	EE			EK	EL	KA	KB	KC	LH	R	RF	RU	SB Ø	SR	ST	TR	TS	UR	US	W³	WR	XS	Add Stroke		Add 2X Stroke
		SAE	NPTF	BSP																				LB	ZN	ZP³
20	43[1]	#2[2]	1/8	G-1/8	6	16.5	12	5	2.75	24	30	10	10	5.5	25	10	29	58	39	68	8	18	13	43	61	69
25	49	#2[2]	1/8	G-1/8	8	17.5	13.5	6	3.25	27	36	12	12	6.8	30	12	33	66	45	78	8	20	14	45	65	73
32	62	#4	1/4	G-1/4	11	20.5	16.5	8	3.75	34	47	16	15	9	35	15	41	82	57	97	10	26	18	51	77	87
40	70	#4	1/4	G-1/4	12	21	18.5	10	4.25	38	52	20	18	11	40	20	47	94	67	112	10	30	20	55	85	95
50	80	#4	1/4	G-1/4	14	22.5	21	12	4.25	43	58	24	22	13.5	50	25	54	108	78	130	11	35	23	60	95	106
63	94	#4	1/4	G-1/4	17	26	25	14	4.75	51	69	28	26	16	60	30	64	128	92	154	13	41	27	67	108	121
80	114	#6	3/8	G-3/8	20	29.5	30	16	5.25	61	86	32	30	18	70	35	76	152	108	182	17	49	33	78	127	144
100	138	#6	3/8	G-3/8	25	35	36.5	20	6.25	75	106	38	36	22	80	40	93	186	131	222	26	64	45	96	160	186

[1] Port face on 20mm bore is extended 2mm. See port face extension drawing on T Mount page.

[2] Parker Triple-Lok™ Straight Thread Connector SAE #2 to ¼" 37° flare can be used when this port thread is required. Contact your local Parker Tube Fitting distributor and specify part number 4-2 F5OX.

[3] Minimum 'W + Stroke' on V notch rod side may apply. See minimum rod extension page for details.

CA Mount Double Rod End – Rod Dimensions

Bore Ø	MM Rod Ø	Rod End														Rod Extension Dimensions		
		Style 9M³		Style 4M		Style 9A³		Style 4A		Style 8A		Style 55M						
		KK	A	KK	A	KK	A	KK	A	CC	A	AD	AE	AF	AM	C	D	NA
20	12	M8x1.25	10	M8x1	14	5/16-24	10	5/16-24	14	3/8-24	16	8	3	6	11	6	10	11
25	14	M10x1.5	12	M10x1.25	16	3/8-24	12	3/8-24	16	1/2-20	18	12	4	8	13	6	12	13
32	18	M12x1.75	15	M12x1.25	18	7/16-20	15	7/16-20	18	9/16-18	25	16	6	10	16	8	15	17
40	22	M16x2	20	M16x1.5	22	5/8-18	20	5/8-18	22	3/4-16	30	20	8	12	20	8	19	21
50	28	M20x2.5	24	M20x1.5	28	3/4-16	24	3/4-16	28	7/8-14	35	24	10	16	25	9	24	27
63	36	M27x3	30	M27x2	36	1-14	30	1-14	36	1 1/4-12	45	28	12	22	33	11	32	35
80	45	M33x3.5	35	M33x2	45	1 1/4-12	35	1 1/4-12	45	1 1/2-12	56	34	14	28	41	13	39	43
100	56	M42x4.5	45	M42x2	56	1 1/2-12	45	1 1/2-12	56	1 3/4-12	70	42	16	35	52	22	48	54

Rod End Dimensions

Thread Style 4

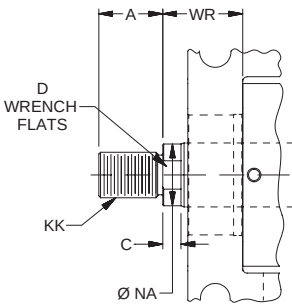

Thread Style 8

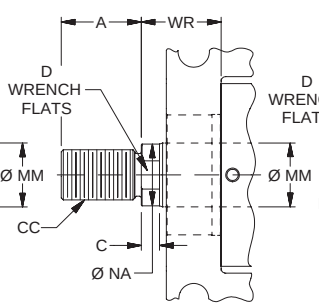

Thread Style 9

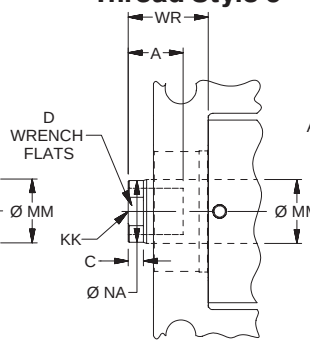

Style 55

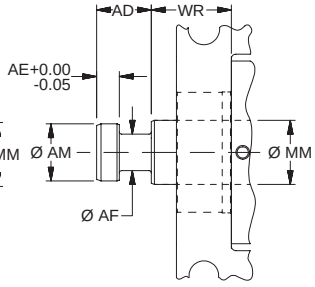

"Special" Thread Style 3

Special thread, extension, rod eye, blank, etc. are also available.

To order, specify "Style 3" and give desired dimensions for KK, A, & WR. If otherwise special furnish dimensional sketch.

Global Position Sensing Switches

- Low Profile Keeps Switch Within Cylinder Envelope
- Both Reed and Solid State Switch Versions
- Switches Available World-Wide
- Solid State Switches use GMR Technology
- 3 Different Connection Styles
- Allow Position Sensing Anywhere Along Cylinder Stroke
- CE Approved

Global Drop-In Solid State Switches

Wiring	PNP Switch	NPN Switch	PNP Switch ATEX Certified	PNP Switch High Temperature
3m Flying Leads	P8SAGPFAX	P8SAGNFAX	P8SAGPFAXS	P8S-GPFLH[1]
10m Flying Leads	P8SAGPFDX	P8SAGNFDX	N/A	N/A
0.3m Lead with 8mm Connector	P8SAGPCHX	P8SAGNCHX		

[1] High Temperature switch is not UL Listed.

CHE

Specifications

Switch Classification	Standard PNP or NPN	ATEX Certified PNP	High Temperature PNP
Type	Electronic	Electronic	Electronic
Output Function	Normally Open	Normally Open	Normally Open
Switch Output	PNP/NPN	PNP	PNP
Operating Voltage	10 - 30VDC	10 - 30VDC	10 - 30VDC
Continuous Current	100 mA max.	50 mA max.	200 mA max.
Magnetic Field Sensitivity	2.6 - 3.3mT	2.8 mT	25 Gauss
Switching Frequency	1 kHz	1 kHz	10 kHz
Power Consumption	8 mA max.	10 mA max.	15 mA max.
Voltage Drop	2 VDC max.	2.2 VDC max.	3.1 VDC max.
Ripple	10% of Operating Voltage	10% of Operating Voltage	15% of Operating Voltage
Hysteresis	1.5 mm max.	1.5 mm max.	1.5 mm max.
Repeatability	0.1 mm max.	0.1 mm max.	0.1 mm max.
EMC	EN 60 947-5-2	EN 60 947-5-2	EN 60 947-5-2
Short-circuit Protection	Yes	Yes	Yes
Power-up Pulse Suppression	Yes	Yes	Yes
Reverse Polarity Protection	Yes	Yes	Yes
Enclosure Rating	IP67	IP67	IP67
Shock and Vibration Stress	30g, 11 ms, 10 to 55Hz, 1 mm	30g, 11 ms, 10 to 55Hz, 1 mm	30g, 11 ms, 10 to 55Hz, 1 mm
Operating Temperature Range	-30°C to +80°C (-22°F to +176°F)	-20°C to +50°C (-4°F to +122°F)	-25°C to +105°C (-13°F to +221°F)
Housing Material	PA 12 Black	PA 12 Black	Aluminum
Connector Cable	PUR	PUR	PUR
Connector	PUR	–	–
Approval for ATEX	–	3D/3G	–

Global solid state switch outputs may be influenced by an external magnetic field. Care must be taken to avoid external magnetic field exposure.

Solid State Switch – Wiring Connection
Flying Lead or 8 mm Connector

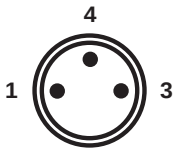

Pin	Wire	Function
1	Brown	Operating Voltage (+VDC)
4	Black	Output signal (N.O.)
3	Blue	-VDC

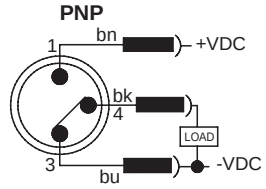

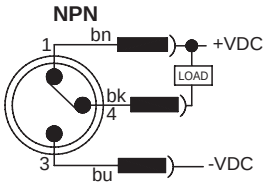

Global Drop-In Reed Switches

Wiring	Reed Switch
3m Flying Leads	P8SAGRFAX
10m Flying Leads	P8SAGEFRX
0.3m Lead with 8mm Connector	P8SAGRCHX

Reed Switch – Wiring Connection

Flying Lead or 8 mm Connector

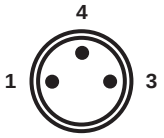

Pin	Wire	Function
1	Brown	Operating Voltage (+V)
4	Black	Not Used
3	Blue	Output Signal (-V or Ground)

Specifications

Type ..... 2-Wire Reed
Output Function ..... Normally Open
Operating Voltage ..... 5 - 30 VDC
Switching Power..... 6 W
Continuous Current ..... 100 mA max.
Response Sensitivity ..... 2.1 - 3.4mT
Switching Frequency ..... 400 Hz
Voltage Drop ..... 3.5 VDC max.
Ripple ..... 10% of Operating Voltage
Hysteresis..... 1.5 mm max.
Repeatability..... 0.2 mm max.
EMC ..... EN 60 947-5-2
Reverse Polarity Protection..... No
Enclosure Rating ..... IP 67
Shock and Vibration Stress..... 30g, 11 ms, 10 to 55 Hz, 1 mm
Operating Temperature Range... -30°C to +80°C (-22°F to 176°F)
Housing Material ..... PA 12 Black
Connector Cable ..... PUR
Connector ..... PUR

Global Reed Switch output may be influenced by external magnetic fields. Care must be taken to avoid external magnetic field exposure.

Circuit for Switching Contact Protection (Inductive Loads)

(Required for proper operation 24V DC)

Put Diode parallel to loads following polarity as shown below.

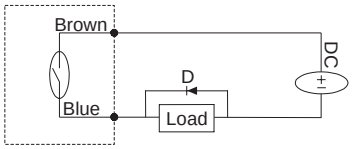

D: Diode: select a Diode with the breakdown voltage and current rating according to the load.

Typical Example—100 Volt, 1 Amp Diode
CR: Relay coil (under 0.5W coil rating)

(Recommended for longer life 120 VAC)

Put a resistor and capacitor in parallel with the load. Select the resistor and capacitor according to the load.

Typical Example:

CR: Relay coil (under 2W coil rating)
R: Resistor 1 KΩ - 5 KΩ, 1/4 W
C: Capacitor 0.1 ΩF, 600 V

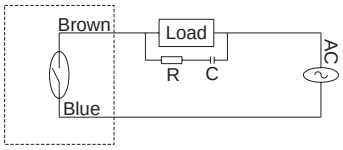

⚠Caution

– Use an ampmeter to test reed switch current. Testing devices such as incandescent light bulbs may subject the reed sensor to high in-rush loads.
– **NOTE:** When checking an unpowered reed switch for continuity with a digital ohmmeter the resistance reading will change from infinity to a very large resistance (2 M ohm) when the sensor is activated. This is due to the presence of a diode in the reed switch.
– Anti-magnetic shielding is recommended for reed switches exposed to high external RF or magnetic fields.
– The magnetic field strength of the piston magnet is designed to operate with our switches. Other manufacturers' switches may not operate correctly in conjunction with these magnets.
– Use relay coils for reed switch contact protection.
– The operation of some 120 VAC PLC's (especially some older Allen-Bradley PLC's) can overload the reed switch. The switch may fail to release after the piston magnet has passed. This problem may be corrected by the placement of a 700 to 1K OHM resistor between the switch and the PLC input terminal. Consult the manufacturer of the PLC for appropriate circuit.
– Switches with long wire leads (greater than 15 feet) can cause capacitance build-up and sticking will result. Attach a resistor in series with the reed switches (the resistor should be installed as close as possible to the switches). The resistor should be selected such that R (ohms) >E/0.3.
– Global reed switch outputs may be influenced by an external magnetic field. Care must be taken to avoid external magnetic field exposure.

Dimensions in mm (inch)

PNP, NPN Output 10 to 30 V DC

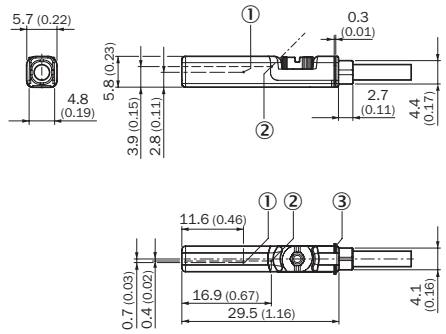

① Position sensor element
② Indication LED
③ Retaining ribs

NAMUR ATEX 1G, 1D, ATEX 3G, 3D

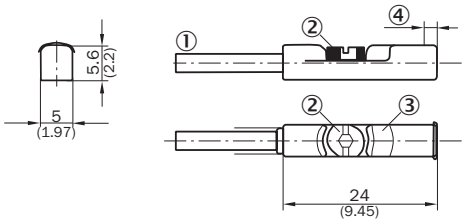

① Connection
② Fixing screw
③ Indication LED
④ Position of sensor element; short overrun distance: 2 mm; long overrun distance: 1.7 mm

Reed Output 5 to 30 V AC/DC

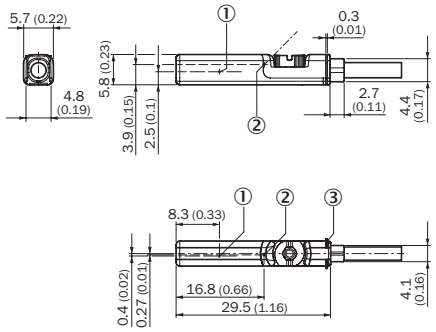

① Position sensor element
② Indication LED
③ Retaining ribs

Connector M8R

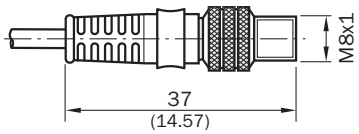

CHE

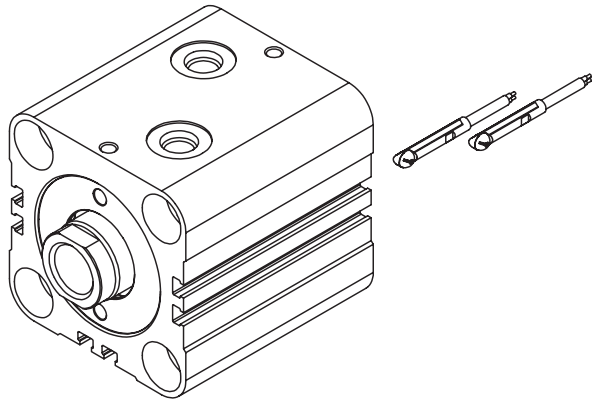

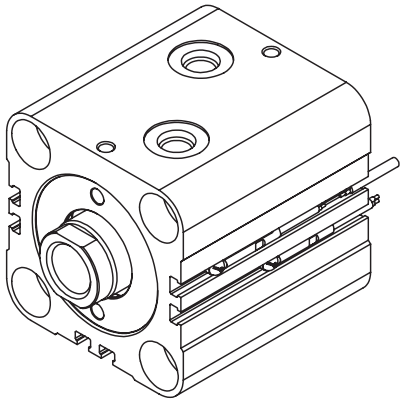

1. Slide the switch into any of the six mounting grooves provided.
2. For end of stroke sensing, position the triangle △ on the switch at the specific distance from the cylinder body end as listed in the table below.
3. Locate the switch as required for intermediate stroke position sensing.
4. Turn the locking screw clockwise to secure the switch in place.

Minimum Stroke for Cylinders with Switches

All Bores	One Switch	Two Switches
	5mm	10mm

Switch Location for End-of-Stroke Sensing

Bore	A	B
20	24	18.5
25	25	19.5
32	28	22.5
40	31	23.5
50	33.5	26
63	37	29.5
80	42.5	35
100	53	42.5

Without Adapter directly in T-Slot

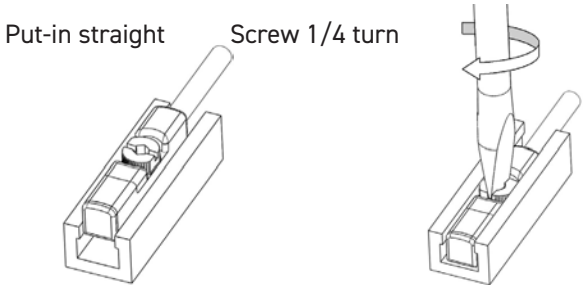

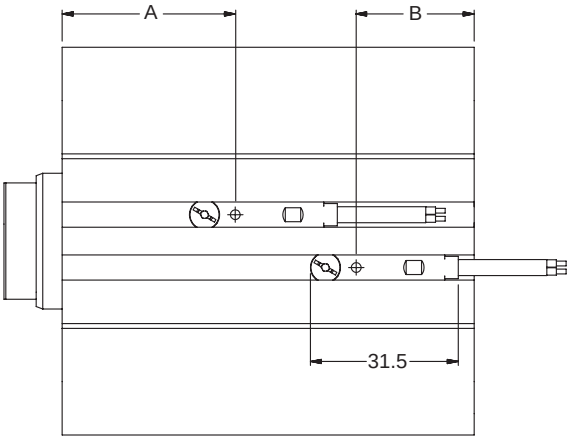

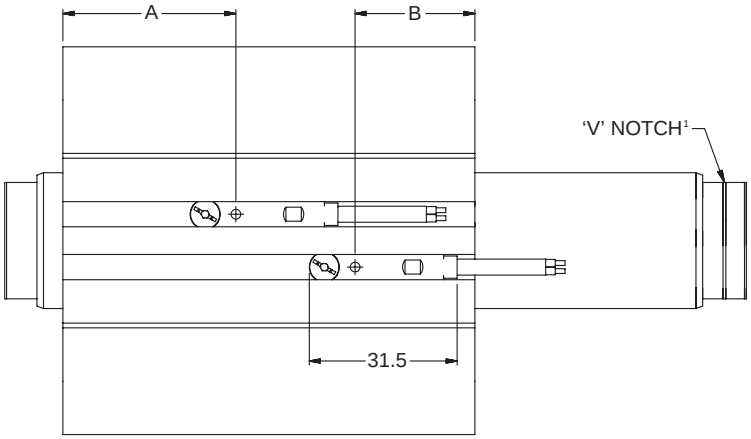

[1] The rod side for switch location 'B', on double rod end cylinders, is identified by a 'V' notch in the 'NA' diameter of rod end styles #4, #8, and #9. The 'V' notch will be in the 'AM' diameter of rod end style #55.

8mm Cordset for Global Switches

A female connector is available for all switches with the male 8mm quick connect option. The cordsets are available with a right angle or straight connector. Cordset part numbers are listed below.

8mm Cordset

Cable Length	Threaded Connector	Snap On Connector
5 meters	086620T005	086620S005
2 meters	086620T002	086620S002

Cordset Specifications

Connector ..... Oil resistant polyurethane body material, PA 6 (Nylon) contact carrier, spacings to VDE 0110 Group C, (150 AC/DC)

Contacts ..... Gold plated beryllium copper, machined from solid stock

Coupling Method ..... Snap-Lock or chrome plated brass nut

Cord Construction ..... Oil resistant black PUR jacket, non-wicking, non-hygroscopic, 300V. Cable end is stripped and tinned.

Conductors ..... Extra high flex stranding, PVC insulation

Temperature ..... -40 to 194°F (-40 to 90°C)

Protection ..... NEMA 1, 3, 4, 6P and IEC 1P67

Cable Length ..... 6.56 ft (2m) or 16.4 ft (5m)

8mm Snap-On Straight Connector

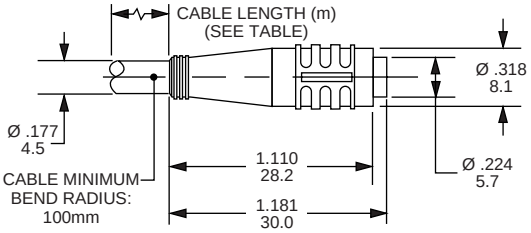

8mm Threaded Straight Connector

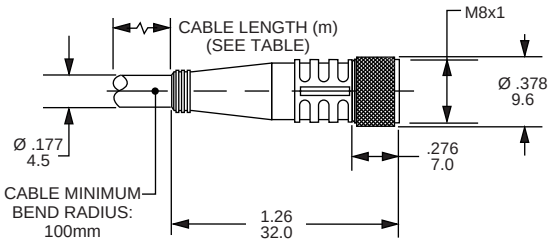

Series CHD Cylinder Features

Primary Seal – polyurethane rod seal with multiple sealing edges is self-compensating and self relieving to withstand pressure variations and conform to mechanical deflection that may occur.

Piston Rod – Medium carbon steel, hard chrome plated and polished.

Ports – SAE O-ring ports are standard.

OPTIONAL PORTS
NPTF and BSPP ports are also available. Manifold ports are available on mounting styles C & CN.

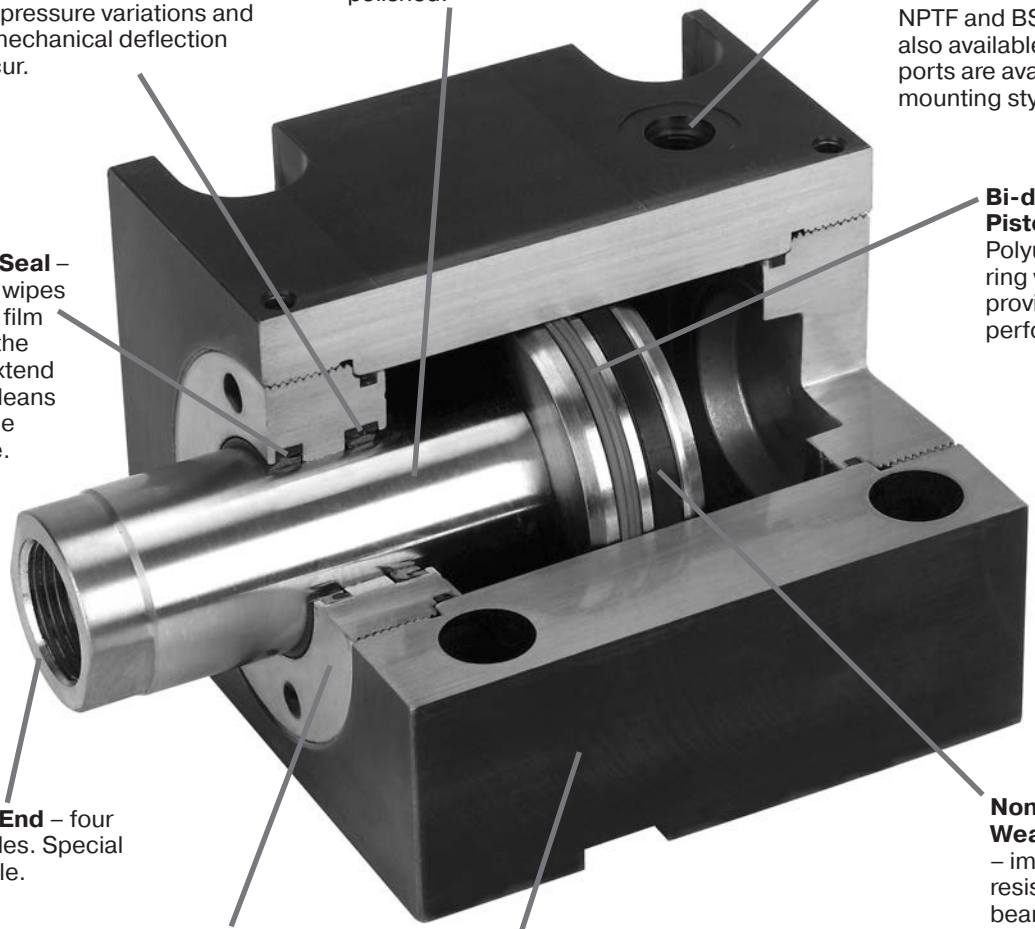

Bi-directional Piston Seal – Polyurethane seal ring with energizer provides leak-free performance.

Secondary Seal – Rod Wiper – wipes clean any oil film adhering to the rod on the extend stroke and cleans the rod on the return stroke.

Piston Rod End – four standard styles. Special ends available.

Non-Metallic Wear Band – improves resistance to bearing loads.

Rod Gland – nodular iron bearing with RoHS compliant zinc plating for corrosion resistance. Optional pilot gland available at no additional cost.

Cylinder Body – steel with black paint exterior surface treatment.

CHD Compact Hydraulic Cylinders…

require less mounting space than conventional tie rod cylinders.

Shorter overall length for the same bore and stroke

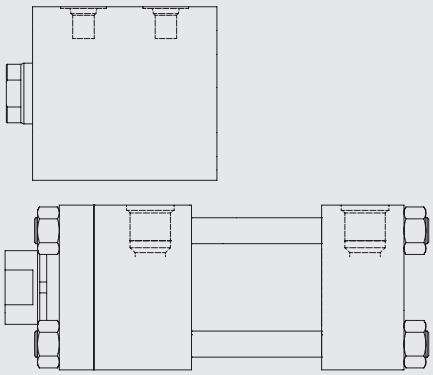

50mm bore by 25mm stroke shown

Optional Pilot Gland…

offers added bearing area to increase service life and also improves alignment of cylinder and load.

Standard Gland | **Pilot Gland**

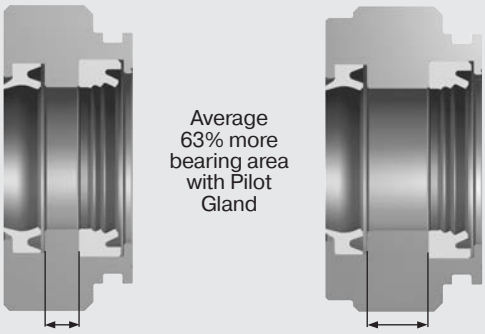

(18mm rod glands depicted)

Use pilot cap to improve alignment for rear mount applications

Theoretical Push and Pull Forces

The cylinder output forces are derived from the formula:

$$F = \frac{P \times A}{10000}$$

Where F = Force in kN.
P = Pressure at the cylinder in bar.
A = Effective area of cylinder piston in square mm.

To determine the bore size for the application take the following steps.

1. Select the Operating Pressure column closest to that desired.
2. In the same column, identify the force required to move the load (always rounding up). If the piston rod is in compression use the 'Push' row and if the piston rod is in tension use the 'Pull' row.
3. In the row to the left is the bore required.

If the cylinder envelope dimensions are too large for the application, increase the operating pressure to the maximum pressure in the table below, if possible, and repeat steps 1 - 3.

Push and Pull Force in kN

Bore Ø	Rod Ø	Operating Direction	Piston Area (mm²)	Operating Pressure (Bar)						
				50	75	100	125	150	175	207
20	12	Push	314	1.57	2.36	3.14	3.93	4.71	5.50	6.50
		Pull	201	1.01	1.51	2.01	2.51	3.02	3.52	4.16
25	14	Push	491	2.45	3.68	4.91	6.14	7.36	8.59	10.2
		Pull	337	1.68	2.53	3.37	4.21	5.05	5.90	6.97
32	18	Push	804	4.02	6.03	8.04	10.1	12.1	14.1	16.6
		Pull	550	2.75	4.12	5.50	6.87	8.25	9.62	11.4
40	22	Push	1,257	6.28	9.42	12.6	15.7	18.8	22.0	26.0
		Pull	877	4.38	6.57	8.8	11.0	13.1	15.3	18.1
50	28	Push	1,963	9.82	14.7	19.6	24.5	29.5	34.4	40.6
		Pull	1,348	6.74	10.1	13.5	16.8	20.2	23.6	27.9
63	36	Push	3,117	15.6	23.4	31.2	39.0	46.8	54.6	64.5
		Pull	2,099	10.5	15.7	21.0	26.2	31.5	36.7	43.5
80	45	Push	5,027	25.1	37.7	50.3	62.8	75.4	88.0	104
		Pull	3,436	17.2	25.8	34.4	43.0	51.5	60.1	71.1

Series CHD Pressure Rating

Bore Ø	Maximum Working Pressure in bar
20	207
25	207
32	207
40	207
50	207
63	207
80	207

Equivalents

1 kN = 224.81 pounds force
1 bar = 14.50 psi
1 mm = .03937 inch
1 mm² = .00155 inch²

CHD

Cylinder Weights

To determine the weight of a Series CHD cylinder, first select the proper basic zero stroke weight for the mounting required, and then calculate the weight of the cylinder stroke and add the result to the basic weight. For extra rod extension, use piston rod weights per mm in Table C.

Table A Single Rod End CHD Cylinder Weights in kg.

Bore Ø	Rod Ø	Single Rod Cylinders									
		Basic Weight at Zero Stroke				Per mm Stroke	Basic Weight at Zero Stroke	Per mm Stroke	Basic Weight at Zero Stroke		Per mm Stroke
		T	TN, TR	A, M	AN, AR, MN, MR		J, H		C	CN	
20	12	0.57	0.58	0.61	0.62	0.013	0.84	0.013	-	-	-
25	14	0.80	0.81	0.84	0.85	0.016	1.17	0.017	0.71	0.73	0.015
32	18	1.39	1.42	1.45	1.48	0.024	1.92	0.025	1.41	1.43	0.026
40	22	1.87	1.90	1.97	2.01	0.029	2.81	0.031	1.93	1.96	0.033
50	28	2.61	2.67	2.79	2.85	0.036	4.20	0.038	2.82	2.88	0.044
63	36	4.11	4.20	4.34	4.42	0.047	6.11	0.051	4.69	4.78	0.063
80	45	7.19	7.33	7.49	7.62	0.067	10.7	0.072	-	-	-

Table C Piston rod weights in kg.

Rod Ø	Piston Rod Weight per mm
12	0.001
14	0.001
18	0.002
22	0.003
28	0.005
36	0.008
45	0.012

Table B Double Rod End CHD Cylinder Weights in kg.

Bore Ø	Rod Ø	Double Rod Cylinders									
		Basic Weight at Zero Stroke				Per mm Stroke	Basic Weight at Zero Stroke	Per mm Stroke	Basic Weight at Zero Stroke		Per mm Stroke
		T	TN	A, M	AN, MN		J		C	CN	
20	12	0.60	0.61	0.64	0.65	0.013	0.87	0.014	-	-	-
25	14	0.83	0.85	0.87	0.89	0.017	1.21	0.018	0.75	0.77	0.016
32	18	1.46	1.48	1.52	1.54	0.026	1.98	0.027	1.47	1.50	0.028
40	22	1.97	2.01	2.08	2.11	0.032	2.92	0.034	2.03	2.07	0.036
50	28	2.81	2.87	2.99	3.05	0.041	4.40	0.043	3.02	3.08	0.049
63	36	4.52	4.61	4.75	4.83	0.055	6.53	0.059	5.10	5.19	0.071
80	45	7.99	8.12	8.28	8.42	0.080	11.5	0.085	-	-	-

Equivalent

1 kg = 2.2046 pounds

Model Ordering Code for CHD

32		T	CHD	B	T			9		A	25
Bore Dia.	**Double Rod Cylinder**	**Mounting Style**	**Series**	**Piston**	**Ports**	**Seals**	**Special Modification**	**Piston Rod Thread Style**	**Piston Rod Thread Style** (For Dbl. Rod)	**Piston Rod Thread Type**	**Stroke**
Specify: (Bore dia. in mm) 20 25 32 40 50 63 80	Use "K" only if double rod cylinder is required.	Specify: T = Std. Mount; TN = Std. Mount with pilot gland; TR = Std. Mount with cap pilot; A = Imperial thread tapped both ends; AN = Imperial tapped with pilot gland; AR = Imperial tapped with cap pilot; M = Metric thread tapped both ends; MN = Metric tapped with pilot gland; MR = Metric tapped with cap pilot; C = Foot Mount; CN = Foot Mount with pilot gland; J = Head Rectangular Flange; H = Cap Rectangular Flange	CHD	Specify: B = Non-magnetic piston. Add option: 9 = Non-magnetic piston with bronze cap & gland.	Specify: T = SAE Ports; U = NPTF Ports; R = BSPP Ports; M = Manifold Ports[1]	Leave blank for std. Nitrile Seals; 2 = Water Base Fluid Seals; V = Fluoro-carbon	Use "S" for Special Modifi-cation other than rod end, and specify modifi-cation.	Specify: 4 = Small Male; 8 = Inter-mediate Male; 9 = Female; 55 = Flange Coupler; 3 = Special[2]	Specify: 4 = Small Male; 8 = Inter-mediate Male; 9 = Female; 55 = Flange Coupler; 3 = Special[2]	Specify: A = Imperial (UNF or UNC); M = Metric[3]	Specify Stroke Length Required in mm[4].

Shaded boxes identify required model number fields.

[1] Manifold ports are only available on Foot Mounting Styles C & CN. See Mounting Styles C & CN Dimension Pages for minimum stroke with Manifold Ports.

[2] To order thread style 3, specify "3" and give the desired dimensions for KK, A, and W (or WP depending on mounting) or furnish a dimensioned sketch.

[3] Always use M for rod style 55.

Maximum Stroke

Bore Ø	Stroke[5] in mm		
	Mounting Styles T, TN, TR, A, AN, AR, M, MN, MR	Mounting Styles C & CN	Bolt-on Mounting Styles[6] J & H
20	50	N/A	50
25	60	50	60
32	115	100	100
40	115	100	100
50	125	100	100
63	115	100	100
80	115	N/A	100

[4] See Maximum Stroke Chart above.

[5] Intermediate strokes in 1mm increments are available.

[6] Longer strokes (up to maximum lengths for Mounting Styles T, TN, TR, A, AN, AR, M, MN & MR) are available at increased manufacturing lead times. Contact the factory.

Standard Specifications

- 13 Standard mounting styles
- Bore sizes – 20mm to 80mm
- Piston Rod Diameter – 12mm to 45mm
- Single and double rod construction available
- Strokes up to 100mm depending on bore size (see table above)
- Working pressure up to 207 bar
- Temperature range – -23°C to +121°C (depending on seal class)
- Reference ISO 16656: 2004

Seal Classes	Typical Fluids	Temperature Range
1 – Standard Nitrile & Polyurethane	Hydraulic Oil, MIL-H-5606 Oil	-23°C (-10°F) to +100°C (+212°F)
2 – Optional Water Base Fluid Seal	Water-in-Oil Emulsion – Houghto-Safe 271, 620, 5040. Mobil Pyrogard D. Shell Irus 905. Ucon Hydrolube J-4	-23°C (-10°F) to +121°C (+250°F)
5 – Optional (at extra cost) Fluorocarbon Seals	High Temperature	-23°C (-10°F) to +121°C (+250°F) Class 5 seals may be operated up to +204°C (+400°F) with reduced service life

Note: Class 5 seals are not suitable for use with Skydrol fluid, but can be used with hydraulic oil if desired.

Style T Through Bolt Mount – Single Rod End – 20mm to 80mm Bore Size

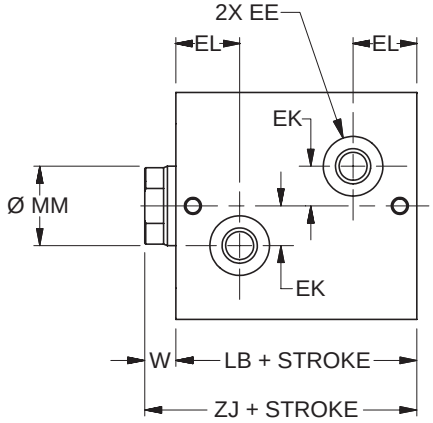

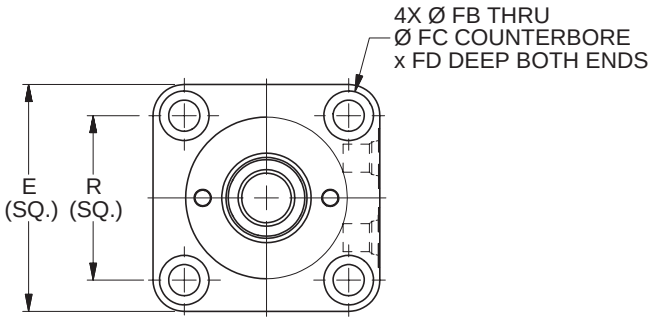

T Mount Single Rod End – Envelope and Mounting Dimensions

Bore Ø	E	EE			EK	EL	FB Ø	FC Ø	FD	R	W	Add Stroke	
		SAE	NPTF	BSP								LB	ZJ
20	44	#2[1]	1/8	G-1/8	6	16.5	5.5	9.5	5.4	30	8	43	51
25	50	#2[1]	1/8	G-1/8	8	17.5	5.5	9.5	5.4	36	8	45	53
32	62	#4	1/4	G-1/4	11	20.5	7	11	6.5	47	10	51	61
40	70	#4	1/4	G-1/4	12	21	9	14	8.6	52	10	55	65
50	80	#4	1/4	G-1/4	14	22.5	11	17.5	10.8	58	11	60	71
63	94	#4	1/4	G-1/4	17	26	13.5	20	13	69	13	67	80
80	114	#6	3/8	G-3/8	20	29.5	16	23	15.2	86	17	78	95

[1] Parker Triple-Lok™ Straight Thread Connector SAE #2 to ¼" 37° flare can be used when this port thread is required. Contact your local Parker Tube Fitting distributor and specify part number 4-2 F5OX.

T Mount Single Rod End – Rod Dimensions

Bore Ø	MM Rod Ø	Rod Thread														Rod Extension Dimensions		
		Style 9M		Style 4M		Style 9A		Style 4A		Style 8A		Style 55M						
		KK	A	KK	A	KK	A	KK	A	CC	A	AD	AE	AF	AM	C	D	NA
20	12	M8x1.25	10	M8x1	14	5/16-24	10	5/16-24	14	3/8-24	16	8	3	6	11	6	10	11
25	14	M10x1.5	12	M10x1.25	16	3/8-24	12	3/8-24	16	1/2-20	18	12	4	8	13	6	12	13
32	18	M12x1.75	15	M12x1.25	18	7/16-20	15	7/16-20	18	9/16-18	25	16	6	10	16	8	15	17
40	22	M16x2	20	M16x1.5	22	5/8-18	20	5/8-18	22	3/4-16	30	20	8	12	20	8	19	21
50	28	M20x2.5	24	M20x1.5	28	3/4-16	24	3/4-16	28	7/8-14	35	24	10	16	25	9	24	27
63	36	M27x3	30	M27x2	36	1-14	30	1-14	36	1 1/4-12	45	28	12	22	33	11	32	35
80	45	M33x3.5	35	M33x2	45	1 1/4-12	35	1 1/4-12	45	1 1/2-12	56	34	14	28	41	13	39	43

Rod End Dimensions

Thread Style 4

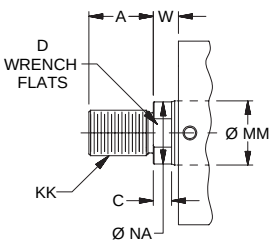

Thread Style 8

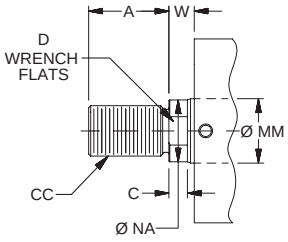

Thread Style 9

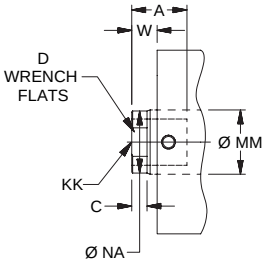

Style 55

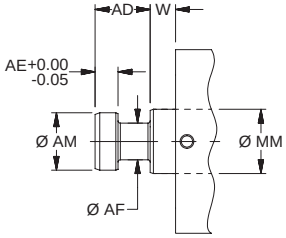

"Special" Thread Style 3

Special thread, extension, rod eye, blank, etc. are also available.

To order, specify "Style 3" and give desired dimensions for KK, A, & W. If otherwise special furnish dimensional sketch.

CHD

Style T Through Bolt Mount – Double Rod End – 20mm to 80mm Bore Size

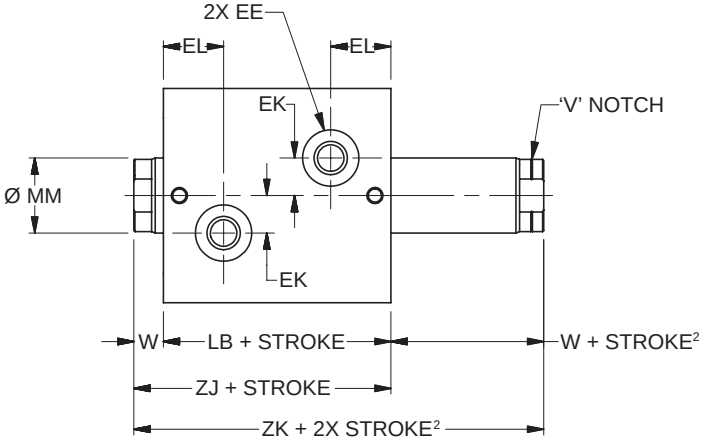

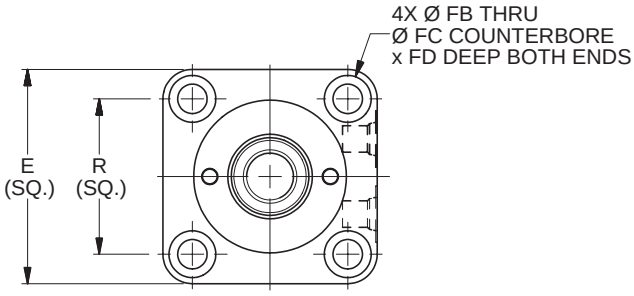

T Mount Double Rod End – Envelope and Mounting Dimensions

Bore Ø	E	EE			EK	EL	FB Ø	FC Ø	FD	R	W[2]	Add Stroke		Add 2X Stroke
		SAE	NPTF	BSP								LB	ZJ	ZK[2]
20	44	#2[1]	1/8	G-1/8	6	16.5	5.5	9.5	5.4	30	8	43	51	59
25	50	#2[1]	1/8	G-1/8	8	17.5	5.5	9.5	5.4	36	8	45	53	61
32	62	#4	1/4	G-1/4	11	20.5	7	11	6.5	47	10	51	61	71
40	70	#4	1/4	G-1/4	12	21	9	14	8.6	52	10	55	65	75
50	80	#4	1/4	G-1/4	14	22.5	11	17.5	10.8	58	11	60	71	82
63	94	#4	1/4	G-1/4	17	26	13.5	20	13	69	13	67	80	93
80	114	#6	3/8	G-3/8	20	29.5	16	23	15.2	86	17	78	95	112

[1] Parker Triple-Lok™ Straight Thread Connector SAE #2 to ¼" 37° flare can be used when this port thread is required. Contact your local Parker Tube Fitting distributor and specify part number 4-2 F5OX.

[2] Minimum 'W + Stroke' on V notch rod side may apply. See minimum rod extension page for details.

T Mount Double Rod End – Rod Dimensions

Bore Ø	MM Rod Ø	Rod End														Rod Extension Dimensions		
		Style 9M[2]		Style 4M		Style 9A[2]		Style 4A		Style 8A		Style 55M						
		KK	A	KK	A	KK	A	KK	A	CC	A	AD	AE	AF	AM	C	D	NA
20	12	M8x1.25	10	M8x1	14	5/16-24	10	5/16-24	14	3/8-24	16	8	3	6	11	6	10	11
25	14	M10x1.5	12	M10x1.25	16	3/8-24	12	3/8-24	16	1/2-20	18	12	4	8	13	6	12	13
32	18	M12x1.75	15	M12x1.25	18	7/16-20	15	7/16-20	18	9/16-18	25	16	6	10	16	8	15	17
40	22	M16x2	20	M16x1.5	22	5/8-18	20	5/8-18	22	3/4-16	30	20	8	12	20	8	19	21
50	28	M20x2.5	24	M20x1.5	28	3/4-16	24	3/4-16	28	7/8-14	35	24	10	16	25	9	24	27
63	36	M27x3	30	M27x2	36	1-14	30	1-14	36	1 1/4-12	45	28	12	22	33	11	32	35
80	45	M33x3.5	35	M33x2	45	1 1/4-12	35	1 1/4-12	45	1 1/2-12	56	34	14	28	41	13	39	43

Rod End Dimensions

Thread Style 4

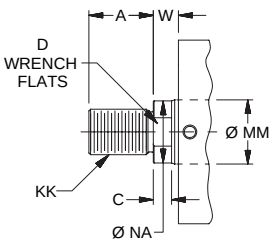

Thread Style 8

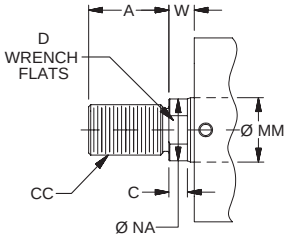

Thread Style 9

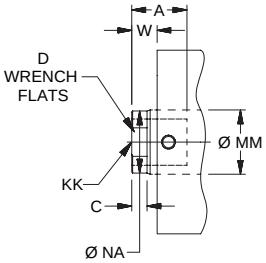

Style 55

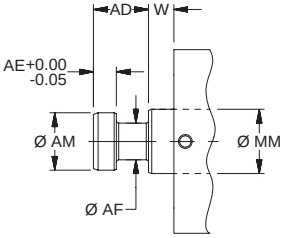

"Special" Thread Style 3

Special thread, extension, rod eye, blank, etc. are also available.

To order, specify "Style 3" and give desired dimensions for KK, A, & W. If otherwise special furnish dimensional sketch.

Styles TN and TR Through Bolt Mount with Pilot Gland or Pilot Cap – Single Rod End – 20mm to 80mm Bore Size

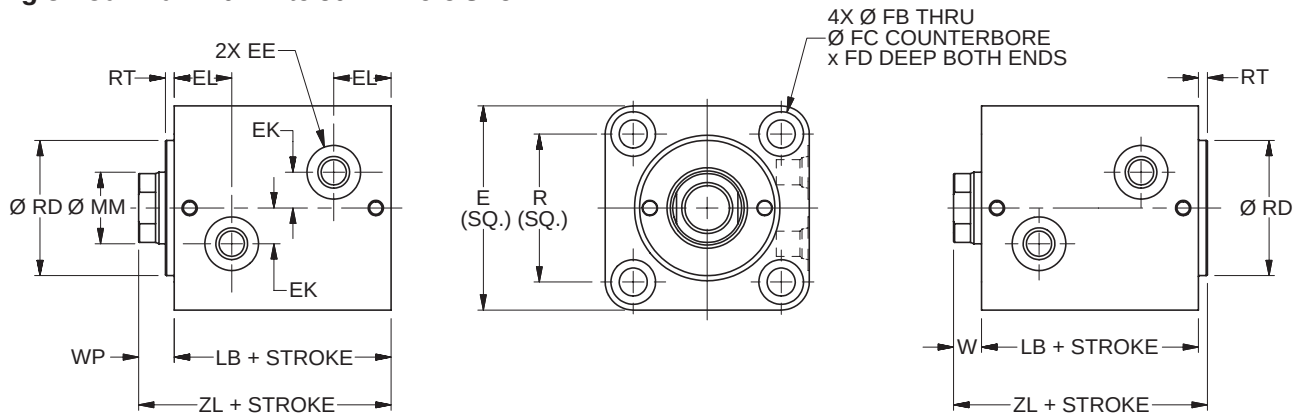

Style TN Pilot Gland Mount **Style TR Pilot Cap Mount**

TN and TR Mount Single Rod End – Envelope and Mounting Dimensions

Bore Ø	E	EE			EK	EL	FB Ø	FC Ø	FD	R	RD Ø f9	RT	W	WP	Add Stroke	
		SAE	NPTF	BSP											LB	ZL
20	44	#2[1]	1/8	G-1/8	6	16.5	5.5	9.5	5.4	30	24	3	8	11	43	54
25	50	#2[1]	1/8	G-1/8	8	17.5	5.5	9.5	5.4	36	27	3	8	11	45	56
32	62	#4	1/4	G-1/4	11	20.5	7	11	6.5	47	36	3	10	13	51	64
40	70	#4	1/4	G-1/4	12	21	9	14	8.6	52	43	3	10	13	55	68
50	80	#4	1/4	G-1/4	14	22.5	11	17.5	10.8	58	53	3	11	14	60	74
63	94	#4	1/4	G-1/4	17	26	13.5	20	13	69	66	3	13	16	67	83
80	114	#6	3/8	G-3/8	20	29.5	16	23	15.2	86	83	3	17	20	78	98

[1] Parker Triple-Lok™ Straight Thread Connector SAE #2 to ¼" 37° flare can be used when this port thread is required. Contact your local Parker Tube Fitting distributor and specify part number 4-2 F5OX.

TN and TR Mount Single Rod End – Rod Dimensions

Bore Ø	MM Rod Ø	Rod End														Rod Extension Dimensions		
		Style 9M		Style 4M		Style 9A		Style 4A		Style 8A		Style 55M						
		KK	A	KK	A	KK	A	KK	A	CC	A	AD	AE	AF	AM	C	D	NA
20	12	M8x1.25	10	M8x1	14	5/16-24	10	5/16-24	14	3/8-24	16	8	3	6	11	6	10	11
25	14	M10x1.5	12	M10x1.25	16	3/8-24	12	3/8-24	16	1/2-20	18	12	4	8	13	6	12	13
32	18	M12x1.75	15	M12x1.25	18	7/16-20	15	7/16-20	18	9/16-18	25	16	6	10	16	8	15	17
40	22	M16x2	20	M16x1.5	22	5/8-18	20	5/8-18	22	3/4-16	30	20	8	12	20	8	19	21
50	28	M20x2.5	24	M20x1.5	28	3/4-16	24	3/4-16	28	7/8-14	35	24	10	16	25	9	24	27
63	36	M27x3	30	M27x2	36	1-14	30	1-14	36	1 1/4-12	45	28	12	22	33	11	32	35
80	45	M33x3.5	35	M33x2	45	1 1/4-12	35	1 1/4-12	45	1 1/2-12	56	34	14	28	41	13	39	43

Rod End Dimensions

Thread Style 4 **Thread Style 8** **Thread Style 9** **Style 55**

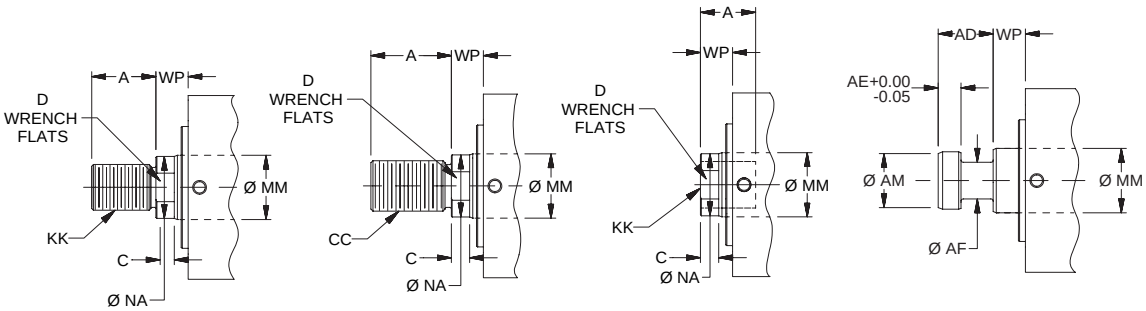

"Special" Thread Style 3

Special thread, extension, rod eye, blank, etc. are also available.

To order, specify "Style 3" and give desired dimensions for KK, A, & W (TR Mount) or WP (TN Mount) If otherwise special furnish dimensional sketch.

CHD

Style TN Through Bolt Mount with Pilot Gland – Double Rod End – 20mm to 80mm Bore Size

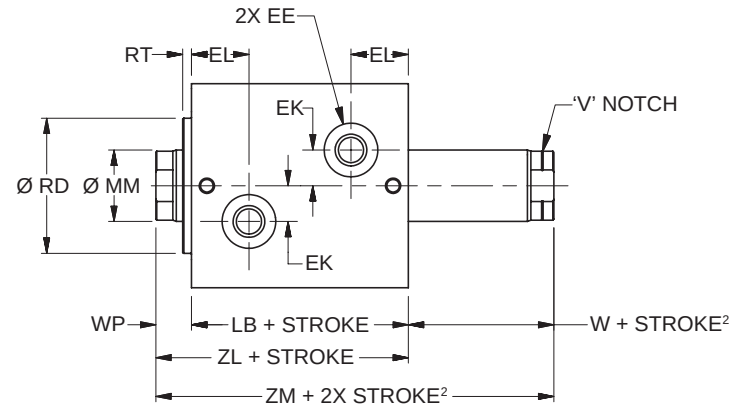

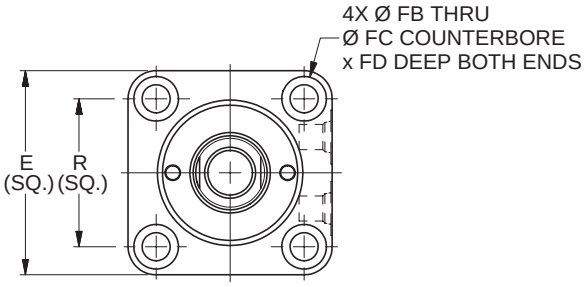

TN Mount Double Rod End – Envelope and Mounting Dimensions

Bore Ø	E	EE			EK	EL	FB Ø	FC Ø	FD	R	RD Ø f9	RT	W²	WP	Add Stroke		Add 2X Stroke
		SAE	NPTF	BSP											LB	ZL	ZM²
20	44	#2[1]	1/8	G-1/8	6	16.5	5.5	9.5	5.4	30	24	3	8	11	43	54	62
25	50	#2[1]	1/8	G-1/8	8	17.5	5.5	9.5	5.4	36	27	3	8	11	45	56	64
32	62	#4	1/4	G-1/4	11	20.5	7	11	6.5	47	36	3	10	13	51	64	74
40	70	#4	1/4	G-1/4	12	21	9	14	8.6	52	43	3	10	13	55	68	78
50	80	#4	1/4	G-1/4	14	22.5	11	17.5	10.8	58	53	3	11	14	60	74	85
63	94	#4	1/4	G-1/4	17	26	13.5	20	13	69	66	3	13	16	67	83	96
80	114	#6	3/8	G-3/8	20	29.5	16	23	15.2	86	83	3	17	20	78	98	115

[1] Parker Triple-Lok™ Straight Thread Connector SAE #2 to ¼" 37° flare can be used when this port thread is required. Contact your local Parker Tube Fitting distributor and specify part number 4-2 F5OX.

[2] Minimum 'W + Stroke' on V notch rod side may apply. See minimum rod extension page for details.

TN Mount Double Rod End – Rod Dimensions

Bore Ø	MM Rod Ø	Rod End														Rod Extension Dimensions		
		Style 9M²		Style 4M		Style 9A²		Style 4A		Style 8A		Style 55M						
		KK	A	KK	A	KK	A	KK	A	CC	A	AD	AE	AF	AM	C	D	NA
20	12	M8x1.25	10	M8x1	14	5/16-24	10	5/16-24	14	3/8-24	16	8	3	6	11	6	10	11
25	14	M10x1.5	12	M10x1.25	16	3/8-24	12	3/8-24	16	1/2-20	18	12	4	8	13	6	12	13
32	18	M12x1.75	15	M12x1.25	18	7/16-20	15	7/16-20	18	9/16-18	25	16	6	10	16	8	15	17
40	22	M16x2	20	M16x1.5	22	5/8-18	20	5/8-18	22	3/4-16	30	20	8	12	20	8	19	21
50	28	M20x2.5	24	M20x1.5	28	3/4-16	24	3/4-16	28	7/8-14	35	24	10	16	25	9	24	27
63	36	M27x3	30	M27x2	36	1-14	30	1-14	36	1 1/4-12	45	28	12	22	33	11	32	35
80	45	M33x3.5	35	M33x2	45	1 1/4-12	35	1 1/4-12	45	1 1/2-12	56	34	14	28	41	13	39	43

Rod End Dimensions

Thread Style 4

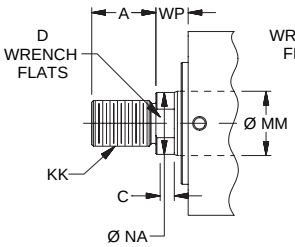

Thread Style 8

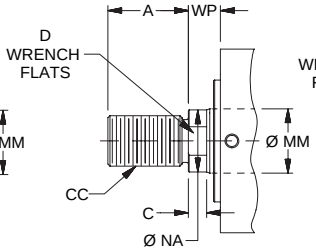

Thread Style 9

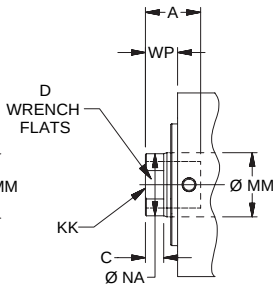

Style 55

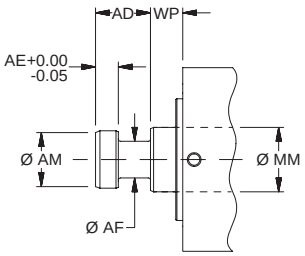

"Special" Thread Style 3

Special thread, extension, rod eye, blank, etc. are also available.

To order, specify "Style 3" and give desired dimensions for KK, A, & WP. If otherwise special furnish dimensional sketch.

Style A Imperial Tapped Both Ends Mount – Single Rod End – 20mm to 80mm Bore Size

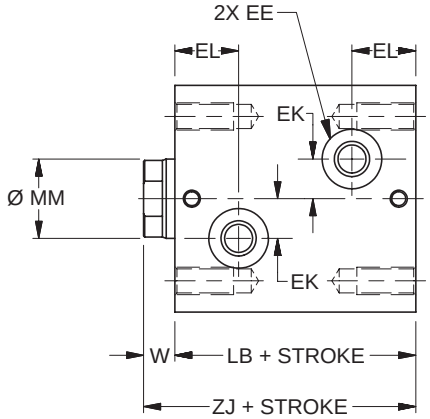

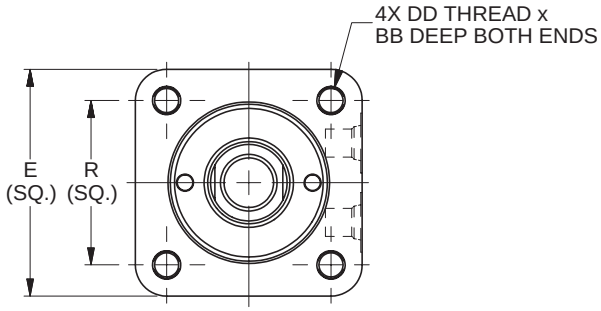

A Mount Single Rod End – Envelope and Mounting Dimensions

Bore Ø	BB	DD	E	EE			EK	EL	R	W	Add Stroke	
				SAE	NPT	BSP					LB	ZJ
20	10.1	10-32 UNF - 2B	44	# 2[1]	1/8	G-1/8	6	16.5	30	8	43	51
25	10.5	10-32 UNF - 2B	50	# 2[1]	1/8	G-1/8	8	17.5	36	8	45	53
32	12.5	1/4-28 UNF - 2B	62	# 4	1/4	G-1/4	11	20.5	47	10	51	61
40	16.6	5/16-24 UNF - 2B	70	# 4	1/4	G-1/4	12	21	52	10	55	65
50	20.8	3/8-24 UNF - 2B	80	# 4	1/4	G-1/4	14	22.5	58	11	60	71
63	24.3	1/2-20 UNF - 2B	94	# 4	1/4	G-1/4	17	26	69	13	67	80
80	28.8	5/8-18 UNF - 2B	114	# 6	3/8	G-3/8	20	29.5	86	17	78	95

[1] Parker Triple-Lok™ Straight Thread Connector SAE #2 to ¼" 37° flare can be used when this port thread is required. Contact your local Parker Tube Fitting distributor and specify part number 4-2 F5OX.

A Mount Single Rod End – Rod Dimensions

Bore Ø	MM Rod Ø	Rod End														Rod Extension Dimensions		
		Style 9M		Style 4M		Style 9A		Style 4A		Style 8A		Style 55M						
		KK	A	KK	A	KK	A	KK	A	CC	A	AD	AE	AF	AM	C	D	NA
20	12	M8x1.25	10	M8x1	14	5/16-24	10	5/16-24	14	3/8-24	16	8	3	6	11	6	10	11
25	14	M10x1.5	12	M10x1.25	16	3/8-24	12	3/8-24	16	1/2-20	18	12	4	8	13	6	12	13
32	18	M12x1.75	15	M12x1.25	18	7/16-20	15	7/16-20	18	9/16-18	25	16	6	10	16	8	15	17
40	22	M16x2	20	M16x1.5	22	5/8-18	20	5/8-18	22	3/4-16	30	20	8	12	20	8	19	21
50	28	M20x2.5	24	M20x1.5	28	3/4-16	24	3/4-16	28	7/8-14	35	24	10	16	25	9	24	27
63	36	M27x3	30	M27x2	36	1-14	30	1-14	36	1 1/4-12	45	28	12	22	33	11	32	35
80	45	M33x3.5	35	M33x2	45	1 1/4-12	35	1 1/4-12	45	1 1/2-12	56	34	14	28	41	13	39	43

Rod End Dimensions

Thread Style 4

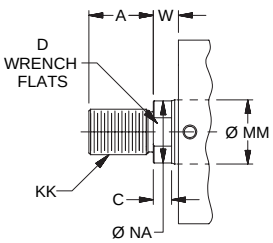

Thread Style 8

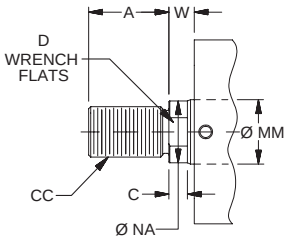

Thread Style 9

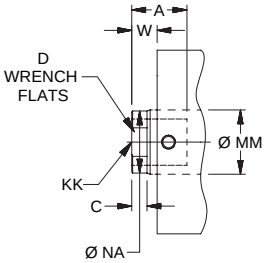

Style 55

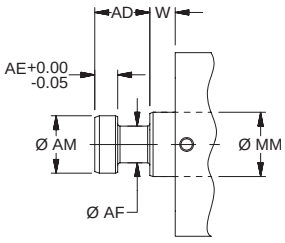

"Special" Thread Style 3

Special thread, extension, rod eye, blank, etc. are also available.

To order, specify "Style 3" and give desired dimensions for KK, A, & W. If otherwise special furnish dimensional sketch.

CHD

Style A Imperial Tapped Both Ends Mount – Double Rod End – 20mm to 80mm Bore Size

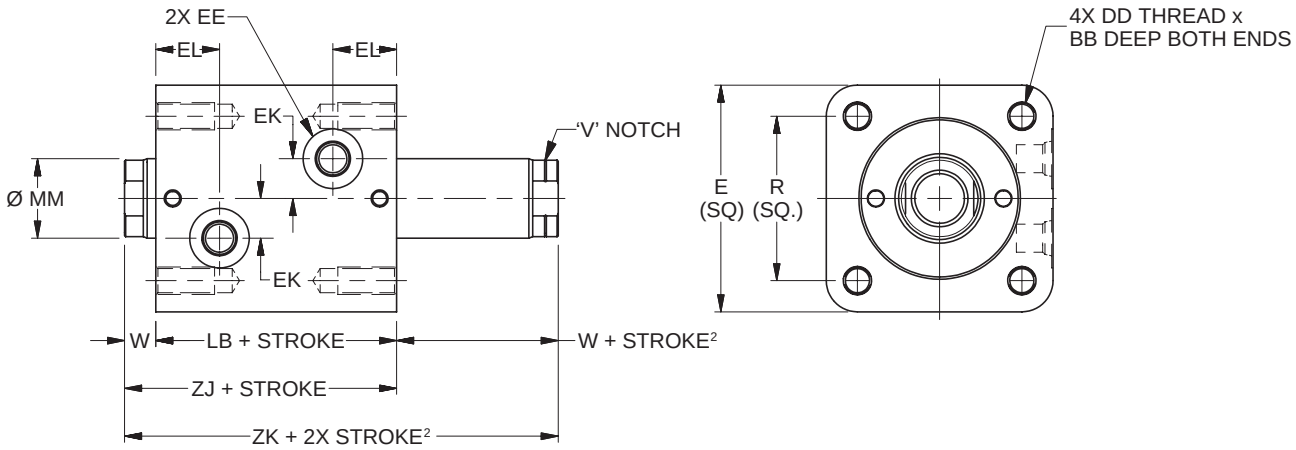

A Mount Double Rod End – Envelope and Mounting Dimensions

Bore Ø	BB	DD	E	EE			EK	EL	R	W²	Add Stroke		Add 2X Stroke
				SAE	NPT	BSP					LB	ZJ	ZK²
20	10.1	10-32 UNF - 2B	44	# 2[1]	1/8	G-1/8	6	16.5	30	8	43	51	59
25	10.5	10-32 UNF - 2B	50	# 2[1]	1/8	G-1/8	8	17.5	36	8	45	53	61
32	12.5	1/4-28 UNF - 2B	62	# 4	1/4	G-1/4	11	20.5	47	10	51	61	71
40	16.6	5/16-24 UNF - 2B	70	# 4	1/4	G-1/4	12	21	52	10	55	65	75
50	20.8	3/8-24 UNF - 2B	80	# 4	1/4	G-1/4	14	22.5	58	11	60	71	82
63	24.3	1/2-20 UNF - 2B	94	# 4	1/4	G-1/4	17	26	69	13	67	80	93
80	28.8	5/8-18 UNF - 2B	114	# 6	3/8	G-3/8	20	29.5	86	17	78	95	112

[1] Parker Triple-Lok™ Straight Thread Connector SAE #2 to ¼" 37° flare can be used when this port thread is required. Contact your local Parker Tube Fitting distributor and specify part number 4-2 F5OX.

[2] Minimum 'W + Stroke' on V notch rod side may apply. See minimum rod extension page for details.

A Mount Double Rod End – Rod Dimensions

Bore Ø	MM Rod Ø	Rod End														Rod Extension Dimensions		
		Style 9M²		Style 4M		Style 9A²		Style 4A		Style 8A		Style 55M						
		KK	A	KK	A	KK	A	KK	A	CC	A	AD	AE	AF	AM	C	D	NA
20	12	M8x1.25	10	M8x1	14	5/16-24	10	5/16-24	14	3/8-24	16	8	3	6	11	6	10	11
25	14	M10x1.5	12	M10x1.25	16	3/8-24	12	3/8-24	16	1/2-20	18	12	4	8	13	6	12	13
32	18	M12x1.75	15	M12x1.25	18	7/16-20	15	7/16-20	18	9/16-18	25	16	6	10	16	8	15	17
40	22	M16x2	20	M16x1.5	22	5/8-18	20	5/8-18	22	3/4-16	30	20	8	12	20	8	19	21
50	28	M20x2.5	24	M20x1.5	28	3/4-16	24	3/4-16	28	7/8-14	35	24	10	16	25	9	24	27
63	36	M27x3	30	M27x2	36	1-14	30	1-14	36	1 1/4-12	45	28	12	22	33	11	32	35
80	45	M33x3.5	35	M33x2	45	1 1/4-12	35	1 1/4-12	45	1 1/2-12	56	34	14	28	41	13	39	43

Rod End Dimensions

Thread Style 4

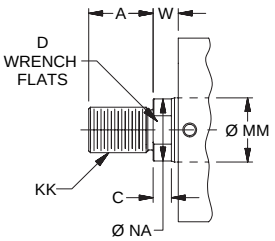

Thread Style 8

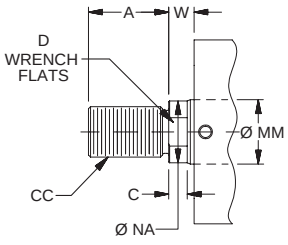

Thread Style 9

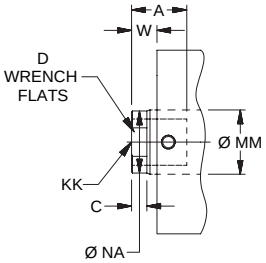

Style 55

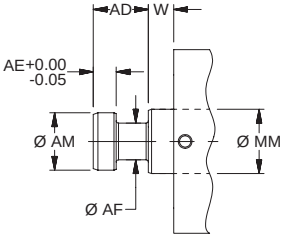

"Special" Thread Style 3

Special thread, extension, rod eye, blank, etc. are also available.

To order, specify "Style 3" and give desired dimensions for KK, A, & W. If otherwise special furnish dimensional sketch.

Styles AN and AR Imperial Tapped Both Ends Mounts with Pilot Gland or Pilot Cap – Single Rod End – 20mm to 80mm Bore Size

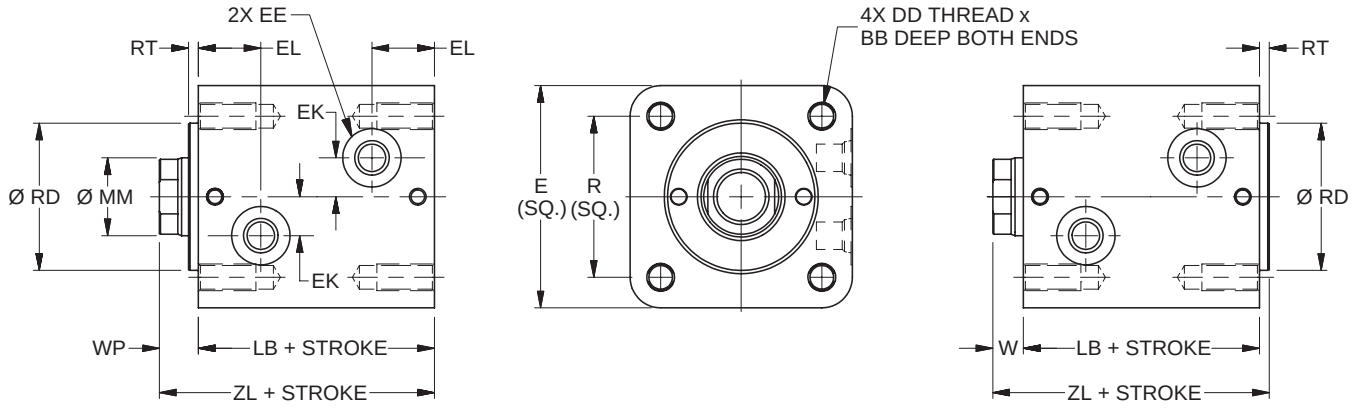

Style AN Imperial Tapped Both Ends Mount with Pilot Gland

Style AR Imperial Tapped Both Ends Mount with Pilot Cap

AN and AR Mount Single Rod End – Envelope and Mounting Dimensions

Bore Ø	BB	DD	E	EE			EK	EL	R	RD Ø f9	RT	W	WP	Add Stroke	
				SAE	NPT	BSP								LB	ZL
20	10.1	10-32 UNF - 2B	44	# 2[1]	1/8	G-1/8	6	16.5	30	24	3	8	11	43	54
25	10.5	10-32 UNF - 2B	50	# 2[1]	1/8	G-1/8	8	17.5	36	27	3	8	11	45	56
32	12.5	1/4-28 UNF - 2B	62	# 4	1/4	G-1/4	11	20.5	47	36	3	10	13	51	64
40	16.6	5/16-24 UNF - 2B	70	# 4	1/4	G-1/4	12	21	52	43	3	10	13	55	68
50	20.8	3/8-24 UNF - 2B	80	# 4	1/4	G-1/4	14	22.5	58	53	3	11	14	60	74
63	24.3	1/2-20 UNF - 2B	94	# 4	1/4	G-1/4	17	26	69	66	3	13	16	67	83
80	28.8	5/8-18 UNF - 2B	114	# 6	3/8	G-3/8	20	29.5	86	83	3	17	20	78	98

[1] Parker Triple-Lok™ Straight Thread Connector SAE #2 to ¼" 37° flare can be used when this port thread is required. Contact your local Parker Tube Fitting distributor and specify part number 4-2 F5OX.

AN and AR Mount Single Rod End – Rod Dimensions

Bore Ø	MM Rod Ø	Rod End														Rod Extension Dimensions		
		Style 9M		Style 4M		Style 9A		Style 4A		Style 8A		Style 55M						
		KK	A	KK	A	KK	A	KK	A	CC	A	AD	AE	AF	AM	C	D	NA
20	12	M8x1.25	10	M8x1	14	5/16-24	10	5/16-24	14	3/8-24	16	8	3	6	11	6	10	11
25	14	M10x1.5	12	M10x1.25	16	3/8-24	12	3/8-24	16	1/2-20	18	12	4	8	13	6	12	13
32	18	M12x1.75	15	M12x1.25	18	7/16-20	15	7/16-20	18	9/16-18	25	16	6	10	16	8	15	17
40	22	M16x2	20	M16x1.5	22	5/8-18	20	5/8-18	22	3/4-16	30	20	8	12	20	8	19	21
50	28	M20x2.5	24	M20x1.5	28	3/4-16	24	3/4-16	28	7/8-14	35	24	10	16	25	9	24	27
63	36	M27x3	30	M27x2	36	1-14	30	1-14	36	1 1/4-12	45	28	12	22	33	11	32	35
80	45	M33x3.5	35	M33x2	45	1 1/4-12	35	1 1/4-12	45	1 1/2-12	56	34	14	28	41	13	39	43

Rod End Dimensions

Thread Style 4

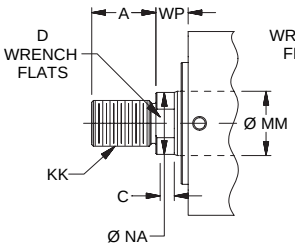

Thread Style 8

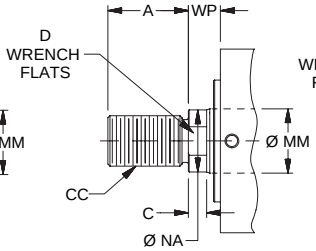

Thread Style 9

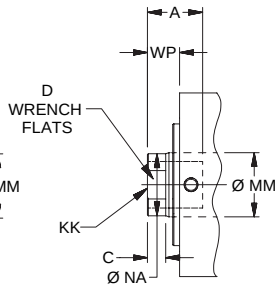

Style 55

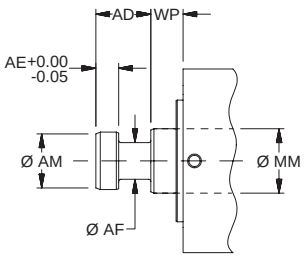

"Special" Thread Style 3

Special thread, extension, rod eye, blank, etc. are also available.

To order, specify "Style 3" and give desired dimensions for KK, A, & W (AR Mount) or WP (AN Mount) If otherwise special furnish dimensional sketch.

CHD

Style AN Imperial Tapped Both Ends Mount with Pilot Gland – Double Rod End – 20mm to 80mm Bore Size

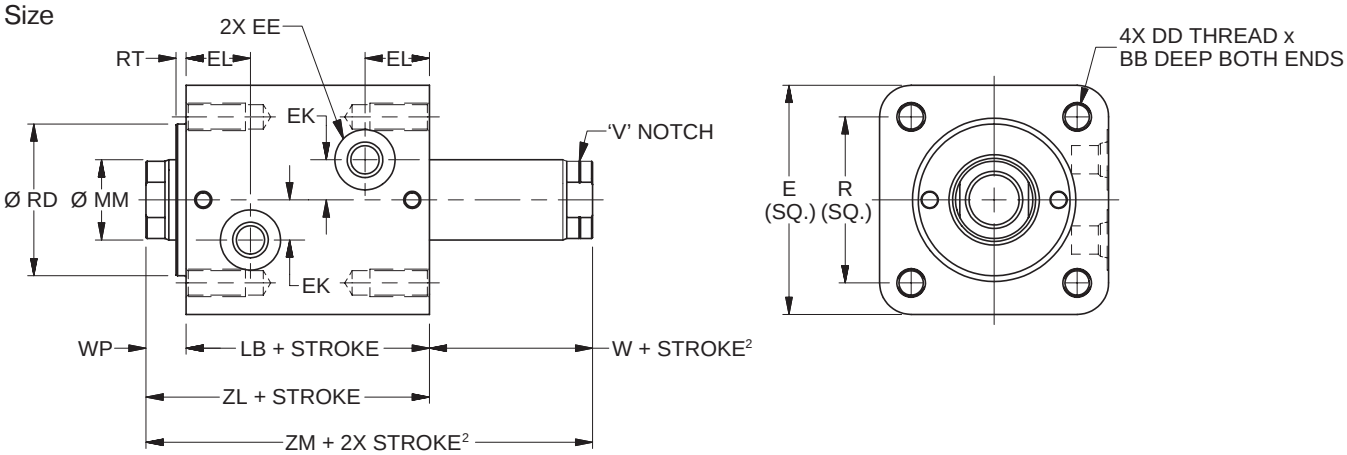

AN Mount Double Rod End – Envelope and Mounting Dimensions

Bore Ø	BB	DD	E	EE			EK	EL	R	RD Ø f9	RT	W²	WP	Add Stroke		Add 2X Stroke
				SAE	NPTF	BSP								LB	ZL	ZM²
20	10.1	10-32 UNF - 2B	44	# 2[1]	1/8	G-1/8	6	16.5	30	24	3	8	11	43	54	62
25	10.5	10-32 UNF - 2B	50	# 2[1]	1/8	G-1/8	8	17.5	36	27	3	8	11	45	56	64
32	12.5	1/4-28 UNF - 2B	62	# 4	1/4	G-1/4	11	20.5	47	36	3	10	13	51	64	74
40	16.6	5/16-24 UNF - 2B	70	# 4	1/4	G-1/4	12	21	52	43	3	10	13	55	68	78
50	20.8	3/8-24 UNF - 2B	80	# 4	1/4	G-1/4	14	22.5	58	53	3	11	14	60	74	85
63	24.3	1/2-20 UNF - 2B	94	# 4	1/4	G-1/4	17	26	69	66	3	13	16	67	83	96
80	28.8	5/8-18 UNF - 2B	114	# 6	3/8	G-3/8	20	29.5	86	83	3	17	20	78	98	115

[1] Parker Triple-Lok™ Straight Thread Connector SAE #2 to ¼" 37° flare can be used when this port thread is required. Contact your local Parker Tube Fitting distributor and specify part number 4-2 F5OX.

[2] Minimum 'W + Stroke' on V notch rod side may apply. See minimum rod extension page for details.

AN Mount Double Rod End – Rod Dimensions

Bore Ø	MM Rod Ø	Rod End														Rod Extension Dimensions		
		Style 9M²		Style 4M		Style 9A²		Style 4A		Style 8A		Style 55M						
		KK	A	KK	A	KK	A	KK	A	CC	A	AD	AE	AF	AM	C	D	NA
20	12	M8x1.25	10	M8x1	14	5/16-24	10	5/16-24	14	3/8-24	16	8	3	6	11	6	10	11
25	14	M10x1.5	12	M10x1.25	16	3/8-24	12	3/8-24	16	1/2-20	18	12	4	8	13	6	12	13
32	18	M12x1.75	15	M12x1.25	18	7/16-20	15	7/16-20	18	9/16-18	25	16	6	10	16	8	15	17
40	22	M16x2	20	M16x1.5	22	5/8-18	20	5/8-18	22	3/4-16	30	20	8	12	20	8	19	21
50	28	M20x2.5	24	M20x1.5	28	3/4-16	24	3/4-16	28	7/8-14	35	24	10	16	25	9	24	27
63	36	M27x3	30	M27x2	36	1-14	30	1-14	36	1 1/4-12	45	28	12	22	33	11	32	35
80	45	M33x3.5	35	M33x2	45	1 1/4-12	35	1 1/4-12	45	1 1/2-12	56	34	14	28	41	13	39	43

Rod End Dimensions

Thread Style 4

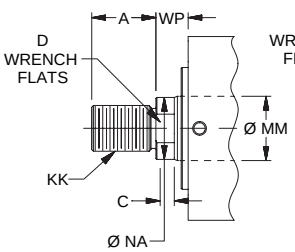

Thread Style 8

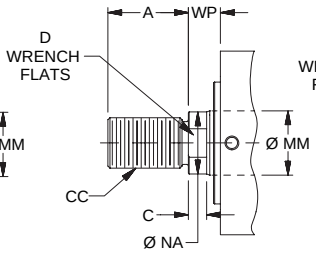

Thread Style 9

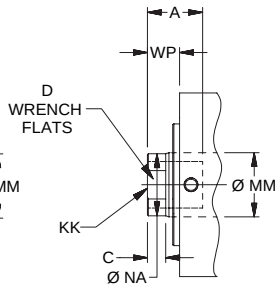

Style 55

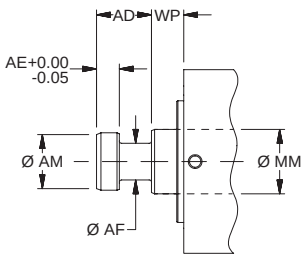

"Special" Thread Style 3

Special thread, extension, rod eye, blank, etc. are also available.

To order, specify "Style 3" and give desired dimensions for KK, A, & WP. If otherwise special furnish dimensional sketch.

Style M Metric Tapped Both Ends Mount – Single Rod End – 20mm to 80mm Bore Size

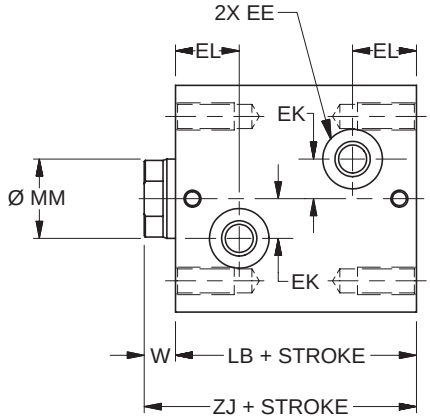

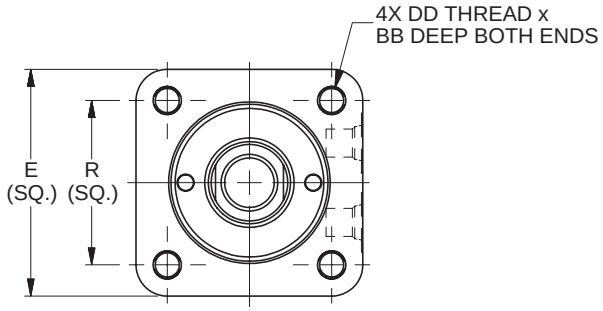

M Mount Single Rod End – Envelope and Mounting Dimensions

Bore Ø	BB	DD	E	EE			EK	EL	R	W	Add Stroke	
				SAE	NPT	BSP					LB	ZJ
20	10	M5x0.8 - 6H	44	# 2[1]	1/8	G-1/8	6	16.5	30	8	43	51
25	10.4	M5x0.8 - 6H	50	# 2[1]	1/8	G-1/8	8	17.5	36	8	45	53
32	12.5	M6x1 - 6H	62	# 4	1/4	G-1/4	11	20.5	47	10	51	61
40	16.6	M8x1.25 - 6H	70	# 4	1/4	G-1/4	12	21	52	10	55	65
50	20.7	M10x1.5 - 6H	80	# 4	1/4	G-1/4	14	22.5	58	11	60	71
63	24.9	M12x1.75 - 6H	94	# 4	1/4	G-1/4	17	26	69	13	67	80
80	29.0	M14x2 - 6H	114	# 6	3/8	G-3/8	20	29.5	86	17	78	95

[1] Parker Triple-Lok™ Straight Thread Connector SAE #2 to ¼" 37° flare can be used when this port thread is required. Contact your local Parker Tube Fitting distributor and specify part number 4-2 F5OX.

M Mount Single Rod End – Rod Dimensions

Bore Ø	MM Rod Ø	Rod End														Rod Extension Dimensions		
		Style 9M		Style 4M		Style 9A		Style 4A		Style 8A		Style 55M						
		KK	A	KK	A	KK	A	KK	A	CC	A	AD	AE	AF	AM	C	D	NA
20	12	M8x1.25	10	M8x1	14	5/16-24	10	5/16-24	14	3/8-24	16	8	3	6	11	6	10	11
25	14	M10x1.5	12	M10x1.25	16	3/8-24	12	3/8-24	16	1/2-20	18	12	4	8	13	6	12	13
32	18	M12x1.75	15	M12x1.25	18	7/16-20	15	7/16-20	18	9/16-18	25	16	6	10	16	8	15	17
40	22	M16x2	20	M16x1.5	22	5/8-18	20	5/8-18	22	3/4-16	30	20	8	12	20	8	19	21
50	28	M20x2.5	24	M20x1.5	28	3/4-16	24	3/4-16	28	7/8-14	35	24	10	16	25	9	24	27
63	36	M27x3	30	M27x2	36	1-14	30	1-14	36	1 1/4-12	45	28	12	22	33	11	32	35
80	45	M33x3.5	35	M33x2	45	1 1/4-12	35	1 1/4-12	45	1 1/2-12	56	34	14	28	41	13	39	43

Rod End Dimensions

Thread Style 4

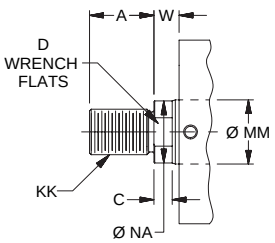

Thread Style 8

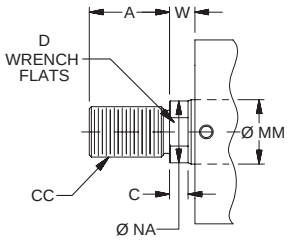

Thread Style 9

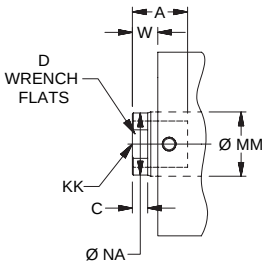

Style 55

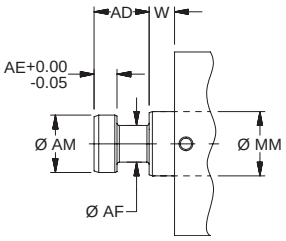

"Special" Thread Style 3

Special thread, extension, rod eye, blank, etc. are also available.

To order, specify "Style 3" and give desired dimensions for KK, A, & W. If otherwise special furnish dimensional sketch.

CHD

Style M Metric Tapped Both Ends Mount – Double Rod End – 20mm to 80mm Bore Size

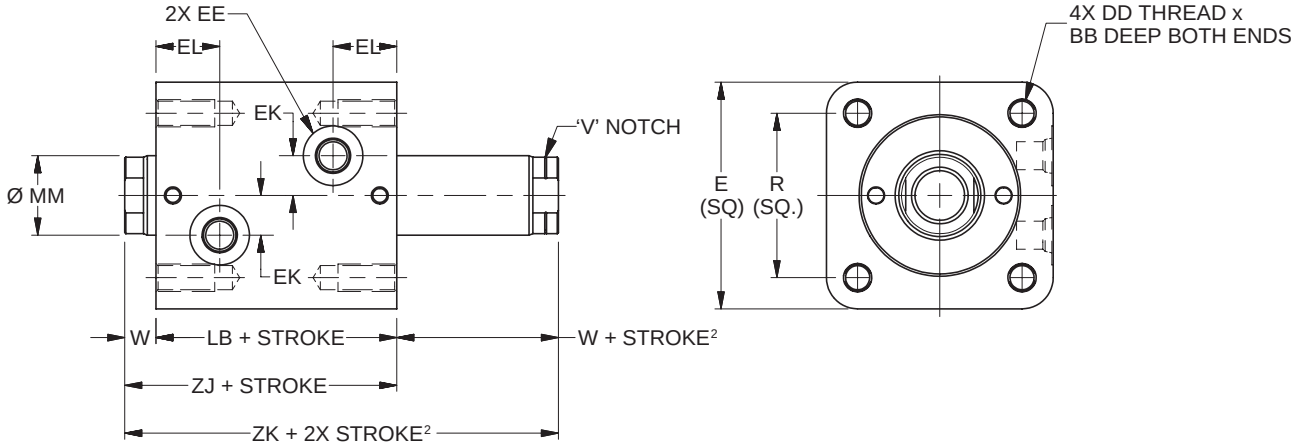

M Mount Double Rod End – Envelope and Mounting Dimensions

Bore	BB	DD	E	EE			EK	EL	R	W²	Add Stroke		Add 2X Stroke
				SAE	NPT	BSP					LB	ZJ	ZK²
20	10	M5x0.8 - 6H	44	# 2[1]	1/8	G-1/8	6	16.5	30	8	43	51	59
25	10.4	M5x0.8 - 6H	50	# 2[1]	1/8	G-1/8	8	17.5	36	8	45	53	61
32	12.5	M6x1 - 6H	62	# 4	1/4	G-1/4	11	20.5	47	10	51	61	71
40	16.6	M8x1.25 - 6H	70	# 4	1/4	G-1/4	12	21	52	10	55	65	75
50	20.7	M10x1.5 - 6H	80	# 4	1/4	G-1/4	14	22.5	58	11	60	71	82
63	24.9	M12x1.75 - 6H	94	# 4	1/4	G-1/4	17	26	69	13	67	80	93
80	29.0	M14x2 - 6H	114	# 6	3/8	G-3/8	20	29.5	86	17	78	95	112

[1] Parker Triple-Lok™ Straight Thread Connector SAE #2 to ¼" 37° flare can be used when this port thread is required. Contact your local Parker Tube Fitting distributor and specify part number 4-2 F5OX.

[2] Minimum 'W + Stroke' on V notch rod side may apply. See minimum rod extension page for details.

M Mount Double Rod End – Rod Dimensions

Bore Ø	MM Rod Ø	Rod End														Rod Extension Dimensions		
		Style 9M²		Style 4M		Style 9A²		Style 4A		Style 8A		Style 55M						
		KK	A	KK	A	KK	A	KK	A	CC	A	AD	AE	AF	AM	C	D	NA
20	12	M8x1.25	10	M8x1	14	5/16-24	10	5/16-24	14	3/8-24	16	8	3	6	11	6	10	11
25	14	M10x1.5	12	M10x1.25	16	3/8-24	12	3/8-24	16	1/2-20	18	12	4	8	13	6	12	13
32	18	M12x1.75	15	M12x1.25	18	7/16-20	15	7/16-20	18	9/16-18	25	16	6	10	16	8	15	17
40	22	M16x2	20	M16x1.5	22	5/8-18	20	5/8-18	22	3/4-16	30	20	8	12	20	8	19	21
50	28	M20x2.5	24	M20x1.5	28	3/4-16	24	3/4-16	28	7/8-14	35	24	10	16	25	9	24	27
63	36	M27x3	30	M27x2	36	1-14	30	1-14	36	1 1/4-12	45	28	12	22	33	11	32	35
80	45	M33x3.5	35	M33x2	45	1 1/4-12	35	1 1/4-12	45	1 1/2-12	56	34	14	28	41	13	39	43

Rod End Dimensions

Thread Style 4

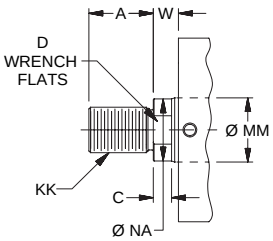

Thread Style 8

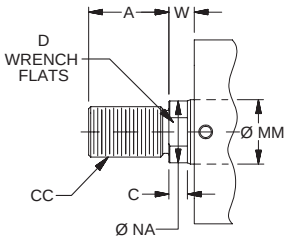

Thread Style 9

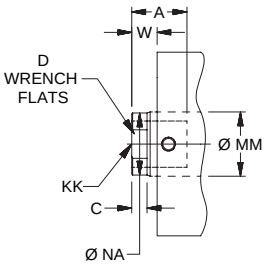

Style 55

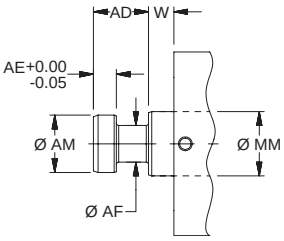

"Special" Thread Style 3

Special thread, extension, rod eye, blank, etc. are also available.

To order, specify "Style 3" and give desired dimensions for KK, A, & W. If otherwise special furnish dimensional sketch.

Styles MN and MR Metric Tapped Both Ends Mounts with Pilot Gland or Pilot Cap – Single Rod End – 20mm to 80mm Bore Size

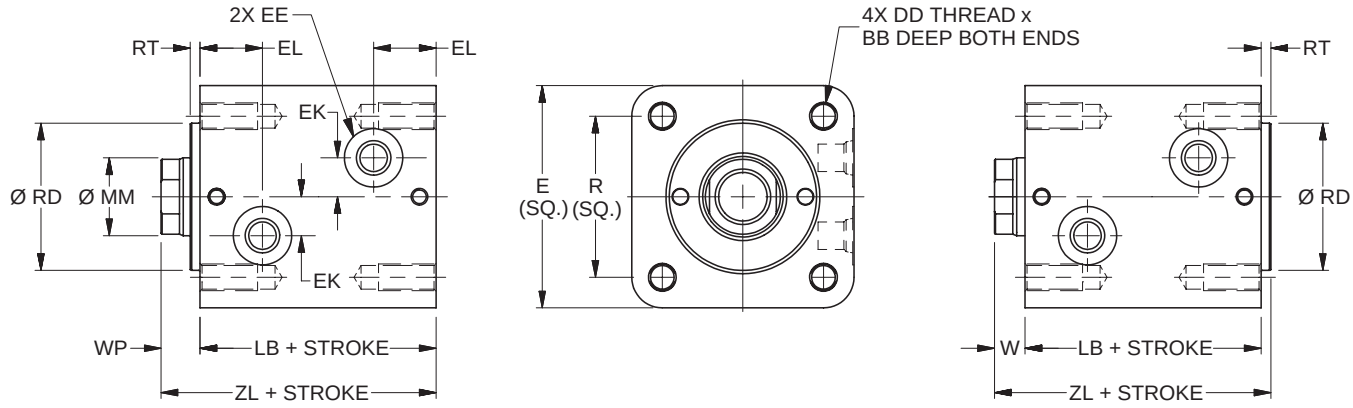

Style MN Metric Tapped Both Ends Mount with Pilot Gland

Style MR Metric Tapped Both Ends Mount with Pilot Cap

MN and MR Mount Single Rod End – Envelope and Mounting Dimensions

Bore	BB	DD	E	EE			EK	EL	R	RD Ø f9	RT	W	WP	Add Stroke	
				SAE	NPT	BSP								LB	ZL
20	10	M5x0.8 - 6H	44	# 2[1]	1/8	G-1/8	6	16.5	30	24	3	8	11	43	54
25	10.4	M5x0.8 - 6H	50	# 2[1]	1/8	G-1/8	8	17.5	36	27	3	8	11	45	56
32	12.5	M6x1 - 6H	62	# 4	1/4	G-1/4	11	20.5	47	36	3	10	13	51	64
40	16.6	M8x1.25 - 6H	70	# 4	1/4	G-1/4	12	21	52	43	3	10	13	55	68
50	20.7	M10x1.5 - 6H	80	# 4	1/4	G-1/4	14	22.5	58	53	3	11	14	60	74
63	24.9	M12x1.75 - 6H	94	# 4	1/4	G-1/4	17	26	69	66	3	13	16	67	83
80	29.0	M14x2 - 6H	114	# 6	3/8	G-3/8	20	29.5	86	83	3	17	20	78	98

[1] Parker Triple-Lok™ Straight Thread Connector SAE #2 to ¼" 37° flare can be used when this port thread is required. Contact your local Parker Tube Fitting distributor and specify part number 4-2 F5OX.

MN and MR Mount Single Rod End – Rod Dimensions

Bore Ø	MM Rod Ø	Rod End														Rod Extension Dimensions		
		Style 9M		Style 4M		Style 9A		Style 4A		Style 8A		Style 55M						
		KK	A	KK	A	KK	A	KK	A	CC	A	AD	AE	AF	AM	C	D	NA
20	12	M8x1.25	10	M8x1	14	5/16-24	10	5/16-24	14	3/8-24	16	8	3	6	11	6	10	11
25	14	M10x1.5	12	M10x1.25	16	3/8-24	12	3/8-24	16	1/2-20	18	12	4	8	13	6	12	13
32	18	M12x1.75	15	M12x1.25	18	7/16-20	15	7/16-20	18	9/16-18	25	16	6	10	16	8	15	17
40	22	M16x2	20	M16x1.5	22	5/8-18	20	5/8-18	22	3/4-16	30	20	8	12	20	8	19	21
50	28	M20x2.5	24	M20x1.5	28	3/4-16	24	3/4-16	28	7/8-14	35	24	10	16	25	9	24	27
63	36	M27x3	30	M27x2	36	1-14	30	1-14	36	1 1/4-12	45	28	12	22	33	11	32	35
80	45	M33x3.5	35	M33x2	45	1 1/4-12	35	1 1/4-12	45	1 1/2-12	56	34	14	28	41	13	39	43

Rod End Dimensions

Thread Style 4

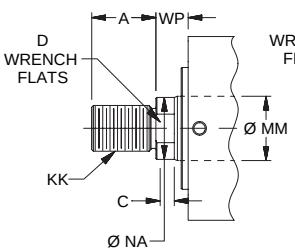

Thread Style 8

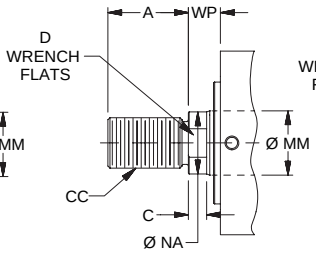

Thread Style 9

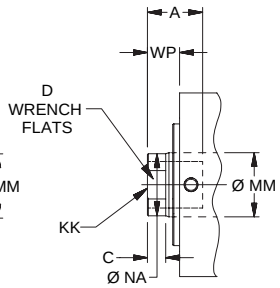

Style 55

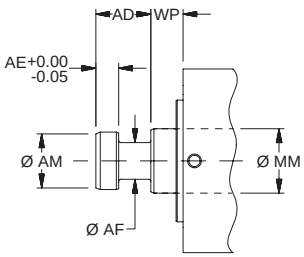

"Special" Thread Style 3

Special thread, extension, rod eye, blank, etc. are also available.

To order, specify "Style 3" and give desired dimensions for KK, A, & W (MR Mount) or WP (MN Mount) If otherwise special furnish dimensional sketch.

CHD

Style MN Metric Tapped Both Ends Mount with Pilot Gland – Double Rod End – 20mm to 80mm Bore Size

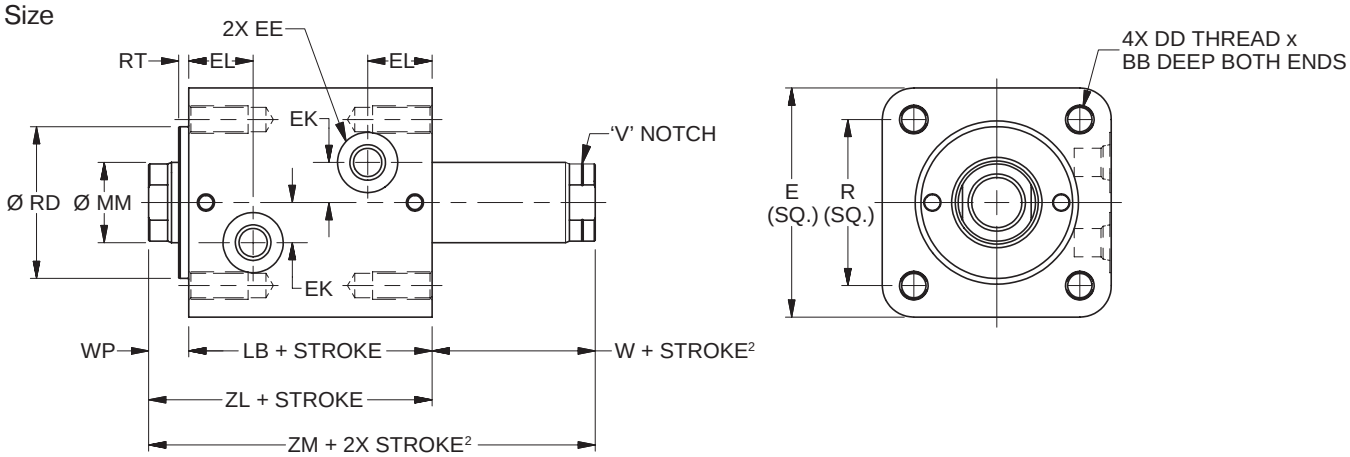

MN Mount Double Rod End – Envelope and Mounting Dimensions

Bore Ø	BB	DD	E	EE			EK	EL	R	RD Ø f9	RT	W²	WP	Add Stroke		Add 2X Stroke
				SAE	NPTF	BSP								LB	ZL	ZM²
20	10	M5x0.8 - 6H	44	# 2[1]	1/8	G-1/8	6	16.5	30	24	3	8	11	43	54	62
25	10.4	M5x0.8 - 6H	50	# 2[1]	1/8	G-1/8	8	17.5	36	27	3	8	11	45	56	64
32	12.5	M6x1 - 6H	62	# 4	1/4	G-1/4	11	20.5	47	36	3	10	13	51	64	74
40	16.6	M8x1.25 - 6H	70	# 4	1/4	G-1/4	12	21	52	43	3	10	13	55	68	78
50	20.7	M10x1.5 - 6H	80	# 4	1/4	G-1/4	14	22.5	58	53	3	11	14	60	74	85
63	24.9	M12x1.75 - 6H	94	# 4	1/4	G-1/4	17	26	69	66	3	13	16	67	83	96
80	29.0	M14x2 - 6H	114	# 6	3/8	G-3/8	20	29.5	86	83	3	17	20	78	98	115

[1] Parker Triple-Lok™ Straight Thread Connector SAE #2 to ¼" 37° flare can be used when this port thread is required. Contact your local Parker Tube Fitting distributor and specify part number 4-2 F5OX.

[2] Minimum 'W + Stroke' on V notch rod side may apply. See minimum rod extension page for details.

MN Mount Double Rod End – Rod Dimensions

Bore Ø	MM Rod Ø	Rod End														Rod Extension Dimensions		
		Style 9M²		Style 4M		Style 9A²		Style 4A		Style 8A		Style 55M						
		KK	A	KK	A	KK	A	KK	A	CC	A	AD	AE	AF	AM	C	D	NA
20	12	M8x1.25	10	M8x1	14	5/16-24	10	5/16-24	14	3/8-24	16	8	3	6	11	6	10	11
25	14	M10x1.5	12	M10x1.25	16	3/8-24	12	3/8-24	16	1/2-20	18	12	4	8	13	6	12	13
32	18	M12x1.75	15	M12x1.25	18	7/16-20	15	7/16-20	18	9/16-18	25	16	6	10	16	8	15	17
40	22	M16x2	20	M16x1.5	22	5/8-18	20	5/8-18	22	3/4-16	30	20	8	12	20	8	19	21
50	28	M20x2.5	24	M20x1.5	28	3/4-16	24	3/4-16	28	7/8-14	35	24	10	16	25	9	24	27
63	36	M27x3	30	M27x2	36	1-14	30	1-14	36	1 1/4-12	45	28	12	22	33	11	32	35
80	45	M33x3.5	35	M33x2	45	1 1/4-12	35	1 1/4-12	45	1 1/2-12	56	34	14	28	41	13	39	43

Rod End Dimensions

Thread Style 4

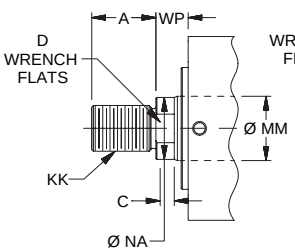

Thread Style 8

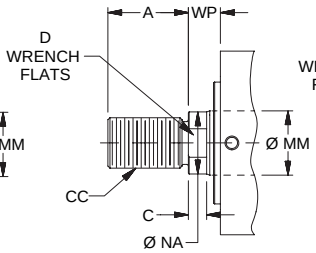

Thread Style 9

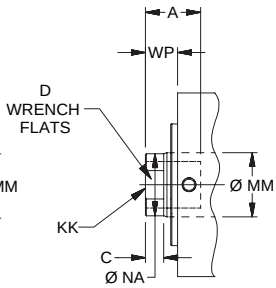

Style 55

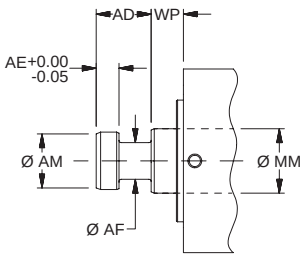

"Special" Thread Style 3

Special thread, extension, rod eye, blank, etc. are also available.

To order, specify "Style 3" and give desired dimensions for KK, A, & WP. If otherwise special furnish dimensional sketch.

Styles J Rectangular Head Flange & H Rectangular Cap Flange Mounts – Single Rod End – 20mm to 80mm Bore Size

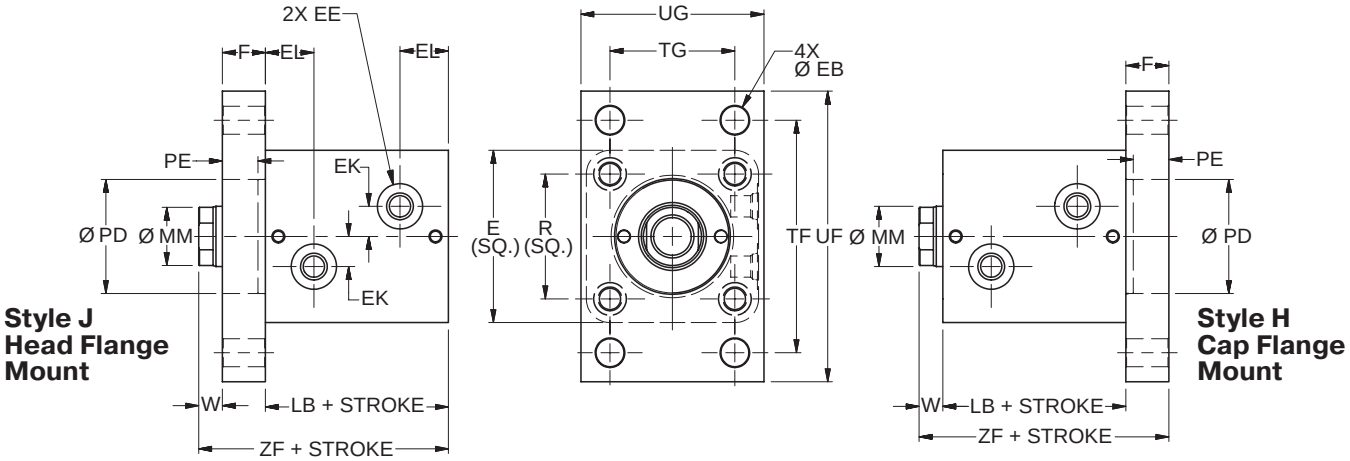

J & H Mounts Single Rod End – Envelope and Mounting Dimensions

Bore Ø	E	EE			EK	EL	F	EB Ø	PD Ø H9	PE	R	TF	TG	UF	UG	W	Add Stroke	
		SAE	NPTF	BSP													LB	ZF
20	44	#2[1]	1/8	G-1/8	6	16.5	10	5.5	24	7	30	60	30	75	46	8	43	61
25	50	#2[1]	1/8	G-1/8	8	17.5	12	5.5	27	9	36	66	36	80	52	8	45	65
32	62	#4	1/4	G-1/4	11	20.5	12	6.8	36	9	47	80	40	95	62	10	51	73
40	70	#4	1/4	G-1/4	12	21	16	11	43	13	52	96	46	118	70	10	55	81
50	80	#4	1/4	G-1/4	14	22.5	20	13.5	53	17	58	108	58	135	85	11	60	91
63	94	#4	1/4	G-1/4	17	26	20	15	66	17	69	124	65	150	98	13	67	100
80	114	#6	3/8	G-3/8	20	29.5	25	17	83	21	86	154	87	185	118	17	78	120

[1] Parker Triple-Lok™ Straight Thread Connector SAE #2 to ¼" 37° flare can be used when this port thread is required. Contact your local Parker Tube Fitting distributor and specify part number 4-2 F5OX.

J & H Mounts Single Rod End – Rod Dimensions

Bore Ø	MM Rod Ø	Rod End														Rod Extension Dimensions		
		Style 9M		Style 4M		Style 9A		Style 4A		Style 8A		Style 55M						
		KK	A	KK	A	KK	A	KK	A	CC	A	AD	AE	AF	AM	C	D	NA
20	12	M8x1.25	10	M8x1	14	5/16-24	10	5/16-24	14	3/8-24	16	8	3	6	11	6	10	11
25	14	M10x1.5	12	M10x1.25	16	3/8-24	12	3/8-24	16	1/2-20	18	12	4	8	13	6	12	13
32	18	M12x1.75	15	M12x1.25	18	7/16-20	15	7/16-20	18	9/16-18	25	16	6	10	16	8	15	17
40	22	M16x2	20	M16x1.5	22	5/8-18	20	5/8-18	22	3/4-16	30	20	8	12	20	8	19	21
50	28	M20x2.5	24	M20x1.5	28	3/4-16	24	3/4-16	28	7/8-14	35	24	10	16	25	9	24	27
63	36	M27x3	30	M27x2	36	1-14	30	1-14	36	1 1/4-12	45	28	12	22	33	11	32	35
80	45	M33x3.5	35	M33x2	45	1 1/4-12	35	1 1/4-12	45	1 1/2-12	56	34	14	28	41	13	39	43

Rod End Dimensions

Thread Style 4

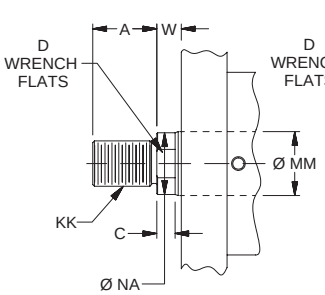

Thread Style 8

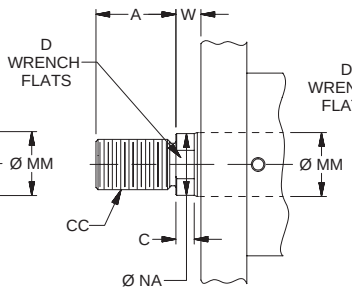

Thread Style 9

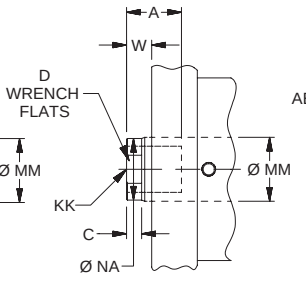

Style 55

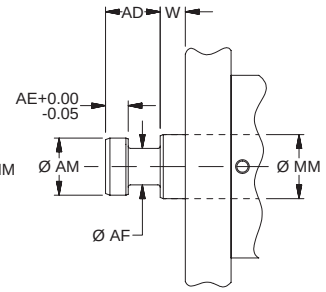

"Special" Thread Style 3

Special thread, extension, rod eye, blank, etc. are also available.

To order, specify "Style 3" and give desired dimensions for KK, A, & W. If otherwise special furnish dimensional sketch.

CHD

Style J Rectangular Head Flange Mount – Double Rod End – 20mm to 80mm Bore Size

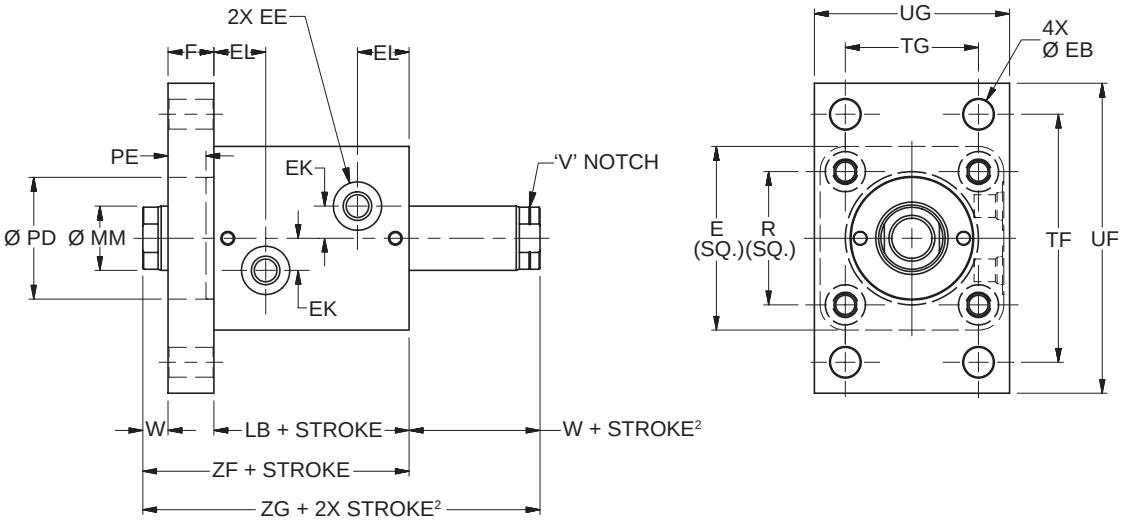

J Mount Double Rod End – Envelope and Mounting Dimensions

Bore Ø	E	EE			EK	EL	F	EB Ø	PD Ø H9	PE	R	TF	TG	UF	UG	W²	Add Stroke		Add 2X Stroke
		SAE	NPTF	BSP													LB	ZF	ZG²
20	44	#2[1]	1/8	G-1/8	6	16.5	10	5.5	24	7	30	60	30	75	46	8	43	61	69
25	50	#2[1]	1/8	G-1/8	8	17.5	12	5.5	27	9	36	66	36	80	52	8	45	65	73
32	62	#4	1/4	G-1/4	11	20.5	12	6.8	36	9	47	80	40	95	62	10	51	73	83
40	70	#4	1/4	G-1/4	12	21	16	11	43	13	52	96	46	118	70	10	55	81	91
50	80	#4	1/4	G-1/4	14	22.5	20	13.5	53	17	58	108	58	135	85	11	60	91	102
63	94	#4	1/4	G-1/4	17	26	20	15	66	17	69	124	65	150	98	13	67	100	113
80	114	#6	3/8	G-3/8	20	29.5	25	17	83	21	86	154	87	185	118	17	78	120	137

[1] Parker Triple-Lok™ Straight Thread Connector SAE #2 to ¼" 37° flare can be used when this port thread is required. Contact your local Parker Tube Fitting distributor and specify part number 4-2 F5OX.

[2] Minimum 'W + Stroke' on V notch rod side may apply. See minimum rod extension page for details.

J Mount Double Rod End – Rod Dimensions

Bore Ø	MM Rod Ø	Rod End														Rod Extension Dimensions		
		Style 9M²		Style 4M		Style 9A²		Style 4A		Style 8A		Style 55M						
		KK	A	KK	A	KK	A	KK	A	CC	A	AD	AE	AF	AM	C	D	NA
20	12	M8x1.25	10	M8x1	14	5/16-24	10	5/16-24	14	3/8-24	16	8	3	6	11	6	10	11
25	14	M10x1.5	12	M10x1.25	16	3/8-24	12	3/8-24	16	1/2-20	18	12	4	8	13	6	12	13
32	18	M12x1.75	15	M12x1.25	18	7/16-20	15	7/16-20	18	9/16-18	25	16	6	10	16	8	15	17
40	22	M16x2	20	M16x1.5	22	5/8-18	20	5/8-18	22	3/4-16	30	20	8	12	20	8	19	21
50	28	M20x2.5	24	M20x1.5	28	3/4-16	24	3/4-16	28	7/8-14	35	24	10	16	25	9	24	27
63	36	M27x3	30	M27x2	36	1-14	30	1-14	36	1 1/4-12	45	28	12	22	33	11	32	35
80	45	M33x3.5	35	M33x2	45	1 1/4-12	35	1 1/4-12	45	1 1/2-12	56	34	14	28	41	13	39	43

Rod End Dimensions

Thread Style 4

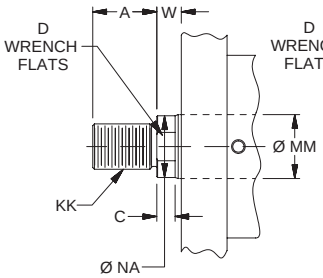

Thread Style 8

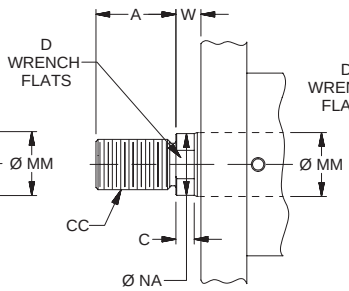

Thread Style 9

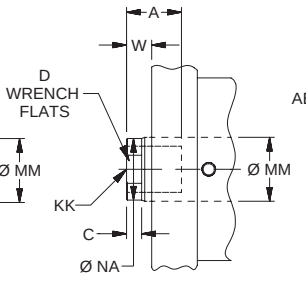

Style 55

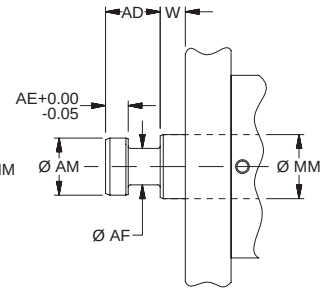

"Special" Thread Style 3

Special thread, extension, rod eye, blank, etc. are also available.

To order, specify "Style 3" and give desired dimensions for KK, A, & W. If otherwise special furnish dimensional sketch.

Style C Foot Mount – Single Rod End – 25mm to 63mm Bore Size

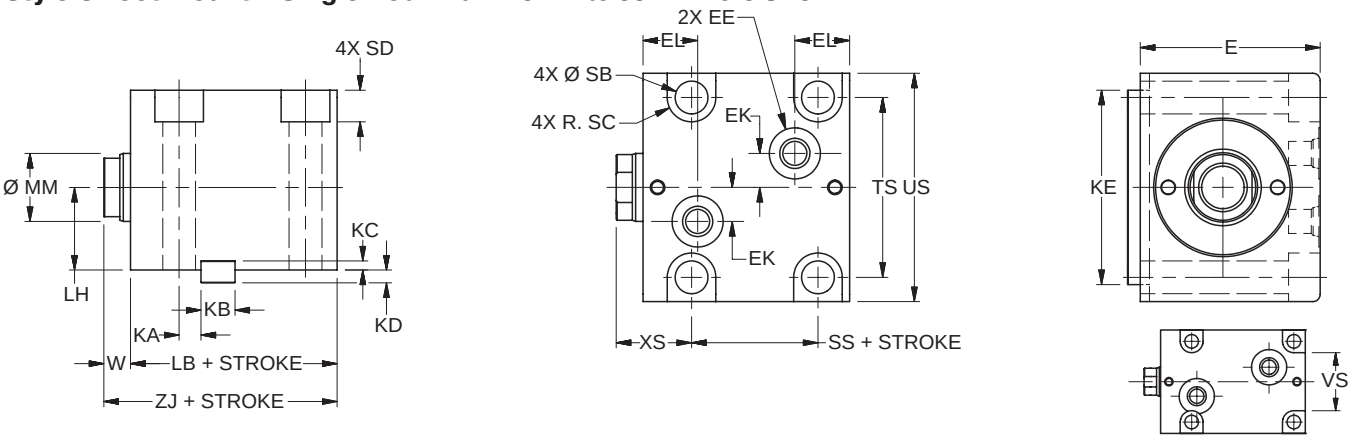

25mm & 32mm BOLT HOLE DETAIL

C Mount Single Rod End – Envelope and Mounting Dimensions

Bore Ø	E	ED Ø	EE				EF	EK	EL	EM	KA	KB	KC	KD	KE
			SAE	NPT	BSP	Mani-fold									
25	45	10	# 2[1]	1/8	G-1/8	3	2	7	17.5	15.8	8.5	8	3.25	3.75	45
32	56	10	# 4	1/4	G-1/4	3	2	11	20.5	18.5	8	12	3.25	4.75	63
40	64	12	# 4	1/4	G-1/4	3	2	12	21	19	8	12	3.25	4.75	70
50	74	15	# 4	1/4	G-1/4	4	2	14	22.5	21	9	14	3.75	5.25	80
63	89	15	# 4	1/4	G-1/4	4	2	17	26	24.5	11	16	4.25	5.75	100

[1] Parker Triple-Lok™ Straight Thread Connector SAE #2 to ¼" 37° flare can be used when this port thread is required. Contact your local Parker Tube Fitting distributor and specify part number 4-2 F5OX.

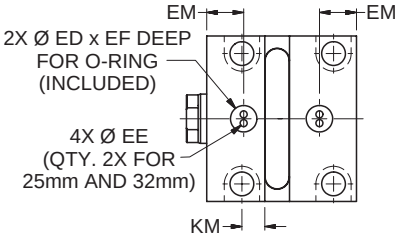

MANIFOLD PORT OPTION DETAIL
CAUTION: KM key slot location is for manifold ports only. Do not use for top mounted ports. KA key slot location is for top mounted ports. Do not use for manifold ports.

C Mount Single Rod End – Rod Dimensions

Bore Ø	KM	LH	SB Ø	SC	SD	TS	US	VS	W	XS	Add Stroke			Min. Stroke For M Port
											LB	SS	ZJ	
25	8.5	20	6.8	5.5	6.5	39	50	28	8	23	45	24.5	53	10
32	8	25	9	7	8.6	56	70	42	10	30	51	24	61	15
40	8	29	11	8.75	10.8	62	80	-	10	30	55	23	65	15
50	13	34	13.5	10	13	74	94	-	11	31	60	27	71	20
63	15.5	42	16	11.5	15.2	90	114	-	13	33	67	32	80	20

C Mount Single Rod End – Rod Dimensions

Bore Ø	MM Rod Ø	Rod End														Rod Extension Dimensions		
		Style 9M		Style 4M		Style 9A		Style 4A		Style 8A		Style 55M						
		KK	A	KK	A	KK	A	KK	A	CC	A	AD	AE	AF	AM	C	D	NA
25	14	M10x1.5	12	M10x1.25	16	3/8-24	12	3/8-24	16	1/2-20	18	12	4	8	13	6	12	13
32	18	M12x1.75	15	M12x1.25	18	7/16-20	15	7/16-20	18	9/16-18	25	16	6	10	16	8	15	17
40	22	M16x2	20	M16x1.5	22	5/8-18	20	5/8-18	22	3/4-16	30	20	8	12	20	8	19	21
50	28	M20x2.5	24	M20x1.5	28	3/4-16	24	3/4-16	28	7/8-14	35	24	10	16	25	9	24	27
63	36	M27x3	30	M27x2	36	1-14	30	1-14	36	1 1/4-12	45	28	12	22	33	11	32	35

Rod End Dimensions

Thread Style 4

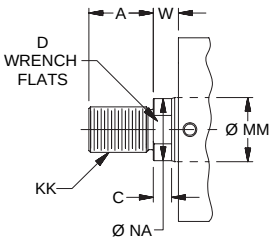

Thread Style 8

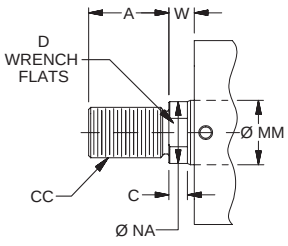

Thread Style 9

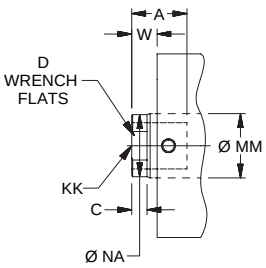

Style 55

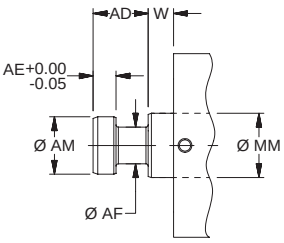

"Special" Thread Style 3

Special thread, extension, rod eye, blank, etc. are also available.

To order, specify "Style 3" and give desired dimensions for KK, A, & W. If otherwise special furnish dimensional sketch.

CHD

Style C Foot Mount – Double Rod End – 25mm to 63mm Bore Size

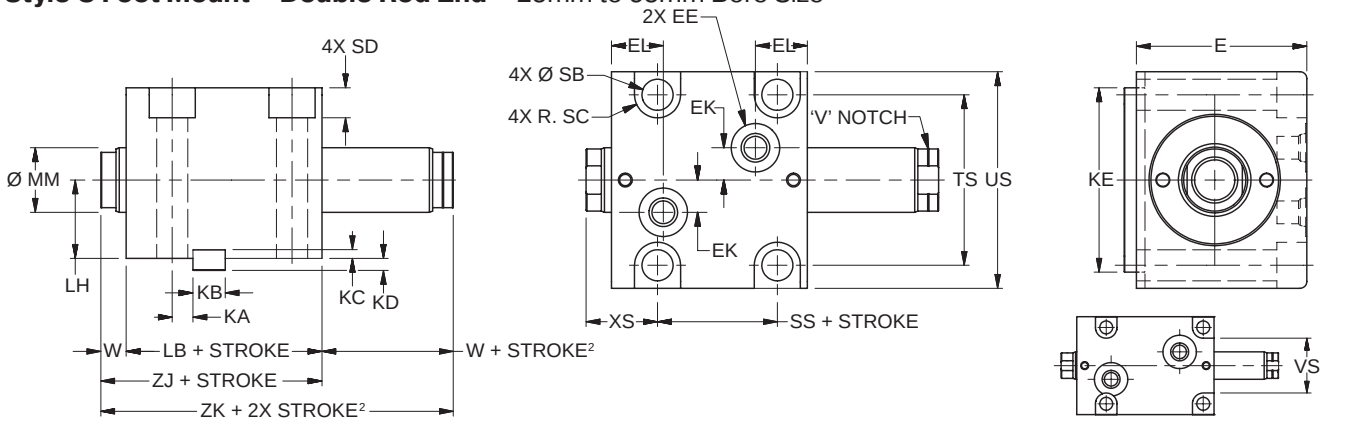

C Mount Double Rod End – Envelope and Mounting Dimensions

Bore Ø	E	ED Ø	EE				EF	EK	EL	EM	KA	KB	KC	KD	KE
			SAE	NPT	BSP	Mani-fold									
25	45	10	# 2[1]	1/8	G-1/8	3	2	7	17.5	15.8	8.5	8	3.25	3.75	45
32	56	10	# 4	1/4	G-1/4	3	2	11	20.5	18.5	8	12	3.25	4.75	63
40	64	12	# 4	1/4	G-1/4	3	2	12	21	19	8	12	3.25	4.75	70
50	74	15	# 4	1/4	G-1/4	4	2	14	22.5	21	9	14	3.75	5.25	80
63	89	15	# 4	1/4	G-1/4	4	2	17	26	24.5	11	16	4.25	5.75	100

[1] Parker Triple-Lok™ Straight Thread Connector SAE #2 to ¼" 37° flare can be used when this port thread is required. Contact your local Parker Tube Fitting distributor and specify part number 4-2 F5OX.

[2] Minimum 'W + Stroke' on V notch rod side may apply. See minimum rod extension page for details.

25mm & 32mm BOLT HOLE DETAIL

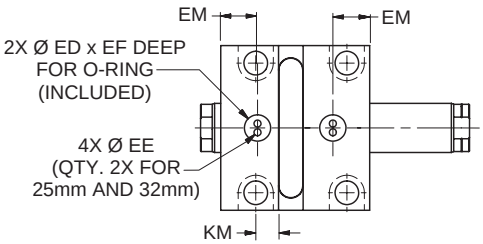

MANIFOLD PORT OPTION DETAIL
CAUTION: KM key slot location is for manifold ports only. Do not use for top mounted ports. KA key slot location is for top mounted ports. Do not use for manifold ports.

C Mount Double Rod End – Rod Dimensions

Bore Ø	KM	LH	SB Ø	SC	SD	TS	US	VS	W²	XS	Add Stroke			Add 2X Stroke	Min. Stroke For M Port
											LB	SS	ZJ	ZK²	
25	8.5	20	6.8	5.5	6.5	39	50	28	8	23	45	24.5	53	61	10
32	8	25	9	7	8.6	56	70	42	10	30	51	24	61	71	15
40	8	29	11	8.75	10.8	62	80	-	10	30	55	23	65	75	15
50	13	34	13.5	10	13	74	94	-	11	31	60	27	71	82	20
63	15.5	42	16	11.5	15.2	90	114	-	13	33	67	32	80	93	20

C Mount Single Rod End – Rod Dimensions

Bore Ø	MM Rod Ø	Rod End														Rod Extension Dimensions		
		Style 9M²		Style 4M		Style 9A²		Style 4A		Style 8A		Style 55M						
		KK	A	KK	A	KK	A	KK	A	CC	A	AD	AE	AF	AM	C	D	NA
25	14	M10x1.5	12	M10x1.25	16	3/8-24	12	3/8-24	16	1/2-20	18	12	4	8	13	6	12	13
32	18	M12x1.75	15	M12x1.25	18	7/16-20	15	7/16-20	18	9/16-18	25	16	6	10	16	8	15	17
40	22	M16x2	20	M16x1.5	22	5/8-18	20	5/8-18	22	3/4-16	30	20	8	12	20	8	19	21
50	28	M20x2.5	24	M20x1.5	28	3/4-16	24	3/4-16	28	7/8-14	35	24	10	16	25	9	24	27
63	36	M27x3	30	M27x2	36	1-14	30	1-14	36	1 1/4-12	45	28	12	22	33	11	32	35

Rod End Dimensions

Thread Style 4

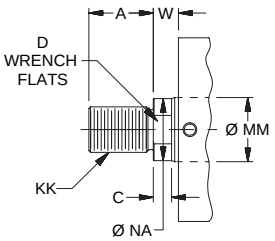

Thread Style 8

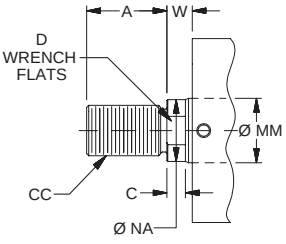

Thread Style 9

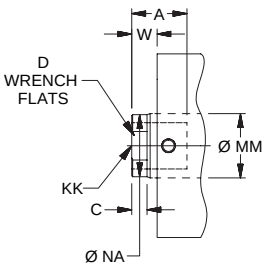

Style 55

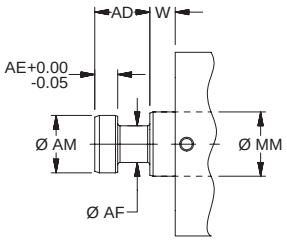

"Special" Thread Style 3

Special thread, extension, rod eye, blank, etc. are also available.

To order, specify "Style 3" and give desired dimensions for KK, A, & W. If otherwise special furnish dimensional sketch.

Style CN Foot Mount with Pilot Gland – Single Rod End – 25mm to 63mm Bore Size

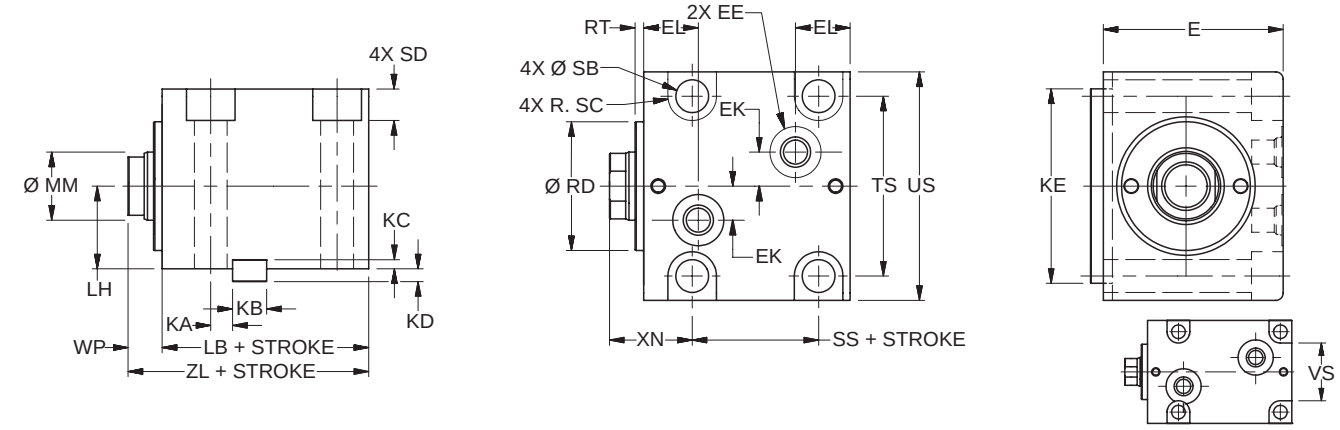

25mm & 32mm BOLT HOLE DETAIL

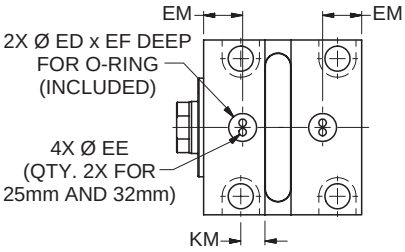

MANIFOLD PORT OPTION DETAIL
CAUTION: KM key slot location is for manifold ports only. Do not use for top mounted ports. KA key slot location is for top mounted ports. Do not use for manifold ports.

CN Mount Single Rod End – Envelope and Mounting Dimensions

Bore Ø	E	ED Ø	EE				EF	EK	EL	EM	KA	KB	KC	KD	KE
			SAE	NPT	BSP	Man-ifold									
25	45	10	# 2[1]	1/8	G-1/8	3	2	7	17.5	15.8	8.5	8	3.25	3.75	45
32	56	10	# 4	1/4	G-1/4	3	2	11	20.5	18.5	8	12	3.25	4.75	63
40	64	12	# 4	1/4	G-1/4	3	2	12	21	19	8	12	3.25	4.75	70
50	74	15	# 4	1/4	G-1/4	4	2	14	22.5	21	9	14	3.75	5.25	80
63	89	15	# 4	1/4	G-1/4	4	2	17	26	24.5	11	16	4.25	5.75	100

[1] Parker Triple-Lok™ Straight Thread Connector SAE #2 to ¼" 37° flare can be used when this port thread is required. Contact your local Parker Tube Fitting distributor and specify part number 4-2 F5OX.

CN Mount Single Rod End – Rod Dimensions

Bore Ø	KM	LH	RD Ø f9	RT	SB Ø	SC	SD	TS	US	VS	WP	XN	Add Stroke			Min. Stroke For M Port
													LB	SS	ZL	
25	8.5	20	27	3	6.8	5.5	6.5	39	50	28	11	26	45	24.5	56	10
32	8	25	36	3	9	7	8.6	56	70	42	13	33	51	24	64	15
40	8	29	43	3	11	8.75	10.8	62	80	-	13	33	55	23	68	15
50	13	34	53	3	13.5	10	13	74	94	-	14	34	60	27	74	20
63	15.5	42	66	3	16	11.5	15.2	90	114	-	16	36	67	32	83	20

CN Mount Single Rod End – Rod Dimensions

Bore Ø	MM Rod Ø	Rod End														Rod Extension Dimensions		
		Style 9M		Style 4M		Style 9A		Style 4A		Style 8A		Style 55M						
		KK	A	KK	A	KK	A	KK	A	CC	A	AD	AE	AF	AM	C	D	NA
25	14	M10x1.5	12	M10x1.25	16	3/8-24	12	3/8-24	16	1/2-20	18	12	4	8	13	6	12	13
32	18	M12x1.75	15	M12x1.25	18	7/16-20	15	7/16-20	18	9/16-18	25	16	6	10	16	8	15	17
40	22	M16x2	20	M16x1.5	22	5/8-18	20	5/8-18	22	3/4-16	30	20	8	12	20	8	19	21
50	28	M20x2.5	24	M20x1.5	28	3/4-16	24	3/4-16	28	7/8-14	35	24	10	16	25	9	24	27
63	36	M27x3	30	M27x2	36	1-14	30	1-14	36	1 1/4-12	45	28	12	22	33	11	32	35

Rod End Dimensions

Thread Style 4 **Thread Style 8** **Thread Style 9** **Style 55**

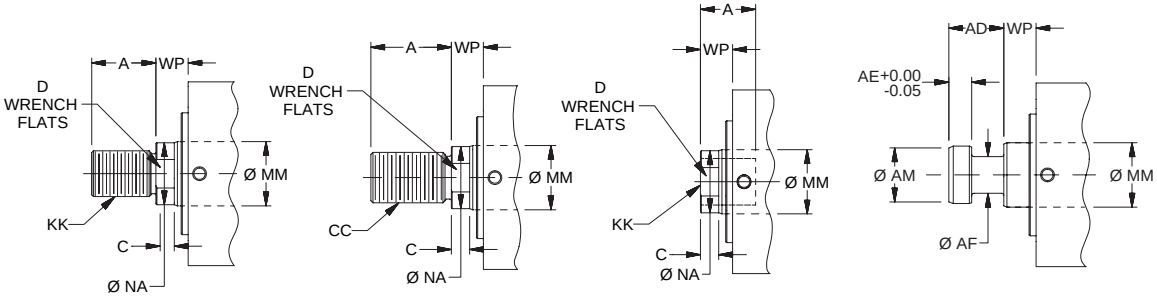

"Special" Thread Style 3

Special thread, extension, rod eye, blank, etc. are also available.

To order, specify "Style 3" and give desired dimensions for KK, A, & WP. If otherwise special furnish dimensional sketch.

Style CN Foot Mount with Pilot Gland – Double Rod End – 25mm to 63mm Bore Size

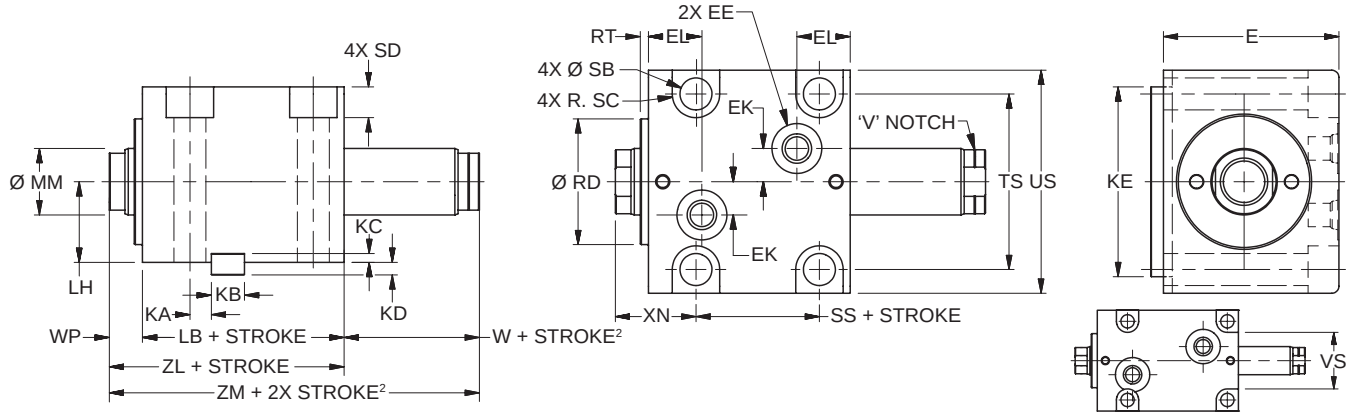

CN Mount Double Rod End – Envelope and Mounting Dimensions

Bore Ø	E	ED Ø	EE				EF	EK	EL	EM	KA	KB	KC	KD	KE
			SAE	NPT	BSP	Mani-fold									
25	45	10	# 2[1]	1/8	G-1/8	3	2	7	17.5	15.8	8.5	8	3.25	3.75	45
32	56	10	# 4	1/4	G-1/4	3	2	11	20.5	18.5	8	12	3.25	4.75	63
40	64	12	# 4	1/4	G-1/4	3	2	12	21	19	8	12	3.25	4.75	70
50	74	15	# 4	1/4	G-1/4	4	2	14	22.5	21	9	14	3.75	5.25	80
63	89	15	# 4	1/4	G-1/4	4	2	17	26	24.5	11	16	4.25	5.75	100

[1] Parker Triple-Lok™ Straight Thread Connector SAE #2 to ¼" 37° flare can be used when this port thread is required. Contact your local Parker Tube Fitting distributor and specify part number 4-2 F5OX.

[2] Minimum 'W + Stroke' on V notch rod side may apply. See minimum rod extension page for details.

25mm & 32mm BOLT HOLE DETAIL

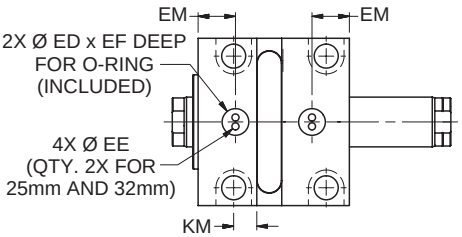

MANIFOLD PORT OPTION DETAIL
CAUTION: KM key slot location is for manifold ports only. Do not use for top mounted ports. KA key slot location is for top mounted ports. Do not use for manifold ports.

CN Mount Double Rod End – Envelope and Mounting Dimensions

Bore Ø	KM	LH	RD Ø f9	RT	SB Ø	SC	SD	TS	US	VS	W²	WP	XN	Add Stroke			Add 2X Stroke	Min. Stroke For M Port
														LB	SS	ZL	ZM²	
25	8.5	20	27	3	6.8	5.5	6.5	39	50	28	8	11	26	45	24.5	56	64	10
32	8	25	36	3	9	7	8.6	56	70	42	10	13	33	51	24	64	74	15
40	8	29	43	3	11	8.75	10.8	62	80	-	10	13	33	55	23	68	78	15
50	13	34	53	3	13.5	10	13	74	94	-	11	14	34	60	27	74	85	20
63	15.5	42	66	3	16	11.5	15.2	90	114	-	13	16	36	67	32	83	96	20

CN Mount Double Rod End – Rod Dimensions

Bore Ø	MM Rod Ø	Rod End														Rod Extension Dimensions		
		Style 9M²		Style 4M		Style 9A²		Style 4A		Style 8A		Style 55M						
		KK	A	KK	A	KK	A	KK	A	CC	A	AD	AE	AF	AM	C	D	NA
25	14	M10x1.5	12	M10x1.25	16	3/8-24	12	3/8-24	16	1/2-20	18	12	4	8	13	6	12	13
32	18	M12x1.75	15	M12x1.25	18	7/16-20	15	7/16-20	18	9/16-18	25	16	6	10	16	8	15	17
40	22	M16x2	20	M16x1.5	22	5/8-18	20	5/8-18	22	3/4-16	30	20	8	12	20	8	19	21
50	28	M20x2.5	24	M20x1.5	28	3/4-16	24	3/4-16	28	7/8-14	35	24	10	16	25	9	24	27
63	36	M27x3	30	M27x2	36	1-14	30	1-14	36	1 1/4-12	45	28	12	22	33	11	32	35

Rod End Dimensions

Thread Style 4

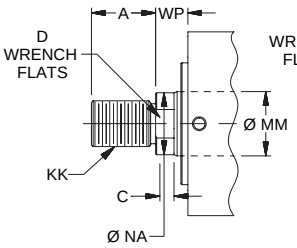

Thread Style 8

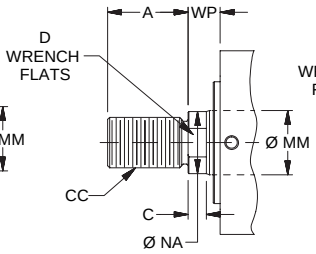

Thread Style 9

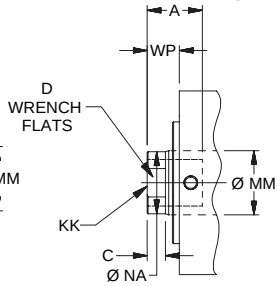

Style 55

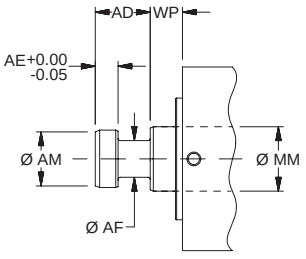

"Special" Thread Style 3

Special thread, extension, rod eye, blank, etc. are also available.

To order, specify "Style 3" and give desired dimensions for KK, A, & WP. If otherwise special furnish dimensional sketch.

EPS-C Threaded Style End-of-Stroke Switch

Optional high pressure inductive switches provide an end-of stroke signal in Series CHD cylinders. Available on both ends or one end only, EPS-C switches are low profile and can be specified on any of the four sides of the cylinder, except Styles C and CN where they are only available at port position #1.

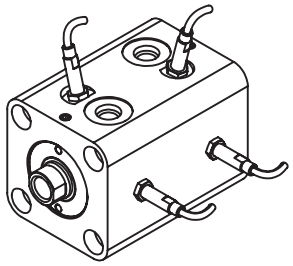

EPS-C Switch Specifications	
Switch Type:	Inductive Proximity
Style:	EPS-C
Code Designator:	J
Description:	General Purpose, 3 wire, DC Sensor
Supply Voltage:	10 to 30 VDC
Load Current, max.:	100 mA
Leak Current:	100 µA
Voltage Drop:	≤ 2.5 V
Operating Temperature:	-13˚ F to +176˚F
Part Number:	0961930000
Connection:	.3m Lead with 8mm Connector
Enclosure Rating:	Enclosure - IP68
Led Indication:	No
Short Circuit Protection:	Yes
Weld Field Immunity:	Yes
Output:	PNP
Approvals/Marks:	CE
Make/Break Location:	0.25" from end of stroke typical. Tolerance is +0 / -0.13"
Wiring Instructions:	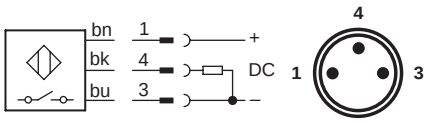

EPS-C limit switches may be ordered as follows:

1) Complete the basic cylinder model number.
2) Place an "S" in the model number for Special Modification.
3) Special modifications to cylinders other than switches must be described in the item notes.
4) Limit Switch Code – Specify letter prefix "J" for EPS-C then fill in the four blanks specifying port location, switch location and actuation point for both head and cap. If only one switch is used, place "XXXX" in the unused blanks.

Example = J13GG-XXXX denotes a switch on the Gland end only.

Example = XXXX-J42GG denotes a switch on the cap end only.

EPS-C Switch Dimensions

Bore Ø	EN	HS
25	17	50.5
32	20	54
40	21	58
50	23.5	63
63	26.5	69.5
80	30	78

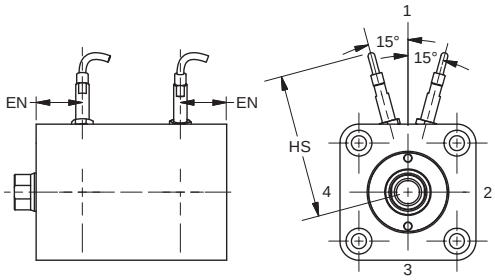

Bores 25 – 80
Position 1 only
(Styles C & CN position 1 only)

Note: Switch installation at 15˚ angle is only required when specified at position 1 (same position as ports).

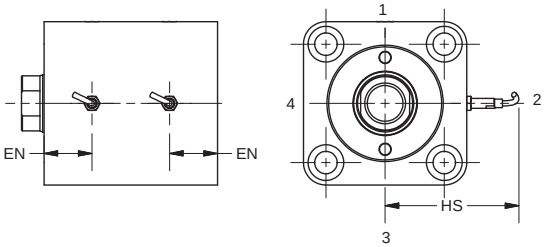

Bores 25 – 80
Positions 2 – 4
(Styles C & CN position 1 only)

8mm Cordset

Cable Length	Threaded Connector	Snap On Connector
5 meters	086620T005	086620S005
2 meters	086620T002	086620S002

Limit Switch Code

Head End				Cap End		
J	**1**[1]	**2**	**GG**	**1**[1]	**2**	**GG**
Specify: J=EPS-C	Port Location	Switch Location	Actuation Point GG= End of Stroke	Port Location	Switch Location	Actuation Point GG= End of Stroke

[1] Ports must always be specified in position 1.

CHD

Suggested Machining for Mounting Series CHD Styles C & CN Cylinders

The drawings and dimensions can be used as a suggested guide for preparing the mounting interface for a mounting style C or CN cylinder. Take care to note that the keyway location varies between top threaded port and bottom manifold port types. The KA keyway location is for top ports only and should not be used for manifold ports. And, the KM keyway location is for bottom manifold ports and should not be used for top threaded ports. Also the XS rod dimension applies only to the C mount and the XN rod dimension applies only to the CN mount.

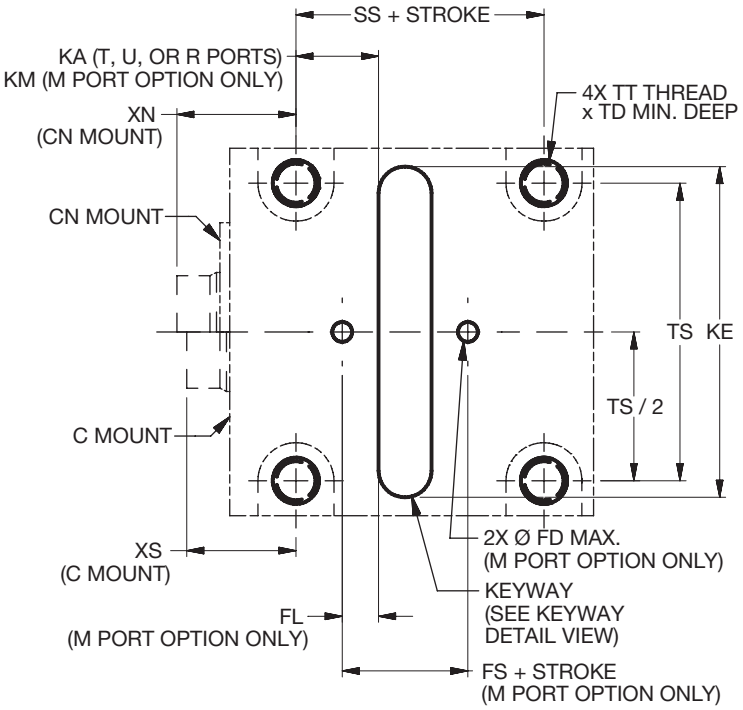

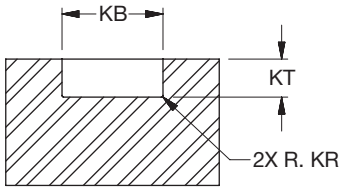

KEYWAY DETAIL

Machining Interface Dimensions

Bore Ø	FD[2]	FL[2]	KA[1]	KB	KE	KM[2]	KR	KT	TD	TS	TT	XN[3]	XS[3]	Add Stroke	
														FS[2]	SS
25	3	7.8	8.5	$8^{-0.043}$	$45^{+0.5}$	8.5	$0.16^{+.09}$	$4^{+0.2}$	14	39	M6x1-6H	26	23	13.5	24.5
32	3	9.5	8	$12^{-0.043}$	$63^{+0.5}$	8	$0.25^{+.15}$	$5^{+0.2}$	16	56	M8x1.25-6H	33	30	14	24
40	5	9	8	$12^{-0.043}$	$70^{+0.5}$	8	$0.25^{+.15}$	$5^{+0.2}$	20	62	M10x1.5-6H	33	30	17	23
50	6	12	9	$14^{-0.043}$	$80^{+0.5}$	13	$0.25^{+.15}$	$5.5^{+0.2}$	22	74	M12x1.75-6H	34	31	18	27
63	6	11	11	$16^{-0.043}$	$100^{+0.5}$	15.5	$0.25^{+.15}$	$6^{+0.2}$	24	90	M14x2-6H	36	33	18	32

[1] KA keyway location is for top ports only - do not use for 'M' manifold port option.
[2] KM keyway location, FD flow hole Ø and FL / FS flow hole locations apply to 'M' manifold port option only.
[3] XS dimension is used for C mount; XN dimension is used for CN mount.

Mounting Hardware

Bore Ø	Nominal Key Dimensions	Mounting SHCS[4]
25	8 x 7 x 45	M6 x 50
32	12 x 8 x 63	M8 x 60
40	12 x 8 x 70	M10 x 70
50	14 x 9 x 80	M12 x 80
63	16 x 10 x 100	M14 x 95

[4] Customer supplied (4x)

Minimum Rod Extension

Double rod cylinders with Style 9 on V notch side of cylinder

When a rod end Style 9 is specified on the V notch side of a double rod cylinder, a minimum W + Stroke dimension is required. This bore and stroke dependent value is shown in the following table.

Bore Ø	Minimum W + Stroke	For Strokes Equal-to or Less-than
20	18	10
25	23	15
32	25	15
40	30	20
50	31	20
63	38	25
80	42	25
100	51	25

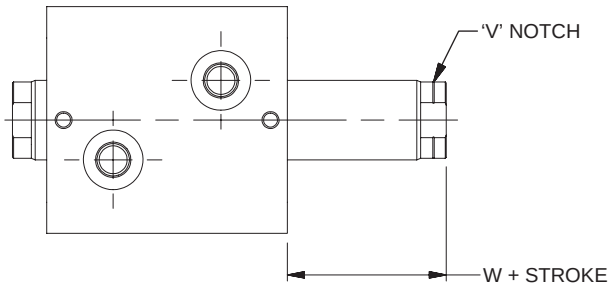

Style 3 (special) rod ends with female thread depth equal to the standard A dimension are also subject to this minimum. For deeper threads, the minimum W + Stroke will increase by the depth increase beyond the standard A dimension. No other rod end styles have this limitation.

Cylinder Mounting

Always mount Series CHE & CHD cylinders using high tensile alloy steel socket head screws and torque them to the values shown. In addition to bolts, styles C, CA & CN cylinders should be keyed to the mounting surface with a thrust key, utilizing the groove provided in the cylinder body or mounting bracket. Bolt kits for T, TN, and TR mounts are offered and can be specified by kit part numbers on the next page. Refer to CHE or CHD mounting style pages for bore and mounting availability.

Mounting Bolt Torques

Series	Bore Ø	Metric Mounting Bolts			Inch Mounting Bolts		
		Mount	Size	Torque (N-m)	Mount	Size	Torque (lb-ft)
CHE	20	T, TN, TR	M5x0.8	4.5 - 4.7	T, TN, TR	#10-32	3.2 - 3.4
	25	T, TN, TR	M5x0.8	4.5 - 4.7	T, TN, TR	#10-32	3.2 - 3.4
	32	T, TN, TR	M6x1	7.5 - 7.9	T, TN, TR	1/4-28	5.6 - 5.9
	40	T, TN, TR	M8x1.25	18 - 19	T, TN, TR	5/16-24	13 - 14
	50	T, TN, TR	M10x1.5	35 - 37	T, TN, TR	3/8-24	25 - 26
	63	T, TN, TR	M12x1.75	60 - 63	T, TN, TR	1/2-20	47 - 49
	80	T, TN, TR	M14x2	100 - 105	T, TN, TR	1/2-20[1]	70 - 73
						9/16-18	75 - 79
	100	T, TN, TR	M16x2	150 - 158	T, TN, TR	5/8-18	115 - 120
CHD	20	T, TN, TR M, MN, MR	M5x0.8	6.8 - 7.1	T, TN, TR A, AN, AR	#10-32	4.7 - 4.9
	25	T, TN, TR M, MN, MR	M5x0.8	6.8 - 7.1	T, TN, TR A, AN, AR	#10-32	4.7 - 4.9
	32	T, TN, TR M, MN, MR	M6x1	11 - 12	T, TN, TR A, AN, AR	1/4-28	8.3 - 8.7
	40	T, TN, TR M, MN, MR	M8x1.25	27 - 28	T, TN, TR A, AN, AR	5/16-24	20 - 21
	50	T, TN, TR M, MN, MR	M10x1.5	55 - 58	T, TN, TR A, AN, AR	3/8-24	38 - 40
	63	T, TN, TR M, MN, MR	M12x1.75	90 - 95	T, TN, TR A, AN, AR	1/2-20	70 - 73
	80	T, TN, TR M, MN, MR	M14x2	150 - 158	T, TN, TR	1/2-20[1]	70 - 73
						9/16-18	110 - 115
					A, AN, AR	5/8-18	170 - 178
CHE & CHD	20	J, H	M5x0.8	6.8 - 7.1	J, H	#10-32	4.7 - 4.9
	25	J, H	M5x0.8	6.8 - 7.1	J, H	#10-32	4.7 - 4.9
	32	J, H	M6x1	11 - 12	J, H	1/4-28	8.3 - 8.7
	40	J, H	M10x1.5	55 - 58	J, H	3/8-24	38 - 40
	50	J, H	M12x1.75	90 - 95	J, H	1/2-20	70 - 73
	63	J, H	M14x2	150 - 158	J, H	9/16-18	110 - 115
	80	J, H	M16x2	230 - 240	J, H	5/8-18	170 - 178
	100	J, H	M20x2.5	450 - 475	J, H	3/4-16	315 - 330
CHE & CHD	20	CA	M5x0.8	6.8 - 7.1	CA	#10-32	4.7 - 4.9
	25	C, CN, CA	M6x1	11 - 12	C, CN, CA	1/4-28	8.3 - 8.7
	32	C, CN, CA	M8x1.25	27 - 28	C, CN, CA	5/16-18	20 - 21
	40	C, CN, CA	M10x1.5	55 - 58	C, CN, CA	3/8-18	38 - 40
	50	C, CN, CA	M12x1.75	90 - 95	C, CN, CA	1/2-20	70 - 73
	63	C, CN, CA	M14x2	150 - 158	C, CN, CA	9/16-18	110 - 115
	80	CA	M16x2	230 - 242	CA	5/8-18	170 - 178
	100	CA	M20x2.5	450 - 475	CA	3/4-16	315 - 330

[1] When using ½" socket head cap screws with 80mm T mount, flat washers are required; flat washer OD must be .866" ±.020 (22mm ±0.5).

Mounting Bolt Kits for Series CHE & CHD – Styles T, TN & TR

(Kits include four bolts.)

Bore Ø	Bolt Size	Bolt Length	A Thread Length[1]	Kit Part Number
20	M5x0.8	45mm + Stroke	7.4mm	CHEB020[2]
25	M5x0.8	50mm + Stroke	10.4mm	CHEB025[2]
32	M6x1	55mm + Stroke	10.5mm	CHEB032[2]
40	M8x1.25	60mm + Stroke	13.6mm	CHEB040[2]
50	M10x1.5	65mm + Stroke	15.8mm	CHEB050[2]
63	M12x1.75	70mm + Stroke	16.0mm	CHEB063[2]
80	M14x2	85mm + Stroke	22.2mm	CHEB080[2]
100	M16x2	105mm + Stroke	26.5mm	CHEB100[2]

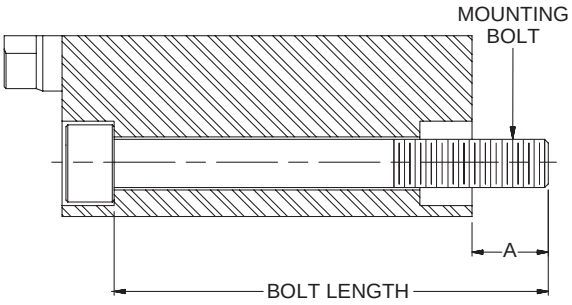

[1] For intermediate stroke lengths the 'A' exposed thread length will be therefore increased by the difference between the actual stroke and the next longer 5mm bolt stroke length increment.

[2] The last three digits of the kit part number are to be supplied as the cylinder stroke in 5mm increments. When specifying a bolt kit for intermediate stroke lengths, use the next longer 5mm stroke increment.

E.g. Kit number for 20mm bore, 35mm stroke – CHEB020035
Kit number for 50mm bore, 72mm stroke – CHEB050075

Parts Identification Drawing – Standard Piston

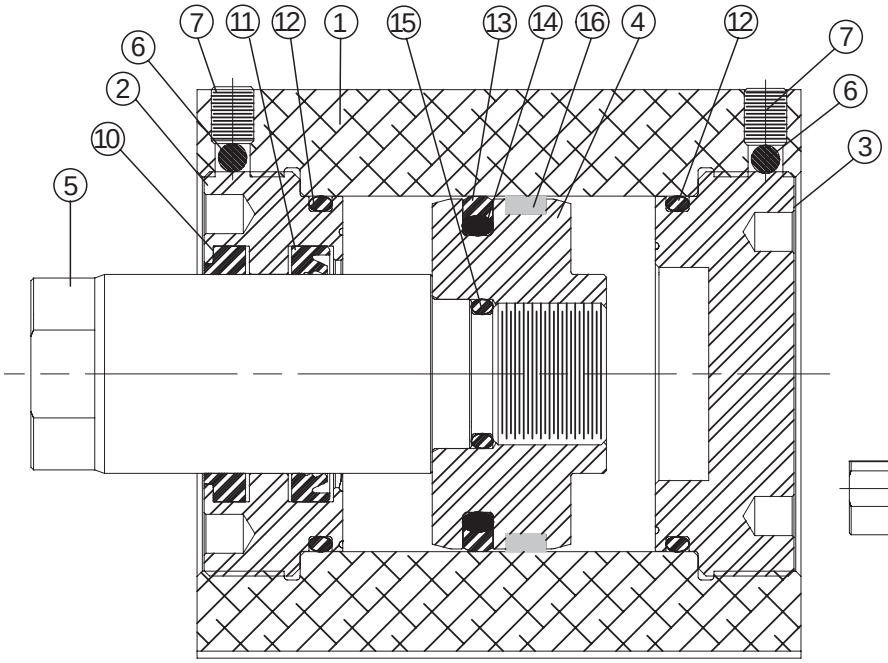

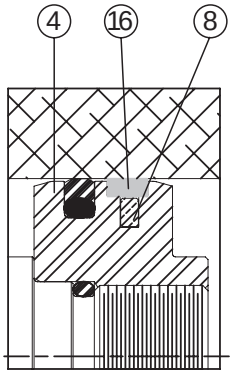

Series CHE
Magnetic Piston Option

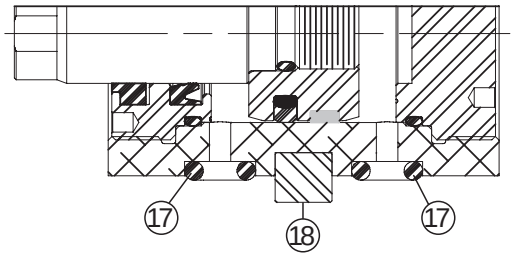

Series CHD - C & CN Mount
Manifold Port Option

Item No.	Description	Material	Item No.	Description	Material	
					Standard	**Fluorocarbon**
1	Cylinder Body - CHE	Aluminum Alloy (Hard Anodized)	10	Rod Wiper	PUR	Fluorocarbon
			11	Rod Seal	PUR	Fluorocarbon
	Cylinder Body - CHD	Steel	Not Shown	Rod Seal Back-up Washer[2]	Not Required	Virgin PTFE
2	Gland	Nodular Iron or Bronze				
3	Cap	Nodular Iron or Bronze	12	End Seal	PUR	Fluorocarbon
4	Piston – Standard	Nodular Iron	13	Piston Seal	PUR	Filled PTFE
	Piston – with Magnet	Aluminum Alloy	14	PS Energizer	NBR	Fluorocarbon
5	Piston Rod	Carbon Steel (Hard Chrome Plated)	15	Piston-to-Rod o-ring	PUR	Fluorocarbon
6	Ball	Nylon	16	Piston Wear Band	Glass-reinforced nylon	Glass-reinforced nylon
7	Set Screw	Alloy Steel	17	Manifold Port Seal	PUR	Fluorocarbon
8	Magnet	Sintered NdFeB[1]	18	C & CN Mount Key	Steel	

[1] Neodymium Iron Boron
[2] 32-100mm bores only

Seal Kits For Series CHE & CHD

See Standard Specifications Page for fluid and temperature compatibility. Cylinder gland and cap are threaded into the cylinder body. To service rod seal, rod wiper, piston seal, or end seals the gland or cap must be removed. Spanner holes in the gland and cap are available for the purpose of removing and installing these components. Be sure to torque the gland or cap to the specifications below and replace the nylon ball and set screw to further lock them in place. Refer to CHE & CHD mounting style pages for Bore and Rod Diameter availability.

Rod Gland and Rod Seal Kits for Series CHE & CHD

Rod Ø	Rod Gland (w/o pilot[1]) Kits			Rod Seal Kits		
	Class 1	Class 2	Class 5	Class 1	Class 2	Class 5
	Consists of 1 ea. of items #2, 6, 10, 11[2], & 12			Consists of 1 ea. of items #6, 10, 11[2], & 12		
12	RGCHE01201	RGCHE01202	RGCHE01205	RKCHE01201	RKCHE01202	RKCHE01205
14	RGCHE01401	RGCHE01402	RGCHE01405	RKCHE01401	RKCHE01402	RKCHE01405
18	RGCHE01801	RGCHE01802	RGCHE01805	RKCHE01801	RKCHE01802	RKCHE01805
22	RGCHE02201	RGCHE02202	RGCHE02205	RKCHE02201	RKCHE02202	RKCHE02205
28	RGCHE02801	RGCHE02802	RGCHE02805	RKCHE02801	RKCHE02802	RKCHE02805
36	RGCHE03601	RGCHE03602	RGCHE03605	RKCHE03601	RKCHE03602	RKCHE03605
45	RGCHE04501	RGCHE04502	RGCHE04505	RKCHE04501	RKCHE04502	RKCHE04505
56	RGCHE05601	RGCHE05602	RGCHE05605	RKCHE05601	RKCHE05602	RKCHE05605

[1] Pilot gland is required for AN, CA, CN, J, MN and TN mounting styles. For Gland Kit with pilot change 'CHE0' in kit number to 'CHEP'. E.g. RGCHEP1201.

Complete Seal Kits for Series CHE & CHD

Bore Ø	Class 1	Class 2	Class 5	Gland & Cap Torque Specifications	
	Consists of 1 ea. of items #10, 11[2], 13, 14, 16 & 2 ea. of items #6 & 12			Nm	ft-lbs
20	SKCHE02001	SKCHE02002	SKCHE02005	18 - 19	13 -14
25	SKCHE02501	SKCHE02502	SKCHE02505	31 - 33	23 - 24
32	SKCHE03201	SKCHE03202	SKCHE03205	68 - 71	50 - 53
40	SKCHE04001	SKCHE04002	SKCHE04005	95 - 100	70 - 74
50	SKCHE05001	SKCHE05002	SKCHE05005	95 - 100	70 - 74
63	SKCHE06301	SKCHE06302	SKCHE06305	136 - 143	100 - 105
80	SKCHE08001	SKCHE08002	SKCHE08005	203 - 213	150 - 158
100	SKCHE10001	SKCHE10002	SKCHE10005	237 - 249	175 - 184

[2] Class 5 kits for 32-100mm bores and 18-56mm rods include a PTFE Back-up washer for the rod seal. Class 2 kits for all bores and all rods include an active rod seal back-up washer.

Spanner Hole Dimensions

Gland & Cap Spanners

Bore Ø	CC	DD	FF Ø	TH	TP
20	2.25	2.25	22	–	–
25	3.25	3.25	25	–	–
32	4.25	4.25	30	M3x0.5 - 6H	6
40	5.25	5.25	35	M4x0.7 - 6H	7
50	6.38	6.25	45	M5x0.8 - 6H	7
63	8.38	8.25	55	M6x1 - 6H	8
80	10.50	10.50	70	M8x1.25 - 6H	9
100	10.50	10.50	85	M8x1.25 - 6H	9

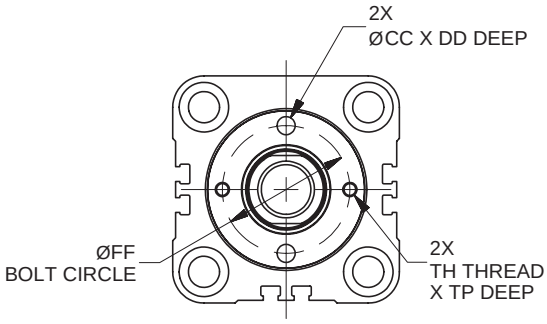

CHE / CHD

Safety Guide for Selecting and Using Hydraulic, Pneumatic Cylinders and Their Accessories

WARNING: ⚠ FAILURE OF THE CYLINDER, ITS PARTS, ITS MOUNTING, ITS CONNECTIONS TO OTHER OBJECTS, OR ITS CONTROLS CAN RESULT IN:

- **Unanticipated or uncontrolled movement of the cylinder or objects connected to it.**
- **Falling of the cylinder or objects held up by it.**
- **Fluid escaping from the cylinder, potentially at high velocity.**

THESE EVENTS COULD CAUSE DEATH OR PERSONAL INJURY BY, FOR EXAMPLE, PERSONS FALLING FROM HIGH LOCATIONS, BEING CRUSHED OR STRUCK BY HEAVY OR FAST MOVING OBJECTS, BEING PUSHED INTO DANGEROUS EQUIPMENT OR SITUATIONS, OR SLIPPING ON ESCAPED FLUID.

Before selecting or using Parker Hannifin Corporation (the Company) cylinders or related accessories, it is important that you read, understand and follow the following safety information. Training is advised before selecting and using the Company's products.

1.0 General Instructions

1.1 Scope – This safety guide provides instructions for selecting and using (including assembling, installing, and maintaining) cylinder products. This safety guide is a supplement to and is to be used with the specific Company publications for the specific cylinder products that are being considered for use.

1.2 Fail Safe – Cylinder products can and do fail without warning for many reasons. All systems and equipment should be designed in a fail-safe mode so that if the failure of a cylinder product occurs people and property won't be endangered.

1.3 Distribution – Provide a free copy of this safety guide to each person responsible for selecting or using cylinder products. Do not select or use the Company's cylinders without thoroughly reading and understanding this safety guide as well as the specific Company publications for the products considered or selected.

1.4 User Responsibility – Due to very wide variety of cylinder applications and cylinder operating conditions, the Company does not warrant that any particular cylinder is suitable for any specific application. This safety guide does not analyze all technical parameters that must be considered in selecting a product. The hydraulic and pneumatic cylinders outlined in this catalog are designed to the Company's design guidelines and do not necessarily meet the design guideline of other agencies such as American Bureau of Shipping, ASME Pressure Vessel Code etc. The user, through its own
analysis and testing, is solely responsible for:

- Making the final selection of the cylinders and related accessories.
- Determining if the cylinders are required to meet specific design requirements as required by the Agency(s) or industry standards covering the design of the user's equipment.
- Assuring that the user's requirements are met, OSHA requirements are met, and safety guidelines from the applicable agencies such as but not limited to ANSI are followed and that the use presents no health or safety hazards.
- Providing all appropriate health and safety warnings on the equipment on which the cylinders are used.

1.5 Additional Questions – Call the appropriate Company technical service department if you have any questions or require any additional information. See the Company publication for the product being considered or used, or call 1-847-298-2400, or go to www.parker.com, for telephone numbers of the appropriate technical service department.

2.0 Cylinder and Accessories Selection

2.1 Seals – Part of the process of selecting a cylinder is the selection of seal compounds. Before making this selection, consult the "seal information page(s)" of the publication for the series of cylinders of interest.

The application of cylinders may allow fluids such as cutting fluids, wash down fluids etc. to come in contact with the external area of the cylinder. These fluids may attack the piston rod wiper and or the primary seal and must be taken into account when selecting and specifying seal compounds.

Dynamic seals will wear. The rate of wear will depend on many operating factors. Wear can be rapid if a cylinder is mis-aligned or if the cylinder has been improperly serviced. The user must take seal wear into consideration in the application of cylinders.

2.2 Piston Rods – Possible consequences of piston rod failure or separation of the piston rod from the piston include, but are not limited to are:

- Piston rod and or attached load thrown off at high speed.
- High velocity fluid discharge.
- Piston rod extending when pressure is applied in the piston retract mode.

Piston rods or machine members attached to the piston rod may move suddenly and without warning as a consequence of other conditions occurring to the machine such as, but not limited to:

- Unexpected detachment of the machine member from the piston rod.
- Failure of the pressurized fluid delivery system (hoses, fittings, valves, pumps, compressors) which maintain cylinder position.
- Catastrophic cylinder seal failure leading to sudden loss of pressurized fluid.
- Failure of the machine control system.

Follow the recommendations of the "Piston Rod Selection Chart and Data" in the publication for the series of cylinders of interest. The suggested piston rod diameter in these charts must be followed in order to avoid piston rod buckling.

Piston rods are not normally designed to absorb bending moments or loads which are perpendicular to the axis of piston rod motion. These additional loads can cause the piston rod to fail. If these types of additional loads are expected to be imposed on the piston rod, their magnitude should be made known to our engineering department.

The cylinder user should always make sure that the piston rod is securely attached to the machine member.

On occasion cylinders are ordered with double rods (a piston rod extended from both ends of the cylinder). In some cases a stop is threaded on to one of the piston rods and used as an external stroke adjuster. On occasions spacers are attached to the machine member connected to the piston rod and also used as a stroke adjuster. In both cases the stops will create a pinch point and the user should consider appropriate use of guards. If these external stops are not perpendicular to the mating contact surface, or if debris is trapped between the contact surfaces, a bending moment will be placed on the piston rod, which can lead to piston rod failure. An external stop will also negate the effect of cushioning and will subject the piston rod to impact loading. Those two (2) conditions can cause piston rod failure. Internal stroke adjusters are available with and without cushions. The use of external stroke adjusters should be reviewed with our engineering department.

The piston rod to piston and the stud to piston rod threaded connections are secured with an anaerobic adhesive. The strength of the adhesive decreases with increasing temperature. Cylinders which can be exposed to temperatures above +250°F (+121°C) are to be ordered with a non studded piston rod and a pinned piston to rod joint.

2.3 Cushions – Cushions should be considered for cylinder applications when the piston velocity is expected to be over 4 inches/second.

Cylinder cushions are normally designed to absorb the energy of a linear applied load. A rotating mass has considerably more energy than the same mass moving in a linear mode. Cushioning for a rotating mass application should be reviewed by our engineering department.

2.4 Cylinder Mountings – Some cylinder mounting configurations may have certain limitations such as but not limited to minimum stroke for side or foot mounting cylinders or pressure de-ratings for certain mounts. Carefully review the catalog for these types of restrictions.

Always mount cylinders using the largest possible high tensile alloy steel socket head cap screws that can fit in the cylinder mounting holes and torque them to the manufacturer's recommendations for their size.

2.5 Port Fittings – Hydraulic cylinders applied with meter out or deceleration circuits are subject to intensified pressure at piston rod end.

The rod end pressure is approximately equal to:

$$\frac{\text{operating pressure x effective cap end area}}{\text{effective rod end piston area}}$$

Contact your connector supplier for the pressure rating of individual connectors.

3.0 Cylinder and Accessories Installation and Mounting

3.1 Installation

3.1.1 – Cleanliness is an important consideration, and cylinders are shipped with the ports plugged to protect them from contaminants entering the ports. These plugs should not be removed until the piping is to be installed. Before making the connection to the cylinder ports, piping should be thoroughly cleaned to remove all chips or burrs which might have resulted from threading or flaring operations.

3.1.2 – Cylinders operating in an environment where air drying materials are present such as fast-drying chemicals, paint, or weld splatter, or other hazardous conditions such as excessive heat, should have shields installed to prevent damage to the piston rod and piston rod seals.

3.1.3 – Proper alignment of the cylinder piston rod and its mating component on the machine should be checked in both the extended and retracted positions. Improper alignment will result in excessive rod gland and/or cylinder bore wear. On fixed mounting cylinders attaching the piston rod while the rod is retracted will help in achieving proper alignment.

3.1.4 – Sometimes it may be necessary to rotate the piston rod in order to thread the piston rod into the machine member. This operation must always be done with zero pressure being applied to either side of the piston. Failure to follow this procedure may result in loosening the piston to rod-threaded connection. In some rare cases the turning of the piston rod may rotate a threaded piston rod gland and loosen it from the
cylinder head. Confirm that this condition is not occurring. If it does, re-tighten the piston rod gland firmly against the cylinder head.

For double rod cylinders it is also important that when attaching or detaching the piston rod from the machine member that the torque be applied to the piston rod end of the cylinder that is directly attaching to the machine member with the opposite end unrestrained. If the design of the machine is such that only the rod end of the cylinder opposite to where the rod attaches to the machine member can be rotated, consult the factory for further instructions.

3.2 Mounting Recommendations

3.2.1 – Always mount cylinders using the largest possible high tensile alloy steel socket head screws that can fit in the cylinder mounting holes and torque them to the manufacturer's recommendations for their size.

3.2.2 – Side-Mounted Cylinders – In addition to the mounting bolts, cylinders of this type should be equipped with thrust keys or dowel pins located so as to resist the major load.

3.2.3 – Tie Rod Mounting – Cylinders with tie rod mountings are recommended for applications where mounting space is limited. The standard tie rod extension is shown as BB in dimension tables. Longer or shorter extensions can be supplied. Nuts used for this mounting style should be torqued to the same value as the tie rods for that bore size.

3.2.4 – Flange Mount Cylinders – The controlled diameter of the rod gland extension on head end flange mount cylinders can be used as a pilot to locate the cylinders in relation to the machine. After alignment has been obtained, the flanges may be drilled for pins or dowels to prevent shifting.

3.2.5 – Trunnion Mountings – Cylinders require lubricated bearing blocks with minimum bearing clearances. Bearing blocks should be carefully aligned and rigidly mounted so the trunnions will not be subjected to bending moments. The rod end should also be pivoted with the pivot pin in line and parallel to axis of the trunnion pins.

3.2.6 – Clevis Mountings – Cylinders should be pivoted at both ends with centerline of pins parallel to each other. After cylinder is mounted, be sure to check to assure that the cylinder is free to swing through its working arc without interference from other machine parts.

4.0 Cylinder and Accessories Maintenance, Troubleshooting and Replacement

4.1 Storage – At times cylinders are delivered before a customer is ready to install them and must be stored for a period of time. When storage is required the following procedures are recommended.

4.1.1 – Store the cylinders in an indoor area which has a dry, clean and noncorrosive atmosphere. Take care to protect the cylinder from both internal corrosion and external damage.

4.1.2 – Whenever possible cylinders should be stored in a vertical position (piston rod up). This will minimize corrosion due to possible condensation which could occur inside the cylinder. This will also minimize seal damage.

4.1.3 – Port protector plugs should be left in the cylinder until the time of installation.

4.1.4 – If a cylinder is stored full of hydraulic fluid, expansion of the fluid due to temperature changes must be considered. Installing a check valve with free flow out of the cylinder is one method.

4.1.5 – When cylinders are mounted on equipment that is stored outside for extended periods, exposed unpainted surfaces, e.g. piston rod, must be coated with a rust-inhibiting compound to prevent corrosion.

4.2 Cylinder Trouble Shooting

4.2.1 – **External Leakage**

4.2.1.1 – Rod seal leakage can generally be traced to worn or damaged seals. Examine the piston rod for dents, gouges or score marks, and replace piston rod if surface is rough.

Rod seal leakage could also be traced to gland wear. If clearance is excessive, replace rod bushing and seal. Rod seal leakage can also be traced to seal deterioration. If seals are soft or gummy or brittle, check compatibility of seal material with lubricant used if air cylinder, or operating fluid if hydraulic cylinder. Replace with seal material, which is compatible with these fluids. If the seals are hard or have lost elasticity, it is usually due to exposure to temperatures in excess of 165˚F. (+74˚C). Shield the cylinder from the heat source to limit temperature to 350˚F. (+177˚C.) and replace with fluorocarbon seals.

4.2.1.2 – Cylinder body seal leak can generally be traced to loose tie rods. Torque the tie rods to manufacturer's recommendation for that bore size.

Excessive pressure can also result in cylinder body seal leak. Determine maximum pressure to rated limits. Replace seals and retorque tie rods as in paragraph above. Excessive pressure can also result in cylinder body seal leak. Determine if the pressure rating of the cylinder has been exceeded. If so, bring the operating pressure down to the rating of the cylinder and have the tie rods replaced.

Pinched or extruded cylinder body seal will also result in a leak. Replace cylinder body seal and retorque as in paragraph above.

Cylinder body seal leakage due to loss of radial squeeze which shows up in the form of flat spots or due to wear on the O.D. or I.D. – Either of these are symptoms of normal wear due to high cycle rate or length of service. Replace seals as per paragraph above.

4.2.2 – **Internal Leakage**

4.2.2.1 – Piston seal leak (by-pass) 1 to 3 cubic inches per minute leakage is considered normal for piston ring construction. Virtually no static leak with lipseal type seals on piston should be expected. Piston seal wear is a usual cause of piston seal leakage. Replace seals as required.

4.2.2.2 – With lipseal type piston seals excessive back pressure due to over-adjustment of speed control valves could be a direct cause of rapid seal wear. Contamination in a hydraulic system can result in a scored cylinder bore, resulting in rapid seal wear. In either case, replace piston seals as required.

4.2.2.3 – What appears to be piston seal leak, evidenced by the fact that the cylinder drifts, is not always traceable to the piston. To make sure, it is suggested that one side of the cylinder piston be pressurized and the fluid line at the opposite port be disconnected. Observe leakage. If none is evident, seek the cause of cylinder drift in other component parts in the circuit.

4.2.3 – **Cylinder Fails to Move the Load**

4.2.3.1 – Pneumatic or hydraulic pressure is too low. Check the pressure at the cylinder to make sure it is to circuit requirements.

4.2.3.2 – Piston Seal Leak – Operate the valve to cycle the cylinder and observe fluid flow at valve exhaust ports at end of cylinder stroke. Replace piston seals if flow is excessive.

4.2.3.3 – Cylinder is undersized for the load – Replace cylinder with one of a larger bore size.

4.3 Erratic or Chatter Operation

4.3.1 – Excessive friction at rod gland or piston bearing due to load misalignment – Correct cylinder-to-load alignment.

4.3.2 – Cylinder sized too close to load requirements – Reduce load or install larger cylinder.

4.3.3 – Erratic operation could be traced to the difference between static and kinetic friction. Install speed control valves to provide a back pressure to control the stroke.

4.4 Cylinder Modifications, Repairs, or Failed Component – Cylinders as shipped from the factory are not to be disassembled and or modified. If cylinders require modifications, these modifications must be done at company locations or by the Company's certified facilities. The Cylinder Division Engineering Department must be notified in the event of a mechanical fracture or permanent deformation of any cylinder component (excluding seals). This includes a broken piston rod, tie rod, mounting accessory or any other cylinder component. The notification should include all operation and application details. This information will be used to provide an engineered repair that will prevent recurrence of the failure.

It is allowed to disassemble cylinders for the purpose of replacing seals or seal assemblies. However, this work must be done by strictly following all the instructions provided with the seal kits.

Manufacturing Locations

Regional Plants

California
221 Helicopter Circle
Corona, CA 92880
Tel.: (951) 475-6150

Georgia
1300 Six Flags Road
Lithia Springs, GA 30122
Tel.: (419) 394-7445

Indiana
Goodland Plant
715 South Iroquois Street
Goodland, IN 47948
Tel.: (847) 699-5290

Michigan
900 Plymouth Road
Plymouth, MI 48170
Tel.: (734) 456-9211

Ohio
1700 E Spring Street
St Marys, OH 45885
Tel.: (734) 456-9211

Oregon
29289 Airport Road
Eugene, OR 97402
Tel.: (951) 475-6150

The items described in this document and other documents and descriptions provided by Parker Hannifin Corporation, its subsidiaries and its authorized distributors ("Seller") are hereby offered for sale at prices to be established by Seller. This offer and its acceptance by any customer ("Buyer") shall be governed by all of the following Terms and Conditions. Buyer's order for any item described in its document, when communicated to Seller verbally, or in writing, shall constitute acceptance of this offer. All goods, services or work described will be referred to as "Products".

1. Terms. All sales of Products by Seller will be governed by, and are expressly conditioned upon Buyer's assent to, these Terms. These Terms are incorporated into any Quote provided by Seller to Buyer. Buyer's order for any Products whether communicated to Seller verbally, in writing, by electronic data interface or other electronic commerce, shall constitute acceptance of these Terms. Seller objects to any contrary or additional terms or conditions of Buyer. Reference in Seller's order acknowledgement to Buyer's purchase order or purchase order number shall in no way constitute an acceptance of any of Buyer's terms or conditions of purchase. Any Quote made by Seller to Buyer shall be considered a firm and definite offer and shall not be deemed to be otherwise despite any language on the face of the Quote. Seller reserves all rights to accept or reject any purported acceptance by Buyer to Seller's Quote if such purported acceptance attempts to vary the terms of the Quote. If Seller ships Products after Buyer issues an acceptance to the Quote, any additional or different terms proposed by Buyer will not become part of the parties' business relationship unless agreed to in a writing that is signed by an authorized representative of Seller, excluding email correspondence. If the transaction proceeds without such agreement on the part of Seller, the business relationship will be governed solely by these Terms and the specific terms in Seller's Quote.

2. Price; Payment. The Products set forth in the Quote are offered for sale at the prices indicated in the Quote. Unless otherwise specifically stated in the Quote, prices are valid for thirty (30) days and do not include any sales, use, or other taxes or duties. Seller reserves the right to modify prices for any reason and at any time by giving ten (10) days prior written notice. Unless otherwise specified by Seller, all prices are F.C.A. Seller's facility (INCOTERMS 2020). All sales are contingent upon credit approval and full payment for all purchases is due thirty (30) days from the date of invoice (or such date as may be specified in the Quote). Under any circumstances, Buyer may not withhold or suspend payment of any amounts due and payable as a deduction, set-off or recoupment of any amount, claim or dispute with Seller. Unpaid invoices beyond the specified payment date incur interest at the rate of 1.5% per month or the maximum allowable rate under applicable law. Seller reserves the right to require advance payment or provision of securities for first and subsequent deliveries if there is any doubt, in Seller's sole determination, regarding the Buyer's creditworthiness or for other business reasons. If the requested advance payment or securities are not provided to Seller's satisfaction, Seller reserves the right to suspend performance or reject the purchase order, in whole or in part, without prejudice to Seller's other rights or remedies, including the right to full compensation. Seller may revoke or shorten any payment periods previously granted in Seller's sole determination. The rights and remedies herein reserved to Seller are cumulative and in addition to any other or further rights and remedies available at law or in equity. No waiver by Seller of any breach by Buyer of any provision of these terms will constitute a waiver by Seller of any other breach of such provision.

3. Shipment; Delivery; Title and Risk of Loss. All delivery dates are approximate, and Seller is not responsible for damages or additional costs resulting from any delay. All deliveries are subject to our ability to procure materials from our suppliers. Regardless of the manner of shipment, delivery occurs and title and risk of loss or damage pass to Buyer, upon placement of the Products with the carrier at Seller's facility. Unless otherwise agreed prior to shipment and for domestic delivery locations only, Seller will select and arrange, at Buyer's sole expense, the carrier and means of delivery. When Seller selects and arranges the carrier and means of delivery, freight and insurance costs for shipment to the designated delivery location will be prepaid by Seller and added as a separate line item to the invoice. Buyer shall be responsible for any additional shipping charges incurred by Seller due to Buyer's acts or omissions. Buyer shall not return or repackage any Products without the prior written authorization from Seller, and any return shall be at the sole cost and expense of Buyer.

4. Warranty. The warranty for the Products is as follows: (i) Goods are warranted against defects in material or workmanship for a period of eighteen (18) months from the date of delivery or 2,000 hours of use, whichever occurs first; (ii) Services shall be performed in accordance with generally accepted practices and using the degree of care and skill that is ordinarily exercised and customary in the field to which the Services pertain and are warranted for a period of six (6) months from the date of completion of the Services; and (iii) Software is only warranted to perform in accordance with applicable specifications provided by Seller to Buyer for ninety (90) days from the date of delivery or, when downloaded by a Buyer or end-user, from the date of the initial download. All prices are based upon the exclusive limited warranty stated above, and upon the following disclaimer: **EXEMPTION CLAUSE; DISCLAIMER OF WARRANTY, CONDITIONS, REPRESENTATIONS: THIS WARRANTY IS THE SOLE AND ENTIRE WARRANTY, CONDITION, AND REPRESENTATION, PERTAINING TO PRODUCTS. SELLER DISCLAIMS ALL OTHER WARRANTIES, CONDITIONS, AND REPRESENTATIONS, WHETHER STATUTORY, EXPRESS OR IMPLIED, INCLUDING BUT NOT LIMITED TO THOSE RELATING TO DESIGN, NONINFRINGEMENT, MERCHANTABILITY, AND FITNESS FOR A PARTICULAR PURPOSE. SELLER DOES NOT WARRANT THAT THE SOFTWARE IS ERROR-FREE OR FAULT-TOLERANT, OR THAT BUYER'S USE THEREOF WILL BE SECURE OR UNINTERRUPTED, UNLESS OTHERWISE AUTHORIZED IN WRITING BY SELLER, THE SOFTWARE SHALL NOT BE USED IN CONNECTION WITH HAZARDOUS OR HIGH-RISK ACTIVITIES OR ENVIRONMENTS. EXCEPT AS EXPRESSLY STATED HEREIN, ALL PRODUCTS ARE PROVIDED "AS IS".**

5. Claims; Commencement of Actions. Buyer shall promptly inspect all Products upon receipt. No claims for shortages will be allowed unless reported to Seller within ten (10) days of delivery. Buyer shall notify Seller of any alleged breach of warranty within thirty (30) days after the date the non-conformance is or should have been discovered by Buyer. Any claim or action against Seller based upon breach of contract or any other theory, including tort, negligence, or otherwise must be commenced within twelve (12) months from the date of the alleged breach or other alleged event, without regard to the date of discovery.

6. LIMITATION OF LIABILITY. IN THE EVENT OF A BREACH OF WARRANTY, SELLER WILL, AT ITS OPTION, REPAIR OR REPLACE THE NON-CONFORMING PRODUCTS, RE-PERFORM THE SERVICES, OR REFUND THE PURCHASE PRICE PAID WITHIN A REASONABLE PERIOD OF TIME. IN NO EVENT IS SELLER LIABLE FOR ANY SPECIAL, INDIRECT, INCIDENTAL OR CONSEQUENTIAL DAMAGES INCLUDING ANY LOSS OF REVENUE OR PROFITS, WHETHER BASED IN CONTRACT, TORT OR OTHER LEGAL THEORY. IN NO EVENT SHALL SELLER'S LIABILITY UNDER ANY CLAIM MADE BY BUYER EXCEED THE PURCHASE PRICE PAID FOR THE PRODUCTS.

7. Confidential Information. Buyer acknowledges and agrees that Confidential Information has been and will be received in confidence and will remain the property of Seller. Buyer further agrees that it will not use Seller's Confidential Information for any purpose other than for the benefit of Seller and shall return all such Confidential Information to Seller within thirty (30) days upon request.

8. Loss to Buyer's Property. Buyer's Property will be considered obsolete and may be destroyed by Seller after two (2) consecutive years have elapsed without Buyer ordering the Products manufactured using Buyer's Property. Also, Seller shall not be responsible for any loss or damage to Buyer's Property while it is in Seller's possession or control.

9. Special Tooling. Seller may impose a tooling charge for any Special Tooling. Special Tooling shall be and remain Seller's property. In no event will Buyer acquire any interest in the Special Tooling, even if such Special Tooling has been specially converted or adapted for manufacture of Goods for Buyer and notwithstanding any charges paid by Buyer. Unless otherwise agreed, Seller has the right to alter, discard or otherwise dispose of any Special Tooling or other property owned by Seller in its sole determination at any time.

10. Security Interest. To secure payment of all sums due from Buyer, Seller retains a security interest in all Products delivered to Buyer and, Buyer's acceptance of these Terms is deemed to be a Security Agreement under the Uniform Commercial Code. Buyer authorizes Seller as its attorney to execute and file on Buyer's behalf all documents Seller deems necessary to perfect Seller's security interest.

11. User Responsibility. Buyer, through its own analysis and testing, is solely responsible for making the final selection of the Products and assuring that all performance, endurance, maintenance, safety and warning requirements of the application of the Products are met. Buyer must analyze all aspects of the application and follow applicable industry standards, specifications, and any technical information provided with the Quote or the Products, such as Seller's instructions, guides and specifications. If Seller provides options of or for Products based upon data or specifications provided by Buyer, Buyer is responsible for determining that such data and specifications are suitable and sufficient for all applications and reasonably foreseeable uses of the Products. In the event Buyer is not the end-user of the Products, Buyer will ensure such end-user complies with this paragraph.

12. Use of Products, Indemnity by Buyer. Buyer shall comply with all instructions, guides and specifications provided by Seller with the Quote or the Products. If Buyer uses or resells the Products in any way prohibited by Seller's instructions, guides or specifications, or Buyer otherwise fails to comply with Seller's instructions, guides and specifications, Buyer acknowledges that any such use, resale, or non-compliance is at Buyer's sole risk. Further, Buyer shall indemnify, defend, and hold Seller harmless from any losses, claims, liabilities, damages, lawsuits, judgments and costs (including attorney fees and defense costs), whether for personal injury, property damage, intellectual property infringement or any other claim, arising out of or in connection with: (a) improper selection, design, specification, application, or any misuse of Products; (b) any act or omission, negligent or otherwise, of Buyer; (c) Seller's use of Buyer's Property; (d) damage to the Products from an external cause, repair or attempted repair by anyone other than Seller, failure to follow instructions, guides and specifications provided by Seller, use with goods not provided by Seller, or opening, modifying, deconstructing, tampering with or repackaging the Products; or (e) Buyer's failure to comply with these Terms, including any legal or administrative proceedings, collection efforts, or other actions arising from or relating to such failure to comply. Seller shall not indemnify Buyer under any circumstance except as otherwise provided in these Terms.

13. Cancellations and Changes. Buyer may not cancel or modify, including but not limited to movement of delivery dates for the Products, any order for any reason except with Seller's written consent and upon terms that will indemnify, defend and hold Seller harmless against all direct, incidental and consequential loss or damage and any additional expense. Seller, at any time, may change features, specifications, designs and availability of Products.

14. Assignment. Buyer may not assign its rights or obligations without the prior written consent of Seller.

15. Force Majeure. Seller is not liable for delay or failure to perform any of its obligations by reason of any events or circumstances beyond its reasonable control. Such circumstances include without limitation: accidents, labor disputes or stoppages, government acts or orders, acts of nature, pandemics, epidemics, other widespread illness, or public health emergency, cyber related disruptions, cyber-attacks, ransomware sabotage, delays or failures in delivery from carriers or suppliers, shortages of materials, sudden increases in the price of raw material or components, shutdowns or slowdowns affecting the supply of raw materials or components, or the transportation thereof, oil shortages or oil price increases, energy crisis, energy or fuel interruption, war (whether declared or not) or the serious threat of same, riots, rebellions, acts of terrorism, embargoes, fire or any reason whether similar to the foregoing or otherwise. Seller will resume performance as soon as practicable after the event of force majeure has been removed. All delivery dates affected by an event of force majeure shall be tolled for the duration of such event of force majeure and rescheduled for mutually agreed dates as soon as practicable after the event of force majeure ceases to exist. The right to allocate capacity is in the Seller's sole discretion. An event of force majeure shall not include financial distress, insolvency, bankruptcy, or other similar conditions affecting one of the parties, affiliates and/or sub¬contractors. An event of force majeure in the meaning of these Terms means any circumstances beyond Seller's control that permanently or temporarily hinders performance, even where that circumstance was already foreseen. Buyer shall not be entitled to cancel any orders following its claim of an event of force majeure.

16. Waiver and Severability. Failure to enforce any provision of these Terms will not invalidate that provision; nor will any such failure prejudice either party's right to enforce that provision in the future. Invalidation of any provision of these Terms shall not invalidate any other provision herein and, the remaining provisions will remain in full force and effect.

17. Duration. Unless otherwise stated in the Quote, any agreement governed by or arising from these Terms shall: (a) be for an initial duration of one (1) year; and (b) shall automatically renew for successive one-year terms unless terminated by Buyer with at least 180-days written notice to Seller or if Seller terminates the agreement pursuant to Section 19 of these Terms.

18. Termination. Seller may, without liability to Buyer, terminate any agreement governed by or arising from these Terms for any reason and at any time by giving Buyer thirty (30) days prior written notice. Seller may immediately terminate, in writing, if Buyer: (a) breaches any provision of these Terms, (b) becomes or is deemed insolvent, (c) appoints or has appointed a trustee, receiver or custodian for all or any part of Buyer's property,(d) files a petition for relief in bankruptcy on its own behalf, or one is filed against Buyer by a third party, (e) makes an assignment for the benefit of creditors; or (f) dissolves its business or liquidates all or a majority of its assets.

19. Ownership of Rights. Buyer agrees that (a) Seller (and/or its affiliates) owns or is the valid licensee of Seller's IP and (b) the furnishing of information, related documents or other materials by Seller to Buyer does not grant or transfer any ownership interest or license in or to Seller's IP to Buyer, unless expressly agreed in writing. Without limiting the foregoing, Seller retains ownership of all Software supplied to Buyer. In no event shall Buyer obtain any greater right in and to the Software than a right in a license limited to the use thereof and subject to compliance with any other terms provided with the Software. Buyer further agrees that it will not, directly or through intermediaries, reverse engineer, decompile, or disassemble any Software (including firmware) comprising or contained within a Product, except and only to the extent that such activity may be expressly permitted, either by applicable law or, in the case of open source software, the applicable open source license.

20. Indemnity for Infringement of Intellectual Property Rights. Seller is not liable for infringement of any Intellectual Property Rights except as provided in this Section. Seller will defend at its expense and will pay the cost of any settlement or damages awarded in an action brought against Buyer based on a third-party claim that one or more of the Products infringes the Intellectual Property Rights of a third party in the country of delivery of the Products by Seller to Buyer. Seller's obligation to defend and indemnify Buyer is contingent on Buyer notifying Seller within ten (10) days after Buyer becomes aware of any such claim, and Seller having sole control over the defense of the claim including all negotiations for settlement or compromise. If one or more Products is subject to such a claim, Seller may, at its sole expense and option, procure for Buyer the right to continue using the Products, replace or modify the Products to render them non-infringing, or offer to accept return of the Products and refund the purchase price less a reasonable allowance for depreciation. Seller has no obligation or liability for any claim of infringement: (i) arising from information provided by Buyer (including Seller's use of Buyer's Property); or (ii) directed to any Products for which the designs are specified in whole or part by Buyer; or (iii) resulting from the modification, combination or use in a system of any Products. The foregoing provisions of this Section constitute Seller's sole and exclusive liability and Buyer's sole and exclusive remedy for claims of infringement of Intellectual Property Rights.

21. Governing Law. These Terms, the terms of any Quote, and the sale and delivery of all Products are deemed to have taken place in, and shall be governed and construed in accordance with, the laws of the State of Ohio, as applicable to contracts executed and wholly performed therein and without regard to conflicts of laws principles. Buyer irrevocably agrees and consents to the exclusive jurisdiction and venue of the courts of Cuyahoga County, Ohio with respect to any dispute, controversy or claim arising out of or relating to the sale and delivery of the Products.

22. Entire Agreement. These Terms, along with the terms set forth in the Quote, forms the entire agreement between the Buyer and Seller and constitutes the final, complete and exclusive expression of the terms of sale and purchase. In the event of a conflict between any term set forth in the Quote and these Terms, the terms set forth in the Quote shall prevail. All prior or contemporaneous written or oral agreements or negotiations with respect to the subject matter shall have no effect. No modification to these Terms will be binding on Seller unless agreed to in a writing that is signed by an authorized representative of Seller, excluding email correspondence, 'clickwrap' or other purported electronic assent to different or additional terms. Sections 2-25 of these Terms shall survive termination or cancellation of any agreement governed by or arising from these Terms.

23. No 'Wrap' Agreements/No Authority to Bind. Seller's clicking any buttons or any similar action, such as clicking "I Agree" or "Confirm," to utilize Buyer's software or webpage for the placement of orders, is NOT an agreement to Buyer's Terms and Conditions. NO EMPLOYEE, AGENT OR REPRESENTATIVE OF SELLER HAS THE AUTHORITY TO BIND SELLER BY THE ACT OF CLICKING ANY BUTTON OR SIMILAR ACTION ON BUYER'S WEBSITE OR PORTAL.

24. Compliance with Laws. Buyer agrees to comply with all applicable laws, regulations, and industry and professional standards, including those of the United States of America, and the country or countries in which Buyer may operate, including without limitation the U.S. Foreign Corrupt Practices Act ("FCPA"), the U.S. Anti-Kickback Act ("Anti-Kickback Act"), U.S. and E.U. export control and sanctions laws ("Export Laws"), the U.S. Food Drug and Cosmetic Act ("FDCA"), and the rules and regulations promulgated by the U.S. Food and Drug Administration ("FDA"), each as currently amended. Buyer agrees to indemnify, defend, and hold harmless Seller from the consequences of any violation of such laws, regulations and standards by Buyer, its employees or agents. Buyer represents that it is familiar with all applicable provisions of the FCPA, the Anti-Kickback Act, Export Laws, the FDCA and the FDA and certifies that Buyer will adhere to the requirements thereof and not take any action that would make Seller violate such requirements. Buyer represents and agrees that Buyer will not make any payment or give anything of value, directly or indirectly, to any governmental official, foreign political party or official thereof, candidate for foreign political office, or commercial entity or person, for any improper purpose, including the purpose of influencing such person to purchase Products or otherwise benefit the business of Seller. Buyer further represents and agrees that it will not receive, use, service, transfer or ship any Products from Seller in a manner or for a purpose that violates Export Laws or would cause Seller to be in violation of Export Laws. Buyer agrees to promptly and reliably provide Seller all requested information or documents, including end-user statements and other written assurances, concerning Buyer's ongoing compliance with Export Law. 9/22

5/26 / Catalog HY08-SB1137-8/NA

Parker Hannifin Corporation
Hydraulic Actuator Division
500 South Wolf Road
Des Plaines, IL 60016 USA
phone (847) 298-2400
fax (800) 892-1008
www.parker.com/schraderbellows

Authorized Distributor
MONILEK OILFIELD

E: sales@monilek.com
W: www.monilekgroup.com