Authorized Distributor
MONILEK OILFIELD

E: sales@monilek.com
W: www.monilekgroup.com

Check Valves, Filters and Relief Valves

Catalog 4135-CV

April 2019

aerospace
climate control
electromechanical
filtration
fluid & gas handling
hydraulics
pneumatics
process control
sealing & shielding

ENGINEERING YOUR SUCCESS.

Parker Hannifin Corporation
Instrumentation Products Division
Jacksonville, AL USA
http://www.parker.com/ipdus

Table of Contents

Description ..... **Page**

C Series Check Valves 2

CB Series Check Valves 6
CBF Series Check Valves 6

CO Series Check Valves 10

LC Series Lift Check Valves 14

F Series Inline Filters 16

FT Series Tee Filters 22

RH4 Series Relief Valves 26

RL4 Series Relief Valves 30

BV Series Bleed Valves 34

PG Series Purge Valves 38

Available End Identification 38

Offer of Sale 39

⚠ WARNING – USER RESPONSIBILITY

FAILURE OR IMPROPER SELECTION OR IMPROPER USE OF THE PRODUCTS DESCRIBED HEREIN OR RELATED ITEMS CAN CAUSE DEATH, PERSONAL INJURY AND PROPERTY DAMAGE.

This document and other information from Parker-Hannifin Corporation, its subsidiaries and authorized distributors provide product or system options for further investigation by users having technical expertise.

The user, through its own analysis and testing, is solely responsible for making the final selection of the system and components and assuring that all performance, endurance, maintenance, safety and warning requirements of the application are met. The user must analyze all aspects of the application, follow applicable industry standards, and follow the information concerning the product in the current product catalog and in any other materials provided from Parker or its subsidiaries or authorized distributors.

To the extent that Parker or its subsidiaries or authorized distributors provide component or system options based upon data or specifications provided by the user, the user is responsible for determining that such data and specifications are suitable and sufficient for all applications and reasonably foreseeable uses of the components or systems.

Offer of Sale

The items described in this document are hereby offered for sale by Parker-Hannifin Corporation, its subsidiaries or its authorized distributors. This offer and its acceptance are governed by the provisions stated in the detailed "Offer of Sale" elsewhere in this document or available at www.parker.com/ipdus.

© Copyright 2019 Parker Hannifin Corporation. All Rights Reserved.

Parker Hannifin Corporation
Instrumentation Products Division
Jacksonville, AL USA
http://www.parker.com/ipdus

C

Introduction

Parker C Series Check Valves are designed for uni-directional flow control of fluids and gases in industries such as chemical processing, oil and gas production and transmission, pharmaceutical, pulp and paper, power and utilities.

Features

- Resilient, custom molded, blow-out resistant seat design
- Back stopped poppet minimizes spring stress
- 100% factory tested for both crack and reseat
- Cracking pressures include: 1/3, 1, 10, 25 psi.
- Port connections include male and female NPT, CPI™, A-LOK®, VacuSeal, BSP, SAE and Seal-Lok®
- Heat code traceability

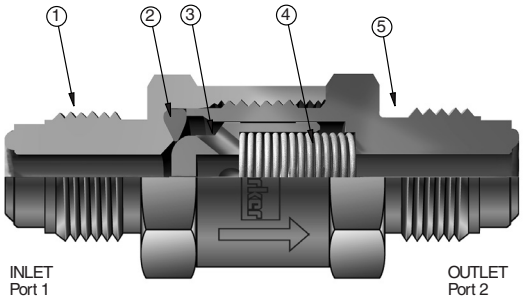

Model Shown: 4V-C4L-1-SS

Specifications

Pressure Rating:**

316 SS – 1/8" to 3/4": .....6000 psig (414 bar) CWP
1": .....5000 psig (345 bar) CWP
PTFE Seats, all sizes: .....4000 psig (276 bar) CWP
Brass – 1/8" to 1": .....3000 psig (207 bar) CWP

Temperature Rating:

Fluorocarbon Rubber..... -15°F to +400°F (-26°C to +204°C)
Nitrile ..... -30°F to +275°F (-34°C to +135°C)
Ethylene Propylene Rubber.. -70°F to +275°F (-57°C to +135°C)
Neoprene Rubber..... -45°F to +250°F (-43°C to +121°C)
PTFE ..... -65°F to +400°F (-54°C to +204°C)
Highly Fluorinated Fluorocarbon Rubber
..... -15°F to +200°F (-26°C to +93°C)

Orifice: .....078" to .656" (2.0 mm to 16.7 mm)

C_V: ..... .18 to 6.56

Materials of Construction

Item #	Part Description	Stainless Steel	Brass
1	Cap	ASTM A 276, Type 316	ASTM B 16, Alloy C36000
2	Seat*	Fluorocarbon Rubber*	
3	Poppet	ASTM A 479, Type 316	ASTM B 16, Alloy C36000
4	Spring	316 Stainless Steel	
5	Body	ASTM A 276, Type 316	ASTM B 16, Alloy C36000

* Optional seat materials are available. See How to Order section. Lubrication: Perfluorinated Polyether.

Note: PTFE seated valves employ an additional PTFE coated 316 SS gasket between the seat and the body and are distinguishable from elastomeric seated valves by the gap designed between the body and cap.

**See Pressure Rating note on page 4.

Flow Calculations with 1000 psig (69 bar) Inlet Pressure

Valve Series	Maximum C_V	Pressure Drop ΔP		Water @ 60°F (16°C)		Air @ 60°F (16°C)	
		psig	bar	gpm	m3/hr	SCFM	m3/hr
C2	0.31	10	0.7	1.0	0.2	30.8	52.1
		50	3.4	2.2	0.5	67.2	112.8
		100	6.9	3.1	0.7	92.0	155.3
C4	0.75	10	0.7	2.4	0.5	74.6	126.1
		50	3.4	5.3	1.2	162.7	273.0
		100	6.9	7.5	1.7	222.8	376.2
C6	2.26	10	0.7	7.1	1.6	225.3	380.9
		50	3.4	16.0	3.6	495.2	831.0
		100	6.9	22.6	5.1	685.1	1157.2
C8	3.53	10	0.7	11.2	2.5	352.0	595.0
		50	3.4	25.0	5.6	774.3	1299.4
		100	6.9	35.3	8.0	1072.4	1811.6
C12	6.01	10	0.7	19.0	4.3	596.6	1008.3
		50	3.4	42.5	9.6	1287.5	2160.4
		100	6.9	60.1	13.7	1738.5	2934.5
C16	6.56	10	0.7	20.7	4.7	648.9	1096.6
		50	3.4	46.4	10.5	1379.4	2314.7
		100	6.9	65.6	14.9	1824.4	3077.6

Parker Hannifin Corporation
Instrumentation Products Division
Jacksonville, AL USA
http://www.parker.com/ipdus

Crack and Re-Seal Performance

Check Valve Rated Crack Pressure		Minimum Acceptable Crack Pressure		Maximum Acceptable Crack Pressure		Maximum Re-seal Back Pressure	
psig	bar	psig	bar	psig	bar	psig	bar
1/3	0.02	0	0.00	1	0.07	4	0.28
1	0.07	0	0.00	3	0.21	4	0.28
10	0.69	7	0.48	13	0.90	3 BCP	0.21 BCP
25	1.72	20	1.38	30	2.07	4 BCP	0.28 BCP

BCP means "Below Cracking Pressure."

Cracking pressure is defined as the upstream pressure at which a detectable flow is measured.
Re-seal pressure is defined as the downstream pressure at which the check valve closes bubble-tight.

Example: For a valve with a spring having a rated cracking pressure of 25 psig (1.72 bar), the actual cracking pressure ranges between 20 and 30 psig (1.38 and 2.07 bar). The re-seal pressure range would be 16 to 20 psig (1.10 to 1.38 bar). Check valves having springs with rated crack pressures of 3 psig (0.21 bar) or less may require up to 4 psig (0.28 bar) back pressure to re-seal bubble-tight.

Note: Check valves which are not actuated for a period of time may initially crack at higher than the above crack pressure ranges.
PTFE seated valves require a minimum back pressure of 100 psig (6.9 bar) to insure a leak-tight re-seal.

Pressure vs. Temperature

Note: To determine MPa, multiply bar by 0.1

Nitrile Seat

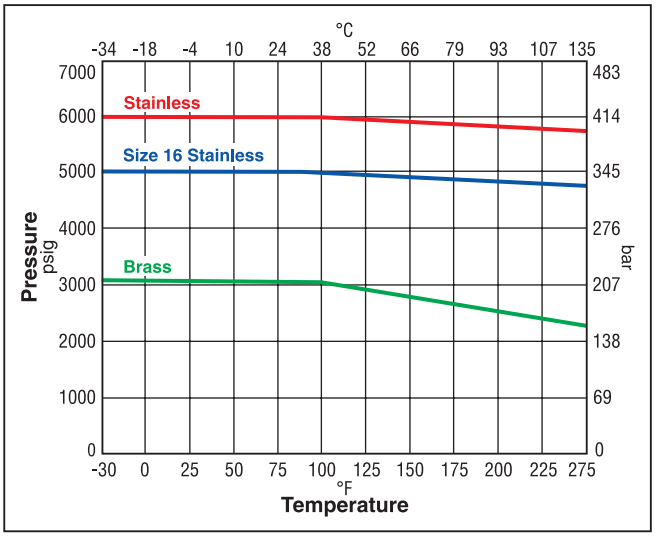

Neoprene Seat

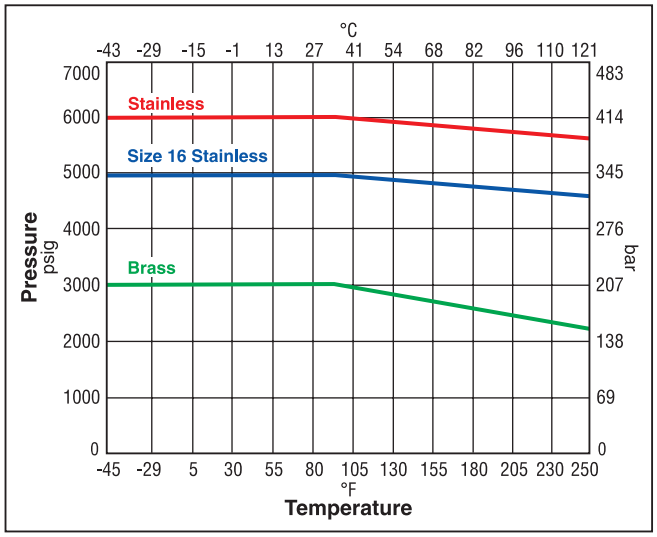

Fluorocarbon Seat

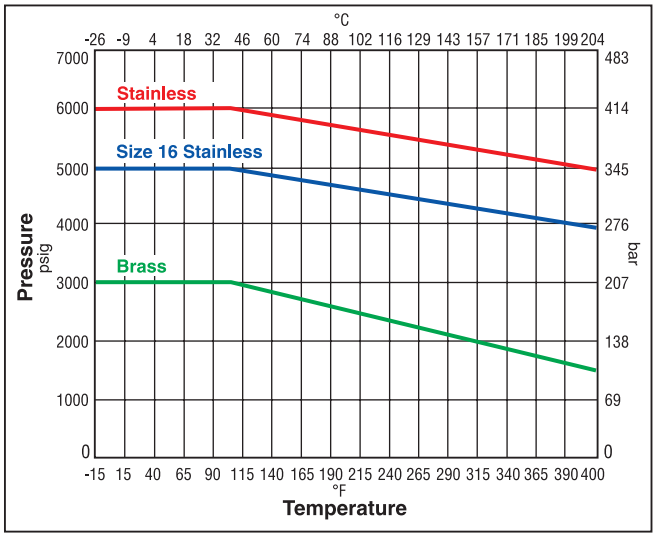

Ethylene Propylene Seat

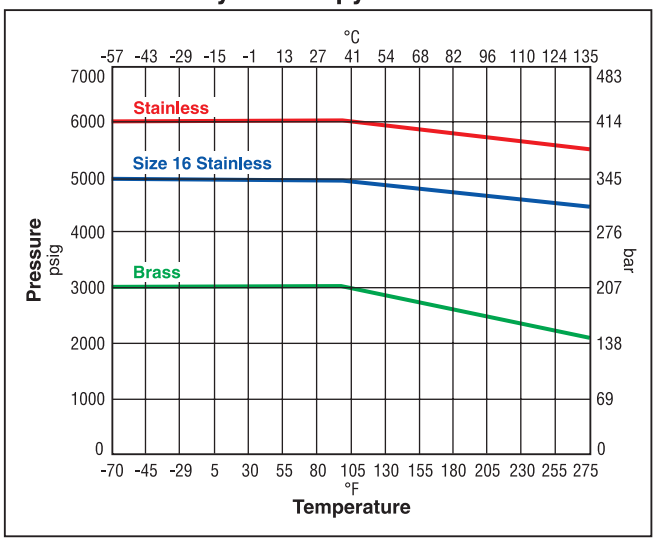

Parker Hannifin Corporation
Instrumentation Products Division
Jacksonville, AL USA
http://www.parker.com/ipdus

C

How to Order

The part number sequence identifies product characteristics as shown in the example below

Example: Describes a C Series Check Valve with 3/4" CPI™ compression inlet and outlet ports on a 3/4" in line body, a 25 psi cracking pressure, nitrile seat and brass body construction.

12Z	–	C12L	–	25	–	BN	–	B
Connection Size & Type		Body Size		Crack Pressure		Seat Material		Body Material

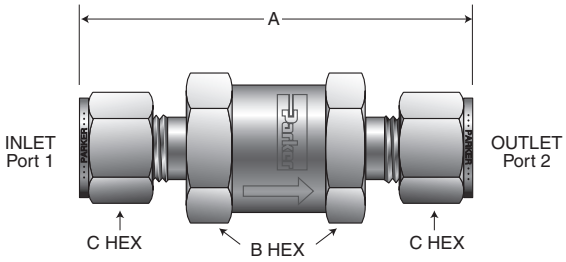

Model Shown: 4Z-C4L-1-SS

Dimensions in inches (millimeters) are for reference only, subject to change.

Flow Data/Dimensions

Basic Part Number	End Connections	Flow Data			Dimensions				Optional		
	Inlet & Outlet Port 1 & Port 2	Orifice		C_V	A†		B	C	Crack Pressure	Seat Material	Body Material
		Inch	mm		Inch	mm	Inch	Inch			
2A-C2L-1-SS	1/8" A-LOK® Compression	.093	2.4	.22	2.29	58.2	.625	.438	**1/3** psi **10** psi **25** psi	**BN** Nitrile **EPR** Ethylene Propylene Rubber **NE** Neoprene Rubber ****T** PTFE *****KZ** Highly Fluorinated Fluorocarbon Rubber	**B** Brass
2F-C2L-1-SS	1/8" Female NPT	.125	3.2	.31	1.86	47.2	.625	–			
2KF-C2L-1-SS	1/8" Female BSP/ISO Tapered	.125	3.2	.31	1.86	47.2	.625	–			
2KM-C2L-1-SS	1/8" Male BSP/ISO Tapered	.125	3.2	.31	1.77	45.0	.625	–			
2M-C2L-1-SS	1/8" Male NPT	.125	3.2	.31	1.77	45.0	.625	–			
2Z-C2L-1-SS	1/8" CPI™ Compression	.093	2.4	.22	2.29	58.2	.625	.438			
4A-C4L-1-SS	1/4" A-LOK® Compression	.187	4.7	.75	2.42	61.5	.750	.563			
4F-C4L-1-SS	1/4" Female NPT	.187	4.7	.75	2.40	61.0	.750	–			
4F5-C4L-1-SS	1/4" Male SAE	.172	4.4	.66	2.02	51.3	.750	–			
4G5-C4L-1-SS	1/4" Female SAE	.172	4.4	.66	2.20	55.9	.750	–			
4KF-C4L-1-SS	1/4" Female BSP/ISO Tapered	.187	4.7	.75	2.40	61.0	.750	–			
4KM-C4L-1-SS	1/4" Male BSP/ISO Tapered	.281	4.7	.75	2.18	55.4	.750	–			
4M-C4L-1-SS	1/4" Male NPT	.187	4.7	.75	2.18	55.4	.750	–			
4V-C4L-1-SS	1/4" VacuSeal	.187	4.7	.75	2.22	56.4	.750	–			
4Z-C4L-1-SS	1/4" CPI™ Compression	.187	4.7	.75	2.42	61.5	.750	.563			
M6A-C4L-1-SS	6mm A-LOK® Compression	.187	4.7	.75	2.43	61.7	.750	.551			
M6Z-C4L-1-SS	6mm CPI™ Compression	.187	4.7	.75	2.43	61.7	.750	.551			
4M4A-C4L-1-SS	1/4" Male NPT X 1/4" A-LOK® Compression	.187	4.7	.75	2.29	58.2	.750	.563			
4M4F-C4L-1-SS	1/4" Male NPT X 1/4" Female NPT	.187	4.7	.75	2.29	58.2	.750	–			
4M4Z-C4L-1-SS	1/4" Male NPT X 1/4" CPI™ Compression	.187	4.7	.75	2.29	58.2	.750	.563			
6A-C6L-1-SS	3/8" A-LOK® Compression	.281	7.1	2.09	3.27	83.1	1.000	.688			
6F-C6L-1-SS	3/8" Female NPT	.359	9.1	2.26	3.03	77.0	1.000	–			
6G5-C6L-1-SS	3/8" Female SAE	.264	6.7	2.05	2.96	75.2	1.000	–			
6M-C6L-1-SS	3/8" Male NPT	.359	9.1	2.26	2.96	75.2	1.000	–			
6Z-C6L-1-SS	3/8" CPI™ Compression	.281	7.1	2.09	3.27	83.1	1.000	.688			
M8A-C6L-1-SS	8mm A-LOK® Compression	.250	6.4	2.02	3.33	84.6	1.000	.630			
M8Z-C6L-1-SS	8mm CPI™ Compression	.250	6.4	2.02	3.33	84.6	1.000	.630			
M10A-C6L-1-SS	10mm A-LOK® Compression	.312	7.9	2.16	3.35	85.1	1.000	.748			
M10Z-C6L-1-SS	10mm CPI™ Compression	.312	7.9	2.16	3.35	85.1	1.000	.748			

** Only available with stainless steel valves.

*** Not available on C2 Series

Parker Hannifin Corporation
Instrumentation Products Division
Jacksonville, AL USA
http://www.parker.com/ipdus

C

Flow Data/Dimensions (Continued)

Dimensions in inches (millimeters) are for reference only, subject to change.

Basic Part Number	End Connections	Flow Data			Dimensions				Optional		
	Inlet & Outlet Port 1 & Port 2	Orifice		C_V	A†		B	C	Crack Pressure	Seat Material	Body Material
		Inch	mm		Inch	mm	Inch	Inch			
8A–C8L-1-SS	1/2" A-LOK® Compression	.423	10.7	3.30	4.08	103.6	1.250	.875	**1/3** psi **10** psi **25** psi	**BN** Nitrile **EPR** Ethylene Propylene Rubber **NE** Neoprene Rubber ****T** PTFE *****KZ** Highly Fluorinated Fluorocarbon Rubber	**B** Brass
8F–C8L-1-SS	1/2" Female NPT	.453	11.5	3.53	3.56	90.4	1.250	–			
8KF–C8L-1-SS	1/2" Female BSP/ISO Tapered	.453	11.5	3.53	3.56	90.4	1.250	–			
8KM–C8L-1-SS	1/2" Male BSP/ISO Tapered	.453	11.5	3.53	3.56	90.4	1.250	–			
8M–C8L-1-SS	1/2" Male NPT	.453	11.5	3.53	3.56	90.4	1.250	–			
8V–C8L-1-SS	1/2" VacuSeal	.406	10.3	3.17	3.56	90.4	1.250	–			
8Z–C8L-1-SS	1/2" CPI™ Compression	.423	10.7	3.30	4.08	103.6	1.250	.875			
M12A–C8L-1-SS	12mm A-LOK® Compression	.375	9.5	2.93	4.06	103.1	1.250	.866			
M12Z–C8L-1-SS	12mm CPI™ Compression	.375	9.5	2.93	4.06	103.1	1.250	.866			
12A–C12L-1-SS	3/4" A-LOK® Compression	.594	15.1	6.01	4.34	110.2	1.375	1.125			
12F–C12L-1-SS	3/4" Female NPT	.594	15.1	6.01	4.09	103.9	1.375	–			
12M–C12L-1-SS	3/4" Male NPT	.594	15.1	6.01	4.09	103.9	1.375	–			
12Z–C12L-1-SS	3/4" CPI™ Compression	.594	15.1	6.01	4.34	110.2	1.375	1.125			
M22A–C12L-1-SS	22mm A-LOK® Compression	.594	15.1	6.01	4.30	109.2	1.375	1.260			
M22Z–C12L-1-SS	22mm CPI™ Compression	.594	15.1	6.01	4.30	109.2	1.375	1.260			
16A–C16L-1-SS	1" A-LOK® Compression	.656	16.7	6.56	4.63	117.6	1.625	1.500			
16F–C16L-1-SS	1" Female NPT	.656	16.7	6.56	4.84	122.9	1.625	–			
16F5–C16L-1-SS	1" Male SAE	.656	16.7	6.56	4.10	104.1	1.625	–			
16G5–C16L-1-SS	1" Female SAE	.656	16.7	6.56	4.84	122.9	1.625	–			
16M–C16L-1-SS	1" Male NPT	.656	16.7	6.56	4.52	114.8	1.625	–			
16Z–C16L-1-SS	1" CPI™ Compression	.656	16.7	6.56	4.63	117.6	1.625	1.500			
M25A–C16L-1-SS	25mm A-LOK® Compression	.656	16.7	6.56	4.74	120.4	1.625	1.496			
M25Z–C16L-1-SS	25mm CPI™ Compression	.656	16.7	6.56	4.74	120.4	1.625	1.496			

Pressure Rating and Tubing Selection: For working pressures of A-LOK® and CPI™ tube connections, please see the Instrument Tubing Selection Guide (Bulletin 4200-TS), found in the Technical Section of the Parker Instrumentation Process Control Binder, or the Parker Instrument Tube Fitting Installation Manual (Bulletin 4200-B4).

For working pressures of valves with external or internal pipe threads, please see Catalog 4260, Instrumentation Pipe Fittings.

† For CPI™ and A-LOK®, dimensions are measured with nuts in the finger tight position.

Options

Oxygen Cleaning – Add the suffix -C3 to the end of the part number to receive valves cleaned in accordance with ASTM G93 level C, class 500. This ASTM details cleaning methods and cleanliness levels for materials and equipment used in oxygen-enriched environments. **Example: 4A-C4L-1-BN-SS-C3**

Kit Information

To order repair kits for the C Series Check Valves simply fill in the designators from the chart below.

Size	Crack Pressure	Seat Material	
C2 **C4** **C8** **C12** **C16**	**1/3** psi **1** psi **10** psi **25** psi	**V** Fluorocarbon Rubber **BN** Nitrile **EPR** Ethylene Propylene Rubber **NE** Neoprene Rubber ***T** PTFE **KZ** Highly Fluorinated Fluorocarbon	

*PTFE kits can only be used to replace factory installed PTFE seats. It cannot be interchanged with seats of any other material.

Examples: KIT-C8-10-V, KIT-C16-25-BN

Check Valve Kits Contain:
Seat
Spring
Instructions

Parker Hannifin Corporation
Instrumentation Products Division
Jacksonville, AL USA
http://www.parker.com/ipdus

Introduction

Parker CB and CBF Series Check Valves are designed for accurate uni-directional flow control of liquids and gases. The unique floating ball is designed for applications in power generation, chemical processing, oil & gas production, and other demanding critical service areas. The CB/CBF Series are specifically targeted to minimize check valve maintenance repair and replacement on dual fuel gas turbines. Specific issues addressed in the design include, but are not limited to seat leakage, coking, repair and maintenance. All of these issues directly affect turbine efficiency and operating costs. The advanced seat materials of the CB/CBF Series Check Valves are particularly well suited for higher temperature applications requiring high integrity leak rates and re-sealing capabilities.

Features

- Rugged and reliable floating ball design optimizes sealing characteristics in demanding turbine applications
- Hard PTFE coated ball cage resists poppet “stick” commonly experienced with fuel oil coking.
- Fully field serviceable with Parker rebuild kits. Replace seats in minutes without special tools.
- Advanced reinforced PTFE copolymer seat materials designed by Parker for demanding applications such as air purge and fuel oil.
- Integral “last chance” filter option for seat and nozzle protection.
- To even further reduce turbine downtime during repairs, utilize Parker’s metal flexible hoses.

Specifications

Shell Pressure Rating:

..... 3000 psi CWP

Standard Crack Pressures:

..... 1, 5, 10, 15, 50, 100, 120

Seat Materials, Back Pressure and Temperature Ratings:

Parkerfill..... 1000 psi @ 100°F
..... 300 psi @ 450°F
Parker Carbon ..... 2500 psi @ 100°F
..... 1250 psi @ 450°F

Parkerfill is a PTFE copolymer reinforced with carbon and graphite.
Parker Carbon is a PTFE copolymer reinforced with carbon.

Materials of Construction

CB Series Check Valve

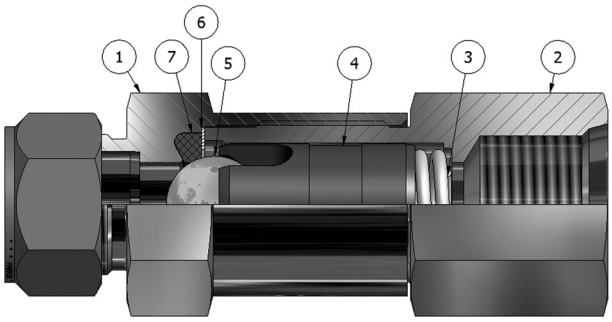

Item #	Part	Stainless Valve
1	Body	ASTM A276, Type 316
2	Cap	ASTM A276, Type 316
3	Crack Spring	316 Stainless Steel
4	Ball Cage	ASTM A276, Type 316
5	Ball	440C Stainless Steel
6	Body Washer	316 SS PTFE Coated
7	Seat	Parkerfill, Parker Carbon

CBF Series Filter Check Valve

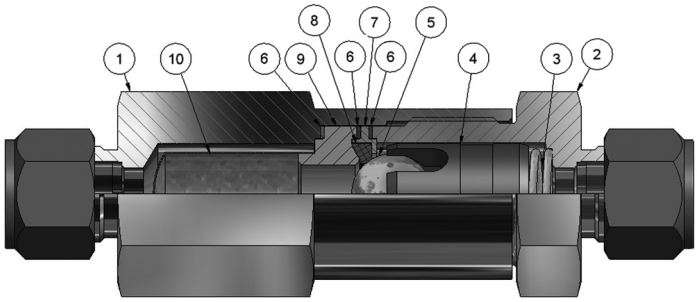

Item #	Part	Stainless Valve
1	Cap	ASTM A276, Type 316
2	Body	ASTM A276, Type 316
3	Crack Spring	316 Stainless Steel
4	Ball Cage	ASTM A276, Type 316 Hard PTFE Coated
5	Ball	440C SS
6	Body Seal	Grafoil®
7	Seat Retainer	316 Stainless Steel
8	Seat	Parkerfill, Parker Carbon
9	Filter Base	316 Stainless Steel
10	Filter Element	Perforated 316 SS Sheet

Grafoil® is a registered trademark of GrafTech International Holdings, Inc.

Parker Hannifin Corporation
Instrumentation Products Division
Jacksonville, AL USA
http://www.parker.com/ipdus

Flow Curves

CB6 Check Valve

Flow Rate vs. Pressure Drop
CB-Series Check Valve – Size CB6
5 PSI Crack Pressure

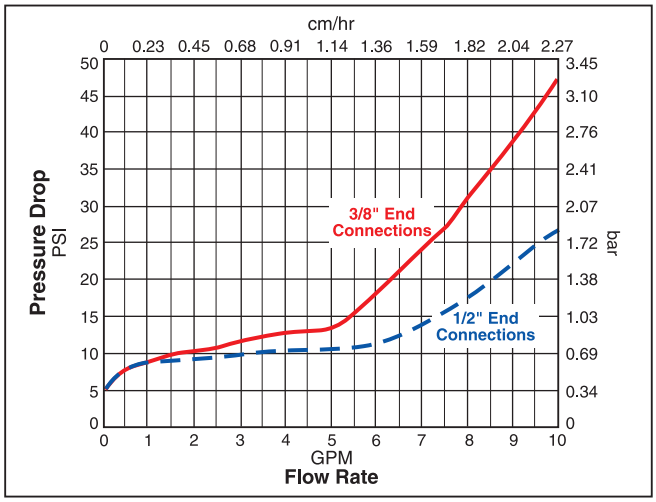

CB12 Check Valve

Flow Rate vs. Pressure Drop
CB-Series Check Valve – Size CB12
3/4" End Connections

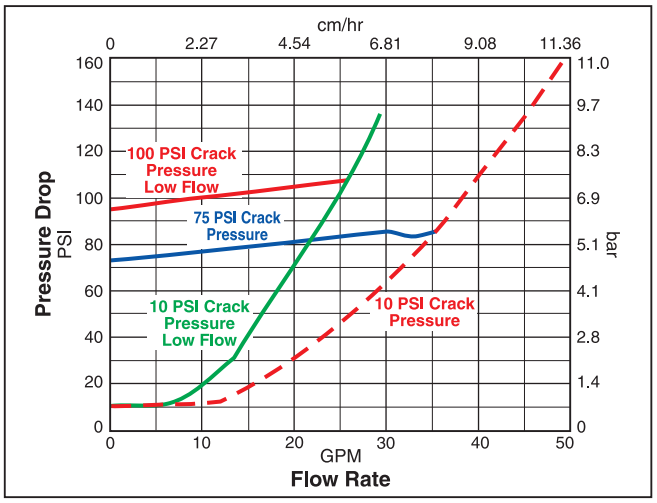

CB8 Check Valve

Flow Rate vs. Pressure Drop
CB-Series Check Valve – Size CB8
1/2" End Connections

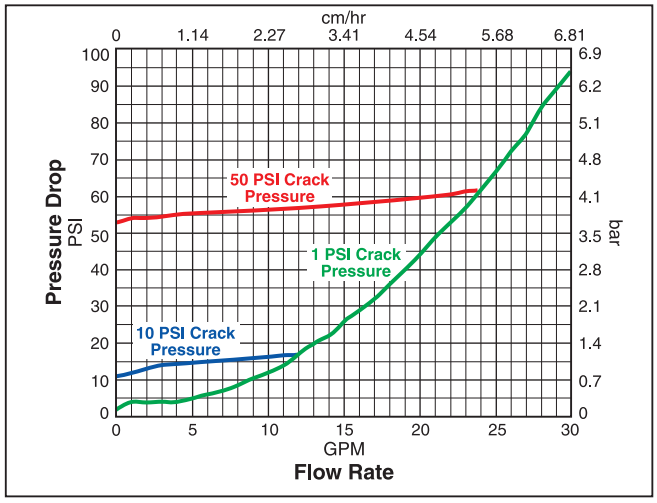

CBF8 Filter Check Valve

Flow Rate vs. Pressure Drop
CB-Series Check Valve – Size CBF8
1/2" End Connections – 380 Micron Filter

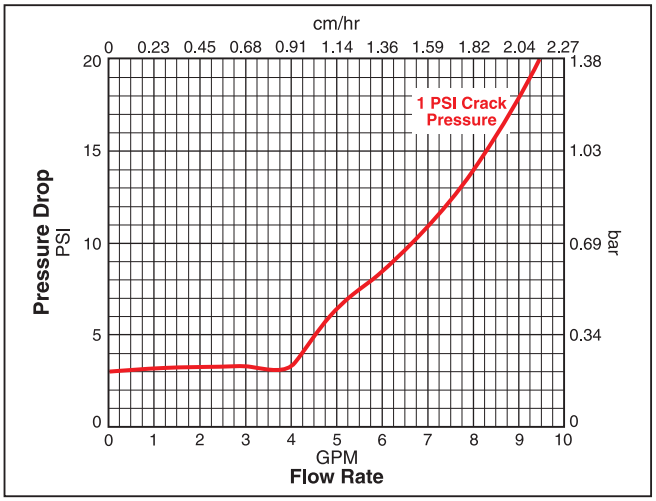

Parker Hannifin Corporation
Instrumentation Products Division
Jacksonville, AL USA
http://www.parker.com/ipdus

Dimensions

Dimensions in inches (millimeters) are for reference only, subject to change.

CB Series Check Valve

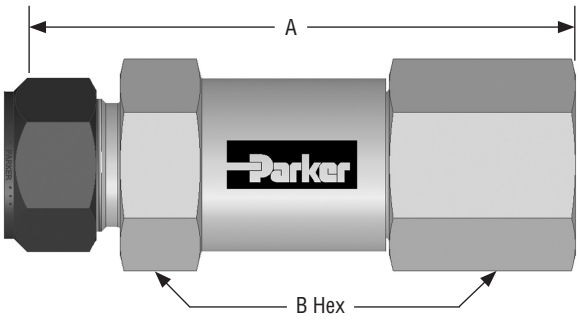

CBF Series Filter Check Valve

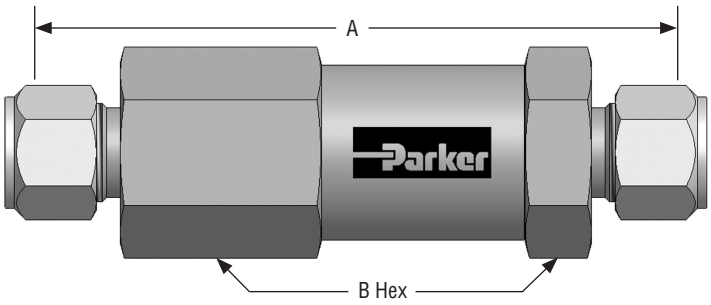

CB Series Filter Check Valve

Basic Part Number	End Connections Inlet & Outlet Port 1 & Port 2	Dimensions A	Dimensions B Hex	Optional Crack Pressure	Optional Seat Material
6A-CB6L-1-PC-SS	3/8" A-LOK®	2.72	1.00	**5** psi **10** psi **25** psi **50** psi **75** psi **100** psi **120** psi	**PF** Parkerfill
6Z-CB6L-1-PC-SS	3/8" CPI™				
6A6M-CB6L-1-PC-SS	3/8" A-LOK® x 3/8" Male NPT	2.88			
6Z6M-CB6L-1-PC-SS	3/8" CPI™ x 3/8" Male NPT				
8A-CB6L-1-PC-SS	1/2" A-LOK®	2.78			
8Z-CB6L-1-PC-SS	1/2" CPI™				
8A8M-CB6L-1-PC-SS	1/2" A-LOK® x 3/8" Male NPT	2.98			
8Z8M-CB6L-1-PC-SS	1/2" CPI™ x 3/8" Male NPT				
8A-CB8L-1-PC-SS	1/2" A-LOK®	3.30	1.25		
8Z-CB8L-1-PC-SS	1/2" CPI™				
8A8G5-CB8L-1-PC-SS	1/2" A-LOK® x 1/2" Female SAE	3.44			
8Z8G5-CB8L-1-PC-SS	1/2" CPI™ x 1/2" Female SAE				
8X8G5-CB8L-1-PC-SS	1/2" Male JIC 37° Flare x 1/2" Female SAE	3.48			
10A-CB8L-1-PC-SS	5/8" A-LOK®	3.56	1.375		
10Z-CB8L-1-PC-SS	5/8" CPI™				
12A-CB12L-1-PC-SS	3/4" A-LOK®	3.56			
12Z-CB12L-1-PC-SS	3/4" CPI™				
12A12G5-CB12L-1-PC-SS	3/4" A-LOK® x 3/4" Female SAE	3.84			
12Z12G5-CB12L-1-PC-SS	3/4" CPI™ x 3/4" Female SAE				
12X12G5-CB12L-1-PC-SS	3/4" Male JIC 37° Flare x 3/4" Female SAE	4.12			

CBF Series Filter Check Valve

Basic Part Number	End Connections Inlet Port	Dimensions A	Dimensions B Hex	Optional Crack Pressure	Optional Seat Material
8A-CBF8L-1-PC-SS-380	1/2" A-LOK®	4.50	1.375	**5** psi **10** psi **25** psi **50** psi **75** psi **100** psi **120** psi	**PF** Parkerfill
8Z-CBF8L-1-PC-SS-380	1/2" CPI™				
8A8G5-CBF8L-1-PC-SS-380	1/2" A-LOK® x 1/2" Female SA	4.70			
8Z8G5-CBF8L-1-PC-SS-380	1/2" CPI™ x 1/2" Female SA				
10A-CBF8L-1-PC-SS-380	5/8" A-LOK®	4.75			
10Z-CBF8L-1-PC-SS-380	5/8" CPI™				
12A-CBF8L-1-PC-SS-380	3/4" A-LOK®	4.75			
12Z-CB8FL-1-PC-SS-380	3/4" CPI™				

Parker Hannifin Corporation
Instrumentation Products Division
Jacksonville, AL USA
http://www.parker.com/ipdus

Repair Kits — CB Series Check Valves

Kits include seat, body gasket and crack spring. To order, fill in the designators from the chart below.

Kit	Size	Crack Pressure	Seat Material
KIT	**CB6** **CB8** **CB12**	**1** psi **5** psi **10** psi **15** psi **50** psi **100** psi **120** psi	**PF** Parkerfill **PC** Parker Carbon

Example kit part number: **KIT-CB12-120-PF**

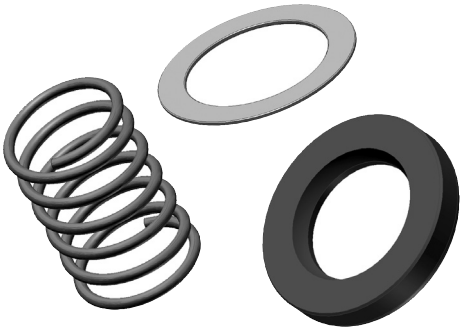

Repair Kits — CBF Series Filter Check Valves

Seal kits (KITS) include seat, body gasket and crack spring. Valve kits (KITV) include seat, body gaskets, crack spring and ball. Optional parts for valve kits include ball cage and filter. To order, fill in the designators from the chart below.

Kit	Size	Crack Pressure	Seat Material	Valve Kit Options	Filter Rating
KITS **KITV**	**CBF8**	**1** psi **5** psi **10** psi **25** psi **50** psi **75** psi **100** psi **120** psi	**PF** Parkerfill **PC** Parker Carbon	**Blank** None **1** Ball Cage **2** Filter **3** Ball Cage & Filter	**75** Microns **200** Microns **380** Microns **500** Microns (Include with filter option)

Examples:

Seal kit part number: **KITS-CBF8-10-PF**

Valve kit part number: **KITV-CBF8-10-3-200** (with Ball Cage and 200 micron filter option)

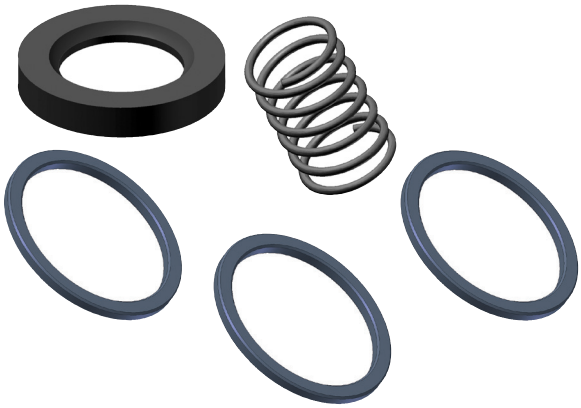

Parker Hannifin Corporation
Instrumentation Products Division
Jacksonville, AL USA
http://www.parker.com/ipdus

CO Series Check Valves

Introduction

Parker CO Series Check Valves are designed for uni-directional flow control of fluids and gases in industries such as chemical processing, oil and gas production and transmission, pharmaceutical, pulp and paper, power and utilities. The CO Series Check Valve is particularly suitable for applications requiring high integrity leak rates and re-sealing capabilities.

Features

- Seal integrity across the seat and to atmosphere is tested to 4 x 10^{-9} std atm-cc/sec (4 x 10^{-10} kPa – L/sec) for the CO4L with fluorocarbon rubber seals. All other sizes and seal materials are tested to 1 x 10^{-5} std atm-cc/sec (1 x 10^{-6} kPa – L/sec).
- Special seat seal design provides a repeatable high integrity seal and accurate cracking pressures
- 100% factory tested. Cracking pressures include: 1/3, 1, 5, 10, and 25 psi.
- Valves are available with male and female NPT, CPI™, A-LOK®, and VacuSeal
- Heat code traceability
- Color coded identification labels indicate seal material

Specifications

Pressure Rating: .....6000 psig (414 bar) CWP

Temperature Rating:

Fluorocarbon Rubber..... -15°F to 400°F (-26°C to 204°C)
Nitrile Rubber..... -30°F to 250°F (-34°C to 121°C)
Ethylene Propylene Rubber
..... -70°F to 275°F (-57°C to 135°C)
Highly Fluorinated Fluorocarbon Rubber
..... -15°F to 200°F (-26°C to 93°C)

Orifice: ..... .156" to .406" (4.0mm to 10.3mm)

C_V: ..... .43 to 2.65

Materials of Construction

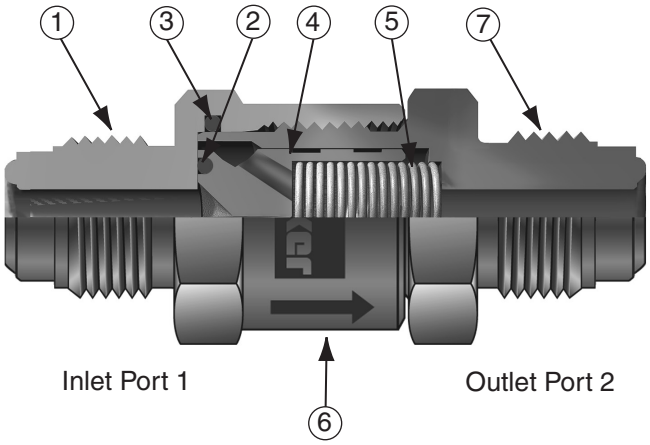

Model Shown: 4V-CO4L-5-V-SS

Item #	Part	Stainless Valve
1	Cap	ASTM A276, Type 316
2	Seat Seal	Fluorocarbon Rubber*
3	Body Seal	Fluorocarbon Rubber*
4	Poppet	ASTM A479, Type 316
5	Spring	316 Stainless Steel
6	Label	Aluminum
7	Body	ASTM A276, Type 316

*Optional seal materials are available.
Lubrication: Perfluorinated Polyether

Flow Calculations with 1000 psig (69 bar) Inlet Pressure

Valve Series	Maximum C_V	Pressure Drop ΔP		Water @ 60-1/2°F (16-1/2°C)		Air @ 60-1/2°F (16-1/2°C)	
		psig	bar	gpm	m³/hr	SCFM	m³/hr
C04	0.62	10	0.7	2.0	0.4	61.8	104.5
		50	3.4	4.4	1.0	135.7	227.7
		100	6.9	6.2	1.4	187.5	316.7
C06	1.85	10	0.7	5.9	1.3	184.4	311.6
		50	3.4	13.1	3.0	404.4	678.5
		100	6.9	18.5	4.2	557.9	942.3
C08	2.65	10	0.7	8.4	1.9	264.2	446.5
		50	3.4	18.7	4.2	580.3	973.8
		100	6.9	26.5	6.0	802.3	1355.3

Parker Hannifin Corporation
Instrumentation Products Division
Jacksonville, AL USA
http://www.parker.com/ipdus

Crack and Re-Seal Performance

Check Valve Rated Crack Pressure		Minimum Acceptable Crack Pressure		Maximum Acceptable Crack Pressure		Maximum Re-seal Back Pressure	
psig	bar	psig	bar	psig	bar	psig	bar
1/3	0.02	0	0.00	1	0.07	4	0.28
1	0.07	0	0.00	3	0.21	4	0.28
5	0.34	3	0.21	8	0.55	3 BCP	0.21 BCP
10	0.69	7	0.48	13	0.90	3 BCP	0.21 BCP
25	1.72	20	1.38	30	2.07	4 BCP	0.28 BCP

BCP means "Below Cracking Pressure."

CO

Cracking pressure is defined as the upstream pressure at which a detectable flow is measured.
Re-seal pressure is defined as the downstream pressure at which the check valve closes bubble-tight.

Example: For a valve with a spring having a rated cracking pressure of 25 psig (1.72 bar), the actual cracking pressure ranges between 20 and 30 psig (1.38 and 2.07 bar). The re-seal pressure range would be 16 to 20 psig (1.10 to 1.38 bar). Check valves having springs with rated crack pressures of 3 psig (0.21 bar) or less may require up to 4 psig (0.28 bar) back pressure to re-seal bubble-tight.

Note: Check valves which are not actuated for a period of time may initially crack at higher than the above crack pressure ranges.

Pressure vs. Temperature

Note: To determine MPa, multiply bar by 0.1

Nitrile Seal

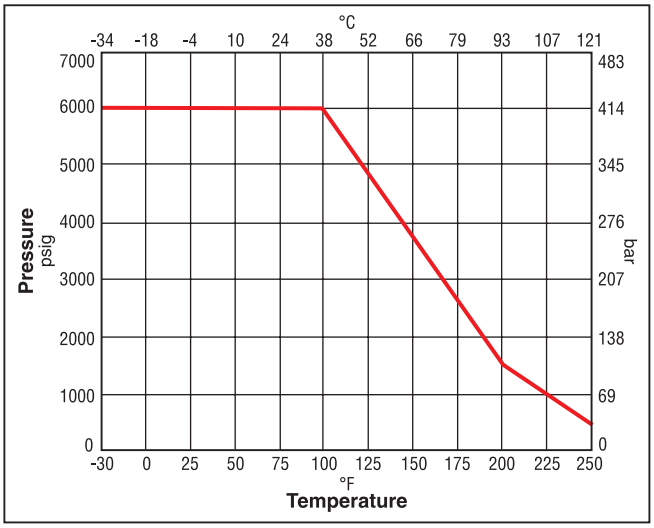

Fluorocarbon Seal

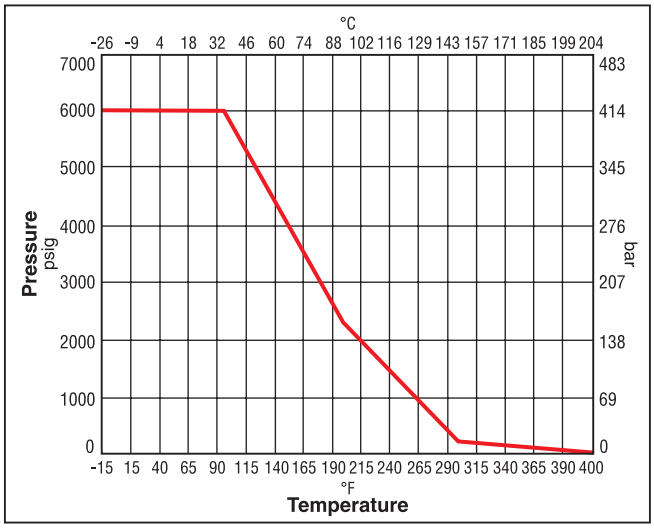

Ethylene Propylene Seal

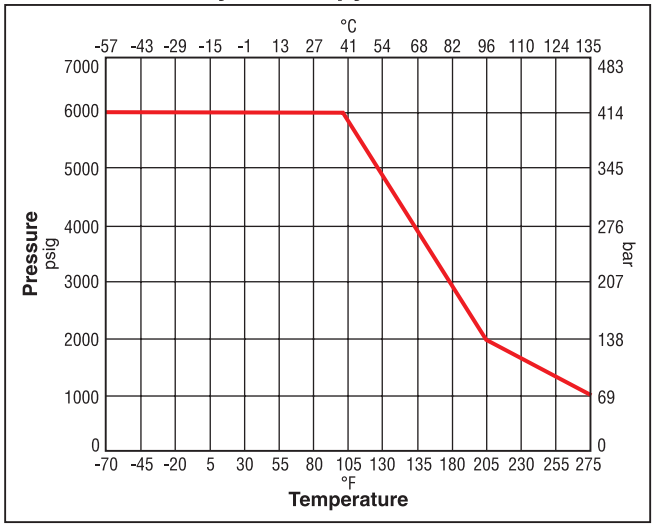

Highly Fluorinated Fluorocarbon Seal

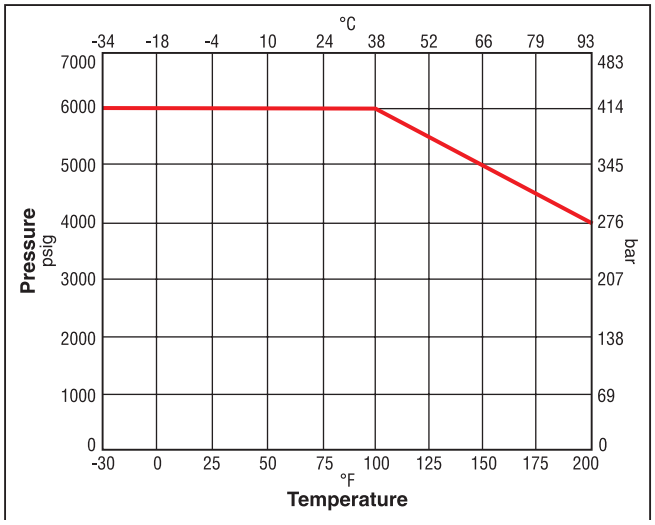

Parker Hannifin Corporation
Instrumentation Products Division
Jacksonville, AL USA
http://www.parker.com/ipdus

CO

Dimensions and Flow Data

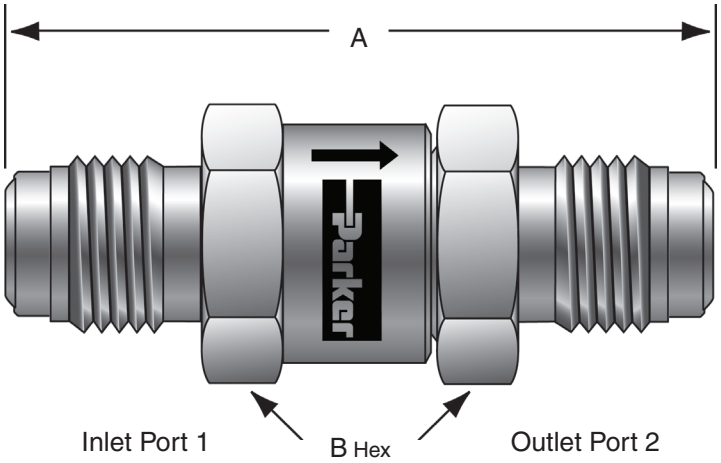

C = Hex of nuts where applicable

Model Shown: 4V-CO4L-5-KZ-SS

Label Color Cross Reference

Label Color	Seal Material
Brown	Fluorocarbon Rubber
Black	Nitrile Rubber
Purple	Ethylene Propylene Rubber
Green	All others

Testing: All valves are 100% tested for crack, re-seal, and helium leakage.

Dimensions in inches (millimeters) are for reference only, subject to change.

Basic Part Number	End Connections	Flow Data			Dimensions						Optional	
	Inlet	Orifice		C_V	A†		B		C		Crack Pressure	Seat/Seal Material
	Port 1	Inch	mm		Inch	mm	Inch	mm	Inch	mm		
4A-CO4L-1-V-SS	1/4" A-LOK® Compression	.187	4.7	.62	2.38	60.7	.750	19.1	.563	14.3	**1/3** psi **5** psi **10** psi **25** ps	**BN** Nitrile Rubber **EPR** Ethylene Propylene Rubber **KZ** Highly Fluorinated Fluoro-carbon Rubber
4F-CO4L-1-V-SS	1/4" Female NPT	.187	4.7	.62	2.38	60.5	.750	19.1	-	-		
4M-CO4L-1-V-SS	1/4" Male NPT	.187	4.7	.62	2.09	53.1	.750	19.1	-	-		
4V-CO4L-1-V-SS	1/4" VacuSeal	.187	4.7	.62	2.22	56.4	.750	19.1	-	-		
4Z-CO4L-1-V-SS	1/4" CPI™ Compression	.187	4.7	.62	2.39	60.7	.750	19.1	.563	14.3		
M6A-CO4L-1-V-SS	6mm A-LOK® Compression	.187	4.7	.62	2.41	61.2	.750	19.1	.551	14.0		
M6Z-CO4L-1-V-SS	6mm CPI™ Compression	.187	4.7	.62	2.41	61.2	.750	19.1	.551	14.0		
6A-CO6L-1-V-SS	3/8" A-LOK® Compression	.281	7.1	1.70	3.17	80.5	1.00	25.4	.688	17.5		
6F-CO6L-1-V-SS	3/8" Female NPT	.328	8.3	1.85	3.03	77.0	1.00	25.4	-	-		
6M-CO6L-1-V-SS	3/8" Male NPT	.328	8.3	1.85	2.78	70.6	1.00	25.4	-	-		
6Z-CO6L-1-V-SS	3/8" CPI™ Compression	.281	7.1	1.70	3.17	80.5	1.00	25.4	.688	17.5		
6V-CO6L-1-V-SS	3/8" VacuSeal	.328	8.3	1.85	3.57	90.7	1.00	25.4	-	-		
M8A-CO6L-1-V-SS	8mm A-LOK® Compression	.250	6.4	1.60	3.15	80.0	1.00	25.4	.630	16.0		
M8Z-CO6L-1-V-SS	8mm CPI™ Compression	.250	6.4	1.60	3.15	80.0	1.00	25.4	.630	16.0		
8A-CO8L-1-V-SS	1/2" A-LOK® Compression	.406	10.3	2.65	3.37	85.6	1.25	31.8	.875	22.2		
8F-CO8L-1-V-SS	1/2" Female NPT	.406	10.3	2.65	3.60	91.4	1.25	31.8	-	-		
8M-CO8L-1-V-SS	1/2" Male NPT	.406	10.3	2.65	3.16	80.3	1.25	31.8	-	-		
8V-CO8L-1-V-SS	1/2" VacuSeal	.406	10.3	2.65	3.56	90.4	1.25	31.8	-	-		
8Z-CO8L-1-V-SS	1/2" CPI™ Compression	.406	10.3	2.65	3.37	85.6	1.25	31.8	.875	22.2		
M12A-CO8L-1-V-SS	12mm A-LOK® Compression	.375	9.5	2.55	3.44	87.4	1.25	31.8	.866	22.0		
M12Z-CO8L-1-V-SS	12mm CPI™ Compression	.375	9.5	2.55	3.44	87.4	1.25	31.8	.866	22.0		

† For CPI™ and A-LOK®, dimensions are measured with nuts in the finger tight position.

Parker Hannifin Corporation
Instrumentation Products Division
Jacksonville, AL USA
http://www.parker.com/ipdus

How to Order

The part number sequence identifies product characteristics as shown in the example below.

Example: 4M-CO4L-1-V-SS Describes a CO Series Check Valve with 1/4" male NPT inlet and outlet on a 1/4" in line body, 1 psig cracking pressure, fluorocarbon rubber seals, and stainless steel body construction.

4M	–	CO4L	–	1	–	V	–	SS
Connection Size & Type		Body Size		Crack Pressure		Seat/Seal Material		Body Material

Oxygen Cleaning – Add the suffix **-C3** to the end of the part number to receive valves cleaned in accordance with ASTM G93 level C, class 500. This ASTM details cleaning methods and cleanliness levels for materials and equipment used in oxygen-enriched environments. **Example: 4M-CO4L-1-V-SS-C3**

Parker Hannifin Corporation
Instrumentation Products Division
Jacksonville, AL USA
http://www.parker.com/ipdus

LC Series Lift Check Valves

Introduction

Parker's LC-Series Lift Check Valve has been designed for a wide variety of temperature extremes found in power, chemical, petrochemical, oil & gas, and laboratory applications. The LC-Series, ideal for liquid service, has been designed to prevent flow in the reverse direction to within 99.9% of forward flow. The gravity assisted poppet uses back pressure to achieve a seal.

Features

- Wide temperature range
- Variety of end connections available
- Compact design
- Rugged, forged body construction
- Stainless steel construction

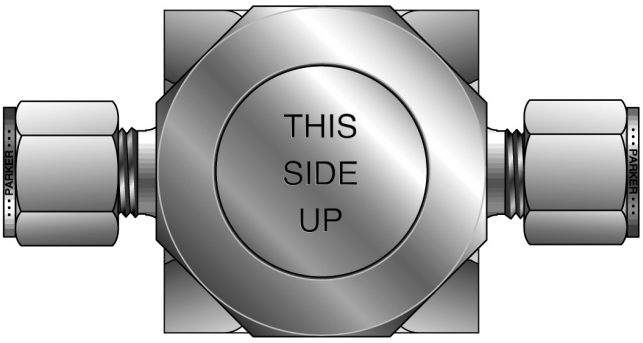

Note: Valve must be mounted in proper orientation.

Specifications

Pressure Rating

.....6000 psig (414 bar) CWP

Temperature Rating

..... -100°F to 900°F (-148°C to 482°C)

Flow Data:

LC6 Series..... C_V = .63 X_T = .47
LC12 Series..... C_V = 1.20 X_T = .63
LC16 Series..... C_V = 2.29 X_T = .65

Dimensions

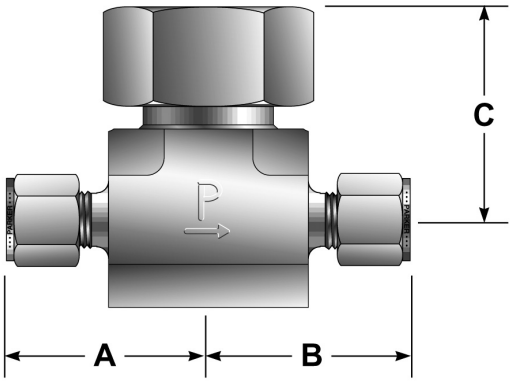

Dimensions in inches (millimeters) are for reference only, subject to change.

Part #	Size/Connection	A	B	C	Bonnet Hex
2F-LC6L-SS	1/8" Female NPT	1.00 (25.4)	1.00 (25.4)	1.34 (34.0)	15/16 (23.8)
4Z-LC6L-SS	1/4" CPI™	1.38 (35.1)	1.38 (35.1)	1.34 (34.0)	15/16 (23.8)
4A-LC6L-SS	1/4" A-LOK®	1.38 (35.1)	1.38 (35.1)	1.34 (34.0)	15/16 (23.8)
4F-LC6L-SS	1/4" Female NPT	1.03 (26.2)	1.03 (26.2)	1.34 (34.0)	15/16 (23.8)
M6A-LC6L-SS	6mm A-LOK®	1.38 (35.1)	1.38 (35.1)	1.34 (34.0)	15/16 (23.8)
4F-LC12L-SS	1/4" Female NPT	1.13 (28.7)	1.13 (28.7)	1.50 (38.1)	1-1/4 (31.8)
6Z-LC12L-SS	3/8" CPI™	1.60 (40.6)	1.60 (40.6)	1.50 (38.1)	1-1/4 (31.8)
6A-LC12L-SS	3/8" A-LOK®	1.60 (40.6)	1.60 (40.6)	1.50 (38.1)	1-1/4 (31.8)
8F-LC16L-SS	1/2" Female NPT	1.56 (39.6)	1.56 (39.6)	1.86 (47.2)	1-1/2 (38.1)
8Z-LC16L-SS	1/2" CPI™	1.97 (50.0)	1.97 (50.0)	1.86 (47.2)	1-1/2 (38.1)
8A-LC16L-SS	1/2" A-LOK®	1.97 (50.0)	1.97 (50.0)	1.86 (47.2)	1-1/2 (38.1)

For CPI™ A-LOK®, dimensions are measured with nuts in the finger-tight position.
Metric dimensions are noted by ().

Materials

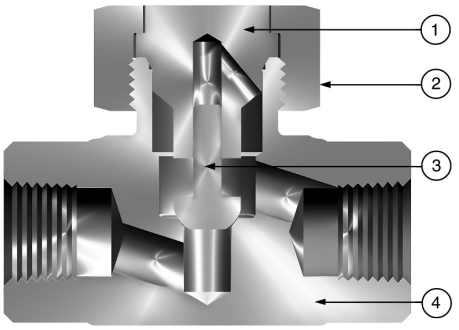

Item #	Part	Stainless Valve
1	Poppet Guide	ASTM A479, Type 316
2	Bonnet Nut	ASTM A479, Type 316
3	Poppet	ASTM A564, Type 630
4	Valve Body	ASTM A182, Type F316

LC16 Series utilizes a nickel-chromium-iron alloy bonnet seal.

Parker Hannifin Corporation
Instrumentation Products Division
Jacksonville, AL USA
http://www.parker.com/ipdus

Notes

Parker Hannifin Corporation
Instrumentation Products Division
Jacksonville, AL USA
http://www.parker.com/ipdus

Introduction

Parker F Series Inline Filters are designed for protection of instrumentation systems from undesirable materials. Component changes or repair and maintenance can admit dirt, chips, scale, or other contaminants to the small bore tubing.

Features

- Compact inline design with large filtration area
- Stainless steel and brass construction
- Replaceable sintered 316 stainless steel filter element
- Standard sintered metal micron ratings: 1, 5, 10, 50, and 100
- Optional 250 and 450 micron wire cloth filter elements
- Port connections include male and female NPT, CPI™, A-LOK®, VacuSeal, and BSP
- Heat code traceability

F

Specifications

Pressure Rating:

316 SS
- 1/8" to 3/4" .....6000 psig (414 bar) CWP
- 1".....5000 psig (345 bar) CWP

All sizes with PTFE Seals .....4000 psig (276 bar) CWP

Brass - 1/8" to 1".....3000 psig (207 bar) CWP

Temperature Rating:

Fluorocarbon Rubber...-15°F to +400°F (-26°C to +204°C)

Nitrile Rubber.....-30°F to +275°F (-34°C to +135°C)

Ethylene Propylene Rubber .....-70°F to +275°F (-57°C to +135°C)

Neoprene Rubber.....-45°F to +250°F (-43°C to +121°C)

PTFE .....-65°F to +400°F (-54°C to +204°C)

Highly Fluorinated Fluorocarbon Rubber .....-15°F to +200°F (-26°C to +93°C)

Materials of Construction

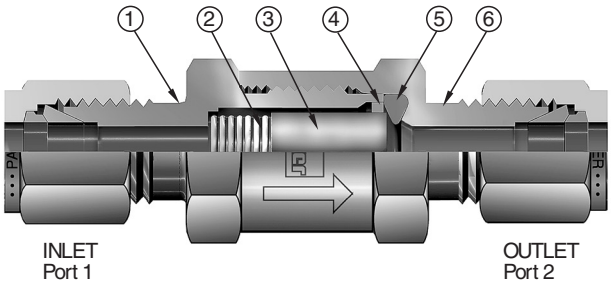

Model shown: 4A-F4L-50-SS

Note: Flow direction reversed with wire mesh elements.

Materials of Construction

Item #	Part	Stainless Steel Filter	Brass Filter
1	Body	ASTM A276, Type 316	ASTM B16, Alloy C36000
2	Spring	316 Stainless Steel	
3	Filter Element	316 Stainless Steel	
4	Guide Ring	PTFE	
5	Seal*	Fluorocarbon Rubber*	
6	Cap	ASTM A276, Type 316	ASTM B16, Alloy C36000

*Optional seal materials are available.
Lubrication: Perfluorinated Polyether.

Parker Hannifin Corporation
Instrumentation Products Division
Jacksonville, AL USA
http://www.parker.com/ipdus

Flow Calculations with 100 psig (7 bar) Inlet Pressure

Pressure Drop Δ	F2L		F4L		F6L		F8L		F12L		F16L	
	Water gpm at 60°F (16°C)	Air SCFM at 60°F (16°C)	Water gpm at 60°F (16°C)	Air SCFM at 60°F (16°C)	Water gpm at 60°F (16°C)	Air SCFM at 60°F (16°C)	Water gpm at 60°F (16°C)	Air SCFM at 60°F (16°C)	Water gpm at 60°F (16°C)	Air SCFM at 60°F (16°C)	Water gpm at 60°F (16°C)	Air SCFM at 60°F (16°C)
	1 Micron		**1 Micron**		**1 Micron**		**1 Micron**		**1 Micron**		**1 Micron**	
5	0.04	0.38	0.13	1.34	0.13	1.38	0.56	5.91	0.66	6.90	0.91	9.52
10	0.05	0.52	0.18	1.86	0.19	1.93	0.80	8.24	0.93	9.61	1.28	13.27
50	0.11	1.03	0.40	3.67	0.42	3.80	1.78	16.21	2.08	18.92	2.87	26.12
	5 Micron		**5 Micron**		**5 Micron**		**5 Micron**		**5 Micron**		**5 Micron**	
5	0.06	0.61	0.26	2.74	0.31	3.26	0.92	9.69	1.81	18.96	1.88	19.75
10	0.08	0.85	0.37	3.82	0.44	4.54	1.31	13.50	2.56	26.41	2.66	27.52
50	0.18	1.67	0.83	7.53	0.98	8.94	2.92	26.57	5.71	51.99	5.95	54.18
	10 Micron		**10 Micron**		**10 Micron**		**10 Micron**		**10 Micron**		**10 Micron**	
5	0.25	2.63	0.38	4.01	0.45	4.74	1.68	17.67	2.33	24.45	3.04	31.88
10	0.35	3.66	0.54	5.59	0.64	6.60	2.38	24.61	3.30	34.06	4.30	44.42
50	0.79	7.21	1.21	11.00	1.43	13.00	5.32	48.45	7.37	67.05	9.61	87.44
	50 Micron		**50 Micron**		**50 Micron**		**50 Micron**		**50 Micron**		**50 Micron**	
5	0.37	3.92	0.76	7.95	1.80	18.89	3.67	38.52	5.23	54.87	7.64	80.16
10	0.53	5.46	1.07	11.08	2.55	26.31	5.19	53.67	7.40	76.46	10.81	111.70
50	1.18	10.75	2.40	21.81	5.69	51.80	11.61	105.65	16.54	150.50	24.16	219.86
	100 Micron		**100 Micron**		**100 Micron**		**100 Micron**		**100 Micron**		**100 Micron**	
5	0.51	5.37	1.33	13.94	2.74	28.72	5.13	53.77	7.95	83.42	8.38	87.88
10	0.72	7.49	1.88	19.42	3.87	40.01	7.25	74.92	11.25	116.24	11.85	122.45
50	1.62	14.73	4.20	38.22	8.65	78.76	16.21	147.48	25.14	228.81	26.49	241.03
	250 Micron		**250 Micron**		**250 Micron**		**250 Micron**		**250 Micron**		**250 Micron**	
5	0.58	6.03	1.77	18.46	5.41	56.57	8.95	93.50	14.28	149.18	19.14	200.01
10	0.82	8.37	2.50	25.62	7.66	78.51	12.65	129.75	20.19	207.02	27.07	277.56
50	1.82	15.85	5.59	48.53	17.12	148.74	28.29	245.81	45.14	392.21	60.52	525.83
	450 Micron		**450 Micron**		**450 Micron**		**450 Micron**		**450 Micron**		**450 Micron**	
5	0.78	8.08	1.82	18.92	7.02	73.18	9.05	94.28	15.36	160.03	19.81	206.39
10	1.10	11.18	2.57	26.17	9.93	101.23	12.80	130.43	21.72	221.38	28.01	285.51
50	2.45	20.54	5.74	48.07	22.21	185.94	28.62	239.57	48.57	406.62	62.64	524.43

Flow / Filter Data

Filter Series	Effective Filtration Area		C_V*						
			1 Micron	5 Micron	10 Micron	50 Micron	100 Micron	250 Micron	450 Micron
	sq in	sq mm	Micron Range .5 to 3	Micron Range 5 to 10	Micron Range 10 to 20	Micron Range 40 to 50	Micron Range 100 to 150	Micron Range 225 to 275	Micron Range 400 to 500
F2L	0.39	252	0.016	0.026	0.112	0.167	0.229	0.258	0.347
F4L	0.70	452	0.057	0.117	0.171	0.339	0.594	0.790	0.812
F6L	1.57	1013	0.059	0.139	0.202	0.805	1.224	2.421	3.141
F8L	2.53	1632	0.252	0.413	0.753	1.642	2.292	4.001	4.047
F12L	3.77	2432	0.294	0.808	1.042	2.339	3.556	6.384	6.869
F16L	4.47	2884	0.406	0.842	1.359	3.417	3.746	8.559	8.859

* Tested in accordance with ISA S75.02. Gas flow will be choked when $P_1 - P_2 / P_1 = x_T$.
X_T =1.0 for micron sizes 1 through 100; 0.79 for the 250 micron size, and 0.68 for the 450 micron size.

Maximum Pressure Differential Across Clean Filters at 70°F (21°C)

	1 micron	5 micron	10 micron	50 micron	100 micron	250 micron	450 micron
psig	2250	1950	1750	1150	1000	1000	1000
bar	155	134	120	79	69	69	69

Parker Hannifin Corporation
Instrumentation Products Division
Jacksonville, AL USA
http://www.parker.com/ipdus

Pressure vs. Temperature

Nitrile Seat

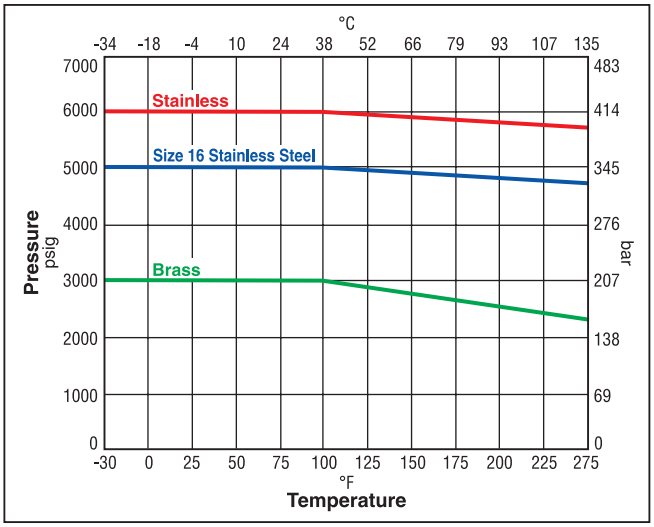

Neoprene Seat

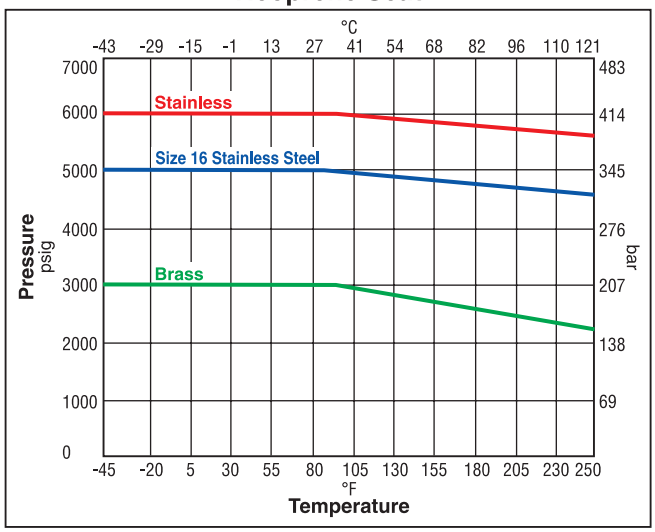

Ethylene Propylene Seat

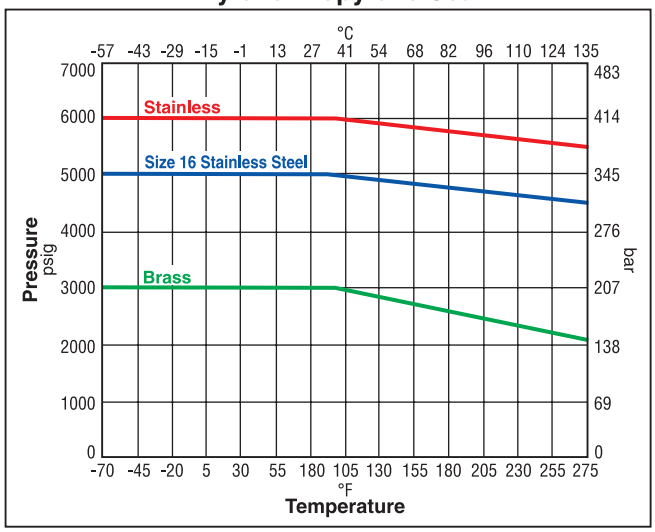

FluorocarbonSeat

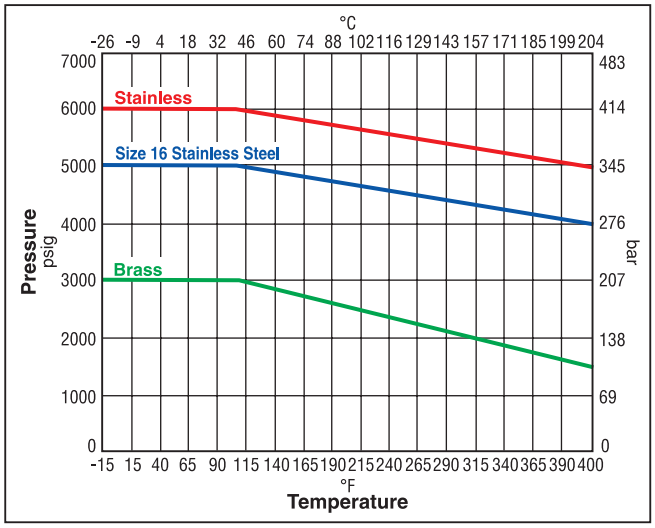

Note: To determine MPa, multiply bar by 0.1

Parker Hannifin Corporation
Instrumentation Products Division
Jacksonville, AL USA
http://www.parker.com/ipdus

Dimensions

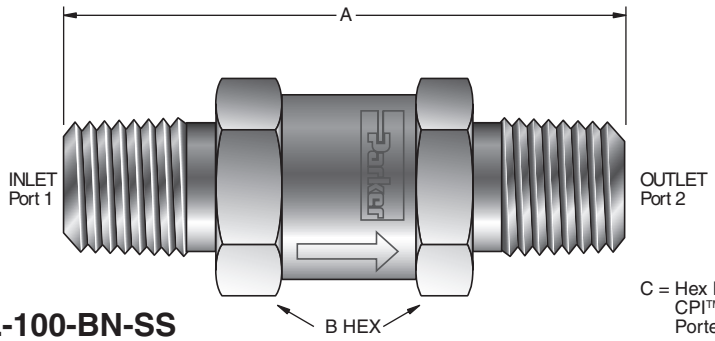

C = Hex Diameter of Nuts on CPI™ and A-LOK® Compression Ported Valves

Model shown: 4M-F4L-100-BN-SS

Dimensions in inches (millimeters) are for reference only, subject to change.

Basic Part Number	End Connections	Dimensions						Options		
		A†		B		C		Micron Rating	Seal Material	Body Material
	Inlet & Outlet Port	inch	mm	inch	mm	inch	mm			
2A-F2L-10-SS	1/8" A-LOK® Compression	2.29	58.2	.625	15.9	.438	11.1	**1** micron	**BN** Nitrile Rubber	**B** Brass
2F-F2L-10-SS	1/8" Female NPT	1.86	47.2	.625	15.9	–	–	**5** micron		
2KF-F2L-10-SS	1/8" Female BSP/ISO Tapered	1.86	47.2	.625	15.9	–	–	**50** micron	**EPR** Ethylene Propylene Rubber	
2KM-F2L-10-SS	1/8" Male BSP/ISO Tapered	1.77	45.0	.625	15.9	–	–	**100** micron		
2M-F2L-10-SS	1/8" Male NPT	1.77	45.0	.625	15.9	–	–	**250** micron		
2Z-F2L-10-SS	1/8" CPI™ Compression	2.29	58.2	.625	15.9	.438	11.1	**450** micron		
M3A-F2L-10-SS	3mm A-LOK® Compression	2.30	58.4	.625	15.9	.472	12.0			
M3Z-F2L-10-SS	3mm CPI™ Compression	2.30	58.4	.625	15.9	.472	12.0		**NE** Neoprene Rubber	
4A-F4L-10-SS	1/4" A-LOK® Compression	2.42	61.5	.750	19.1	.563	14.3			
4F-F4L-10-SS	1/4" Female NPT	2.40	61.0	.750	19.1	–	–			
4KF-F4L-10-SS	1/4" Female BSP/ISO Tapered	2.40	61.0	.750	19.1	–	–			
4KM-F4L-10-SS	1/4" Male BSP/ISO Tapered	2.18	55.4	.750	19.1	–	–		**T**** PTFE	
4M-F4L-10-SS	1/4" Male NPT	2.18	55.4	.750	19.1	–	–			
4V-F4L-10-SS	1/4" VacuSeal	2.22	56.4	.750	19.1	–	–		**KZ** Highly Fluorinated Fluorocarbon Rubber	
4TA-F4L-10-SS	1/4" Tube Adapter	2.35	59.7	.750	19.1	–	–			
4Z-F4L-10-SS	1/4" CPI™ Compression	2.42	61.5	.750	19.1	.563	14.3			
M6A-F4L-10-SS	6mm A-LOK® Compression	2.43	61.7	.750	19.1	.551	14.0			
M6Z-F4L-10-SS	6mm CPI™ Compression	2.43	61.7	.750	19.1	.551	14.0			
6A-F6L-10-SS	3/8" A-LOK® Compression	3.27	83.1	1.000	25.4	.688	17.5			
6F-F6L-10-SS	3/8" Female NPT	3.03	77.0	1.000	25.4	–	–			
6KF-F6L-10-SS	3/8" Female BSP/ISO Tapered	3.03	77.0	1.000	25.4	–	–		** Only available with stainless steel filters.	
6KM-F6L-10-SS	3/8" Male BSP/ISO Tapered	2.96	75.2	1.000	25.4	–	–			
6M-F6L-10-SS	3/8" Male NPT	2.96	75.2	1.000	25.4	–	–			
6V-F6L-10-SS	3/8" VacuSeal	3.56	90.4	1.000	25.4	–	–			
6Z-F6L-10-SS	3/8" CPI™ Compression	3.27	83.1	1.000	25.4	.688	17.5			
8A-F8L-10-SS	1/2" A-LOK® Compression	4.08	103.6	1.250	31.8	.875	22.2			
8F-F8L-10-SS	1/2" Female NPT	3.56	90.4	1.250	31.8	–	–			
8KF-F8L-10-SS	1/2" Female BSP/ISO Tapered	3.56	90.4	1.250	31.8	–	–			
8KM-F8L-10-SS	1/2" Male BSP/ISO Tapered	3.56	90.4	1.250	31.8	–	–			
8M-F8L-10-SS	1/2" Male NPT	3.56	90.4	1.250	31.8	–	–			
8V-F8L-10-SS	1/2" VacuSeal	3.56	90.4	1.250	31.8	–	–			
8Z-F8L-10-SS	1/2" CPI™ Compression	4.08	103.6	1.250	31.8	.875	22.2			
M12A-F8L-10-SS	12mm A-LOK® Compression	4.06	103.1	1.250	31.8	.866	22.0			
M12Z-F8L-10-SS	12mm CPI™ Compression	4.06	103.1	1.250	31.8	.866	22.0			
12A-F12L-10-SS	3/4" A-LOK® Compression	4.34	110.2	1.375	34.9	1.125	28.6			
12F-F12L-10-SS	3/4" Female NPT	4.09	103.9	1.375	34.9	–	–			
12KF-F12L-10-SS	3/4" Female BSP/ISO Tapered	4.09	103.9	1.375	34.9	–	–			
12KM-F12L-10-SS	3/4" Male BSP/ISO Tapered	4.09	103.9	1.375	34.9	–	–			
12M-F12L-10-SS	3/4" Male NPT	4.09	103.9	1.375	34.9	–	–			
12V-F12L-10-SS	3/4" VacuSeal	4.64	117.9	1.375	34.9	–	–			
12Z-F12L-10-SS	3/4" CPI™ Compression	4.34	110.2	1.375	34.9	1.125	28.6			
M20A-F12L-10-SS	20mm A-LOK® Compression	4.32	109.7	1.375	34.9	1.260	32.0			
16A-F16L-10-SS	1" A-LOK® Compression	4.63	117.6	1.625	41.3	1.500	38.1			
16F-F16L-10-SS	1" Female NPT	4.84	122.9	1.625	41.3	–	–			
16KF-F16L-10-SS	1" Female BSP/ISO Tapered	4.84	122.9	1.625	41.3	–	–			
16KM-F16L-10-SS	1" Male BSP/ISO Tapered	4.52	114.8	1.625	41.3	–	–			
16M-F16L-10-SS	1" Male NPT	4.52	114.8	1.625	41.3	–	–			
16Z-F16L-10-SS	1" CPI™ Compression	4.63	117.6	1.625	41.3	1.500	38.1			
M25A-F16L-10-SS	25mm A-LOK® Compression	4.74	120.4	1.625	41.3	1.496	38.0			
M25Z-F16L-10-SS	25mm CPI™ Compression	4.74	120.4	1.625	41.3	1.496	38.0			

Note: Optional wire cloth filter elements may slightly alter dimensions A and B on filters with combination end connections.
†For CPI™ and A-Lok®: Dimensions are measured with nuts in the finger tight position.

Parker Hannifin Corporation
Instrumentation Products Division
Jacksonville, AL USA
http://www.parker.com/ipdus

How to Order

The part number sequence identifies product characteristics as shown in the example below.

Example: 4M-F4L-5-BN-B Describes a F Series Inline Filter with 1/4" male NPT inlet and outlet on a 1/4" in line body, 5 micron element, Nitrile seals and Brass body construction.

4M	–	F4L	–	5	–	BN	–	B
Connection Size & Type		Body Size		Micron Rating		Seal Material		Body Material

Oxygen Cleaning – Add the suffix **-C3** to the end of the part number to receive valves cleaned in accordance with ASTM G93 level C, class 500. This ASTM details cleaning methods and cleanliness levels for materials and equipment used in oxygen-enriched environments. **Example: 4M-F4L-5-BN-B-C3**

Kit Information

To order repair kits for the F Series Inline Filters simply fill in the designators from the chart below.

Size	Micron Rating	Seat Material	
F2	**1** micron	**V**	Fluorocarbon Rubber
F4	**5** micron	**BN**	Nitrile Rubber
F6	**10** micron	**EPR**	Ethylene Propylene Rubber
F8	**50** micron		
F12	**100** micron	**NE**	Neoprene Rubber
F16	**250** micron	**T**	PTFE
	450 micron	**KZ**	Highly Fluorinated Fluorocarbon

Examples: KIT-F8-10-V, KIT-F16-100-BN

Filter Kits Contain: Molded Seal, Filter Element, Guide Ring, Spring and Maintenance Instructions

Caution: When interchanging sintered metal elements with wire cloth filter elements, the flow direction is reversed.

Parker Hannifin Corporation
Instrumentation Products Division
Jacksonville, AL USA
http://www.parker.com/ipdus

Notes

Parker Hannifin Corporation
Instrumentation Products Division
Jacksonville, AL USA
http://www.parker.com/ipdus

FT Series Tee Filters

Introduction

Parker FT Series Tee Filters are designed for protection of instrumentation systems from undesirable materials. Component changes or repair and maintenance can admit dirt, chips, or other contaminants to the small bore tubing.

Features

- Filter element replacement achievable without removing filter from installation
- Compact, high strength forged body design with effective filtration areas of:
  FT4 – 1.57 sq in (1013 sq mm)
  FT8 – 2.53 sq in (1632 sq mm)
- Stainless steel and brass construction
- Standard sintered metal micron ratings: 1, 5, 10, 50, and 100
- Optional 250 and 450 micron wire cloth filter elements
- Optional bypass enables a continuous self cleaning flow around the element
- Port connections include male and female NPT, CPI™, A-LOK®, and VacuSeal

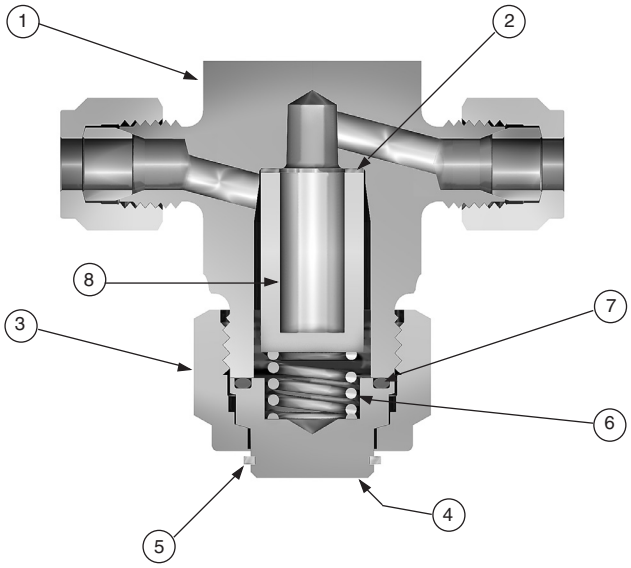

Model Shown: 4Z-FT4-10-BN-SS

Specifications

- **Pressure Ratings:**
  With Elastomeric and Metallic Seals:
  Stainless Steel .....6000 psig (414 bar) CWP
  Brass.....2000 psig (138 bar) CWP
  With PTFE Seals:
  Stainless Steel .....4000 psig (276 bar) CWP
  Brass.....2000 psig (138 bar) CWP

Pressure Rating and Tubing Selection:

For working pressures of A-LOK® and CPI™ tube connections, please see the Instrument Tubing Selection Guide (Bulletin 4200-TS), found in the Technical Section of the Parker Instrumentation Process Control Binder, or the Parker Instrument Tube Fitting Installation Manual (Bulletin 4200-B4).

For working pressures of valves with external or internal pipe threads, please see Catalog 4260, Instrumentation Pipe Fittings.

Definitions

Filter Element – The component within the filter which captures media contamination.

Filtration Area – The surface area of the filter element available to capture contamination.

Micron – A unit of measure used to indicate the mean pore diameter of the filter element or the mean particle diameter of media contamination.

One micron = 0.00004 inch or 0.0010 mm

Materials of Construction

Item #	Part	Stainless Steel Filter	Brass Filter
1	Body	ASTM A182, Type F316	ASTM B283, Alloy C37700
2	Washer	316 Stainless Steel	
3	Nut	ASTM A479, Type 316	ASTM B16, Alloy C36000
4	Cap	ASTM A479, Type 316	ASTM B16, Alloy C36000
5	Retainer Ring	PH 15-7 Mo Stainless Steel	
6	Spring	316 Stainless Steel	
7	Seal	Fluorocarbon Rubber	
8	Element	316 Stainless Steel	

* Optional seal materials are available. See How to Order section.
Lubrication: Perfluorinated Polyether.

Installation

Best installation practice is to orient the cap downward. This helps to prevent contaminants from entering the system during element change.

Parker Hannifin Corporation
Instrumentation Products Division
Jacksonville, AL USA
http://www.parker.com/ipdus

Pressure vs. Temperature

Nitrile Seat

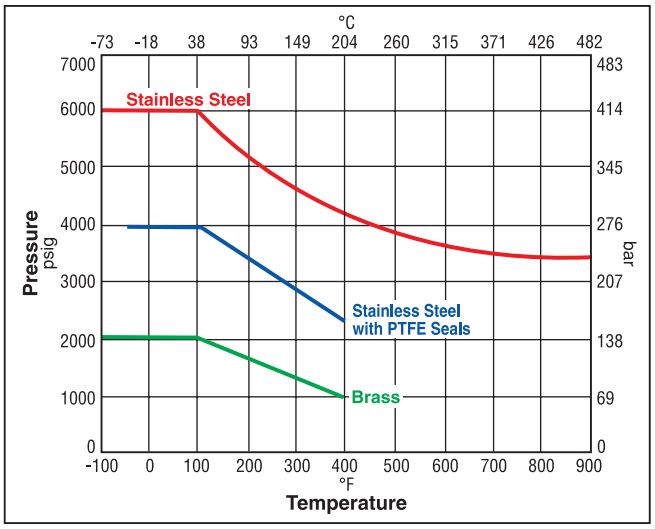

Note: To determine MPa, multiply bar by 0.1

Note: This Pressure versus Temperature chart reflects the maximum temperature range of indicated body materials.

The temperature rating of the seal becomes the limiting factor on temperature range.

Temperature Ratings:

Nitrile Rubber..... -40°F to 275°F (-40°C to 135°C)
Highly Fluorinated Fluorocarbon Rubber
..... -20°F to 500°F (-29°C to 260°C)
Ethylene Propylene Rubber
..... -70°F to 300°F (-57°C to 149°C)
Fluorocarbon Rubber..... -40°F to 400°F (-40°C to 204°C)
Neoprene Rubber..... -65°F to 300°F (-54°C to 149°C)
Silver Plated Nickel Alloy Gasket (C-ring)
..... -100°F to 900°F (-73°C to 482°C)
PTFE ..... -70°F to 400°F (-56°C to 204°C)

FT

Flow Calculations with 100 psig (7 bar) Inlet Pressure

Pressure Drop		FT4				FT8			
ΔP psig	ΔP bar	Water gpm at 60°F (16°C)	Water m³/hr at 60°F (16°C)	Air SCFM at 60°F (16°C)	Air m³/hr at 60°F (16°C)	Water gpm at 60°F (16°C)	Water m³/hr at 60°F (16°C)	Air SCFM at 60°F (16°C)	Air m³/hr at 60°F (16°C)
		1 Micron				**1 Micron**			
5	0.35	0.16	0.04	1.69	2.68	0.28	0.06	2.89	4.58
10	0.69	0.23	0.05	2.35	3.72	0.39	0.09	4.02	6.36
50	3.45	0.51	0.12	4.63	7.18	0.87	0.20	7.91	12.26
		5 Micron				**5 Micron**			
5	0.35	0.35	0.08	3.68	5.84	0.77	0.17	8.05	12.76
10	0.69	0.50	0.11	5.13	8.12	1.08	0.25	11.21	17.74
50	3.45	1.11	0.25	10.10	15.65	2.43	0.55	22.07	34.19
		10 Micron				**10 Micron**			
5	0.35	0.44	0.10	4.57	7.26	0.94	0.21	9.90	15.70
10	0.69	0.62	0.14	6.37	10.09	1.33	0.30	13.79	21.83
50	3.45	1.38	0.31	12.55	19.44	2.98	0.68	27.15	42.07
		50 Micron				**50 Micron**			
5	0.35	0.52	0.12	5.42	8.59	0.99	0.23	10.42	16.52
10	0.69	0.73	0.17	7.55	11.95	1.40	0.32	14.51	22.97
50	3.45	1.63	0.37	14.86	23.03	3.14	0.71	28.57	44.26
		100 Micron				**100 Micron**			
5	0.35	0.65	0.15	6.78	10.75	1.64	0.37	17.22	27.31
10	0.69	0.91	0.21	9.45	14.95	2.32	0.53	23.99	37.97
50	3.45	2.04	0.46	18.60	28.81	5.19	1.18	47.23	73.17
		250 Micron				**250 Micron**			
5	0.35	1.14	0.26	11.94	18.92	1.74	0.40	18.22	28.88
10	0.69	1.62	0.37	16.56	26.17	2.47	0.56	25.28	39.95
50	3.45	3.61	0.82	31.30	48.07	5.52	1.25	47.78	73.37
		450 Micron				**450 Micron**			
5	0.35	1.23	0.28	12.84	20.35	1.88	0.43	19.64	31.13
10	0.69	1.74	0.39	17.82	28.17	2.66	0.60	27.27	43.10
50	3.45	3.88	0.88	33.92	52.16	5.94	1.35	51.89	79.81

Flow / Filter Data

Filter Series	Effective Filtration Area		C_V*						
			1 Micron	5 Micron	10 Micron	50 Micron	100 Micron	250 Micron	450 Micron
	sq in	sq mm	Micron Range .5 to 3	Micron Range 5 to 10	Micron Range 10 to 20	Micron Range 40 to 50	Micron Range 100 to 150	Micron Range 225 to 275	Micron Range 400 to 500
FT4	1.57	1012	0.072	0.157	0.195	0.231	0.289	0.511	0.549
FT8	2.53	1632	0.123	0.343	0.422	0.444	0.734	0.780	0.840

* Tested in accordance with ISA S75.02. Gas flow will be choked when $P_1 - P_2 / P_1 = x_T$.
X_T =1.0 for micron sizes 1 through 100; 0.78 for the 250 micron size, and 0.81 for the 450 micron size.

Parker Hannifin Corporation
Instrumentation Products Division
Jacksonville, AL USA
http://www.parker.com/ipdus

Dimensions

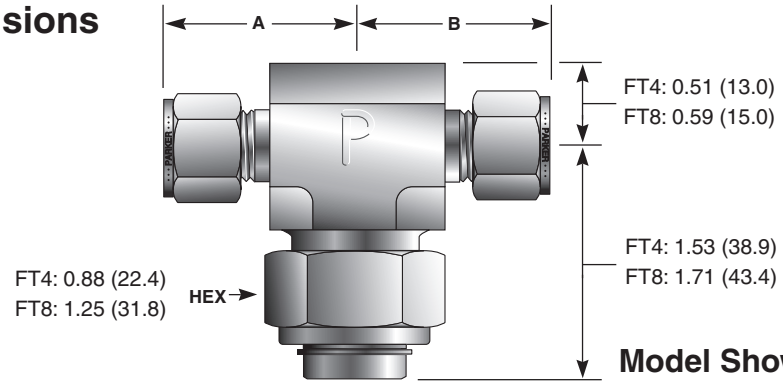

Model Shown: 4Z-FT4-10-BN-SS

Dimensions in inches (millimeters) are for reference only, subject to change.

Basic Part Number	End Connections	Dimensions Inches (mm)	Options			
	Port 1 and Port 2	A† and B	Micron Rating	Seal Material		Body Material
2A-FT4-10-SS	1/8" A-LOK®	1.14 (29.0)	**1** micron **5** micron **50** micron **100** micron **250** micron **450** micron	**BN**	Nitrile Rubber	**B** Brass
2Z-FT4-10-SS	1/8" CPI™					
2F-FT4-10-SS	1/8" Female NPT	1.00 (25.4)		**EPR**	Ethylene Propylene Rubber	
2M-FT4-10-SS	1/8" Male NPT	1.00 (25.4)		**NE**	Neoprene Rubber	
4A-FT4-10-SS	1/4" A-LOK®	1.23 (31.2)		**KZ**	Highly Fluorinated Fluorocarbon Rubber	
4Z-FT4-10-SS	1/4" CPI™					
4F-FT4-10-SS	1/4" Female NPT	1.06 (26.9)		**HT**	Silver Plated Nickel Alloy C-Ring	
4M-FT4-10-SS	1/4" Male NPT	1.09 (27.7)				
4V-FT4-10-SS	1/4" VacuSeal	1.20 (30.5)		**T**	PTFE	
M6A-FT4-10-SS	6mm A-LOK®	1.23 (31.2)				
M6Z-FT4-10-SS	6mm CPI™					
6A-FT8-10-SS	3/8" A-LOK®	1.42 (36.1)				
6Z-FT8-10-SS	3/8" CPI™					
6M-FT8-10-SS	3/8" Male NPT	1.19 (30.2)				
8A-FT8-10-SS	1/2" A-LOK®	1.53 (38.9)				
8Z-FT8-10-SS	1/2" CPI™					
8F-FT8-10-SS	1/2" Female NPT	1.48 (37.6)				
8M-FT8-10-SS	1/2" Male NPT	1.38 (35.1)				
8V-FT8-10-SS	1/2" VacuSeal	1.33 (33.8)				
M8A-FT8-10-SS	8mm A-LOK®	1.44 (36.6)				
M8Z-FT8-10-SS	8mm CPI™					
M10A-FT8-10-SS	10mm A-LOK®	1.44 (36.6)				
M10Z-FT8-10-SS	10mm CPI™					
M12A-FT8-10-SS	12mm A-LOK®	1.54 (39.1)				
M12Z-FT8-10-SS	12mm CPI™					

†For CPI™ and A-Lok®: Dimensions are measured with nuts in the finger tight position.

Maximum Pressure Differential Across Clean Filters at 70°F (21°C)

	1 micron	5 micron	10 micron	50 micron	100 micron	250 micron	450 micron
psig	2250	1950	1750	1150	1000	1000	1000
bar	155	134	120	79	69	69	69

Parker Hannifin Corporation
Instrumentation Products Division
Jacksonville, AL USA
http://www.parker.com/ipdus

How to Order

The part number sequence identifies product characteristics as shown in the example below.

Example: 4M-FT4-5-BN-B Describes a FT Series Filter with 1/4" male NPT inlet and outlet on a 1/4" in line body, 5 micron element, Nitrile seals and Brass body construction.

4M	–	FT4	–	5	–	BN	–	B
Connection Size & Type		Body Size		Micron Rating		Seal Material		Body Material

Options

Oxygen Cleaning – Add the suffix **-C3** to the end of the part number to receive valves cleaned in accordance with ASTM G93 level C, class 500. This ASTM details cleaning methods and cleanliness levels for materials and equipment used in oxygen-enriched environments. **Example: 4M-FT4-5-BN-B-C3**

Bypass – Add the suffix**–PB** to the end of the part number to receive a 1/8" –27 FNPT tapped Cap for sampling.
Example: 2M-FT4-5-V-SS**-PB**

Integral Compression Ported Bypass Option – Add the suffix **-PBA** (A-LOK®) or **-PBZ** (CPI™) to the end of the part number to receive a 4Z/4A (FT4) or 6A/6Z (FT8) compression ported Cap.
Example: 2M-FT4-5-V-SS**-PBZ**

Kit Information

To order repair kits for the FT Series Filters, simply fill in the designators from the chart below.

Size	Micron Rating	Seal Material	
FT4	**1** micron	**V**	Fluorocarbon Rubber
FT8	**5** micron	**BN**	Nitrile Rubber
	10 micron	**EPR**	Ethylene Propylene Rubber
	50 micron	**NE**	Neoprene Rubber
	100 micron	**KZ**	Highly Fluorinated Fluorocarbon
	250 micron	**HT**	Silver PLated Nickel Alloy C-Ring
	450 micron		

Examples: KIT-FT4-10-V, KIT-FT8-100-BN

Filter Kits Contain: Seals, Filter Element, Spring and Maintenance Instructions.

Caution: When interchanging sintered metal elements with wire cloth filter elements, the flow direction is reversed.

Parker Hannifin Corporation
Instrumentation Products Division
Jacksonville, AL USA
http://www.parker.com/ipdus

RH4 Series Relief Valves

Introduction

Parker RH4 Relief Valves are designed such that when the upstream pressure exceeds the closing force exerted by the spring, the lower stem opens, permitting flow through the valve. Flow through the valve increases proportionately to the increase in upstream pressure.

Features

- Pressure settings are externally adjustable while the valve is in operation. Eight different spring ranges provide greater system sensitivity and enhanced performance.
- Captured molded seat design is blow-out and chip resistant.
- Manual Override option with positive stem retraction is available for pressures up to 1500 psig (103 bar). This option permits the user to relieve upstream pressure while maintaining the predetermined cracking pressure.
- Color coded springs and labels indicate spring cracking range.
- Lock wire feature secures a given pressure setting.

Specifications

Working Pressure:

Up to 6000 psig (414 bar) CWP.

Up to 8000 psig (552 bar) during relief with no internal seal damage.

Cracking Pressure:

Eight springs, from 50 psig to 6000 psig in the following ranges:

50-350 psig (3.4-24.1 bar)	350-750 psig (24.1-51.7 bar)	750-1500 psig (51.7-103.4 bar)
1500-2250 psig (103.4-155.1 bar)	2250-3000 psig (155.1-206.8 bar)	3000-4000 psig (206.8-275.8 bar)
4000-5000 psig (275.8-344.7 bar)	5000-6000 psig (344.7-413.7 bar)	

Temperature Rating:

Nitrile Rubber.....-30°F to +225°F (-34°C to +107°C)

Highly Fluorinated Fluorocarbon Rubber .....-20°F to +200°F (-29°C to +93°C)

Ethylene Propylene Rubber .....-70°F to +275°F (-57°C to +135°C)

Fluorocarbon Rubber ..-10°F to +400°F (-23°C to +204°C)

Neoprene Rubber.....-45°F to +250°F (-43°C to +121°C)

Flow Calculations

Inlet Pressure		Pressure Drop ΔP		Water @ 60°F (16°C)		Air @ 60°F (16°C)	
psig	bar	psig	bar	gpm	m³/hr	SCFM	m³/hr
100	7	1	0.1	0.4	0.1	4.3	7.0
		10	0.7	1.3	0.3	13.2	21.0
		50	3.5	2.9	0.7	24.2	37.3
1000	69	10	0.7	1.3	0.3	40.9	69.0
		100	6.9	4.1	0.9	123.5	208.4
		500	34.5	9.2	2.1	219.1	368.6
3000	207	100	6.9	4.1	0.9	220.1	373.5
		1000	69.0	13.0	2.9	590.8	1002.4
		1500	103.4	15.9	3.6	652.1	1105.7
6000	413	1000	69.0	13.0	2.9	916.8	1556.2
		2000	137.9	18.3	4.2	1179.7	2001.3
		3000	206.8	22.5	5.1	1301.6	2207.0

Crack Pressure vs. Reseal Pressure

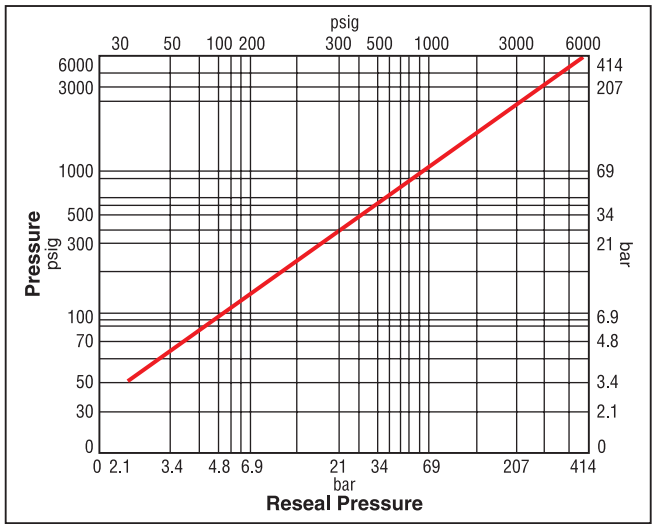

Note: Valves which are not actuated for a period of time may initially crack at higher than set crack pressures.

Note: To determine MPa, multiply bar by 0.1

Parker Hannifin Corporation
Instrumentation Products Division
Jacksonville, AL USA
http://www.parker.com/ipdus

Materials of Construction

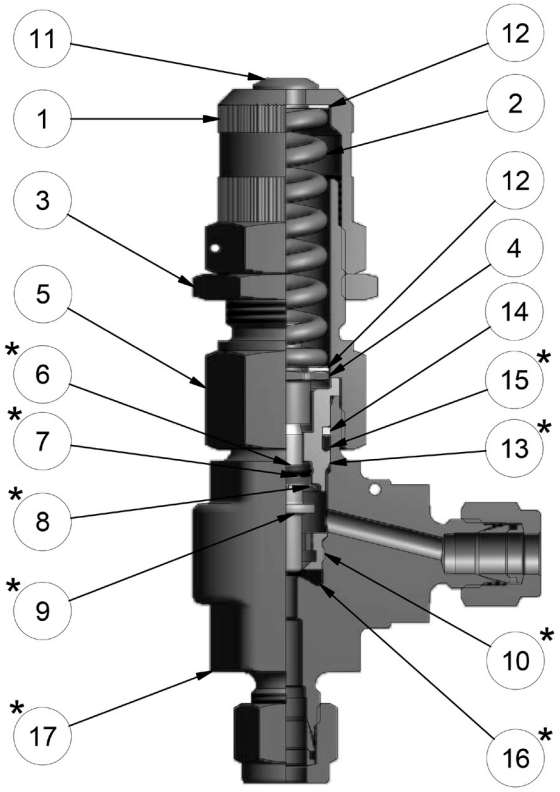

Model Shown: 4A-RH4A-BNT-SS-K1

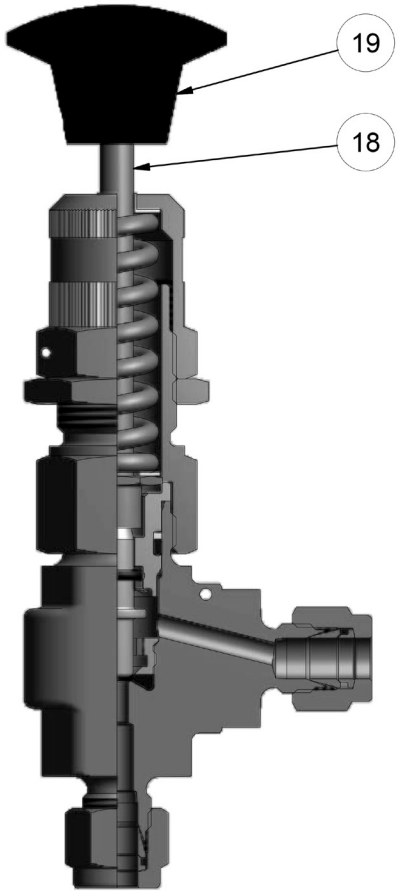

Model Shown: 4A-RH4A-VT-SS-MN-K2

Item #	Part	Material
1	Cap	ASTM A 479, Type 316
2	Spring	17-7 Stainless Steel
3	Locknut	316 Stainless Steel
4	Upper Stem	ASTM A 479, Type 316
5	Bonnet	ASTM A 479, Type 316
*6	Stem Seal	**Fluorocarbon Rubber
*7	Stem Back-up Ring	CTFE
*8	Push On Ring	PH 15-7MO Stainless Steel
*9	Lower Stem	ASTM A 479, Type 316
*10	Seat Retainer	ASTM A 479, Type 316
11	Plug	Zinc Plated Steel
12	Washer	PTFE
*13	Stem Guide	ASTM A 479, Type 316
14	Back-up Ring	PTFE
*15	Body Seal	**Fluorocarbon Rubber
*16	Seat	**Fluorocarbon Rubber
*17	Valve Body	ASTM A 182, Type F316
18	Handle Stem	ASTM A 479, Type 316
19	Handle	Phenolic

* Wetted Parts
** Optional seat and seal materials are located in How to Order section.
Lubrication: Perfluorinated polyether.

Parker Hannifin Corporation
Instrumentation Products Division
Jacksonville, AL USA
http://www.parker.com/ipdus

Dimensions / Flow Data

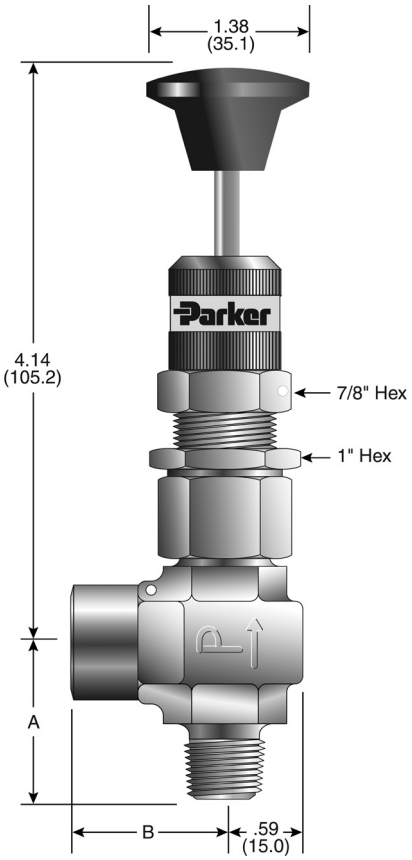

Model Shown:
4M4F-RH4A-VT-SS-MN

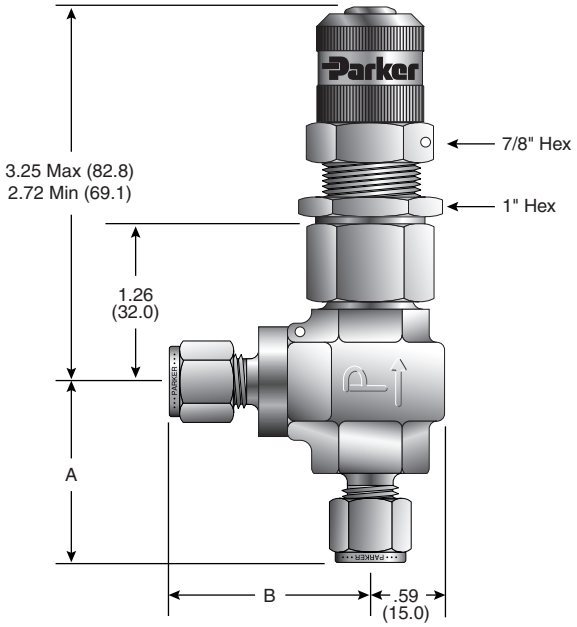

Model Shown:
4A-RH4A-BNT-SS

Dimensions in inches (millimeters) are for reference only, subject to change.

Basic Part Number	End Connections (Inlet) Port 1	Flow Data: Orifice Inch	Orifice mm	C_V	X_T*	Dimensions †: A inch	A mm	B inch	B mm	Options: Seal Material		Actuation	
4A-RH4A-VT-SS	1/4" A-LOK® Compression	0.14	3.6	0.41	0.67	1.44	36.6	1.60	40.6	**BN**	Nitrile Rubber	**MN**	Manual Override
4Z-RH4A-VT-SS	1/4" CPI™ Compression					1.44	36.6	1.60	40.6				
4M4A-RH4A-VT-SS	1/4" Male NPT					1.19	30.2	1.60	40.6	**EPR**	Ethylene Propylene Rubber		
4M4Z-RH4A-VT-SS	1/4" Male NPT					1.19	30.2	1.60	40.6				
4M4F-RH4A-VT-SS	1/4" Male NPT					1.19	30.2	1.17	29.7				
4KF-RH4A-VT-SS	1/4" Female BSP/ISO Tapered					1.19	30.2	1.17	29.7	**NE**	Neoprene Rubber		
4KM-RH4A-VT-SS	1/4" Male BSP/ISO Tapered					1.19	30.2	1.17	29.7				
M6A-RH4A-VT-SS	6mm A-LOK® Compression					1.44	36.6	1.60	40.6	**KZ**	Highly Fluorinated Fluorocarbon Rubber		
M6Z-RH4A-VT-SS	6mm CPI™ Compression					1.44	36.6	1.60	40.6				
M8A-RH4A-VT-SS	8mm A-LOK® Compression					1.44	36.6	1.60	40.6				
M8Z-RH4A-VT-SS	8mm CPI™ Compression					1.44	36.6	1.60	40.6				

* Tested in accordance with ISA S75.02. Gas flow will be choked when $P_1 - P_2 / P_1 = x_T$.
†For CPI™ and A-LOK®: Dimensions are measured with nuts in the finger tight position.

Parker Hannifin Corporation
Instrumentation Products Division
Jacksonville, AL USA
http://www.parker.com/ipdus

How to Order

The part number sequence identifies product characteristics as shown in the example below.

Example: 4Z-RH4A-BNT-SS-MN Describes an RH4A Series externally adjustable relief valve equipped with 1/4" CPI™ compression inlet and outlet ports on a 1/4" angle pattern body, Nitrile seals, PTFE back-up ring, stainless steel construction and Manual Override.

4Z	-	RH4A	-	BN	T	-	SS	-	MN
Connection Size & Type		Body Size & Pattern		Seal Material	Back-Up Rings**		Body Material		Actuation

Spring Kits

Kit Part Number	Cracking Pressure Range (psig)	Cracking Pressure Range (bar)	Color Code
KIT-RH4SP-50-350	50-350	3.4-24.1	Gray
KIT-RH4SP-350-750	350-750	24.1-51.7	Red
KIT-RH4SP-750-1500	750-1500	51.7-103.4	Orange
KIT-RH4SP-1500-2250	1500-2250	103.4-155.1	Yellow
KIT-RH4SP-2250-3000	2250-3000	155.1-206.8	Light Green
KIT-RH4SP-3000-4000	3000-4000	206.8-275.8	Light Blue
KIT-RH4SP-4000-5000	4000-5000	275.8-344.7	Violet
KIT-RH4SP-5000-6000	5000-6000	344.7-413.7	Lemon Yellow

Spring Kit Contains:

Spring
Coded label
PTFE washers Locking wire / lead seal
Installation Instructions

Seal Kits

Kit Part Number	Kit Part Number (Manual Override Option)	Seat/Seal Material
KIT-RH4-SLEEVE-VT-SS	KIT-RH4-SLEEVE-MN-VT-SS	Fluorocarbon Rubber
KIT-RH4-SLEEVE-BNT-SS	KIT-RH4-SLEEVE-MN-BNT-SS	Nitrile Rubber
KIT-RH4-SLEEVE-EPRT-SS	KIT-RH4-SLEEVE-MN-EPRT-SS	Ethylene Propylene Rubber
KIT-RH4-SLEEVE-NET-SS	KIT-RH4-SLEEVE-MN-NET-SS	Neoprene Rubber
KIT-RH4-SLEEVE-KZT-SS	KIT-RH4-SLEEVE-MN-KZT-SS	Highly Fluorinated Fluorocarbon Rubber

Seal Kit Contains:

Stem Cartridge
Seat
Maintenance Instructions

Parker Hannifin Corporation
Instrumentation Products Division
Jacksonville, AL USA
http://www.parker.com/ipdus

RL4 Series Relief Valves

Introduction

Parker RL4 Relief Valves are designed such that when the upstream pressure exceeds the closing force exerted by the spring, the lower stem opens, permitting flow through the valve. Flow through the valve increases proportionately to the increase in upstream pressure.

Features

- Pressure settings are externally adjustable while the valve is in operation. Seven different spring ranges provide greater system sensitivity and enhanced performance.
- Manual override option with positive stem retraction is available for the full working pressures range. This option permits the user to relieve upstream pressure while maintaining the predetermined cracking pressure.
- Color coded springs and labels indicate spring cracking range.
- Back pressure has minimum effect on cracking pressure.
- Lock wire feature secures a given pressure setting.

Specifications

Working pressure:

Up to 400 psig (28 bar) CWP

Up to 600 psig (41 bar) during relief with no internal seal damage.

Cracking pressure:

Seven springs with the following ranges:

10-25 psig (0.7-1.7 bar)	25-50 psig (1.7-3.4 bar)	50-100 psig (3.4-6.9 bar)
100-150 psig (6.9-10.3 bar)	150-225 psig (10.3-15.5 bar)	225-400 psig (15.5-27.6 bar)
10-225 psig (0.7-15.5 bar)		

Temperature Rating:

Nitrile Rubber..... -30°F to 225°F (-34°C to 107°C)

Highly Fluorinated Fluorocarbon Rubber ..... -20°F to 200°F (-29°C to 93°C)

Ethylene Propylene Rubber ..... -70°F to 275°F (-57°C to 135°C)

Fluorocarbon Rubber..... -10°F to 400°F (-23°C to 204°C)

Neoprene Rubber..... -45°F to 250°F (-43°C to 121°C)

Flow Calculations

Inlet Pressure		Pressure Drop ΔP		Water @ 60°F (16°C)		Air @ 60°F (16°C)	
psig	bar	psig	bar	gpm	m³/hr	SCFM	m³/hr
100	6.9	1	0.1	0.8	0.2	8.0	12.7
		10	0.7	2.4	0.5	24.2	38.2
		50	3.4	5.3	1.2	44.7	68.2
200	13.8	10	0.7	2.4	0.5	33.8	55.4
		50	3.4	5.3	1.2	68.7	111.2
		100	6.9	7.5	1.7	85.0	136.8
300	20.7	100	6.9	7.5	1.7	112.2	184.9
		150	10.3	9.2	2.1	125.2	205.0
		200	13.8	10.6	2.4	130.4	212.2
400	27.6	150	10.3	9.2	2.1	153.9	255.1
		200	13.8	10.6	2.4	165.4	273.6
		250	17.2	11.9	2.7	171.1	281.9

Crack Pressure vs. Reseal Pressure

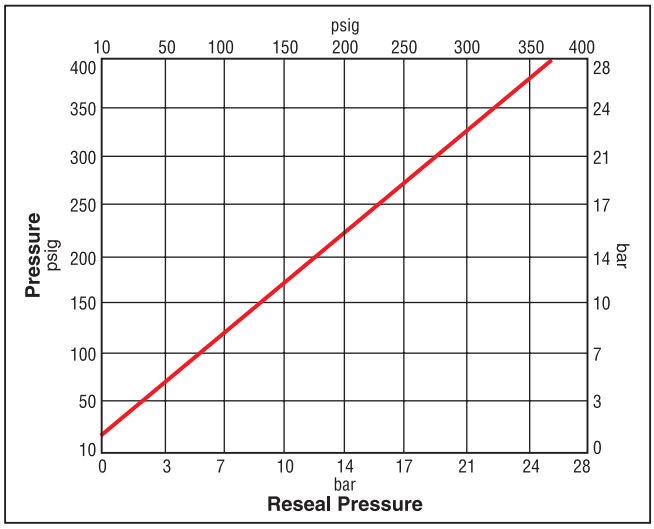

Note: Valves which are not actuated for a period of time may initially crack at higher than set crack pressures.

Note: To determine MPa, multiply bar by 0.1

Parker Hannifin Corporation
Instrumentation Products Division
Jacksonville, AL USA
http://www.parker.com/ipdus

Materials of Construction

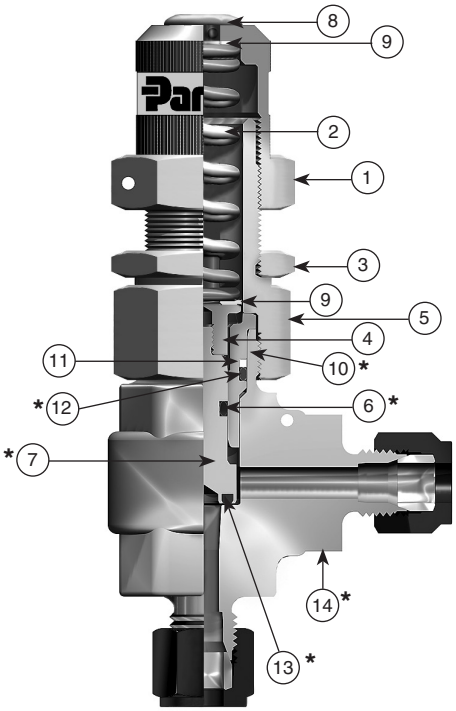

Model Shown: 4Z-RL4A-BNT-SS

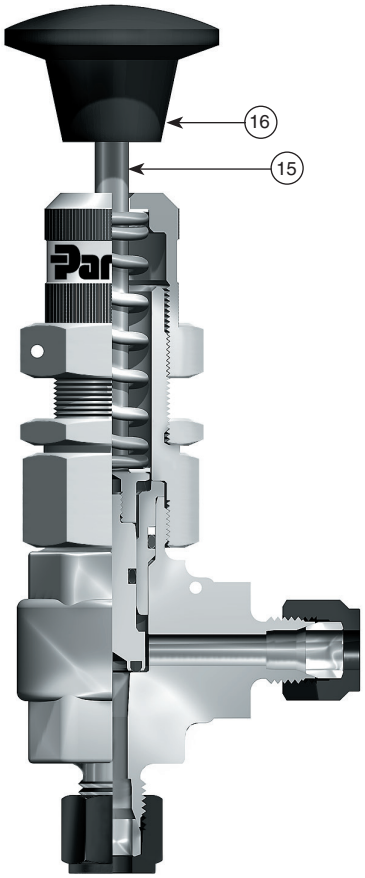

Model Shown: 4Z-RL4A-VT-SS-MN

Item #	Part	Material
1	Cap	ASTM A 479, Type 316
2	Spring	17Cr-7Ni Stainless Steel
3	Locknut	316 Stainless Steel
4	Upper Stem	ASTM A 479, Type 316
5	Bonnet	ASTM A 479, Type 316
*6	Stem Seal	**Fluorocarbon Rubber
*7	Lower Stem	ASTM A 479, Type 316
8	Plug	Zinc Plated Steel
9	Washer	PTFE
*10	Stem Guide	ASTM A 479, Type 316
11	Back-up Ring	PTFE
*12	Bonnet Seal	**Fluorocarbon Rubber
*13	Seat	**Fluorocarbon Rubber
*14	Valve Body	ASTM A 182, Type F316
15	Handle Stem	ASTM A 479, Type 316
16	Handle	Phenolic

* Wetted Parts
** Optional seat and seal materials are located in How to Order section.
Lubrication: Perfluorinated polyether.

Parker Hannifin Corporation
Instrumentation Products Division
Jacksonville, AL USA
http://www.parker.com/ipdus

Dimensions and Flow Data

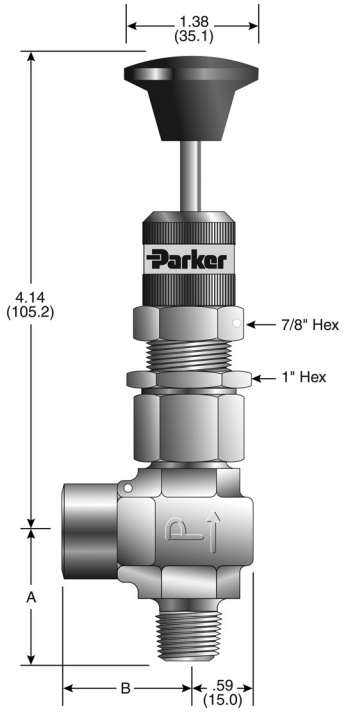

( ) Denotes dimensions in millimeters

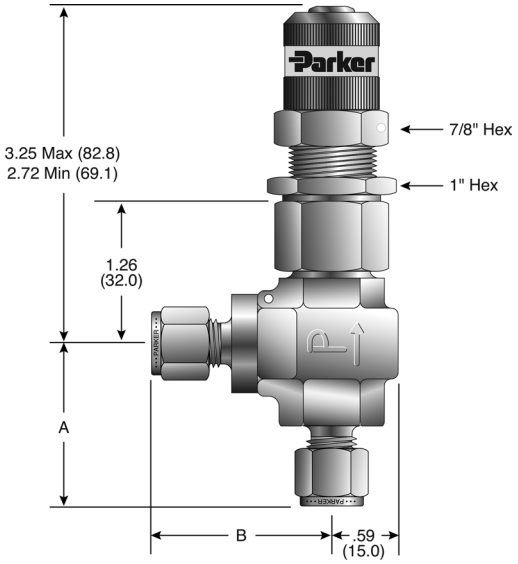

Model Shown: 4M4F-RL4A-VT-SS-MN

Model Shown: 4A-RL4A-BNT-SS

Dimensions in inches (millimeters) are for reference only, subject to change.

Basic Part Number	End Connections (Inlet) Port 1	Flow Data: Orifice Inch	Flow Data: Orifice mm	C_V	X_T*	Dimensions †: A inch	Dimensions †: A mm	Dimensions †: B inch	Dimensions †: B mm	Options: Seal Material	Options: Actuation
4A-RL4A-VT-SS	1/4" A-LOK® Compression	0.203	5.2	0.75	0.70	1.44	36.6	1.60	40.6	**BN** Nitrile Rubber; **EPR** Ethylene Propylene Rubber; **NE** Neoprene Rubber; **KZ** Highly Fluorinated Fluorocarb. Rubber	**MN** Manual Override
4Z-RL4A-VT-SS	1/4" CPI™ Compression					1.44	36.6	1.60	40.6		
4M4A-RL4A-VT-SS	1/4" Male NPT					1.19	30.2	1.60	40.6		
4M4Z-RL4A-VT-SS	1/4" Male NPT					1.19	30.2	1.60	40.6		
4M4F-RL4A-VT-SS	1/4" Male NPT					1.19	30.2	1.17	29.7		
4KF-RL4A-VT-SS	1/4" Female BSP/ISO Tapered					1.19	30.2	1.17	29.7		
4KM-RL4A-VT-SS	1/4" Male BSP/ISO Tapered					1.19	30.2	1.17	29.7		
M6A-RL4A-VT-SS	6mm A-LOK® Compression					1.44	36.6	1.60	40.6		
M6Z-RL4A-VT-SS	6mm CPI™ Compression					1.44	36.6	1.60	40.6		
M8A-RL4A-VT-SS	8mm A-LOK® Compression					1.44	36.6	1.60	40.6		
M8Z-RL4A-VT-SS	8mm CPI™ Compression					1.44	36.6	1.60	40.6		

* Tested in accordance with ISA S75.02. Gas flow will be choked when $P_1 - P_2 / P_1 = x_T$.

†For CPI™ and A-LOK®: Dimensions are measured with nuts in the finger tight position.

Parker Hannifin Corporation
Instrumentation Products Division
Jacksonville, AL USA
http://www.parker.com/ipdus

How to Order

The part number sequence identifies product characteristics as shown in the example below.

Example: 4Z-RL4A-BNT-SS Describes an RL4A Series externally adjustable relief valve equipped with 1/4" CPI™ compression inlet and outlet ports on a 1/4" angle pattern body, Nitrile seals, PTFE back-up ring, stainless steel construction.

4Z	–	RL4A	–	BN	T	–	SS	–	
Connection Size & Type		Body Size & Pattern		Seal Material	Back-Up Rings**		Body Material		Actuation

Spring Kits

Kit Part Number	Cracking Pressure Range (psig)	Cracking Pressure Range (bar)	Color Code
KIT-RL4SP-10-25	10-25	0.7-1.7	Magenta
KIT-RL4SP-25-50	25-50	1.7-3.4	Brown
KIT-RL4SP-50-100	50-100	3.4-6.9	Purple
KIT-RL4SP-100-150	100-150	6.9-10.3	Dark Green
KIT-RL4SP-150-225	150-225	10.3-15.5	Dark Blue
KIT-RL4SP-225-400	225-400	15.5-27.6	White
KIT-RL4SP-10-225	10-225	0.7-15.5	None

Spring Kit Contains:

- Spring
- Coded label
- PTFE washers Locking wire / lead seal
- Installation Instructions

Seal Kits

Kit Part Number	Seat/Seal Material
KIT-RL4-VT	Fluorocarbon Rubber
KIT-RL4-BNT	Nitrile Rubber
KIT-RL4-EPRT	Ethylene Propylene Rubber
KIT-RL4-NET	Neoprene Rubber
KIT-RL4-KZT	Highly Fluorinated Fluorocarbon Rubber

Seal Kit Contains:

- Stem Seal
- Bonnet Seal
- PTFE Back-Up Ring
- Lower Stem Assembly
- Maintenance Instructions

Parker Hannifin Corporation
Instrumentation Products Division
Jacksonville, AL USA
http://www.parker.com/ipdus

BV Series Bleed Valves

Introduction

Parker BV Series Bleed Valves are designed for use on products such as multi-valve manifolds or gauge/root valves. Functionally, the valve vents line pressure either to atmosphere or to containment when used with the optional barbed vent tube. Generally, bleed valves are used whenever an instrument is removed from a system or to assist in the calibration of control devices. The BV Series is also recommended for use in bleeding hydraulic systems.

Features

- Available in stainless steel
- Vent tube directs excess gas or liquid from system lines
- Chrome plated stem provides extended cycle life with improved sealability
- Positive stop/vent tube design prevents accidental removal of the stem
- Compact design
- Wrench actuation
- Available in a variety of end configurations including male pipe and SAE ports
- 100% factory tested
- Barbed vent tube option enables containment of vented media
- Optional T-bar handle for wrench-less actuation

Materials of Construction

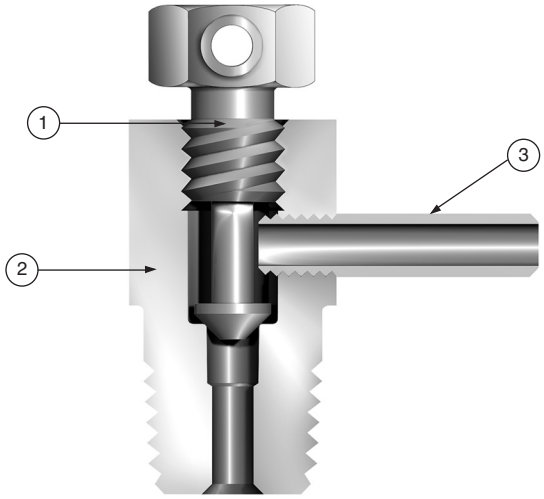

Model Shown: 4M-BV4-SS

Item #	Part	Stainless Steel
1	Stem	ASTM A479, Type 316
2	Valve Body	ASTM A479, Type 316
3	Vent Tube	316 Stainless Steel

Lubrication: Molybdenum disulfide with soft metallic fillers

Specifications

Pressure Rating:

.....10,000 psig (689 bar) CWP

Temperature Rating:

Stainless Steel..... -65°F to 850°F (-54°C to 454°C)

Flow Data

C_v = 0.13; x_T = 0.53; Orifice = 0.125" (3.2mm).
Tested in accordance with ISA S75.02.
Gas flow will be choked when $P_1 - P_2 / P_1 = x_T$.

Caution

These valves do not have a stem seal. It is imperative to open the valve slowly and direct the vent tube away from persons operating or near the valve. Because of the absence of a stem seal, small amounts of media will flow through the stem thread area when the valves are opened.

Parker Hannifin Corporation
Instrumentation Products Division
Jacksonville, AL USA
http://www.parker.com/ipdus

Dimensions

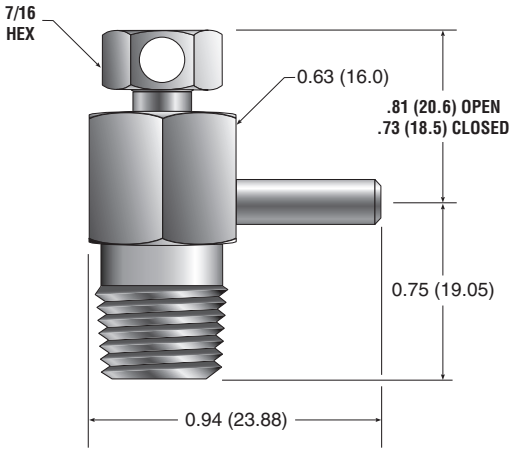

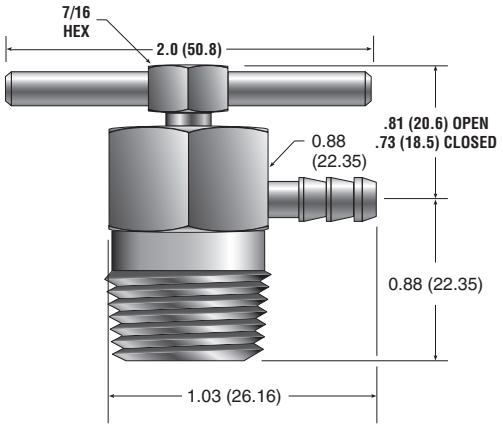

( ) Denotes dimensions in millimeters

Model Shown: 4M-BV4-SS **Model Shown: 8M-BV8-SS-BVT-T**

Dimensions in inches (millimeters) are for reference only, subject to change.

Basic Part Number	End Connections		Options	
	(Inlet) Port 1	(Outlet) Port 2	Vent Selection	Handle Option
2M-BV4-SS	1/8" Male NPT	3/16" O.D. Tube Stub	**BVT** Barbed Vent Tube	**T** Tee Bar Handle
4M-BV4-SS	1/4" Male NPT			
4KM-BV4-SS	1/4" Male BSP			
4F5-BV4-SS	1/4" Male SAE			
6M-BV8-SS	3/8" Male NPT			
8M-BV8-SS	1/2" Male NPT			
8F5-BV8-SS	1/2" Male SAE			

BV

How to Order

The part number sequence identifies product characteristics as shown in the example below.

Example: 4M-BVA-SS-BVT Describes a stainless steel BV4 Bleed Valve with a 1/4" male NPT inlet and a barbed vent tube outlet. It does not have a handle.

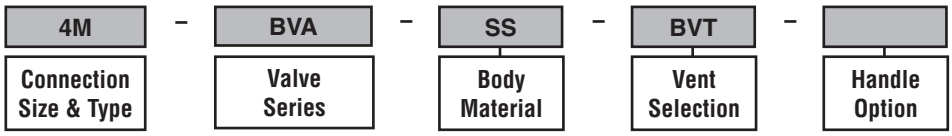

Parker Hannifin Corporation
Instrumentation Products Division
Jacksonville, AL USA
http://www.parker.com/ipdus

PG Series Purge Valves

Introduction

Parker PG Series Purge Valves may be utilized as either bleed, purge, or drain valves. The compact valve requires only a quarter turn with a wrench from finger-tight to ensure a leak-tight seal on the first make-up. Additional wrenching ensures a leak-tight seal up to the rated pressure.

Features

- A 0.055 inch (1.4 mm) diameter vent hole in the cap bleeds, drains, or purges system pressure
- Hex cap permits finger-tight or wrench assisted closure
- Crimped cap resists accidental disassembly
- A variety of body styles offers system design flexibility, reduced space requirements, and helps to eliminate leak paths
- Available in a variety of end configurations including: CPI™, A-LOK®, male and female NPT, SAE, and Tube Adapter connections
- 100% factory tested
- Optional PTFE Ball requires only finger-tight torque to achieve a leak-tight seal

Specifications

Temperature Rating:

Stainless Steel..... -65°F to 600°F (-54°C to 316°C)
Brass ..... -65°F to 400°F (-54°C to 204°C)
PTFE Ball Option..... -65°F to 350°F (-54°C to 177°C)

Pressure Rating:

Stainless Steel.....4000 psig (276 bar) CWP
Brass .....3000 psig (207 bar)
PTFE Ball Option..... 200 psig (14 bar)

Caution

These valves do not have a cap thread seal. It is imperative to open the valve slowly and direct the vent hole away from persons operating or near the valve. Because of the absence of a cap seal, small amounts of media will flow through the cap thread area when the valves are opened.

PTFE Ball Option

Purge Valves with the PTFE ball option require only finger-tight operation for leak-tight shut-off and are designed with a removable cap for ball replacement.

Materials of Construction and Dimensions

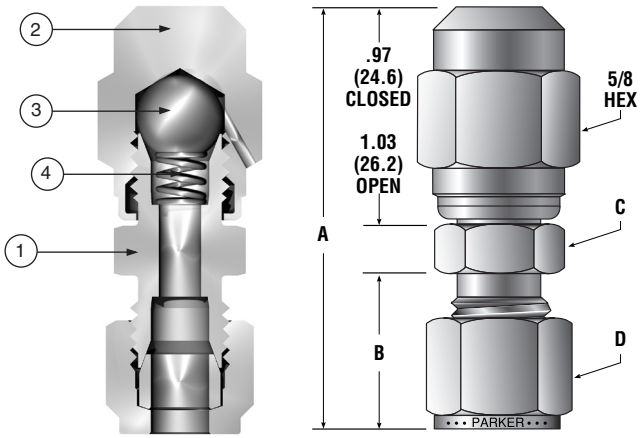

( ) Denotes dimensions in millimeters

Models Shown: 4Z-PG4L-SS

Item #	Part	Stainless Steel	Brass
1	Body	ASTM A479, Type 316	ASTM B16, Alloy C36000
2	Cap	ASTM A479, Type 316	ASTM B16, Alloy C36000
3	Ball	316 Stainless Steel*	
4	Vent Tube	316 Stainless Steel	

*Optional PTFE Ball available
Lubrication: Molybdenum disulfide with soft metallic fillers

PG

Parker Hannifin Corporation
Instrumentation Products Division
Jacksonville, AL USA
http://www.parker.com/ipdus

Dimensions

Dimensions in inches (millimeters) are for reference only, subject to change.

Basic Part Number	End Connections	Dimensions						Options	
		A* (Closed)*		B*		C (hex)	D (hex)	Material	Ball
		inch	mm	inch	mm	inch	inch		
2M-PG4L-SS	1/8" Male NPT	1.56	39.6	0.38	9.7	0.50	-	**B** Brass	**T** PTFE
2F-PG4L-SS	1/8" Female NPT	1.50	38.1	0.53	13.5	0.56	-		
4A-PG4L-SS	1/4" A-LOK® Compression	1.88	47.8	0.70	17.8	0.50	0.56		
4Z-PG4L-SS	1/4" CPI™ Compression	1.88	47.8	0.70	17.8	0.50	0.56		
4M-PG4L-SS	1/4" Male NPT	1.76	44.7	0.56	14.2	0.56	-		
4F-PG4L-SS	1/4" Female NPT	1.69	42.9	0.72	18.3	0.75	-		
4F5-PG4L-SS	1/4" Male SAE	1.78	45.2	0.41	10.4	0.75	-		
4TA-PG4L-SS	1/4" Tube Adapter	1.91	48.5	0.72	18.3	0.50	-		
6A-PG4L-SS	3/8" A-LOK® Compression	1.98	50.3	0.76	19.3	0.63	0.69		
6Z-PG4L-SS	3/8" CPI™ Compression	1.98	50.3	0.76	19.3	0.63	0.69		
6M-PG4L-SS	3/8" Male NPT	1.78	45.2	0.56	14.2	0.69	-		
6F-PG4L-SS	3/8" Female NPT	1.75	44.5	0.78	19.8	0.88	-		
6TA-PG4L-SS	3/8" Tube Adapter	1.97	50.0	0.78	19.8	0.50	-		
M6A-PG4L-SS	6mm A-LOK® Compression	1.88	47.8	0.70	17.8	0.55	0.55		
M6Z-PG4L-SS	6mm CPI™ Compression	1.88	47.8	0.70	17.8	0.55	0.55		
8A-PG4L-SS	1/2" A-LOK® Compression	2.12	53.8	0.87	22.1	0.81	0.88		
8Z-PG4L-SS	1/2" CPI™ Compression	2.12	53.8	0.87	22.1	0.81	0.88		
8M-PG4L-SS	1/2" Male NPT	2.03	51.6	0.75	19.1	0.88	-		
8F-PG4L-SS	1/2" Female NPT	1.94	49.3	0.97	24.6	1.06	-		
8F5-PG4L-SS	1/2" Male SAE	2.08	52.8	0.47	11.9	1.13	-		
8TA-PG4L-SS	1/2" Tube Adapter	2.22	56.4	1.03	26.2	0.56	-		
M8A-PG4-SS	8mm A-LOK® Compression	1.97	50.0	0.75	19.1	0.63	0.63		
M8Z-PG4L-SS	8mm CPI™ Compression	1.97	50.0	0.75	19.1	0.63	0.63		

* For CPI™ and A-LOK®, dimensions are measured with nuts in the finger tight position.

PG

How to Order

The part number sequence identifies product characteristics as shown in the example below.

Example: 2M-PG4L-SS-T Describes a stainless steel, Purge Valve with a 1/8" male NPT port configuration and a PTFE Ball.

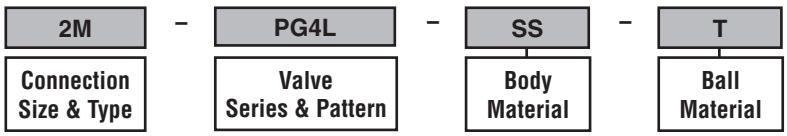

Option

Oxygen Cleaning – Add the suffix **-C3** to the end of the part number to receive valves cleaned in accordance with ASTM G93 level C, class 500. This ASTM details cleaning methods and cleanliness levels for materials and equipment used in oxygen-enriched environments.
Example: 2M-PG4L-SS-T-C3

Parker Hannifin Corporation
Instrumentation Products Division
Jacksonville, AL USA
http://www.parker.com/ipdus

End Connections Indentification

Available End Connections

Standard End Connections

A - Two ferrule A-LOK® compression port

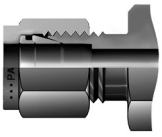

Z - Single ferrule CPI™ compression port

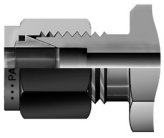

F - ANSI/ASME B1.20.1 internal pipe threads

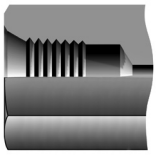

M - NSI/ASME B1.20.1 external pipe threads

Non-Standard End Connections

TA - Tube adapter connection

F5 - SAE J1926/2, Part 2: Heavy-duty (S Series) stud ends

G5 - SAE J1926/1, Part 1: Threaded port with O-ring seal in truncated housing

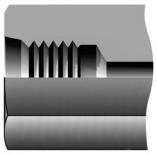

L - SAE J1453, Fitting – O-ring face seal – External thread with O-ring groove designed to seal with an elastomer against a sleeve

KF - British Standard BS 21 (ISO 7-1), Internal pipe threads

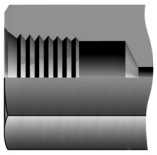

KM - British Standard BS 21 (ISO 7-1), External pipe threads

V - VacuSeal face seal port

Parker Hannifin Corporation
Instrumentation Products Division
Jacksonville, AL USA
http://www.parker.com/ipdus

Offer of Sale

The items described in this document and other documents and descriptions provided by Parker Hannifin Corporation, its subsidiaries and its authorized distributors ("Seller") are hereby offered for sale at prices to be established by Seller. This offer and its acceptance by any customer ("Buyer") shall be governed by all of the following Terms and Conditions. Buyer's order for any item described in its document, when communicated to Seller verbally, or in writing, shall constitute acceptance of this offer. All goods or work described will be referred to as "Products".

1. Terms and Conditions. Seller's willingness to offer Products, or accept an order for Products, to or from Buyer is expressly conditioned on Buyer's assent to these Terms and Conditions and to the terms and conditions found on-line at www.parker.com/saleterms/. Seller objects to any contrary or additional term or condition of Buyer's order or any other document issued by Buyer.

2. Price Adjustments; Payments. Prices stated on the reverse side or preceding pages of this document are valid for 30 days. After 30 days, Seller may change prices to reflect any increase in its costs resulting from state, federal or local legislation, price increases from its suppliers, or any change in the rate, charge, or classification of any carrier. The prices stated on the reverse or preceding pages of this document do not include any sales, use, or other taxes unless so stated specifically. Unless otherwise specified by Seller, all prices are F.O.B. Seller's facility, and payment is due 30 days from the date of invoice. After 30 days, Buyer shall pay interest on any unpaid invoices at the rate of 1.5% per month or the maximum allowable rate under applicable law.

3. Delivery Dates; Title and Risk; Shipment. All delivery dates are approximate and Seller shall not be responsible for any damages resulting from any delay. Regardless of the manner of shipment, title to any products and risk of loss or damage shall pass to Buyer upon tender to the carrier at Seller's facility (i.e., when it's on the truck, it's yours). Unless otherwise stated, Seller may exercise its judgment in choosing the carrier and means of delivery. No deferment of shipment at Buyers' request beyond the respective dates indicated will be made except on terms that will indemnify, defend and hold Seller harmless against all loss and additional expense. Buyer shall be responsible for any additional shipping charges incurred by Seller due to Buyer's changes in shipping, product specifications or in accordance with Section 13, herein.

4. Warranty. Seller warrants that the Products sold here-under shall be free from defects in material or workmanship for a period of twelve months from the date of delivery to Buyer or 2,000 hours of normal use, whichever occurs first. This warranty is made only to Buyer and does not extend to anyone to whom Products are sold after purchased from Seller. The prices charged for Seller's products are based upon the exclusive limited warranty stated above, and upon the following disclaimer: DISCLAIMER OF WARRANTY: THIS WARRANTY COMPRISES THE SOLE AND ENTIRE WARRANTY PERTAINING TO PRODUCTS PROVIDED HEREUNDER. SELLER DISCLAIMS ALL OTHER WARRANTIES, EXPRESS AND IMPLIED, INCLUDING MERCHANTABILITY AND FITNESS FOR A PARTICULAR PURPOSE.

5. Claims; Commencement of Actions. Buyer shall promptly inspect all Products upon delivery. No claims for shortages will be allowed unless reported to the Seller within 10 days of delivery. No other claims against Seller will be allowed unless asserted in writing within 60 days after delivery or, in the case of an alleged breach of warranty, within 30 days after the date within the warranty period on which the defect is or should have been discovered by Buyer. Any action based upon breach of this agreement or upon any other claim arising out of this sale (other than an action by Seller for any amount due to Seller from Buyer) must be commenced within thirteen months from the date of tender of delivery by Seller or, for a cause of action based upon an alleged breach of warranty, within thirteen months from the date within the warranty period on which the defect is or should have been discovered by Buyer.

6. LIMITATION OF LIABILITY. UPON NOTIFICATION, SELLER WILL, AT ITS OPTION, REPAIR OR REPLACE A DEFECTIVE PRODUCT, OR REFUND THE PURCHASE PRICE. IN NO EVENT SHALL SELLER BE LIABLE TO BUYER FOR ANY SPECIAL, INDIRECT, INCIDENTAL OR CONSEQUENTIAL DAMAGES ARISING OUT OF, OR AS THE RESULT OF, THE SALE, DELIVERY, NON-DELIVERY, SERVICING, USE OR LOSS OF USE OF THE PRODUCTS OR ANY PART THEREOF, OR FOR ANY CHARGES OR EXPENSES OF ANY NATURE INCURRED WITHOUT SELLER'S WRITTEN CONSENT, EVEN IF SELLER HAS BEEN NEGLIGENT, WHETHER IN CONTRACT, TORT OR OTHER LEGAL THEORY. IN NO EVENT SHALL SELLER'S LIABILITY UNDER ANY CLAIM MADE BY BUYER EXCEED THE PURCHASE PRICE OF THE PRODUCTS.

7. Contingencies. Seller shall not be liable for any default or delay in performance if caused by circumstances beyond the reasonable control of Seller.

8. User Responsibility. The user, through its own analysis and testing, is solely responsible for making the final selection of the system and Product and assuring that all performance, endurance, maintenance, safety and warning requirements of the application are met. The user must analyze all aspects of the application and follow applicable industry standards and Product information. If Seller provides Product or system options, the user is responsible for determining that such data and specifications are suitable and sufficient for all applications and reasonably foreseeable uses of the Products or systems.

9. Loss to Buyer's Property. Any designs, tools, patterns, materials, drawings, confidential information or equipment furnished by Buyer or any other items which become Buyer's property, may be considered obsolete and may be destroyed by Seller after two consecutive years have elapsed without Buyer placing an order for the items which are manufactured using such property. Seller shall not be responsible for any loss or damage to such property while it is in Seller's possession or control.

10. Special Tooling. A tooling charge may be imposed for any special tooling, including without limitation, dies, fixtures, molds and patterns, acquired to manufacture Products.

Parker Hannifin Corporation
Instrumentation Products Division
Jacksonville, AL USA
http://www.parker.com/ipdus

Such special tooling shall be and remain Seller's property notwithstanding payment of any charges by Buyer. In no event will Buyer acquire any interest in apparatus belonging to Seller which is utilized in the manufacture of the Products, even if such apparatus has been specially converted or adapted for such manufacture and notwithstanding any charges paid by Buyer. Unless otherwise agreed, Seller shall have the right to alter, discard or otherwise dispose of any special tooling or other property in its sole discretion at any time.

11. Buyer's Obligation; Rights of Seller. To secure payment of all sums due or otherwise, Seller shall retain a security interest in the goods delivered and this agreement shall be deemed a Security Agreement under the Uniform Commercial Code. Buyer authorizes Seller as its attorney to execute and file on Buyer's behalf all documents Seller deems necessary to perfect its security interest. Seller shall have a security interest in, and lien upon, any property of Buyer in Seller's possession as security for the payment of any amounts owed to Seller by Buyer.

12. Improper use and Indemnity. Buyer shall indemnify, defend, and hold Seller harmless from any claim, liability, damages, lawsuits, and costs (including attorney fees), whether for personal injury, property damage, patent, trademark or copyright infringement or any other claim, brought by or incurred by Buyer, Buyer's employees, or any other person, arising out of: (a) improper selection, improper application or other misuse of Products purchased by Buyer from Seller; (b) any act or omission, negligent or otherwise, of Buyer; (c) Seller's use of patterns, plans, drawings, or specifications furnished by Buyer to manufacture Product; or (d) Buyer's failure to comply with these terms and conditions. Seller shall not indemnify Buyer under any circumstance except as otherwise provided.

13. Cancellations and Changes. Orders shall not be subject to cancellation or change by Buyer for any reason, except with Seller's written consent and upon terms that will indemnify, defend and hold Seller harmless against all direct, incidental and consequential loss or damage. Seller may change product features, specifications, designs and availability with notice to Buyer.

14. Limitation on Assignment. Buyer may not assign its rights or obligations under this agreement without the prior written consent of Seller.

15. Entire Agreement. This agreement contains the entire agreement between the Buyer and Seller and constitutes the final, complete and exclusive expression of the terms of the agreement. All prior or contemporaneous written or oral agreements or negotiations with respect to the subject matter are herein merged.

16. Waiver and Severability. Failure to enforce any provision of this agreement will not waive that provision nor will any such failure prejudice Seller's right to enforce that provision in the future. Invalidation of any provision of this agreement by legislation or other rule of law shall not invalidate any other provision herein. The remaining provisions of this agreement will remain in full force and effect.

17. Termination. This agreement may be terminated by Seller for any reason and at any time by giving Buyer thirty (30) days written notice of termination. In addition, Seller may by written notice immediately terminate this agreement for the following: (a) Buyer commits a breach of any provision of this agreement (b) the appointment of a trustee, receiver or custodian for all or any part of Buyer's property (c) the filing of a petition for relief in bankruptcy of the other Party on its own behalf, or by a third party (d) an assignment for the benefit of creditors, or (e) the dissolution or liquidation of the Buyer.

18. Governing Law. This agreement and the sale and delivery of all Products hereunder shall be deemed to have taken place in and shall be governed and construed in accordance with the laws of the State of Ohio, as applicable to contracts executed and wholly performed therein and without regard to conflicts of laws principles. Buyer irrevocably agrees and consents to the exclusive jurisdiction and venue of the courts of Cuyahoga County, Ohio with respect to any dispute, controversy or claim arising out of or relating to this agreement. Disputes between the parties shall not be settled by arbitration unless, after a dispute has arisen, both parties expressly agree in writing to arbitrate the dispute.

19. Indemnity for Infringement of Intellectual Property Rights. Seller shall have no liability for infringement of any patents, trademarks, copyrights, trade dress, trade secrets or similar rights except as provided in this Section. Seller will defend and indemnify Buyer against allegations of infringement of U.S. patents, U.S. trademarks, copyrights, trade dress and trade secrets ("Intellectual Property Rights"). Seller will defend at its expense and will pay the cost of any settlement or damages awarded in an action brought against Buyer based on an allegation that a Product sold pursuant to this Agreement infringes the Intellectual Property Rights of a third party. Seller's obligation to defend and indemnify Buyer is contingent on Buyer notifying Seller within ten (10) days after Buyer becomes aware of such allegations of infringement, and Seller having sole control over the defense of any allegations or actions including all negotiations for settlement or compromise. If a Product is subject to a claim that it infringes the Intellectual Property Rights of a third party, Seller may, at its sole expense and option, procure for Buyer the right to continue using the Product, replace or modify the Product so as to make it noninfringing, or offer to accept return of the Product and return the purchase price less a reasonable allowance for depreciation. Notwithstanding the foregoing, Seller shall have no liability for claims of infringement based on information provided by Buyer, or directed to Products delivered hereunder for which the designs are specified in whole or part by Buyer, or infringements resulting from the modification, combination or use in a system of any Product sold hereunder. The foregoing provisions of this Section shall constitute Seller's sole and exclusive liability and Buyer's sole and exclusive remedy for infringement of Intellectual Property Rights.

20. Taxes. Unless otherwise indicated, all prices and charges are exclusive of excise, sales, use, property, occupational or like taxes which may be imposed by any taxing authority upon the manufacture, sale or delivery of Products.

21. Equal Opportunity Clause. For the performance of government contracts and where dollar value of the Products exceed $10,000, the equal employment opportunity clauses in Executive Order 11246, VEVRAA, and 41 C.F.R. §§ 60-1.4(a), 60-741.5(a), and 60-250.4, are hereby incorporated.

01/09

Parker Hannifin Corporation
Instrumentation Products Division
Jacksonville, AL USA
http://www.parker.com/ipdus

Parker's Motion & Control Technologies

At Parker, we're guided by a relentless drive to help our customers become more productive and achieve higher levels of profitability by engineering the best systems for their requirements. It means looking at customer applications from many angles to find new ways to create value. Whatever the motion and control technology need, Parker has the experience, breadth of product and global reach to consistently deliver. No company knows more about motion and control technology than Parker. For further info call 1-800-C-Parker.

AEROSPACE

Key Markets
- Aircraft engines
- Business & general aviation
- Commercial transports
- Land-based weapons systems
- Military aircraft
- Missiles & launch vehicles
- Regional transports
- Unmanned aerial vehicles

Key Products
- Flight control systems & components
- Fluid conveyance systems
- Fluid metering delivery & atomization devices
- Fuel systems & components
- Hydraulic systems & components
- Inert nitrogen generating systems
- Pneumatic systems & components
- Wheels & brakes

CLIMATE CONTROL

Key Markets
- Agriculture
- Air conditioning
- Food, beverage & dairy
- Life sciences & medical
- Precision cooling
- Processing
- Transportation

Key Products
- CO^2 controls
- Electronic controllers
- Filter driers
- Hand shut-off valves
- Hose & fittings
- Pressure regulating valves
- Refrigerant distributors
- Safety relief valves
- Solenoid valves
- Thermostatic expansion valves

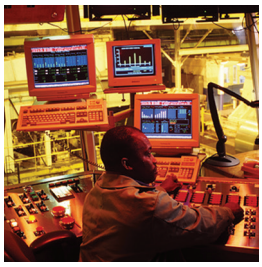

ELECTROMECHANICAL

Key Markets
- Aerospace
- Factory automation
- Life science & medical
- Machine tools
- Packaging machinery
- Paper machinery
- Plastics machinery & converting
- Primary metals
- Semiconductor & electronics
- Textile
- Wire & cable

Key Products
- AC/DC drives & systems
- Electric actuators, gantry robots & slides
- Electrohydrostatic actuation systems
- Electromechanical actuation systems
- Human machine interface
- Linear motors
- Stepper motors, servo motors, drives & controls
- Structural extrusions

FILTRATION

Key Markets
- Food & beverage
- Industrial machinery
- Life sciences
- Marine
- Mobile equipment
- Oil & gas
- Power generation
- Process
- Transportation

Key Products
- Analytical gas generators
- Compressed air & gas filters
- Condition monitoring
- Engine air, fuel & oil filtration & systems
- Hydraulic, lubrication & coolant filters
- Process, chemical, water & microfiltration filters
- Nitrogen, hydrogen & zero air generators

FLUID & GAS HANDLING

Key Markets
- Aerospace
- Agriculture
- Bulk chemical handling
- Construction machinery
- Food & beverage
- Fuel & gas delivery
- Industrial machinery
- Mobile
- Oil & gas
- Transportation
- Welding

Key Products
- Brass fittings & valves
- Diagnostic equipment
- Fluid conveyance systems
- Industrial hose
- PTFE & PFA hose, tubing & plastic fittings
- Rubber & thermoplastic hose & couplings
- Tube fittings & adapters
- Quick disconnects

HYDRAULICS

Key Markets
- Aerospace
- Aerial lift
- Agriculture
- Construction machinery
- Forestry
- Industrial machinery
- Mining
- Oil & gas
- Power generation & energy
- Truck hydraulics

Key Products
- Diagnostic equipment
- Hydraulic cylinders & accumulators
- Hydraulic motors & pumps
- Hydraulic systems
- Hydraulic valves & controls
- Power take-offs
- Rubber & thermoplastic hose & couplings
- Tube fittings & adapters
- Quick disconnects

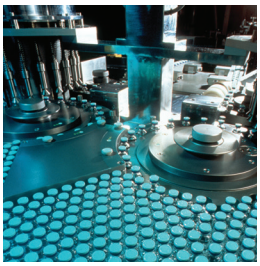

PNEUMATICS

Key Markets
- Aerospace
- Conveyor & material handling
- Factory automation
- Life science & medical
- Machine tools
- Packaging machinery
- Transportation & automotive

Key Products
- Air preparation
- Brass fittings & valves
- Manifolds
- Pneumatic accessories
- Pneumatic actuators & grippers
- Pneumatic valves & controls
- Quick disconnects
- Rotary actuators
- Rubber & thermoplastic hose & couplings
- Structural extrusions
- Thermoplastic tubing & fittings
- Vacuum generators, cups & sensors

PROCESS CONTROL

Key Markets
- Chemical & refining
- Food, beverage & dairy
- Medical & dental
- Microelectronics
- Oil & gas
- Power generation

Key Products
- Analytical sample conditioning products & systems
- Fluoropolymer chemical delivery fittings, valves & pumps
- High purity gas delivery fittings, valves & regulators
- Instrumentation fittings, valves & regulators
- Medium pressure fittings & valves
- Process control manifolds

SEALING & SHIELDING

Key Markets
- Aerospace
- Chemical processing
- Consumer
- Energy, oil & gas
- Fluid power
- General industrial
- Information technology
- Life sciences
- Military
- Semiconductor
- Telecommunications
- Transportation

Key Products
- Dynamic seals
- Elastomeric o-rings
- EMI shielding
- Extruded & precision-cut, fabricated elastomeric seals
- Homogeneous & inserted elastomeric shapes
- High temperature metal seals
- Metal & plastic retained composite seals
- Thermal management

Parker

ENGINEERING YOUR SUCCESS.

Parker Worldwide

North America

USA – Corporate, Cleveland, OH
Tel: +1 256 896 3000

USA – IPD, Huntsville, AL
Tel: +1 256 881 2040
ipdcct@parker.com

USA – IPD, (Autoclave), Erie, PA
Tel: +1 814 860 5700
ipdaecct@parker.com

CA – Canada, Grimsby, Ontario
Tel +1 905-945-2274
ipd_canada@parker.com

South America

AR – Argentina, Buenos Aires
Tel: +54 3327 44 4129
falecom@parker.com

BR – Brazil, Sao Jose dos Campos
Tel: +55 12 4009 3504
falecom@parker.com

CL – Chile, Santiago
Tel: +56 (0) 2 2303 9640
falecom@parker.com

MX – Mexico, Toluca
Tel: +52 722 275 4200
contacto@parker.com

Asia Pacific

AU – Australia, Dandenong
Tel: +61 (0)2 9842 5150
customer.service.au@parker.com

CN – China, Shanghai
Tel: +86 21 2899 5000
INGtechnical.china@parker.com

HK – Hong Kong
Tel: +852 2428 8008

IN – India, Mumbai
Tel: +91 22 6513 7081-85

ID – Indonesia, Tangerang
Tel: +62 (0)21 7588 1906
parker.id@parker.com

JP – Japan, Tokyo
Tel: +(81) 3 6408 3900
infophj@parker.com

KR – South Korea, Seoul
Tel: +82 2 559 0400
parkerkr@parker.com

MY – Malaysia, Selangor
Tel: +603 784 90 800
parkermy@parker.com

SG – Singapore,
Tel: +65 6887 6300
parkersg@parker.com

TH – Thailand, Bangkok
Tel: +66 2 186 7000
phthailand@parker.com

TW – Taiwan, Taipei
Tel: +886 2 2298 8987
enquiry.taiwan@parker.com

VN – Vietnam, Hochi Minh City
Tel: +848 382 508 56
parker_viet@parker.com

Europe, Middle East, Africa

AE – UAE, Dubai
Tel: +971 4 8875600
parker.me@parker.com

AT – Austria, Wiener Neustadt
Tel: +43 (0)2622 23501-0
parker.austria@parker.com

AT – Eastern Europe, Wiener Neustadt
Tel: +43 (0)2622 23501 970
parker.easteurope@parker.com

AZ – Azerbaijan, Baku
Tel: +994 50 2233 458
parker.azerbaijan@parker.com

BE/LU – Belgium, Nivelles
Tel: +32 (0)67 280 900
parker.belgium@parker.com

BG – Bulgaria, Sofia
Tel: +359 2 980 1344
parker.bulgaria@parker.com

BY – Belarus, Minsk
Tel: +375 17 209 9399
parker.belarus@parker.com

CH – Switzerland, Etoy
Tel: +41 (0) 21 821 02 30
parker.switzerland@parker.com

CZ – Czech Republic, Klecany
Tel: +420 284 083 111
parker.czechrepublic@parker.com

DE – Germany, Kaarst
Tel: +49 (0)2131 4016 0
parker.germany@parker.com

DK – Denmark, Ballerup
Tel: +45 43 56 04 00
parker.denmark@parker.com

ES – Spain, Madrid
Tel: +34 902 33 00 01
parker.spain@parker.com

FI – Finland, Vantaa
Tel: +358 (0)20 753 2500
parker.finland@parker.com

FR – France, Contamine s/Arve
Tel: +33 (0)4 50 25 80 25
parker.france@parker.com

GR – Greece, Athens
Tel: +30 210 933 6450
parker.greece@parker.com

HU – Hungary, Budapest
Tel: +36 1 220 4155
parker.hungary@parker.com

IE – Ireland, Dublin
Tel: +353 (0)1 466 6370
parker.ireland@parker.com

IT – Italy, Corsico (MI)
Tel: +39 02 45 19 21
parker.italy@parker.com

KZ – Kazakhstan, Almaty
Tel: +7 7272 505 800
parker.easteurope@parker.com

NL – The Netherlands, Oldenzaal
Tel: +31 (0)541 585 000
parker.nl@parker.com

NO – Norway, Stavanger
Tel: +47 (0)51 826 300
parker.norway@parker.com

PL – Poland, Warsaw
Tel: +48 (0)22 573 24 00
parker.poland@parker.com

PT – Portugal, Leca da Palmeira
Tel: +351 22 999 7360
parker.portugal@parker.com

RO – Romania, Bucharest
Tel: +40 21 252 1382
parker.romania@parker.com

RU – Russia, Moscow
Tel: +7 495 645-2156
parker.russia@parker.com

SE – Sweden, Spånga
Tel: +46 (0)8 59 79 50 00
parker.sweden@parker.com

SK – Slovakia, Banská Bystrica
Tel: +421 484 162 252
parker.slovakia@parker.com

SL – Slovenia, Novo Mesto
Tel: +386 7 337 6650
parker.slovenia@parker.com

TR – Turkey, Istanbul
Tel: +90 216 4997081
parker.turkey@parker.com

UA – Ukraine, Kiev
Tel: +380 44 494 2731
parker.ukraine@parker.com

UK – United Kingdom, Warwick
Tel: +44 (0)1926 317878
parker.uk@parker.com

ZA – South Africa, Kempton Park
Tel: +27 (0)11 961 0700
parker.southafrica@parker.com

WARNING

FAILURE, IMPROPER SELECTION OR IMPROPER USE OF THE PRODUCTS AND/OR SYSTEMS DESCRIBED HEREIN OR RELATED ITEMS CAN CAUSE DEATH, PERSONAL INJURY AND PROPERTY DAMAGE.

This document and other information from Parker Hannifin Corporation, its subsidiaries and authorized distributors provide product and/or system options for further investigation by users having technical expertise. It is important that you analyze all aspects of your application and review the information concerning the product or system in the current product catalog. Due to the variety of operating conditions and applications for these products or systems, the user, through its own analysis and testing, is solely responsible for making the final selection of the products and systems and assuring that all performance, safety and warning requirements of the application are met. The products described herein, including without limitation, product features, specifications, designs, availability and pricing, are subject to change by Parker Hannifin Corporation and its subsidiaries at any time without notice.

Offer of Sale

The items described in this document are available for sale by Parker Hannifin Corporation, its subsidiaries or its authorized distributors. Any sale contract entered by Parker will be governed by the provisions stated in Parker's standard terms and conditions of sale (copy available upon request).

©2019 Parker Hannifin Corporation | Instrumentation Products Division

Catalog 4135-CV April 2019

Parker Hannifin Corporation
Instrumentation Products Division
2651 Alabama Highway 21 North
Jacksonville, AL 36265-681
Tel: 256 435 2130
Fax: 256 435 7718
www.parker.com/ipdus

Authorized Distributor
MONILEK OILFIELD

E: sales@monilek.com
W: www.monilekgroup.com