Authorized Distributor
MONILEK OILFIELD

E: sales@monilek.com
W: www.monilekgroup.com

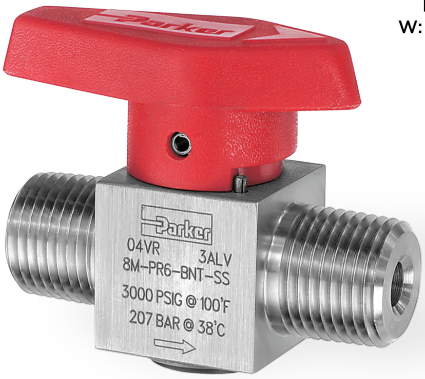

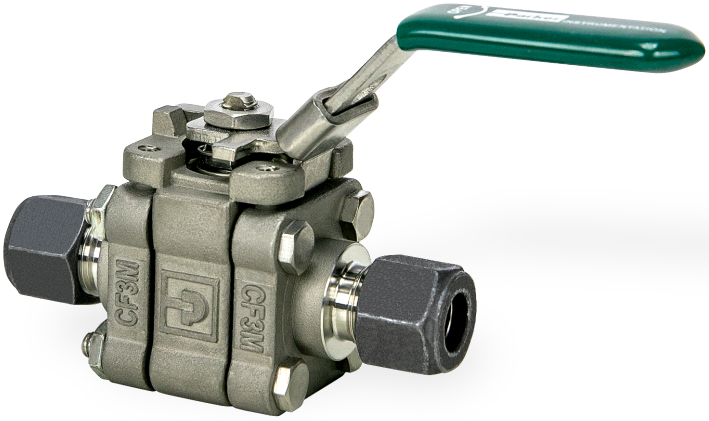

BALL & PLUG VALVES

Ball Valves, Actuators, and End Connections

Catalog 4121-BV | February 2024

© 2024 Parker Hannifin Corporation. All Rights Reserved.

* Actual pressure rating will be determined by the valve configuration, such as body material, seat material, etc. Contact the factory for more information.

WARNING

FAILURE, IMPROPER SELECTION OR IMPROPER USE OF THE PRODUCTS AND/OR SYSTEMS DESCRIBED HEREIN OR RELATED ITEMS CAN CAUSE DEATH, PERSONAL INJURY AND PROPERTY DAMAGE.

This document and other information from Parker Hannifin Corporation, its subsidiaries and authorized distributors provide product and/or system options for further investigation by users having technical expertise. It is important that you analyze all aspects of your application and review the information concerning the product or system in the current product catalog. Due to the variety of operating conditions and applications for these products or systems, the user, through its own analysis and testing, is solely responsible for making the final selection of the products and systems and assuring that all performance, safety and warning requirements of the application are met. The products described herein, including without limitation, product features, specifications, designs, availability and pricing, are subject to change by Parker Hannifin Corporation and its subsidiaries at any time without notice.

Offer of Sale

The items described in this document are available for sale by Parker Hannifin Corporation, its subsidiaries or its authorized distributors. Any sale contract entered by Parker will be governed by the provisions stated in Parker's standard terms and conditions of sale (copy available upon request).

TABLE OF CONTENTS

Description	Page
B Series Ball Valves, 6,000 psi Maximum*	**4**
2-Way and 3-Way	5
PR Series Rotary Plug Valves, 3,000 psi Maximum*	**14**
MB Series Ball Valves, 3,000 psi Maximum*	**20**
2-Way In-Line	22
2-Way Angle	23
SWB Series Ball Valves, 2,500 psi Maximum*	**26**
HB Series Ball Valves, 10,000 psi Maximum*	**32**
Pneumatic Actuators	**38**
Electric Actuators	**50**
Available End Connections	**58**
Offer of Sale	**60**

Download
Support Assets

WWW PDF CAD

B Series Ball Valves

TOC

Parker manually, pneumatically, and electrically actuated **2-way B Series Ball Valves** provide quick 1/4 turn on-off control of fluids utilized in process and instrumentation applications. A broad selection of valve body, seat, and seal materials provide a wide range of pressures and temperatures at which the valve may be used.

3-way B Series Ball Valves may be used as diverting or selecting valves for fluids utilized in process and instrumentation applications. The standard 3-way diverter valve is designed to accept media through the bottom port and direct it out of two outlet ports. When equipped with spring-loaded seats, the 3-way valve may be used as a selector valve, alternately accepting media from either of two inlet sources (side ports) and directing it through a single outlet (bottom port).

Features

- Free floating ball design provides seat wear compensation.
- Available in 316 stainless steel and brass construction. Limited selection available in Monel® Alloy 400 and Hastelloy® C-276 construction available upon request.
- Micro-finished ball provides a positive seal.
- Straight through flow path for minimum pressure drop.
- Bi-directional flow.
- Wide variety of US Customary and SI ports.
- 90° 2-Way and 180° 3-Way actuation
- Panel mountable.
- Adjustable PTFE stem seal can be maintained in-line.
- Handle indicates flow direction.
- Low operating torques.
- Positive handle stops.
- Color coded handles.
- Optional pneumatic and electric actuation.
- Optional live-loaded PTFE stem seals.
- Optional non-adjustable O-ring stem seals.
- Optional upstream and downstream drain models.
- Optional stainless steel and extended handles.

Specifications

Pressure Ratings: 2-Way & 3-Way with bottom port as the inlet.

Material	Pressure Rating	with PTFE Seats
316 Stainless Steel	6000 psig (414 bar)*	1500 psig (103 bar)
Brass	3000 psig (207 bar)	1500 psig (103 bar)
Monel® Alloy 400	3000 psig (207 bar)	1500 psig (103 bar)
Hastelloy® C-276	3000 psig (207 bar)	1500 psig (103 bar)

* B6 Series: 6000 psig rating or 4400 psig (303 bar) CWP
B8 Series: 6000 psig rating or 4000 psig (276 bar) CWP

Pressure Rating and Tubing Selection:

For working pressures of A-LOK® and CPI™ tube connections, please see the Instrument Tubing Selection Guide (Bulletin 4200-TS), found in the Technical Section of the Parker Instrumentation Process Control Binder, or the Parker Instrument Fitting Installation Manual (Bulletin 4200-B4).

For working pressures of valves with external or internal pipe threads, please see Catalog 4260, Instrumentation Pipe Fittings.

Pressure Rating for 3-Way with side port as the inlet:

Diverter - 150 psig (10 bar)
Selector - 3000 psig (207 bar)

Materials of Construction

2-Way Valve: Model Shown: 6A-B6LJ-SSP

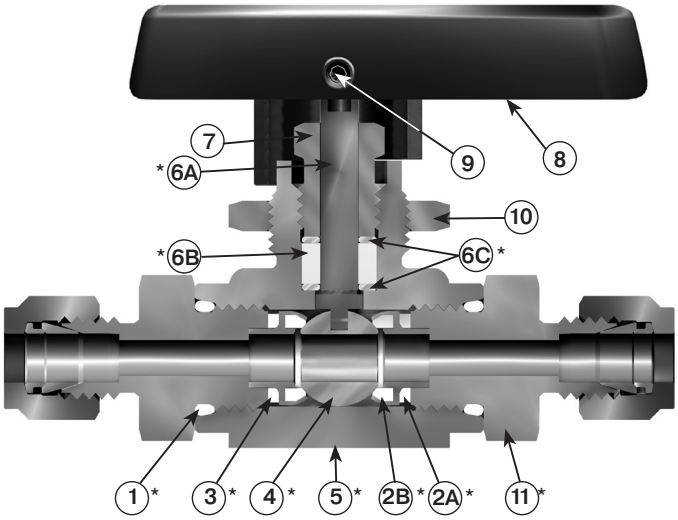

3-Way Valve: Model Shown: 4F-B6XS2-SSP

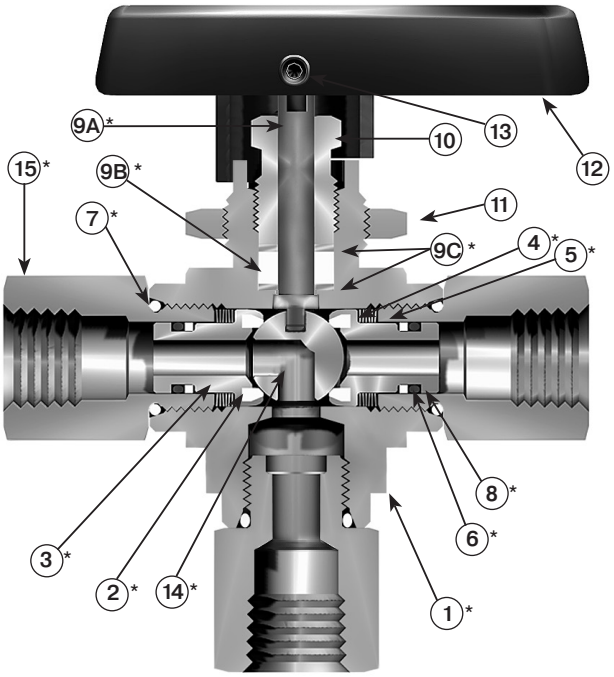

Item #	Part Description	Stainless Steel	Brass
*1	Connector O-Ring	PTFE**	
*2A	Seat Retainer	ASTM A 276 Type 316	ASTM B 16 Alloy C36000
*2B	Seat	PTFE, PCTFE, PEEK	
*3	Retainer Seal	PTFE**	
*4	Ball	316 Stainless Steel	
*5	Body	ASTM A 351 Grade CF3M	ASTM B 283 Alloy C37700
*6A	Stem	ASTM A 276 Type 316	
*6B	Stem Seal	PTFE**	
*6C	Stem Washer	316 Stainless Steel	
7	Packing Nut	ASTM A 479 Type 316	ASTM B 453 Alloy C34000
8	Handle	Nylon 6/6	
9	Handle Set Screw	Stainless Steel	
10	Panel Nut	316 Stainless Steel	
*11	End Connector	ASTM A 479 Type 316	ASTM B 16 Alloy C36000

* Wetted Parts.

** Optional stem seal and body seal materials are described in the How to Order section. Lubrication: Perfluorinated Polyether.

*** The lower stem washer material is PEEK for B8 Selector Valves. Lubrication: Perfluorinated polyether.

Item #	Part Description	Stainless Steel	Brass
1	Body	ASTM A 351 Grade CF3M	ASTM B 283 Alloy C37700
*2	Seat	PTFE, PEEK	
*3	Seat Retainer	ASTM A 276 Type 316	
4	Spring	Stainless Steel	
*5	Seat Retainer Washer	316 Stainless Steel	
*6	Back-up Ring	PTFE	
*7	Connector O-Ring	PTFE**	
*8	Seat Retainer O-Ring	Fluorocarbon Rubber**	
*9A	Stem	ASTM A 276 Type 316	
*9B	Stem Seal	PTFE*	
*9C	Stem Washer	316 Stainless Steel***	
10	Packing Nut	ASTM A 479 Type 316	ASTM B 453 Alloy C34000
11	Panel Nut	316 Stainless Steel	
12	Handle	Nylon 6/6	
13	Handle Set Screw	Stainless Steel	
*14	Ball	316 Stainless Steel	
*15	End Connector	ASTM A 479 Type 316	ASTM B 16 Alloy C36000

TOC

Dimensions & Flow Data

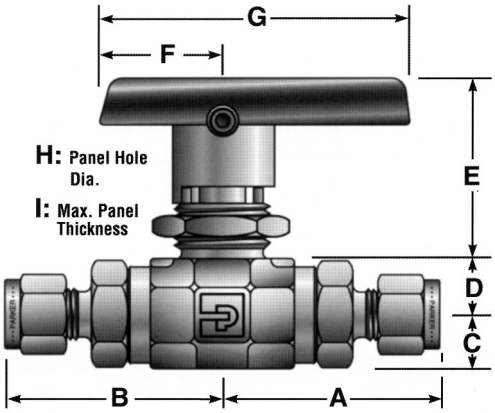

Model Shown: 4A-B6LJ-SSP

End Connections Port 1	End Connections Port 2	Port Size	Basic Part #	Flow Data Orifice Inch	Flow Data Orifice mm	Flow Data Cv	Flow Data X_T*	Dimensions Inches (mm) A†	B†	C	D	E	F	G	H	I
1/16" A-LOK®		1A	B2L	0.052	1.3	0.06	0.45	1.30 (33.0)	1.30 (33.0)	0.33 (8.4)	0.33 (8.4)	0.94 (23.9)	0.75 (19.1)	1.88 (47.8)	0.58 (14.7)	0.13 (3.3)
1/16" CPI™		1Z														
1/8" A-LOK®		2A		0.093	2.4	0.21	0.47	1.36 (34.5)	1.36 (34.5)							
1/8" CPI™		2Z														
1/8" Female NPT		2F		0.165	4.2	0.93	0.43	1.07 (27.2)	1.07 (27.2)							
1/8" Male NPT		2M		0.165	4.2	0.93	0.43	1.18 (30.0)	1.18 (30.0)							
1/4" A-LOK®		4A		0.165	4.2	0.93	0.43	1.48 (37.6)	1.48 (37.6)							
1/4" CPI™		4Z														
1/4" Male NPT		4M		0.165	4.2	0.93	0.43	1.35 (34.3)	1.35 (34.3)							
3mm A-LOK®		M3A		0.086	2.2	0.18	0.44	1.37 (34.8)	1.37 (34.8)							
3mm CPI™		M3Z														
1/4" A-LOK®		4A	B6L	0.187	4.7	1.04	0.42	1.74 (44.2)	1.74 (44.2)	0.42 (10.7)	0.47 (11.9)	1.53 (38.9)	1.00 (25.4)	2.50 (63.5)	0.77 (19.6)	0.25 (6.4)
1/4" CPI™		4Z														
1/4" Female NPT		4F		0.250	6.4	2.34	0.29	1.51 (38.4)	1.51 (38.4)							
1/4" Male NPT		4M		0.250	6.4	2.34	0.29	1.62 (41.1)	1.62 (41.1)							
1/4" UltraSeal		4Q		0.180	4.6	1.03	0.42	1.51 (38.4)	1.51 (38.4)							
1/4" VacuSeal		4V		0.188	4.8	1.04	0.42	1.75 (44.5)	1.75 (44.5)							
3/8" A-LOK®		6A		0.250	6.4	2.34	0.29	1.80 (45.7)	1.80 (45.7)							
3/8" CPI™		6Z														
3/8" Male NPT		6M		0.250	6.4	2.34	0.29	1.62 (41.1)	1.62 (41.1)							
3/8" UltraSeal		6Q		0.250	6.4	2.34	0.29	1.51 (38.4)	1.51 (38.4)							
6mm A-LOK®		M6A		0.187	4.7	1.04	0.42	1.75 (44.5)	1.75 (44.5)							
6mm CPI™		M6Z														
8mm A-LOK®		M8A		0.250	6.4	2.34	0.42	1.78 (45.2)	1.78 (45.2)							
8mm CPI™		M8Z														
10mm A-LOK®		M10A		0.250	6.4	2.34	0.42	1.81 (46.0)	1.81 (46.0)							
10mm CPI™		M10Z														
3/8" Female NPT		6F	B8L	0.406	10.3	6.42	0.37	1.95 (49.5)	1.95 (49.5)	0.69 (17.5)	0.70 (17.8)	1.74 (44.2)	1.50 (38.1)	4.00 (101.6)	0.90 (22.9)	0.38 (9.7)
1/2" Female NPT		8F		0.406	10.3	6.42	0.37	2.15 (54.6)	2.15 (54.6)							
1/2" A-LOK®		8A		0.406	10.3	6.42	0.37	2.34 (59.4)	2.34 (59.4)							
1/2" CPI™		8Z														
1/2" Male NPT		8M		0.406	10.3	6.42	0.37	2.22 (56.4)	2.22 (56.4)							
1/2" UltraSeal		8Q		0.375	9.5	5.57	0.37	1.92 (48.8)	1.92 (48.8)							
1/2" VacuSeal		8V		0.406	10.3	6.42	0.37	2.21 (56.1)	2.21 (56.1)							
3/4" A-LOK®		12A		0.406	10.3	6.42	0.37	2.33 (59.2)	2.33 (59.2)							
3/4" CPI™		12Z														
3/4" Female NPT		12F		0.406	10.3	6.42	0.37	2.25 (57.1)	2.25 (57.1)							
12mm A-LOK®		M12A		0.375	9.5	5.57	0.37	2.33 (59.2)	2.33 (59.2)							
12mm CPI™		M12Z														
16mm A-LOK®		M16A		0.406	10.3	6.42	0.37	2.33 (59.2)	2.33 (59.2)							
16mm CPI™		M16Z														

* Tested in accordance with ISA S75.02. Gas flow will be choked when $P_1 - P_2 / P_1 = x_T$.

† For CPI™ and A-LOK®, dimensions are measured with nuts in the finger tight position

Dimensions in inches/millimeters are for reference only, subject to change.

Dimensions & Flow Data

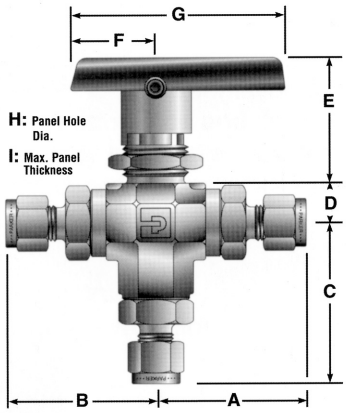

Model Shown: 4Z-B6XSPKR-V-SSP

End Connections	Port Size	Basic Part #	Flow Data				Dimensions Inches (mm)								
			Orifice		Cv	X_T*									
Port 1 Port 2 Port 3			Inch	mm			A†	B†	C	D	E	F	G	H	I
1/16" A-LOK®	1A	B2X	0.052	1.3	0.06	0.56	1.30 (33.0)	1.30 (33.0)	1.39 (35.3)	0.33 (8.4)	0.94 (23.9)	0.75 (19.1)	1.88 (47.8)	0.58 (14.7)	0.13 (3.3)
1/16" CPI™	1Z														
1/8" A-LOK®	2A		0.093	2.4	0.21	0.64	1.36 (34.5)	1.36 (34.5)	1.45 (36.8)						
1/8" CPI™	2Z														
1/8" Female NPT	2F		0.165	4.2	0.63	0.59	1.07 (27.2)	1.07 (27.2)	1.15 (29.2)						
1/8" Male NPT	2M		0.165	4.2	0.63	0.59	1.18 (30.0)	1.18 (30.0)	1.26 (32.0)						
1/4" A-LOK®	4A		0.165	4.2	0.63	0.59	1.48 (37.6)	1.48 (37.6)	1.56 (39.6)						
1/4" CPI™	4Z														
1/4" Male NPT	4M		0.165	4.2	0.63	0.59	1.35 (34.3)	1.35 (34.3)	1.43 (36.3)						
3mm A-LOK®	M3A		0.086	2.2	0.18	0.63	1.37 (34.8)	1.37 (34.8)	1.45 (36.8)						
3mm CPI™	M3Z														
1/4" A-LOK®	4A	B6X	0.187	4.7	0.70	0.69	1.74 (44.2)	1.74 (44.2)	1.88 (47.8)	0.47 (11.9)	1.53 (38.9)	1.00 (25.4)	2.50 (63.5)	0.77 (19.6)	0.25 (6.4)
1/4" CPI™	4Z														
1/4" Female NPT	4F		0.196	5.0	0.87	0.74	1.51 (38.4)	1.51 (38.4)	1.65 (41.9)						
1/4" Male NPT	4M		0.196	5.0	0.87	0.74	1.62 (41.1)	1.62 (41.1)	1.76 (44.7)						
1/4" UltraSeal	4Q		0.180	4.6	0.68	0.67	1.51 (31.8)	1.51 (31.8)	1.65 (33.8)						
1/4" VacuSeal	4V		0.188	4.8	0.70	0.69	1.75 (35.1)	1.75 (35.1)	1.89 (37.1)						
3/8" A-LOK®	6A		0.196	5.0	0.87	0.74	1.80 (45.7)	1.80 (45.7)	1.94 (49.3)						
3/8" CPI™	6Z														
3/8" Male NPT	6M		0.196	5.0	0.87	0.74	1.62 (41.1)	1.62 (41.1)	1.76 (44.7)						
3/8" UltraSeal	6Q		0.196	5.0	0.87	0.74	1.52 (38.6)	1.52 (38.6)	1.65 (41.9)						
6mm A-LOK®	M6A		0.187	4.7	0.70	0.69	1.75 (44.5)	1.75 (44.5)	1.88 (47.8)						
6mm CPI™	M6Z														
8mm A-LOK®	M8A		0.196	5.0	0.87	0.74	1.78 (45.2)	1.78 (45.2)	1.91 (48.5)						
8mm CPI™	M8Z														
10mm A-LOK®	M10A		0.196	5.0	0.87	0.74	1.81 (46.0)	1.81 (46.0)	1.95 (49.5)						
10mm CPI™	M10Z														
3/8" Female NPT	6F	B8X	0.406	10.3	3.62	0.64	1.95 (49.5)	1.95 (49.5)	2.29 (58.2)	0.70 (17.8)	1.74 (44.2)	1.50 (38.1)	4.00 (101.6)	0.90 (22.9)	0.38 (9.7)
1/2" A-LOK®	8A		0.406	10.3	3.62	0.64	2.34 (59.4)	2.34 (59.4)	2.68 (68.1)						
1/2" CPI™	8Z														
1/2" Female NPT	8F		0.406	10.3	3.62	0.64	2.15 (54.6)	2.15 (54.6)	2.49 (63.2)						
1/2" Male NPT	8M		0.406	10.3	3.62	0.64	2.22 (56.4)	2.22 (56.4)	2.59 (65.8)						
1/2" UltraSeal	8Q		0.375	9.5	3.46	0.62	1.93 (49.5)	1.93 (49.5)	2.27 (57.7)						
1/2" VacuSeal	8V		0.406	10.3	3.62	0.64	2.21 (56.1)	2.21 (56.1)	2.55 (65.0)						
3/4" A-LOK®	12A		0.406	10.3	3.62	0.64	2.33 (59.2)	2.33 (59.2)	2.68 (68.1)						
3/4" CPI™	12Z														
3/4" Female NPT	12F		0.406	10.3	6.42	0.37	2.25 (57.1)	2.25 (57.1)	2.59 (65.8)						
12mm A-LOK®	M12A		0.375	9.5	3.46	0.62	2.33 (59.2)	2.33 (59.2)	2.67 (67.8)						
12mm CPI™	M12Z														
16mm A-LOK®	M16A		0.406	10.3	3.62	0.64	2.33 (56.9)	2.33 (56.9)	2.67 (65.5)						
16mm CPI™	M16Z														

* Tested in accordance with ISA S75.02. Gas flow will be choked when $P_1 - P_2 / P_1 = x_T$.

† For CPI™ and A-LOK®, dimensions are measured with nuts in the finger tight position

Dimensions in inches/millimeters are for reference only, subject to change.

TOC

Pressure vs. Temperature

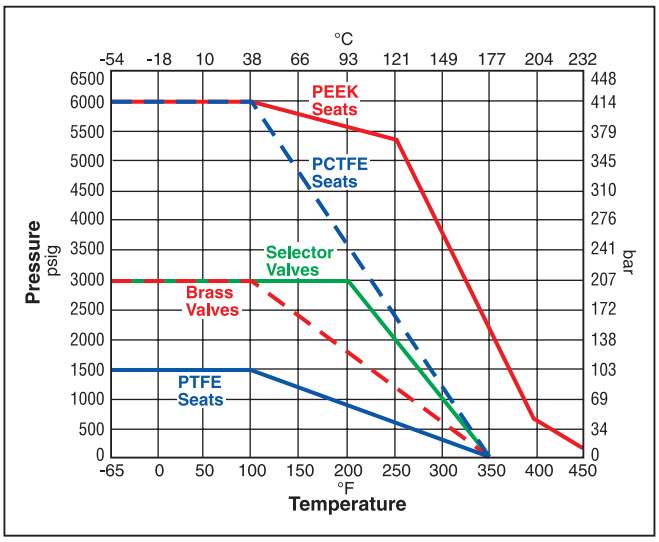

Note: To determine MPa, multiply bar by 0.1

Note:

This Pressure versus Temperature chart reflects the maximum temperature range of indicated materials.

When combining seat and seal materials, the most restrictive temperature rating of the seats or seals becomes the limiting factor on valve temperature range.

Elastomeric stem packing and seals are recommended if the application subjects the valve to thermal cycling.

Temperature Ratings:

PTFE.....-65°F to 350°F (-54°C to 177°C)

PCTFE .....-65°F to 350°F (-54°C to 177°C)

PEEK ..... -65°F to 450°F (-54°C to 232°C)

Nitrile Rubber.....-40°F to 250°F (-40°C to 121°C)

Fluorocarbon Rubber .....-15°F to 450°F (-26°C to 232°C)

Ethylene Propylene Rubber.....-65°F to 300°F (-54°C to 149°C)

Highly Fluorinated Fluorocarbon Rubber ..... -15°F to 200°F (-26°C to 93°C)

Flow Calculations with 1000 psig (69 bar) Inlet Pressure

2-Way Valve

Valve Series	Max. Cv	Pressure Drop ΔP		Water @ 60°F (16°C)		Air @ 60°F (16°C)	
		psig	bar	gpm	m^3/hr	scfm	m^3/hr
B2L	0.93	10	0.7	2.9	0.7	92.4	156.2
		50	3.5	6.6	1.5	200.3	338.3
		100	6.9	9.3	2.1	272.0	458.9
B6L	2.34	10	0.7	7.4	1.7	231.7	391.5
		50	3.5	16.5	3.8	494.2	834.7
		100	6.9	23.4	5.3	657.0	1107.9
B8L	6.42	10	0.7	20.3	4.6	637.1	1076.8
		50	3.5	45.4	10.3	1373.6	2320.3
		100	6.9	64.2	14.6	1852.3	3124.8

3-Way Valve

Valve Series	Max. Cv	Pressure Drop ΔP		Water @ 60°F (16°C)		Air @ 60°F (16°C)	
		psig	bar	gpm	m^3/hr	scfm	m^3/hr
B2X	0.63	10	0.7	2.0	0.5	62.7	106.0
		50	3.5	4.5	1.0	137.1	231.7
		100	6.9	6.3	1.4	188.4	317.9
B6X	0.87	10	0.7	2.8	0.6	86.7	146.6
		50	3.5	6.2	1.4	190.5	321.8
		100	6.9	8.7	2.0	263.2	444.4
B8X	3.62	10	0.7	11.5	2.6	360.6	609.5
		50	3.5	25.6	5.9	789.7	1343.5
		100	6.9	36.2	8.2	1087.4	1836.6

TOC

How to Order

Typical part number example: **4Z4F-B6LJ-SSP**

(Part number is created based on customer selection of product parameters, see below for example)

The above example describes a B6L ball valve with a 1/4" CPI™ end connection for port 1 and a 1/4" Female NPT end connection for port 2, PTFE seats, PTFE stem and body seals, 316 Stainless Steel construction, with a panel mounting nut.

Example:

4Z	4F		–	B6L	J	–	-	–	SSP
Port 1	Port 2	Port 3		Valve Series	Seat Material		Seal Material		Body Material

Ports 1, 2 and 3		Valve Series	Seat Material		Seal Material		Body Material
1A	1/16" A-LOK®	B2L	J	PTFE	**(Blank) PTFE**		**SSP 316 Stainless Steel**
1Z	1/16" CPI™	B2X	J2	PCTFE	V	Fluorocarbon Rubber	MP Monel® Alloy 400
2A	1/8" A-LOK®				EPR	Ethylene Propylene Rubber	HCP Hastelloy® C-276
2Z	1/8" CPI™				BN	Nitrile Rubber	BP Brass
2F	1/8" Female NPT				KZ	Highly Fluorinated Fluorocarbon Rubber	
2M	1/8" Male NPT				LT	Live-Loaded PTFE Packing with PTFE Seals	
4A	1/4" A-LOK®				VLT	Live-Loaded PTFE Packing with Fluoro carbon Rubber Seals	
4Z	1/4" CPI™				EPRLT	Live-Loaded PTFE Packing with Ethylene Propylene Rubber Seals	
4M	1/4" Male NPT				BNLT	Live-Loaded PTFE Packing with Nitrile Rubber Seals	
M3A	3mm A-LOK				KZLT	Live-Loaded PTFE Packing with Highly Flourinated Fluoro-carbon Rubber Seals	
M3Z	3mm CPI™						
4A	1/4" A-LOK®	**B6L**	**J**	**PTFE**			
4Z	**1/4" CPI™**	B6X	J2	PCTFE			
4F	**1/4" Female NPT**		S2	Spring-Loaded PCTFE			
4M	1/4" Male NPT		PKR	PTFE Lubricated PEEK			
4Q	1/4" UltraSeal		SPKR	Spring-Loaded PTFE Lubricated PEEK			
4V	1/4" VacuSeal						
6A	3/8" A-LOK®						
6Z	3/8" CPI™						
6M	3/8" Male NPT						
6Q	3/8" UltraSeal						
M6A	6mm A-LOK®						
M6Z	6mm CPI™						
M8A	8mm A-LOK®						
M8Z	8mm CPI™						
M10A	10mm A-LOK®						
M10Z	10mm CPI™						
6F	3/8" Female NPT	B8L	J	PTFE			
8A	1/2" A-LOK®	B8X	J2	PCTFE			
8Z	1/2" CPI™		S2	Spring-Loaded PCTFE			
8F	1/2" Female NPT		PKR	PTFE Lubricated PEEK			
8M	1/2" Male NPT		SPKR	Spring-Loaded PTFE Lubricated PEEK			
8Q	1/2" UltraSeal						
8V	1/2" VacuSeal						
12Z	3/4" CPI™						
12F	3/4" Female NPT						
M12A	12mm A-LOK®						
M12Z	12mm CPI™						
M16A	16mm A-LOK®						
M16Z	16mm CPI™						

Notes:
1. Panel Mounting Nut supplied with each valve. Various port combinations are available.
2. 12F (3/4" Female NPT) not panel mountable.

NOTE-Additional end connections sizes may be available upon request.

TOC

Handle Options

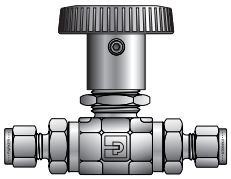

Round Handle

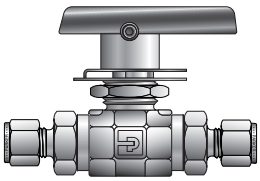

Lock-Out Handle

Actuator Options

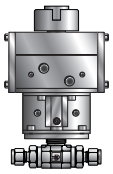

Double Acting (AD61) Pneumatic Actuator

Spring Returns (AC61 & AO61) Pneumatic Actuator

70, 80 & 90 Series Electric Actuator

Seal Options

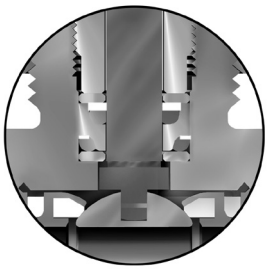

O-Ring Stem Seals

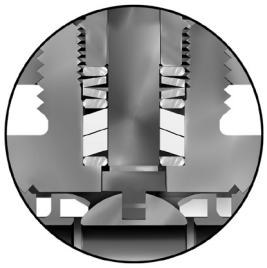

Live-Loaded Stem Seals

Two-Way Valve Upstream and Downstream Drain Options

For draining upstream or downstream media on 2-way valves at pressures below 150 psig (10 bar), add the suffix **–VBU** (Vented Ball Upstream) or **–VBD** (Vented Ball Downstream). ***Example: 4Z-B6LJ-SSP-VBU***. This option is also suitable to vent the ball cavity.

For pressures up to 3,000 psig (207 bar), select **S2** or **SPKR** spring-loaded seats and add the suffix **–VBU** (Vented Ball Upstream) or **–VBD** (Vented Ball Downstream). ***Example: 4Z-B6LS2-SSP-VBU***

Note: VBD and VBU are ball cavity vents only.

TOC

How to Order Options

	Example
Lock-out Devices Add the suffix **-LD** to the end of the part number to order directly on the valve. For field installation, simply substitute the correct valve series number after LD.	4F-B6LJ2-BN-SSP-LD **LD-B8L**
Colored Lever Handles: Add the designator corresponding to the correct handle as a suffix to the part number (black is standard). W = white, B = blue, **G** = green, R = red, Y = yellow.	M6A-B6XPKR-SSP-**G**
Colored Round Handles: Add the designator corresponding to the correct handle as a suffix to the part number. S = Black, S-W = white, S-B = blue, **S-G** = green, S-R = red, S-Y = yellow. NOTE: Round handles are not recommended for B8 valves with PEEK seats.	M6A-B6XPKR-SSP-**S-G**
Metal Oval Handles: Add the designator corresponding to the correct handle as a suffix to the valve part number. **OVSS** = stainless steel, SA = oval aluminum. NOTE: Not available in size 2.	8F-B8LPKR-SSP-**OVSS**
Stainless Steel Handles: Add the suffix **-ST** to the end of the part number (B6 and B8 only).	4F-B6LJ-SSP-**ST**
Pneumatic Actuators: For detailed actuator information, refer to the Pneumatic Actuators section of this catalog. For factory assembly, add the actuator part number as the suffix to the valve part number. For field installation, specify the actuator desired. The appropriate mounting hardware may be obtained by adding the valve series and actuator size to the prefix **MK-**.	2F-B2XJ2-V-SS-**ACX62** ACX62 **MK**-B8L-61
Electric Actuators: For detailed actuator information refer to the Electric Actuators section of this catalog. For factory assembly, add the actuator part number as the suffix to the valve part number. For field installation, specify the actuator desired. The appropriate mounting hardware may be obtained by adding the valve series and actuator series to the prefix **MK-**.	8A-B8LPKR-BN-SS-**71A** 71A **MK-**B8L-70
Oxygen Cleaning: Add the suffix **-C3** to the end of the part number to receive valves cleaned and asembled for oxygen service in accordance with Parker Specification ES8003.	4A-B6LJ-EPR-SSP-**C3**
Ground Spring: Spring: To obtain B6 and B8 series valves with a grounding spring, add the suffix **-SPG** to the end of the part number.	8A-B8LJ2-SSP-**SPG**

TOC

How to Order Maintenance Kits

How to Order Maintenance Kits	Example
Lock-Out Devices: For field installation, simply substitute the correct valve series number after LD.	LD-B8L
Stainless Steel Oval Handles: NOTE: Not available in size 2.	B8-OVAL-SS-HANDLE-ASSY
Colored Round Handle Kits: Series-Handle-Color. (Example consists of a green handle and handle screw.) NOTE: Round handles are not recommended for B8 valves with PEEK seats.	B6-RD-HANDLE-GREEN
Stainless Steel Handle Kits: Series-Handle-SS. (Example consists of a stainless steel handle and handle screw.)	B8-HANDLE-SS
Colored Lever Handle Kits: Series-Handle-Color. Black is standard. B = Blue, G = Green, R = Red (Example consists of a red handle and handle screw.)	B6-HANDLE-RED
2-way Valve Seal Kits: PTFE Stem Seal Kits: Kit-Valve Series and Seat Material-Body Material. (Consists of one PTFE stem seal, two stem seal washers, two encapsulated PTFE ball seats, two end connector PTFE seals, one assembly mandrel, maintenance instructions.)	KIT-B2LJ-SS
Elastomeric Stem Seal Kits: Kit-Valve Series and Seat Material-Elastomer Material-Body Material. (Consists of two stem seal Nitrile rubber O-rings, two PTFE back-up rings, two stem seal washers, two encapsulated PCTFE ball seats, two end connector Nitrile rubber O-ring seals, two seat retainer Nitrile rubber O-ring seals, stem glands and maintenance instructions.)	KIT-B2LJ2-BN-SS
Diverter Valve Seal Kits: PTFE Stem Seal Kits: Kit-Valve Series and Seat Material-Body Material. (Consists of one PTFE stem seal, two stem seal washers, two encapsulated PEEK ball seats, three end connector PTFE seals, one assembly mandrel, maintenance instructions.)	KIT-B6XPKR-SS
Elastomeric Stem Seal Kits: Kit-Valve Series and Seat Material-Elastomer-Body Material. (Consists of two stem seal fluorocarbon rubber O-rings, two PTFE back-up rings, two stem seal washers, two encapsulated PTFE ball seats, three end connector fluorocarbon rubber O-ring seals, two seat retainer fluorocarbon rubber O-ring seals, stem glands and maintenance instructions.)	KIT-B6XJ-V-SS
Selector Valve Seal Kits: PTFE Stem Seal Kits: Kit-Valve Series and Seat Material. (Consists of one PTFE stem seal, two stem seal washers, two encapsulated spring-loaded PCTFE ball seats, two seat retainer fluorocarbon rubber O-rings, three end connector PTFE seals, one assembly mandrel, maintenance instructions.)	KIT-B6XS2-SS
Elastomeric Stem Seal Kits: Kit-Valve Series and Seat Material-Elastomer. (Consists of two stem seal fluorocarbon rubber O-rings, two PTFE back-up rings, two stem seal washers, two encapsulated spring-loaded PEEK ball seat assemblies, three end connector fluorocarbon O-ring seals, two seat retainer fluorocarbon rubber O-rings, stem glands and maintenance instructions.)	KIT-B6XSPKR-V-SS
Live-Loaded Seal Kits: Kit-Valve Series and Seat Material-Seal Material-Body Material. (Consists of one live-loaded PTFE stem packing, two packing springs (B8 series valves have four springs), three packing washers, two PCTFE encapsulated ball seats, two Nitrile rubber end connector O-ring seals, two Nitrile rubber seat retainer O-ring seals, maintenance instructions.)	KIT-B6LJ2-BNLT-SS

NOTES

TOC

PR Series Rotary Plug Valves

TOC

Parker **PR Series Plug Valves** provide positive leak tight shut-off, high flow capacity, and quick quarter-turn operation in a compact attractive package. The patented blow-out resistant seat design offers reliable sealing technology at all operating pressures. In addition to on-off actuation, the plug design allows forward flow throttling.

A selection of valve seat and seal materials may be chosen for media compatibility and performance over a broad range of temperatures. The pressure balanced atmospheric seals are backed by PTFE rings to enhance their performance and increase cycle life.

Features

- Patented blow-out resistant seat design
- Pressures up to 3,000 psig (207 bar) CWP
- Quarter-turn operation
- Reliable simple design
- Straight-through flow
- Stainless steel and brass construction
- Nitrile, ethylene propylene, fluorocarbon, and highly fluorinated fluorocarbon rubber seats and seals
- PTFE back-up rings on atmospheric seals
- Low operating torque
- Minimum pressure drop
- Throttling capability
- Positive handle stops
- Color coded fracture resistant nylon handles with directional flow indication
- Easy to service
- 100% factory tested
- Options include lock-out devices, downstream venting, and both stainless steel and T-bar handles

Specifications

Pressure Rating	3,000 psig (207 bar) CWP
Reverse Flow Direction	150 psig (10 bar)
Downstream Vent Direction	150 psig (10 bar)

Open

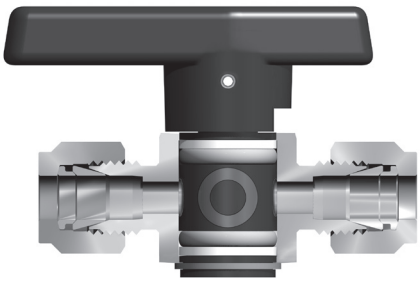

Closed

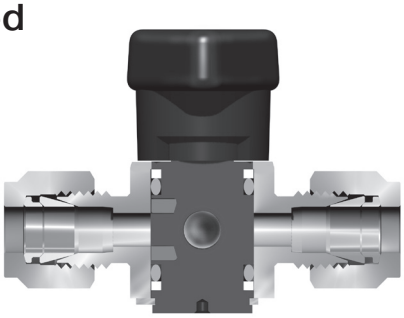

Model Shown: 4A-PR4-VT-SS

U.S. Patent 5,234,193

Materials of Construction

Item #	Part Description	Stainless Steel	Brass
1	Body	ASTM A 479 Type 316	ASTM B 16 Alloy C36000
2	Plug*	ASTM A 479 Type 316	ASTM B 16 Alloy C36000
3	Seat**	Fluorocarbon Rubber	
4	O-Ring Seals**	Fluorocarbon Rubber	
5	Back-up Rings	PTFE	
6	Handle	Nylon 6/6	
7	Handle Pin	316 Stainless Steel	
8	Body Pin	316 Stainless Steel (not shown)	
9	Retaining Ring	316 Stainless Steel	

* Plugs are PTFE color coated - Stainless steel plugs are black; Brass plugs are green.

**Optional Seat and O-ring seal materials are available.

Lubrication: Perfluorinated polyether

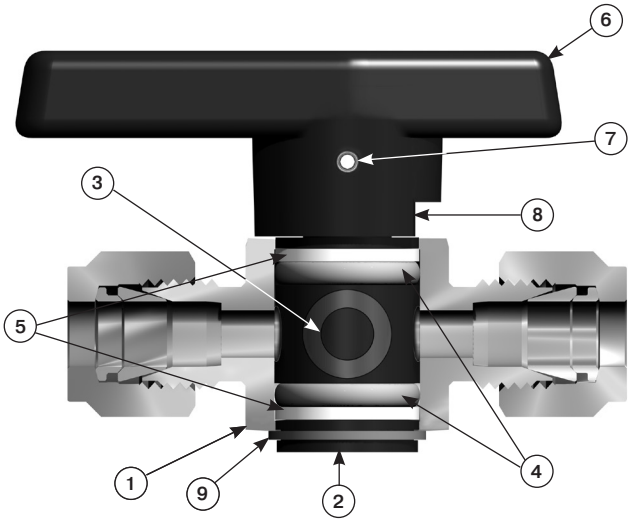

Model Shown: 4A-PR4-VT-SS

Pressure vs. Temperature Ratings

Material	Temperature Rating
Nitrile Rubber	-30°F to 225°F (-34°C to 107°C)
Fluorocarbon Rubber	-10°F to 450°F (-23°C to 232°C)
Highly Fluorinated Fluorocarbon Rubber	-10°F to 300°F (-23°C to 149°C)
Ethylene Propylene Rubber	-70°F to 275°F (-57°C to 135°C)

Note: This Pressure versus Temperature chart reflects the maximum temperature range of indicated body materials.

The temperature rating of the elastomer seals become the limiting factor on temperature range.

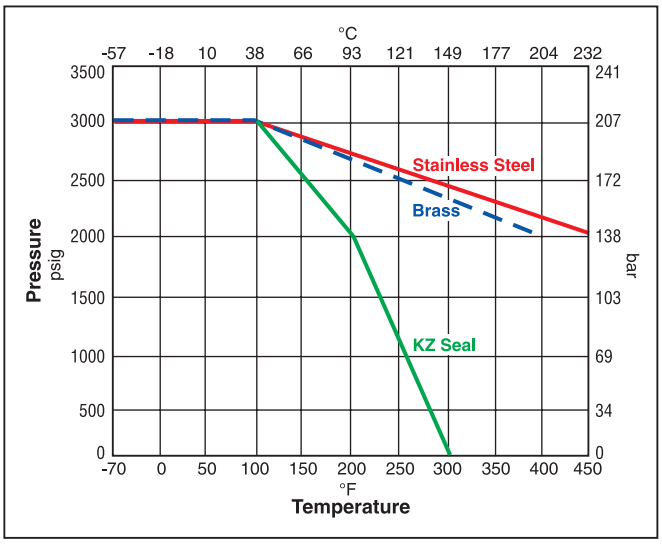

TOC

Flow Data / Dimensions

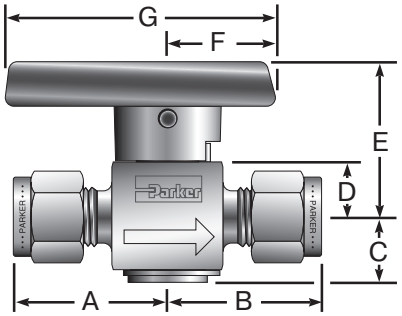

Model Shown: 4A-PR4-VT-B

End Connections Port 1 / Port 2	Port Size	Basic Part #	Flow Data Orifice Inch	Flow Data Orifice mm	Flow Data Cv	Flow Data X_T *	Dimensions Inches (mm) A†	B†	C	D	E	F	G
1/8" Female NPT	2F	PR4	0.193	4.9	1.24	0.39	0.89 (22.6)	0.89 (22.6)	0.46 (11.7)	0.38 (9.7)	1.07 (27.2)	0.75 (19.1)	1.88 (47.8)
1/8" Male NPT	2M		0.172	4.4	1.02	0.39	0.77 (19.6)	0.77 (19.6)					
1/8" A-LOK®	2A		0.093	2.4	0.22	0.48	1.00 (25.4)	1.00 (25.4)					
1/8" CPI™	2Z												
1/4" Female NPT	4F		0.193	4.9	1.24	0.39	1.05 (26.7)	1.05 (26.7)					
1/4" Male NPT	4M		0.193	4.9	1.24	0.39	0.96 (24.4)	0.96 (24.4)					
1/4" A-LOK®	4A		0.187	4.7	1.18	0.41	1.09 (27.7)	1.09 (27.7)					
1/4" CPI™	4Z												
1/4" UltraSeal	4Q		0.187	4.7	1.18	0.41	0.85 (21.7)	0.85 (21.7)					
1/4" VacuSeal	4V		0.187	4.7	1.18	0.41	1.02 (25.9)	1.02 (25.9)					
3/8" Male NPT	6M		0.193	4.9	1.24	0.39	0.94 (23.9)	0.94 (23.9)					
3/8" A-LOK®	6A		0.193	4.9	1.24	0.39	1.14 (29.0)	1.14 (29.0)					
3/8" CPI™	6Z												
3mm A-LOK®	M3A		0.086	2.2	0.15	0.48	0.98 (24.9)	0.98 (24.9)					
3mm CPI™	M3Z												
6mm A-LOK®	M6A		0.188	4.8	1.18	0.41	1.08 (27.4)	1.08 (27.4)					
6mm CPI™	M6Z												
8mm A-LOK®	M8A		0.193	4.9	1.24	0.48	1.11 (28.2)	1.11 (28.2)					
8mm CPI™	M8Z												
1/4" Female NPT	4F	PR6	0.281	7.1	3.19	0.28	1.19 (30.2)	1.19 (30.2)	0.67 (17.0)	0.56 (14.2)	1.49 (37.8)	0.99 (25.1)	2.40 (61.0)
3/8" A-LOK®	6A		0.281	7.1	3.19	0.28	1.33 (33.8)	1.33 (33.8)					
3/8" CPI™	6Z												
1/2" Female NPT	8F		0.281	7.1	3.19	0.28	1.44 (36.6)	1.44 (36.6)					
1/2" Male NPT	8M		0.281	7.1	3.19	0.28	1.32 (33.5)	1.32 (33.5)					
1/2" A-LOK®	8A		0.281	7.1	3.19	0.28	1.44 (36.6)	1.44 (36.6)					
1/2" CPI™	8Z												
8mm A-LOK®	M8A		0.250	6.4	2.84	0.29	1.30 (33.0)	1.30 (33.0)					
8mm CPI™	M8Z												
10mm A-LOK®	M10A		0.281	7.1	3.19	0.28	1.34 (34.0)	1.34 (34.0)					
10mm CPI™	M10Z												
12mm A-LOK®	M12A		0.281	7.1	3.19	0.28	1.47 (37.3)	1.47 (37.3)					
12mm CPI™	M12Z												

* Tested in accordance with ISA S75.02. Gas flow will be choked when $P_1 - P_2 / P_1 = x_T$.
† For CPI™ and A-LOK®, dimensions are measured with nuts in the finger tight position.

TOC

Flow Calculations with 1000 psig (69 bar) Inlet Pressure

Valve Series	Max. C_V	Pressure Drop ΔP		Water @ 60°F (16°C)		Air @ 60°F (16°C)	
		psig	bar	gpm	m^3/hr	scfm	m^3/hr
PR4	1.24	10	0.7	3.9	0.9	123.1	209.6
		50	3.4	8.8	2.0	265.9	446.3
		100	6.9	12.4	2.8	359.6	607.0
PR6	3.19	10	0.7	10.1	2.3	315.7	533.5
		50	3.4	22.6	5.1	672.3	1128.2
		100	6.9	31.9	7.2	891.6	1504.1

Kits

Plug Kits – Specify the combination of valve series, seal material, plug material, and handle color (if applicable). **Example:** ***KIT-PR4-VT-SS-R***. This kit consists of a PR4 stainless steel plug with fluorocarbon rubber seat and seal elastomers, PTFE back-up rings, red handle, and handle pin.

Seal Kits – Specify the combination of valve series and seal material.
Example: ***KIT-PR4-BN***. This kit consists of a PR4 Nitrile rubber seat and seal elastomers and PTFE back-up rings.

Options

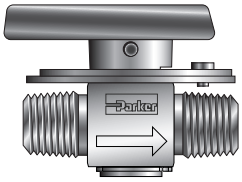

Lock-Out Device

Used to lock the handle from accidental rotation in either the opened or closed position. To order the device separately, specify **LD-PR4** or **LD-PR6**.

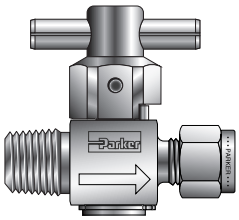

T-Bar Handle

An all metal bar stock design for higher strength and durability. Consists of a stainless steel pin and aluminum adapter. To order, add the suffix **–T** to the end of the part number.
Example and model shown: ***4M4A-PR4-EPRT-SS-T***.

Downstream Venting – As the valve is positioned from opened to closed, downstream pressure is released to atmosphere through a vent hole in the body and plug. The maximum recommended operating pressure for this option is 150 psig (10 bar). To order, insert **V** after **PR** in the model number. Example: ***4A-PRV4-VT-B***

Colored Handles – Black is the standard color. Add the designator corresponding to the correct handle color as a suffix to the part number: **B** – blue, **G** – green, **R** – red. Example: ***M6A-PR4-BNT-SS-G***

TOC

How to Order

Typical part number example: **4Z-PR4-BNT-SS.** Part number is created based on customer selection of product parameters, see below for example ***Note:** If the inlet and outlet ports are the same, eliminate the outlet port designator.

The following example describes a PR Series rotary plug valve equipped with 1/4" CPI™ compression inlet and outlet ports, Nitrile seals, PTFE back-up rings, and stainless steel construction.

Example:

4Z		–	PR4	–	BN	T	–	SS
Inlet Port*	Outlet Port*		Valve Series		Seal Material	Back-Up Rings		Body Material

Inlet and Outlet Ports*	Valve Series	Seal Material	Back-Up Rings	Body Material
2A 1/8" A-LOK® 2Z 1/8" CPI™ 2F 1/8" Female NPT 2M 1/8" Male NPT 4A 1/4" A-LOK® **4Z 1/4" CPI™** 4F 1/4" Female NPT 4M 1/4" Male NPT 4Q 1/4" UltraSeal 4V 1/4" VacuSeal 6M 3/8" Male NPT 6A 3/8" A-LOK® 6Z 3/8" CPI™ M3A 3mm A-LOK® M3Z 3mm CPI™ M6A 6mm A-LOK® M6Z 6mm CPI™ M8A 8mm A-LOK® M8Z 8mm CPI™	**PR4**	V Fluorocarbon Rubber KZ Highly Fluorinated Fluorocarbon Rubber EPR Ethylene Propylene Rubber **BN Nitrile Rubber**	**T PTFE**	**SS Stainless Steel** B Brass
4F 1/4" Female NPT 6A 3/8" A-LOK® 6Z 3/8" CPI™ 8A 1/2" A-LOK® 8Z 1/2" CPI™ 8F 1/2" Female NPT 8M 1/2" Male NPT M8A 8mm A-LOK® M8Z 8mm CPI™ M10A 10mm A-LOK® M10Z 10mm CPI™ M12A 12mm A-LOK® M12Z 12mm CPI™	**PR6**	V Fluorocarbon Rubber EPR Ethylene Propylene Rubber BN Nitrile Rubber		

Options

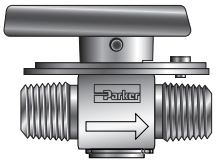

Lock-Out Device

Used to lock the handle from accidental rotation in either the opened or closed position. To order the device with the valve, add the suffix **–LD** to the end of the part number.
Example and model shown: 4F-PR4-VT-B-LD.
To order the device separately, specify LD-PR4 or LD-PR6.

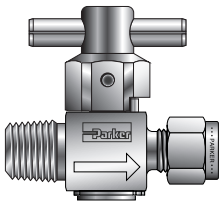

T-Bar Handle

An all metal bar stock design for higher strength and durability. Consists of a stainless steel pin and aluminum adapter. To order, add the suffix **–T** to the end of the part number.
Example and model shown: 4M4A-PR4-EPRT-SS-T.

Downstream Venting – As the valve is positioned from opened to closed, downstream pressure is released to atmosphere through a vent hole in the body and plug. The maximum recommended operating pressure for this option is 150 psig (10 bar). To order, insert V after PR in the model number. Example: 4A-PRV4-VT-B

Colored Handles – Black is the standard color. Add the designator corresponding to the correct handle color as a suffix to the part number: W – white, B – blue, G – green, R – red, Y – yellow. Example: M6A-PR4-BNT-SS-G

Stainless Steel Directional Handles – A stainless steel handle with the same design configuration as the standard nylon handle is available for the PR4 series. Add the designator –ST as a suffix to the part number.
Example: 4Q-PR4-EPRT-SS-ST

NOTES

TOC

MB Series Ball Valves

TOC

Parker **MB Series Ball Valves,** with their rugged compact design, offer positive shut off or directional control of fluids in process, power and instrumentation applications. The unique one piece seat/packing design insures excellent sealing characteristics while accommodating a superior temperature range and cycle life.

These valves are available in two-way and three-way configurations, brass and stainless steel construction, with a wide variety of port connections. Also, all ports are suitable as inlets to full operating pressure of the valve.

Features

- One piece seat/packing design
- Broad temperature range
- Coated metal inserts
- One piece stem/ball
- Wide variety of US Customary and SI ports
- Panel mountable to 1/4” thickness
- Bi-directional flow
- Handle indicates direction of flow
- Full operating pressure at any port
- Positive handle stops
- Color coded handles
- 100% factory tested
- Vent option
- Manual, electric or pneumatic actuation
- Leak-tight center-off position on three-way valves

Specifications

Pressure Rating	3000 psig* (207 bar) CWP - MB6 2500 psig* (172 bar) CWP - MB2/MB4/MB8
Temperature Rating	-65˚F to 300˚F (-54˚C to 149˚C)
Orifice	.052" to .406" (1.3mm to 10.3mm)
C_V	.05 to 6.96
Body Materials	Stainless steel and brass
Body Configurations	2-way (in-line and angle) 3-way, 4-way and 5-way
Port Connections	Tube compression (CPI™ / A-LOK®) NPT (Male / Female) BSP, VacuSeal and UltraSeal
Port Size	1/16" to 3/4" and 3mm to 12mm
Seat/Packing	PFA-Perfluoroalkoxy

* Preset from factory to 1000 psig (69 bar) bubble tight service. To achieve higher pressures packing nut must be tightened with Packing Tool MB6X5. Additional details are in INI-243 Installation Instructions. Packing in vented MB Series Ball Valves is factory adjusted for the maximum valve pressure rating of 500 psig (34 bar).

Materials of Construction

Item #	Part Description	Stainless Steel	Brass
1	Body	ASTM A 276 Type 316	ASTM B 16 Alloy C36000
2	Stem	ASTM A 276 Type 316	
3	Hollow Insert	316 Stainless Steel	
4	Packing Washer	ASTM B 16 Alloy C36000	
5	Packing Nut	ASTM A 479 Type 316	ASTM B 16 Alloy C36000
6	Solid Insert	316 Stainless Steel	
7	Handle	Nylon 6/6	
8	Set Screw	Stainless Steel	
9	Panel Nut	316 Stainless Steel**	
*10	Seat/Packing	Perfluoroalkoxy (PFA)	
11	Packing Ring	ASTM A 479 Type 316	

* Wetted Parts
** Nickel Plated Brass for MB8
Lubrication: Perfluorinated polyether

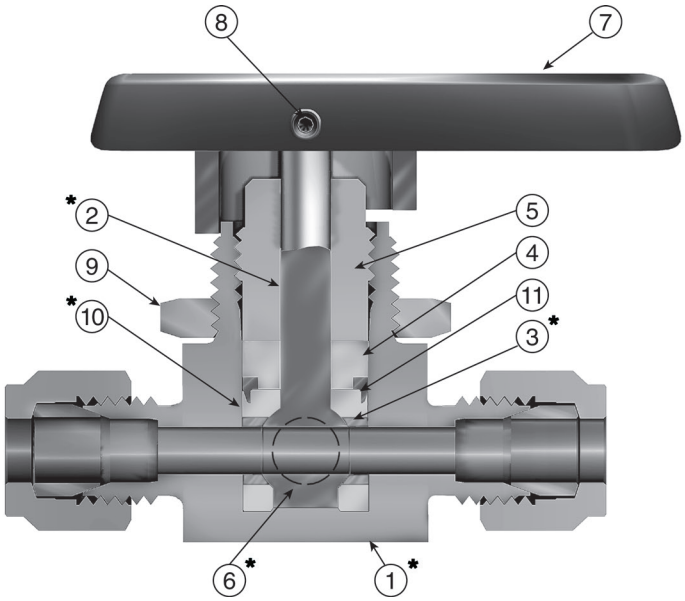

Pressure vs. Temperature

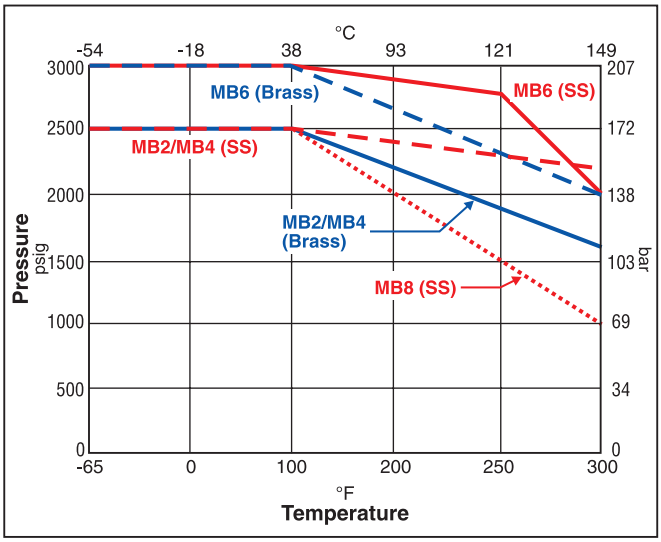

Note: To determine MPa, multiply bar by 0.1

TOC

Dimensions & Flow Data - 2-Way Inline Ball Valve

Two-Way In-Line

Vented – In off position the downstream port vents to atmosphere through a hole in the side of the body.

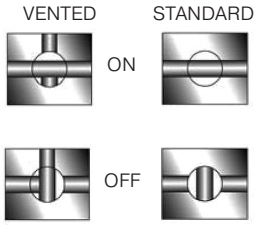

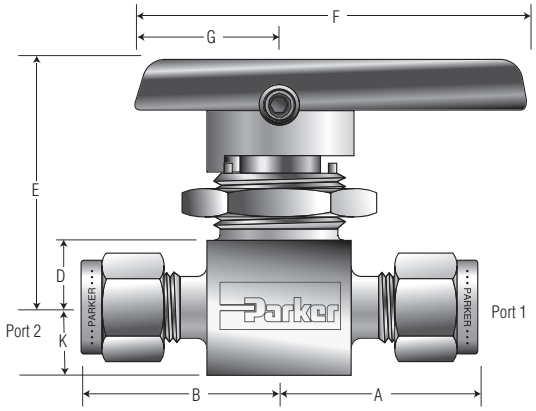

Model shown: 4A-MB6LPFA-SSP

End Connections Port 1 / Port 2	Port Size	Basic Part #	Flow Data Orifice Inch	Orifice mm	Cv	X_T*	Dimensions Inches (mm) A†	B†	D	E	F	G	H	I	J	K
1/16" CPI™	1Z	MB2L	0.052	1.3	0.03	0.46	0.84 (21.3)	0.84 (21.3)	0.34 (8.6)	1.31 (33.3)	1.88 (47.8)	0.75 (19.1)	0.25 (6.4)	0.58 (14.7)	0.58 (14.7)	0.28 (7.1)
1/16" A-LOK®	1A															
1/8" CPI™	2Z		0.093	2.4	0.20	0.42	1.00 (25.4)	1.00 (25.4)								
1/8" A-LOK®	2A															
3mm CPI™	M3Z		0.086	2.2	0.17	0.43	1.00 (25.4)	1.00 (25.4)								
3mm A-LOK®	M3A															
1/8" Female NPT	2F	MB4L	0.125	3.2	0.44	0.34	0.81 (20.6)	0.81 (20.6)	0.34 (8.6)	1.31 (33.3)	1.88 (47.8)	0.75 (19.1)	0.25 (6.4)	0.58 (14.7)	0.58 (14.7)	0.28 (7.1)
1/4" CPI™	4Z						1.12 (28.5)	1.12 (28.5)								
1/4" A-LOK®	4A															
6mm CPI™	M6Z						1.12 (28.5)	1.12 (28.5)								
6mm A-LOK®	M6A															
1/8" CPI™	2Z	MB6L	0.093	2.4	0.18	0.55	1.09 (27.7)	1.09 (27.7)	0.44 (11.2)	1.56 (39.6)	2.37 (60.2)	0.88 (22.4)	0.25 (6.4)	0.77 (19.6)	0.80 (20.3)	0.38 (9.7)
1/8" A-LOK®	2A															
1/8" Female NPT	2F		0.187	4.7	1.02	0.53	1.00 (25.4)	1.00 (25.4)								
1/4" Male NPT	4M						1.00 (25.4)	1.00 (25.4)								
1/4" CPI™	4Z						1.19 (30.2)	1.19 (30.2)								
1/4" A-LOK®	4A															
1/4" Female NPT	4F						1.03 (26.2)	1.03 (26.2)								
1/4" Male NPT - 1/4" CPI™	4M4Z						1.00 (25.4)	1.19 (30.2)								
1/4" Male NPT - 1/4" A-LOK®	4M4A															
1/4" VacuSeal	4V						1.03 (26.2)	1.03 (26.2)								
3/8" CPI™	6Z						1.31 (33.3)	1.31 (33.3)								
3/8" A-LOK®	6A															
6mm CPI™	M6Z						1.19 (30.2)	1.19 (30.2)								
6mm A-LOK®	M6A															
8mm CPI™	M8Z						1.22 (31.0)	1.22 (31.0)								
8mm A-LOK®	M8A															
1/2" A-LOK®	8A	MB8L	0.406	10.3	10.7	0.16	1.94 (49.3)	1.94 (49.3)	0.69 (17.5)	2.39 (60.7)	4.50 (114.3)	1.50 (38.1)	0.38 (9.7)	1.50 (38.1)	1.50 (38.1)	0.69 (17.5)
1/2" A-CPI™	8Z															
1/2" FNPT	8F		0.406	10.3	6.1	0.20	1.56 (39.6)	1.56 (39.6)								
3/4" A-LOK®	12A		0.406	10.3	6.4	0.19	1.94 (49.3)	1.94 (49.3)								
3/4" CPI™	12Z															
12mm A-LOK®	M12A		0.375	9.5	10.7	0.16	1.96 (49.8)	1.96 (49.8)								
12mm CPI™	M12Z															

* Tested in accordance with ISA S75.02. Gas flow will be choked when $P_1 - P_2 / P_1 = x_T$.
† For CPI™ and A-LOK®, dimensions are measured with nuts in the finger tight position.

TOC

Dimensions & Flow Data - 2-Way Angle Ball Valve and 3-Way Ball Valve

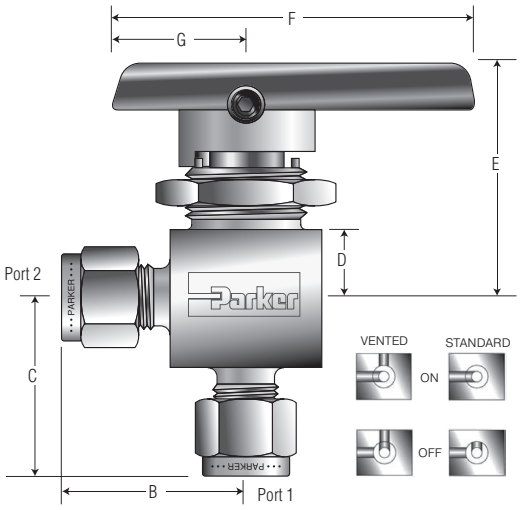

Model shown: 4A-MB6APFA-SSP

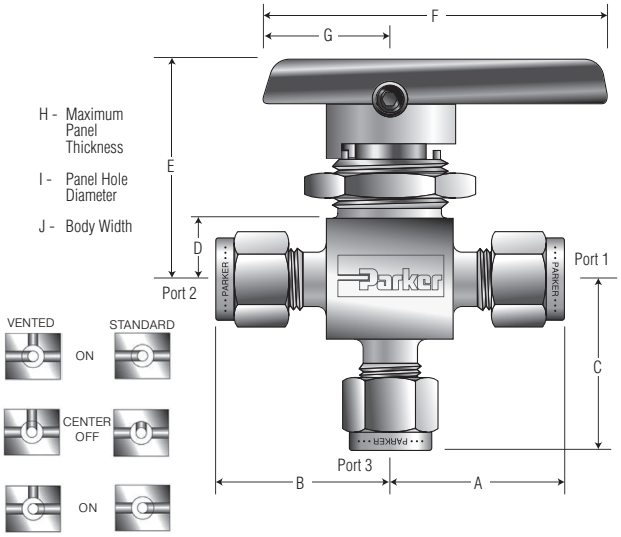

Model shown: 4A-MB6XPFA-SSP

End Connections			Port Size	Basic Part #	Flow Data				Dimensions Inches (mm)									
					Orifice		Cv	X_T*										
Port 1	Port 2	Port 3 ‡			Inch	mm			A†	B†	C	C	E	F	G	H	I	J
1/16" CPI™			1Z	MB2A MB2X	0.052	1.3	0.02	0.58	0.84 (21.3)	0.84 (21.3)	0.81 (20.6)	0.34 (8.6)	1.31 (33.3)	1.88 (47.8)	0.75 (19.1)	0.25 (6.4)	0.58 (14.7)	0.58 (14.7)
1/16" A-LOK®			1A															
1/8" CPI™			2Z		0.093	2.4	0.18	0.48	1.00 (25.4)	1.00 (25.4)	0.97 (24.6)							
1/8" A-LOK®			2A															
3mm CPI™			M3Z		0.086	2.2	0.15	0.47	1.00 (25.4)	1.00 (25.4)	0.97 (24.6)							
3mm A-LOK®			M3A															
1/8" Female NPT			2F	MB4A MB4X	0.125	3.2	0.34	0.45	0.81 (20.6)	0.81 (20.6)	0.81 (20.6)	0.34	1.31	1.88	0.75	0.25	0.58	0.58
1/4" CPI™			4Z						1.12 (28.4)	1.12 (28.4)	1.12 (28.4)							
1/4" A-LOK®			4A															
6mm CPI™			M6Z						1.12 (28.4)	1.12 (28.4)	1.12 (28.4)							
6mm A-LOK®			M6A															
1/4" CPI™			4Z	MB6A MB6X	0.187	4.7	0.70	0.58	1.19 (30.2)	1.19 (30.2)	1.15 (29.2)	(8.6)	(33.3)	(47.8)	(19.1)	(6.4)	(14.7)	(14.7)
1/4" A-LOK®			4A															
1/4" Female NPT			4F						1.03 (26.2)	1.03 (26.2)	1.03 (26.2)							
1/4" VacuSeal			4V						1.03 (26.2)	1.03 (26.2)	1.03 (26.2)							
1/4" CPI™ - 1/4" CPI™ - 1/4" Male NPT			4Z4Z4M						1.19 (30.2)	1.19 (30.2)	1.03 (26.2)	0.44 (11.2)	1.56 (39.6)	2.37 (60.2)	0.88 (22.4)	0.25 (6.4)	0.77 (19.6)	0.80 (20.3)
1/4" A-LOK® - 1/4" A-LOK® - 1/4" Male NPT			4A4A4M															
3/8" CPI™			6Z						1.31 (33.3)	1.31 (33.3)	1.23 (31.2)							
3/8" A-LOK®			6A															
6mm CPI™			M6Z						1.19 (30.2)	1.19 (30.2)	1.15 (29.2)							
6mm A-LOK®			M6A															
8mm CPI™			M8Z						1.22 (31.0)	1.22 (31.0)	1.18 (30.0)							
8mm A-LOK®			M8A															
1/2" A-LOK®			8A	MB8A MB8X	0.406	10.3	5.4	0.36	1.75 (44.5)	1.75 (44.5)	1.75 (44.5)	0.69 (17.5)	2.39 (60.7)	4.50 (114.3)	1.50 (38.1)	0.38 (9.7)	1.50 (38.1)	1.50 (38.1)
1/2" A-CPI™			8Z															
1/2" Female NPT			8F		0.406	10.3	5.0	0.33	1.56 (39.6)	1.56 (39.6)	1.56 (39.6)							
3/4" A-LOK®			12A		0.406	10.3	4.9	0.39	1.75 (44.5)	1.75 (44.5)	1.75 (44.5)							
3/4" CPI™			12Z															
12mm A-LOK®			M12A		0.375	9.5	5.6	0.37	1.75 (44.5)	1.75 (44.5)	1.75 (44.5)							
12mm CPI™			M12Z															

* Tested in accordance with ISA S75.02. Gas flow will be choked when $P_1 - P_2 / P_1 = x_T$.
‡ Not applicable for the two-way Angle pattern.
† For CPI™ and A-LOK®, dimensions are measured with nuts in the finger tight position.

TOC

How to Order

Typical part number example: **2Z-MB2LPFA-SS.** Part number is created based on customer selection of product parameters, see below for example. ***Note:** If the inlet and outlet ports are the same, eliminate the outlet port designator.

The following example describes a MB Series, 2-Way, in-line pattern ball valve with 1/8" CPI™ compression end connections for ports 1 and 2 Inline.

Example: (2-Way Inline, 2-Way Angled, and 3-Way MB Series Ball Valves)

2Z			–	MB2L	PFA	–	SSP
Port 1*	Port 2*	Port 3*		Valve Series	Seat Material		Body Material

Ports 1, 2 and 3*				Valve Series	Seat Material	Body Material
1Z	1/16" CPI™	M3Z	3mm CPI™	**MB2L** MB2A MB2X	**PFA** Perfluoro Alkoxy	**SSP** Stainless Steel (Stainless Steel with Stainless Steel Panel Nut) BP Brass (Brass with Stainless Steel Panel Nut) (Only available in MB 2, 4, 6)
1A	1/16" A-LOK®	M3A	3mm A-LOK®			
2Z	**1/8" CPI™**					
2A	1/8" A-LOK®					
2F	1/8" Female NPT	M6Z	6mm CPI™	MB4L MB4A MB4X		
4Z	1/4" CPI™	M6A	6mm A-LOK®			
4A	1/4" A-LOK®					
2Z	1/8" CPI™	6Z	3/8" CPI™	MB6L MB6A MB6X		
2A	1/8" A-LOK®	6A	3/8" A-LOK®			
2F	1/8" Female NPT	M6Z	6mm CPI™			
4Z	1/4" CPI™	M6A	6mm A-LOK®			
4A	1/4" A-LOK®	M8Z	8mm CPI™			
4F	1/4" Female NPT	M8A	8mm A-LOK®			
4M	1/4" Male NPT					
4V	1/4" VacuSeal					
8Z	1/2" CPI™	12Z	3/4" CPI™	MB8A MB8L MB8X		
8A	1/2" A-LOK®	12A	3/4" A-LOK®			
8F	1/2" Female NPT	M12Z	12mm CPI™			
		M12A	12mm A-LOK®			

* Valves with identical port connections for port 1 and port 2 require only one designator.

Order Options

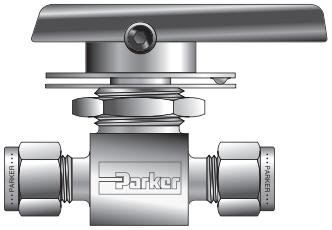

Lock-Out Device Option

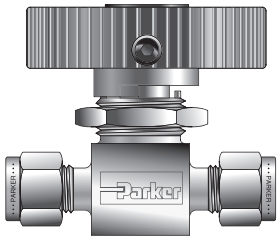

Oval Handle Option

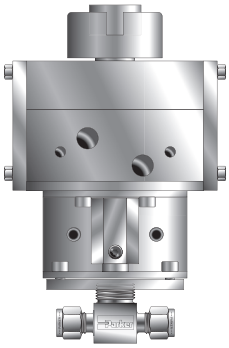

Pneumatic Actuator Option

How to Order Options (2-Way, Angle, and 3-Way)

	Example
Lock-Out Devices Add the suffix **-LD** to the end of the part number to order directly on the valve. For field installation, simply substitute the correct valve series number in the following nomenclature: LD-valve series.	2F-MB4LPFA-SSP-LD **LD-**MB6L
Colored Handles Add the designator corresponding to the correct handle as a suffix to the part number: **W** - white, **B** - blue, **G** - green, **R** - red, **Y** - yellow.	4Z-MB6LPFA-SSP**-G**
Stainless Steel Handles Add the suffix **-ST** to the part number.	4F-MB6LPFA-SSP**-ST**
Oval Handles Add the suffix **-S** to the part number. If requesting a colored oval handle, add the suffix **-S**-color designator.	6Z-MB6APFA-SSP**-S**-W (* MB6 ONLY)
Vented Valves Add the designator **V** after the **MB** in the part number for the vent option.	2Z-**MBV**2XPFA-SSP
Oxygen Cleaning Add the suffix **-C3** to the end of the part number to receive valves cleaned and assembled for oxygen service in accordance with Parker Specification ES8003.	4A-MB4LPFA-SSP**-C3**
Pneumatic Actuators For detailed actuator information, refer to Catalog 4121-PACT. For factory assembly, add the actuator part number as the suffix to the valve part number. For field installation, specify the actuator desired. The appropriate mounting hardware may be obtained by adding the valve series and actuator size to the prefix **MK-.**	4A-MB4LPFA-SSP**-AC61** **AC61** **MK-**
Electric Actuators For detailed actuator information, refer to Electric Actuators section. For factory assembly, add the actuator part number as the suffix to the valve part number. For field installation, specify the actuator desired. The appropriate mounting hardware may be obtained by adding the valve series and actuator series to the prefix **MK-**.	M6A-MB6XPFA-SSP**-71C** **71C** **MK-**MB6X-70

SWB Series Ball Valves

TOC

Parker's three-piece **SWB Series Ball Valves** are durable valves that can handle the pressure and piping loads. The center section can swing out to quickly and easily replace seats, seals and the ball without major disruption to the piping system.

Features

- Ultra low internal volume
- Free floating ball design allows for seat wear compensation
- Self-compensating stem seal
- Spring-loaded seats
- Blow out resistant stem
- Fully enclosed body bolting
- Four bolt construction
- ISO-type actuator mounting design
- Pneumatic and electric actuation options
- 100% factory tested

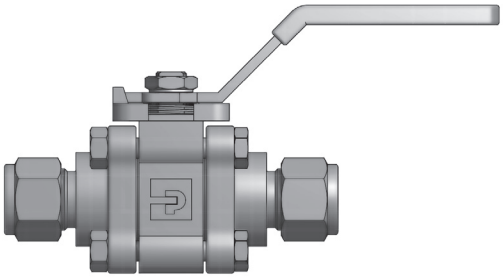

Model Shown: 8Z-SWB8L-RT-BN-SS

Specifications

Body Materials	Stainless Steel
Seat Materials	Reinforced PTFE PEEK
Seal Materials	Nitrile Rubber Ethylene Propylene Rubber Fluorocarbon Rubber PTFE Grafoil®
Flow Data	C_V: 1.1 to 35.0
Pressure Ratings	2500 psig (172 bar) 1500 psig (103 bar) SWB 16 with PEEK Seats

Temperature Ratings - Seats	
Reinforced PTFE Seats	-65°F to 450°F (-54°C to 232°C)
PEEK Seats	-65°F to 600°F (-54°C to 316°C)

Temperature Ratings - Seals	
Nitrile Rubber Seals	-40°F to 250°F (-40°C to 121°C)
Ethylene Propylene Rubber Seals	-65°F to 300°F (-54°C to 149°C)
Fluorocarbon Rubber Seals	-15°F to 400°F (-26°C to 204°C)
PTFE Seals	-65°F to 350°F (-54°C to 177°C)
Grafoil® Seals	-65°F to 600°F (-54°C to 316°C)

TOC

Materials of Construction

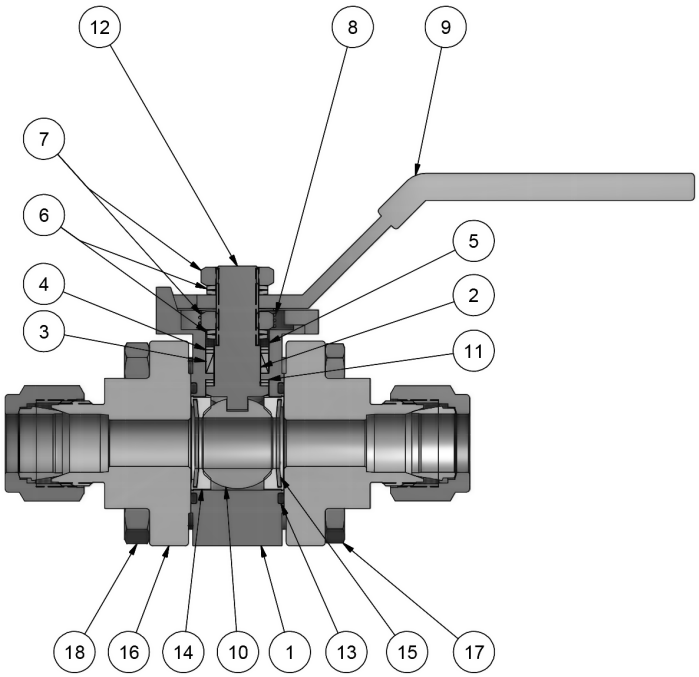

Model Shown: 4Z-SWB4L-RT-V-SS

Item #	Part	Qty	Material
1	Body	1	ASTM A 351 Grade CF3M
2	Lower Packing	1	PTFE[1]
3	Upper Packing	1	PTFE[1]
4	Packing Support	2	PEEK
5	Packing Gland	1	ASTM A 276 Type 304
6	Stem Spring	4[3]	ASTM A 666 Type 301
7	Stem Hex Nut	2	ASTM A 276 Type 304
8	Grounding Spring	1	ASTM A 276 Type 304
9	Handle Assembly	1	ASTM A 276 Type 304 Vinyl Covered
10	Ball	1	ASTM A 276 Type 316
11	Thrust Washer	2	PEEK
12	Stem	1	ASTM A 276 Type 316
13	Body Seal	2	Fluorocarbon Rubber[2]
14	Seat	2	Reinforced PTFE, PEEK[1]
15	Seat Spring[4]	2	ASTM A 666 Type 301
16	End Flanges	2	ASTM A 351 Grade CF3M
17	Body Bolts	4	ASTM A 193 Grade B8M Class 2
18	Body Bolt Nuts	4	ASTM A 194 Grade 8M

[1] Optional Seat and Packing Seal materials are described in the How to Order section.

[2] Optional Seal materials are described in the How To Order Section.

[3] Size 8 SWB Series Ball Valves only require 3 Stem Springs.

[4] PEEK seated SWB Series Ball Valves do not have Seat Springs.

TOC

Dimensions / Flow Data

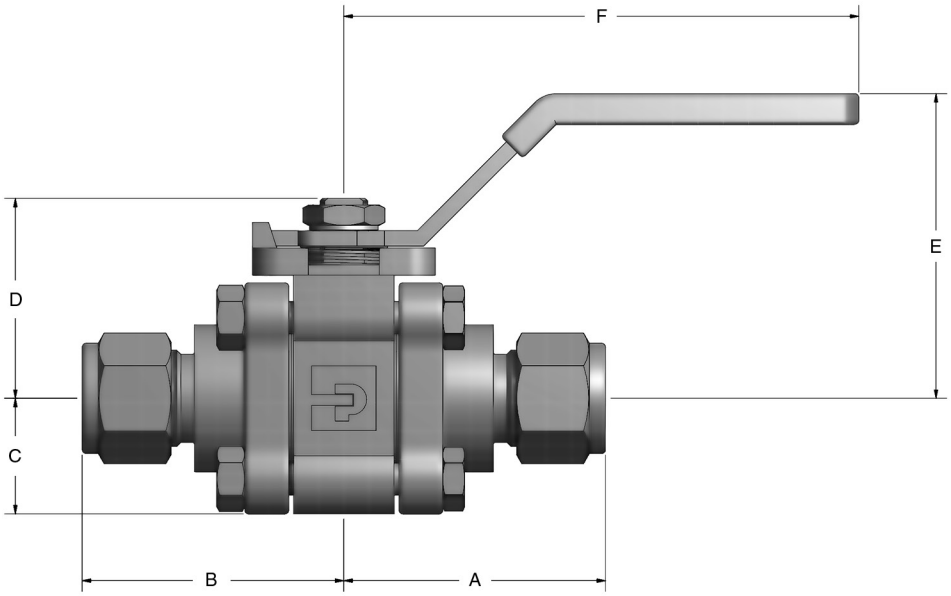

Basic Part Prefix	End Connections		Flow Data				Dimensions											
			Orifice		C_v	X_T*	A†		B†		C		D		E		F	
	Port 1	Port 2	Inch	mm			Inch	mm	Inch	mm	Inch	mm	Inch	mm	Inch	mm	Inch	mm
4Z-SWB4L	CPI™ Tube		0.19	4.8	1.1	0.19	1.59	40.4	1.59	40.4	0.68	17.3	1.28	32.5	2.00	50.8	3.00	76.2
4A-SWB4L	A-LOK® Tube																	
4F-SWB4L	Female NPT		0.28	7.1	2.9	0.29	1.09	27.7	1.09	27.7								
6Z-SWB6L	CPI™ Tube		0.28	7.1	4.5	0.19	1.59	40.4	1.59	40.4								
6A-SWB6L	A-LOK® Tube																	
6F-SWB6L	Female NPT		0.44	11.2	8.2	0.35	1.29	32.8	1.29	32.8	0.89	22.6	1.54	39.1	2.36	59.9	3.94	100.1
8Z-SWB8L	CPI™ Tube		0.41	10.4	6.4	0.35	2.03	51.6	2.03	51.6								
8A-SWB8L	A-LOK® Tube																	
8F-SWB8L	Female NPT		0.44	11.2	8.2	0.26	1.29	32.8	1.29	32.8								
8W-SWB8L	Tube Socket Weld		0.41	10.4	6.4	0.35	1.29	32.8	1.29	32.8								
8PBW8-SWB8L	Pipe Buttweld (Schedule 80)		0.44	11.2	8.2	0.26	1.35	34.3	1.35	34.3								
8PSW-SWB12L	Pipe Socket Weld		0.52	13.2	13.5	0.34	1.35	34.3	1.35	34.3	1.06	26.9	1.81	46.0	2.59	65.8	3.94	100.1
12Z-SWB12L	CPI™ Tube		0.56	14.2	14.7	0.28	2.03	51.6	2.03	51.6								
12A-SWB12L	A-LOK® Tube																	
12F-SWB12L	Female NPT		0.56	14.2	14.7	0.28	1.39	35.3	1.39	35.3								
12W-SWB12L	Tube Socket Weld		0.56	14.2	14.7	0.28	1.39	35.3	1.39	35.3								
12PBW8-SWB12L	Pipe Buttweld (Schedule 80)		0.56	14.2	14.7	0.28	1.37	34.8	1.37	34.8								
12PSW-SWB12L	Pipe Socket Weld		0.88	22.4	35.0	0.29	1.95	49.5	1.95	49.5	1.25	31.8	2.30	58.4	3.00	76.2	5.71	145.0
12Z-SWB16L	CPI™ Tube		0.56	14.2	14.7	0.28	2.50	63.5	2.50	63.5								
12A-SWB16L	A-LOK® Tube																	
16Z-SWB16L	CPI™ Tube		0.88	22.4	35.0	0.29	2.68	68.1	2.68	68.1								
16A-SWB16L	A-LOK® Tube																	
16F-SWB16L	Female NPT		0.88	22.4	35.0	0.29	1.79	45.5	1.79	45.5								
16W-SWB16L	Tube Socket Weld		0.88	22.4	35.0	0.29	1.79	45.5	1.79	45.5								
16PBW8-SWB16L	Pipe Buttweld (Schedule 80)		0.88	22.4	35.0	0.29	1.81	46.0	1.81	46.0								

* Tested in accordance with ISA S75.02. Gas flow will be choked when $P_1 - P_2 / P_1 = x_T$.
† For CPI™ and A-LOK®, dimensions are measured with nuts in the finger tight position.

Dimensions in inches/millimeters are for reference only, subject to change.

TOC

Pressure vs. Temperature

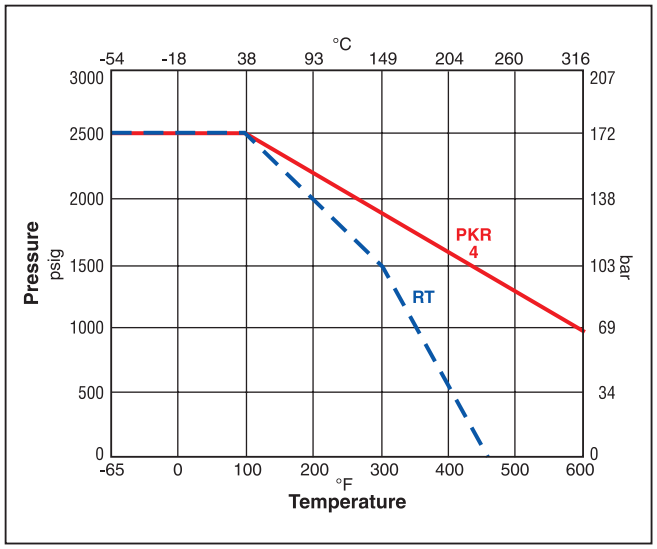

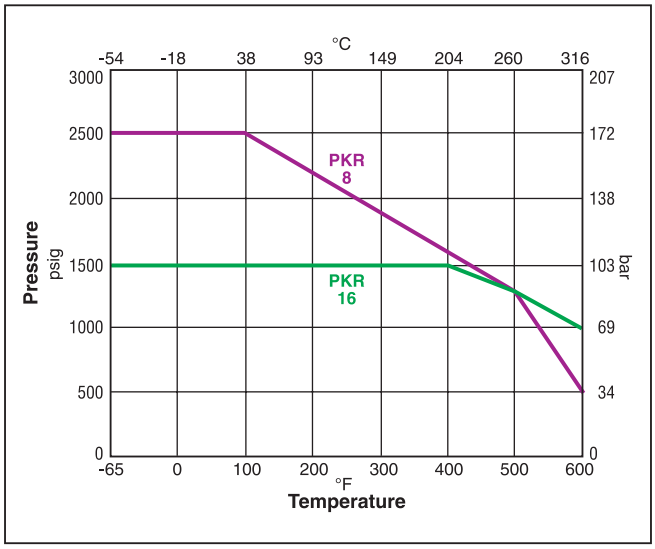

Note: This Pressure versus Temperature chart reflects the use of indicated seat materials in Stainless Steel valves without consideration of seal materials. When combining seat and seal materials, the most restrictive temperature rating of the seats or seals becomes the limiting factor on temperature range. Please refer to page 28 for seal temperature ranges.

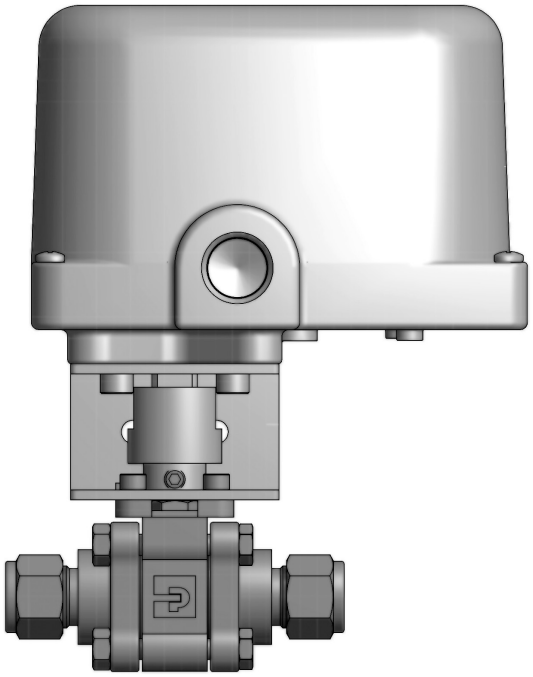

Electric Actuated Model Shown:
8A-SWB8L-RT-V-SS-71

TOC

How to Order

Typical part number example: **8A-SWB8L-RT-BN-SS.** Part number is created based on customer selection of product parameters, see below for example. ***Note:** If the inlet and outlet ports are the same, eliminate the outlet port designator.

The following example describes a SWB8L Two-Way Ball Valve with 1/2" A-LOK® end connections for ports 1 and 2, reinforced PTFE seats, Nitrile rubber body seals, and stainless steel construction.

Example:

8A			–	SWB8	L	–	RT	–	BN	–	SS
Port Size	Port 1*	Port 2*		Valve Series	Valve Configuration		Seat Material		Seal Material		Body Material

Port Size	Port 1*	Port 2*	Valve Series	Valve Configuration	Seat Material	Seal Material	Body Material
4	Z	CPI™ Tube	SWB4	**L** 2-Way	PKR Virgin PEEK[1]	T PTFE	**SS** Stainless Steel
6	**A**	A-LOK® Tube	**SWB8**		**RT** Glass Reinforced PTFE	**BN** Nitrile Rubber	
8	F	Female NPT	SWB12			EPR Ethylene Propylene Rubber	
12	W	Tube Socket Weld	SWB16			V Fluorocarbon Rubber	
16	PSW	Pipe Socket Weld				G Grafoil® Gasket[1, 2]	
	PBW8	Pipe Buttweld (Schedule 80)					

1 Not available in size 12.
2 Grafoil® Seals only available with PEEK Seats.
Note: Upper and Lower PTFE packing is replaced with PEEK when valves are ordered with PEEK Seats.

TOC

How to Order Options

	Example
Lever Lock-Out Devices Add the suffix **-LD** to the end of the part number to order directly on the valve. For field installation, order part number as shown in the example.	4F-SWB8L-RT-V-SS-**LD** SWB8/12-HANDLE-LOCKING
Oval Handles Add the suffix **-S** to the end of the part number.	8A-SWB8L-RT-T-SS-**S**
Oval Handle Lock-Out Devices Add the suffix **-LD** to the end of the part number to order directly on the valve. For field installation, order part number as shown in the example.	6F-SWB8L-RT-V-SS-S-**LD** SWB8/12-HANDLE-OVAL-LOCKING
Pneumatic Actuators For detailed actuator information, refer to the Pneumatic Actuators section of this catalog. For factory assembly, add the actuator part number as the suffix to the valve part number. Example: 4A-MB4LPFA-SSP-61AC-2. For field installation, specify the actuator desired. Example: 61AC-2. The appropriate mounting hardware may be obtained by adding the valve series and actuator size to the prefix **MK-**.	8F-SWB8L-RT-BN-SS-61AC-261AC-2 **MK-**SWB8L-61
Electric Actuators For detailed actuator information, refer to the Electric Actuators section of this catalog. For factory assembly, add the actuator part number as the suffix to the valve part number. Example: M6A-MB6XPFA-SSP-71C. For field installation, specify the actuator desired. Example: 71C. The appropriate mounting hardware may be obtained by adding the valve series and actuator series to the prefix **MK-**.	8A-SWB8L-RT-EPR-SS-71A 71A **MK-**SWB8L-70

HB Series Ball Valves

TOC

Parker High Pressure **HB4 Series Ball Valves** provide reliable shut-off or switching functions. The upper and lower trunnion bearings enhance the resistance of the trunnions against seizure, and increase the valve life in extreme applications.

The compact and rugged design employs spring-loaded seats for high cycle life and low operating torques at pressures up to 10,000 psig (689 bar).

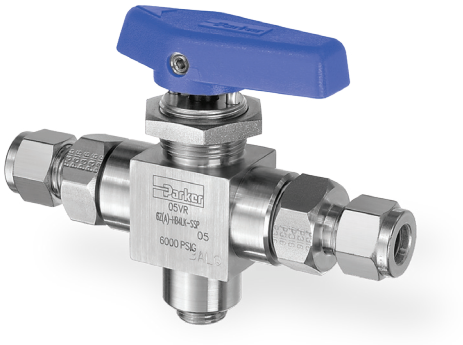

Features

- PEEK trunnion bearings for longer cycle life
- Two-way and three-way designs
- Compact FNPT version for tight work areas
- Blow-out resistant two-piece ball/stem
- Full operating pressure at any port
- Low operating torque
- Manual, electric or pneumatic actuation
- Panel mountable to 3/8” (9.6mm) thickness
- No packing to adjust
- Color coded fracture resistant handles
- Handle indicates direction of flow
- Positive handle stops
- Wide variety of US customary and SI ports
- Top of stem marked to indicate flow direction
- 100% factory tested
- Compact package
- Heat code traceability

Specifications

Pressure Rating	10,000 psig (689 bar) CWP with PEEK (PKR) Seats 6,000 psig (414 bar) CWP with PCTFE (K) Seats
Temperature Rating	-65˚F to 400˚F (-54˚C to 204˚C)
Body Materials	Stainless Steel
Body Configuration	2-way and 3-way
Port Connections	Tube compression (CPI™/A-LOK®) Short and long female NPT
Port Size	1/8" – 1/2” (6 mm to 12 mm)

Flow Data

	2-Way HB4L	3-Way HB4X
C_V	1.02	0.62
X_T	0.42	0.71
Orifice	0.188 (4.8mm)	0.188 (4.8mm)

Tested in accordance with ISA S75.02. Gas flow will be choked when $P_1 - P_2 / P_1 = x_T$.

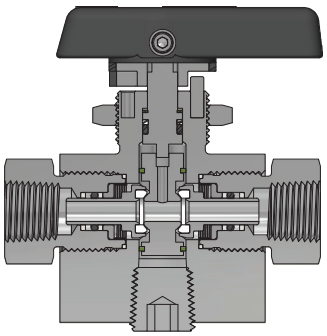

HB4L (Two-Way) Design

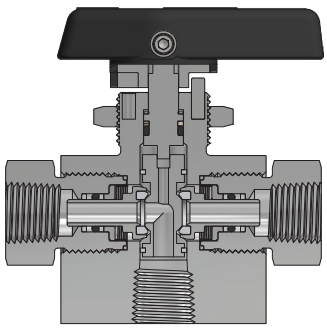

HB4X (Three-Way) Design

TOC

Materials of Construction

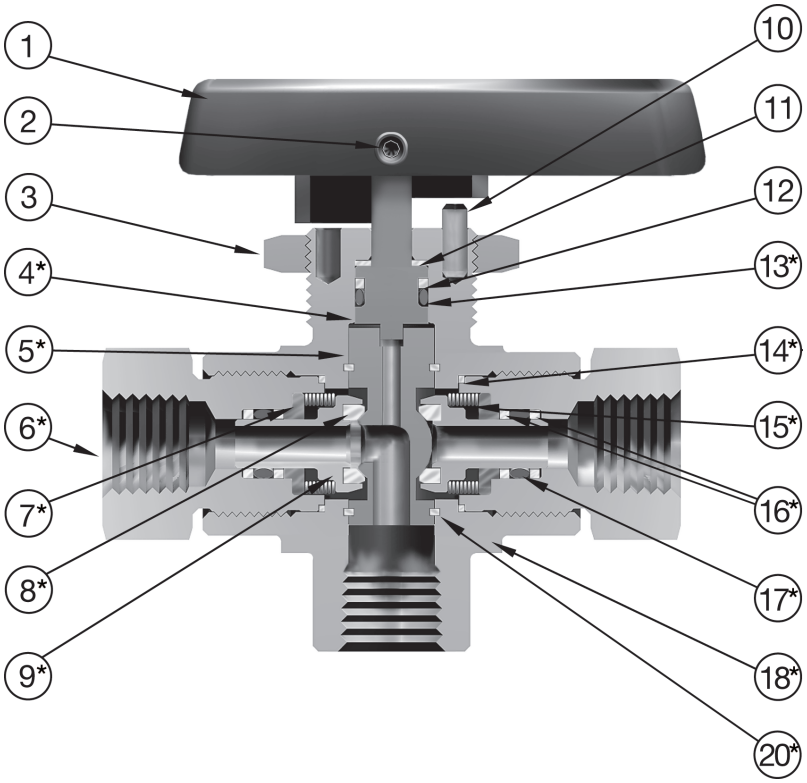

No.	Part Description	6,000 psi (414 bar)	10,000 psi (689 bar)
1	Handle/insert	Nylon 6/6/316 SS	Nylon 6/6/316 SS
2	Handle screw	Stainless steel	Stainless steel
3	Panel nut	316 Stainless steel	316 Stainless steel
4*	Stem	ASTM A 479 Type 316	ASTM A 479 Type 316
5*	Ball trunnion	ASTM A 479 Type 316	ASTM A 479 Type 316
6*	Port end connector	ASTM A 479 Type 316	ASTM A 479 Type 316
7*	Spring washer	ASTM A 479 Type 316	ASTM A 479 Type 316
8*	Seat	PCTFE	PEEK
9*	Seat retainer	ASTM A 276 Type 316	ASTM A 276 Type 316
10	Handle stop pins	302 Stainless steel	302 Stainless steel
11	Stem washer	PEEK	PEEK
12	Stem O-ring back-up	PTFE	PTFE
13*	Stem O-ring	Fluorocarbon rubber**	Fluorocarbon rubber**
14*	Connector end seal	PEEK	PEEK
15*	Spring	ASTM A 313 Type 631	ASTM A 313 Type 631
16*	Seat retainer O-ring back-up	PTFE	PTFE
17*	Seat Retainer O-ring	Fluorocarbon rubber**	Fluorocarbon rubber**
18*	Valve body	ASTM A 276 Type 316	ASTM A 276 Type 316
19*	Pipe plug (Not shown/HB4L only)	316 Stainless steel	316 Stainless steel
20*	Trunnion bearing	PEEK	PEEK

* Wetted parts
** Optional elastomer seals available
Lubrication: Perfluorinated polyether

TOC

Dimensions / Flow Data

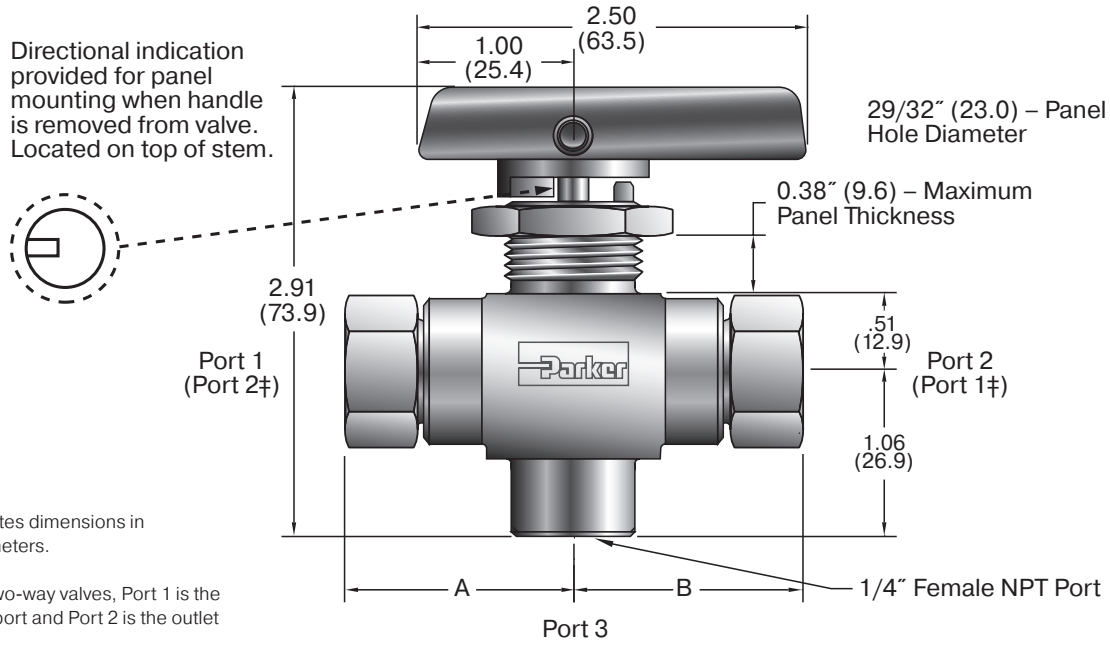

( ) Denotes dimensions in millimeters.

‡ For two-way valves, Port 1 is the inlet port and Port 2 is the outlet port.

Model shown: **4F-HB4XPKR-SSP**

End Connection		Pressure Rating @100°F (38°C)		Dimensions			
				A‡		B‡	
Port 1	Port 2	psig	bar	inch	mm	inch	mm
1/8" Female NPT		10,000	689	1.47	37.3	1.47	37.3
1/4" Female NPT				1.47	37.3	1.47	37.3
1/4" Female NPT (Long)				1.97	50.0	1.97	50.0
1/4" A-LOK® Compression				2.07	52.6	2.07	52.6
1/4" CPI™ Compression				2.07	52.6	2.07	52.6
6 mm A-LOK® Compression				2.07	52.6	2.07	52.6
6 mm CPI™ Compression				2.07	52.6	2.07	52.6
3/8" A-LOK® Compression		6,600†	455	2.19	55.6	2.19	55.6
3/8" CPI™ Compression				2.19	55.6	2.19	55.6
1/2" A-LOK® Compression		6,300†	434	2.30	58.4	2.30	58.4
1/2" CPI™ Compression				2.30	58.4	2.30	58.4
8 mm A-LOK® Compression		7,975†	550	2.07	52.6	2.07	52.6
8 mm CPI™ Compression				2.07	52.6	2.07	52.6
10 mm A-LOK® Compression		6,525†	450	2.19	55.6	2.19	55.6
10 mm CPI™ Compression				2.19	55.6	2.19	55.6
12 mm A-LOK® Compression		6,162†	425	2.30	58.4	2.30	58.4
12 mm CPI™ Compression				2.30	58.4	2.30	58.4

* Flow configurations are two-way (HB4L) and three-way (HB4X); Seat materials are PEEK (Polyetheretherketone) and PCTFE (Polychlorotrifluoroethylene).

** Designed with shorter end-to-end dimensions than the 4FL model to save space.

† Reduced pressure rating is determined by the maximum rated pressure of the tubing as stated in the Parker Instrument Tubing Selection Guide Bulletin 4200-TS. The working pressure ratings are limited by the seat material (PCTFE – 6,000 psig (414 bar) maximum and PEEK – 10,000 psig (689 bar) maximum) and the temperature of the application.

†† For CPI™ and A-LOK® , dimensions are measured with nuts in the finger tight position.

Pressure vs. Temperature

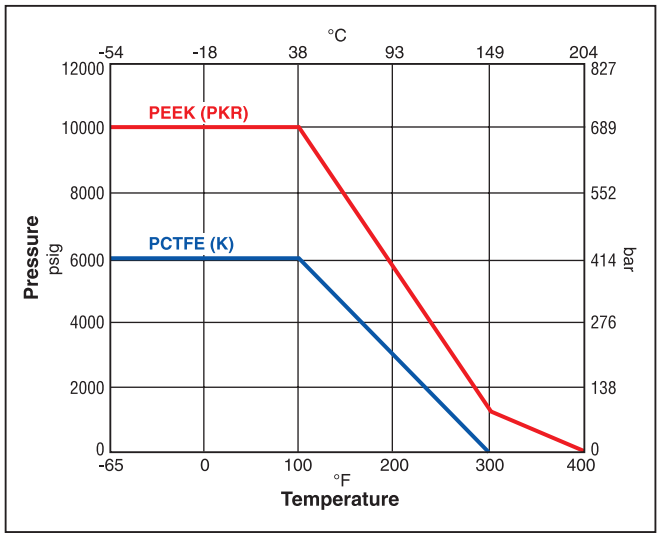

Note: To determine MPa, multiply bar by 0.1

This pressure versus temperature chart reflects the maximum temperature range of indicated materials.

When combining seat and seal materials, the most restrictive temperature rating of the seats or seals becomes the limiting factor on valve temperature range.

Temperature Ratings:

Nitrile (Nitrile) Rubber	40°F to 250°F (-40°C to 121°C)
Ethylene Propylene Rubber	-65°F to 300°F (-54°C to 149°C)
Fluorocarbon Rubber	-15°F to 400°F (-26°C to 204°C)

Flow Calculations: 2-Way HB4L

Inlet Pressure		Pressure Drop ΔP		Water @ 60°F (16°C)		Air @ 60°F (16°C)	
psig	bar	psig	bar	gpm	m3/hr	scfm	m3/hr
100	7	1	0.1	1.0	0.2	10.8	17.4
		10	0.7	3.2	0.7	32.0	50.7
		50	3.5	7.2	1.6	50.5	76.0
1000	69	10	0.7	3.2	0.7	101.3	171.3
		100	6.9	10.2	2.3	297.7	502.3
		500	34.5	22.8	5.2	446.7	749.6
3000	207	100	6.9	10.2	2.3	542.0	919.9
		1000	69.0	32.3	7.3	1297.0	2198.9
		1500	103.4	39.5	9.0	1327.2	2248.8
6000	414	1000	69.0	32.3	7.3	2158.5	3662.7
		2000	137.9	45.6	10.4	2188.5	4388.6
		3000	206.8	55.9	12.7	2647.9	4486.8
10000	689	1000	69.0	32.3	7.3	2954.3	5020.2
		2000	137.9	45.6	10.4	3818.4	6487.0
		3000	206.8	55.9	12.7	4236.2	7194.9

Flow Calculations: 3-way HB4X

Inlet Pressure		Pressure Drop ΔP		Water @ 60°F (16°C)		Air @ 60°F (16°C)	
psig	bar	psig	bar	gpm	m3/hr	scfm	m3/hr
100	7	1	0.1	0.6	0.1	6.6	10.6
		10	0.7	2.0	0.4	20.0	31.9
		50	3.5	4.4	1.0	37.1	57.4
1000	69	10	0.7	2.0	0.4	61.8	104.4
		100	6.9	6.2	1.4	187.2	316.1
		500	34.5	13.9	3.1	337.4	567.7
3000	207	100	6.9	6.2	1.4	333.1	565.4
		1000	69.0	19.6	4.5	903.4	1532.8
		1500	103.4	24.0	5.5	1004.4	1703.2
6000	414	1000	69.0	19.6	4.5	1393.5	2365.2
		2000	137.9	27.7	6.3	1803.8	3060.4
		3000	206.8	34.0	7.7	2004.9	3399.8
10000	689	1000	69.0	19.6	4.5	1858.9	3159.0
		2000	137.9	27.7	6.3	2499.6	4247.2
		3000	206.8	34.0	7.7	2903.0	4932.1

TOC

How to Order

The part number sequence identifies product characteristics as shown below . ***Note:** If the inlet and outlet ports are the same, eliminate the outlet port designator.

Example 1 below describes a HB4X, three-way ball valve with 1/4" CPI™ compression end connections for ports 1 and 2, PEEK seats and fluorocarbon rubber seals, stainless steel body construction, and a panel mounting nut. Port 3 is always a 1/4" Female NPT port.

Example 2 below describes a HB4L, two-way ball valve with a 1/4" female NPT port 1 and a 1/4" A-LOK® compression port 2, PCTFE seats and ethylene propylene rubber seals, stainless steel body construction, and a panel mounting nut.

Note: Port 3 will always have a 1/4" Male NPT plug when ordering a HB4L Series two-way ball valve.

Example 1:

4Z		–	HB4X	–	PKR	–		–	SSP
Port 1*	Port 2*		Valve Series		Seat Material		Seal Material		Body Material

Example 2:

4F	4A	–	HB4L	–	PKR	–	EPR	–	SSP
Port 1*	Port 2*		Valve Series		Seat Material		Seal Material		Body Material

Port 1*		Port 2*		Valve Series		Seat Material		Seal Material		Body Material	
2F	1/8" Female NPT	2F	1/8" Female NPT	HB4L	2-way	**PKR**	PEEK – Polyetherether-ketone	**Blank**	Fluoro-carbon Rubber	**SSP**	Stainless Steel with Panel Nut
4F	1/4" Female NPT	4F	1/4" Female NPT	**HB4X**	3-way	K	PCTFE – Polychloro-trifluoro-ethylene	BN	Nitrile Rubber		
4FL	1/4" Female NPT (Long)	4FL	1/4" Female NPT (Long)					EPR	Ethylene Propylene Rubber		
4A	1/4" A-LOK® Comp.	4A	1/4" A-LOK® Comp.								
4Z	**1/4" CPI™ Comp.**	4Z	1/4" CPI™ Comp.								
4MP7	1/4" MPI™ Comp.	4MP7	1/4" MPI™ Comp.								
6A	3/8" A-LOK® Comp.	6A	3/8" A-LOK® Comp.								
6Z	3/8" CPI™ Comp.	6Z	3/8" CPI™ Comp.								
6MP7	3/8" MPI™ Comp.	6MP7	3/8" MPI™ Comp.								
8A	1/2" A-LOK® Comp.	8A	1/2" A-LOK® Comp.								
8Z	1/2" CPI™ Comp.	8Z	1/2" CPI™ Comp.								
M6A	6 mm A-LOK® Comp.	M6A	6 mm A-LOK® Comp.								
M6Z	6 mm CPI™ Comp.	M6Z	6 mm CPI™ Comp.								
M8A	8 mm A-LOK® Comp.	M8A	8 mm A-LOK® Comp.								
M8Z	8 mm CPI™ Comp.	M8Z	8 mm CPI™ Comp.								
M10A	10 mm A-LOK® Comp.	M10A	10 mm A-LOK® Comp.								
M10Z	10 mm CPI™ Comp.	M10Z	10 mm CPI™ Comp.								
M12A	12 mm A-LOK® Comp.	M12A	12 mm A-LOK® Comp.								
M12Z	12 mm CPI™ Comp.	M12Z	12 mm CPI™ Comp.								

Note: "Comp" = Compresssion
* If ports 1 and 2 are the same, eliminate the port 2 designator.

Actuator Options

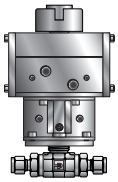

Double Acting (AD61)
Pneumatic Actuator

Spring Returns
(AC61 & AO61)
Pneumatic Actuator

70, 80 & 90 Series
Electric Actuator

How to Order Options

	Example
Pneumatic Actuators: For detailed actuator information, refer to the Pneumatic Actuators section of this catalog. For factory assembly, add the actuator part number as the suffix to the valve part number. For field installation, specify the actuator desired. The appropriate mounting hardware may be obtained by adding the valve series and actuator size to the prefix **MK-**.	4FL-HB4XK-SS-61ACX-2 61ACX-2 **MK-**HB4X-61
Electric Actuators: For detailed actuator information, refer to the Electric Actuators section of this catalog. For factory assembly, add the actuator part number as the suffix to the valve part number. For field installation, specify the actuator desired: The appropriate mounting hardware may be obtained by adding the valve series and actuator series to the prefix **MK-**	6A-HB4XPKR-SP-71XA 71XA **MK-**HB4X-70
Oxygen Cleaning: Add the suffix **-C3** to the end of the part number to receive valves cleaned in accordance with ASTM G93 level C, class 500. This ASTM details cleaning methods and cleanliness levels for materials and equipment used in oxygen-enriched environments.	4A-HB4LPKR-EPR-SSP**-C3**
How to Order Maintenance Kits	
Lock-Out Devices: For field installation, simply substitute the correct valve series number after **LD-**.	**LD-**HB8L
Colored Lever Handle Kits: Series-Handle-Color. Black is standard. B = Blue, G = Green, R = Red (Example consists of a red handle and handle screw.)	HB4-HANDLE-**R**
2-Way Valve Seal Kits: Consists of a two-way trunnion, springs, stem washers, stem seal, back-up ring, end connector seals, seat springs, seat retainer seals, seat retainer back-up rings, and seat assemblies.	KIT-HB4LPKR-SS KIT-HB4LK-SS
3-Way Valve Seal Kits: Consists of a three-way trunnion, springs, stem washers and stem seal, back-up ring, end connector seals, seat springs, seat retainer seals, seat retainer back-up rings, and seat assemblies.	KIT-HB4XPKR-SS KIT-HB4XK-SS

Pneumatic Actuators

TOC

Parker offers a complete line of Rotork® GT Range double rack and pinion pneumatic actuators with accessories including Soldo® limit switches and Parker® NAMUR mounted solenoid valves for automating Parker ball valves. Actuators are available in 90º and 180º rotation models as double acting or spring return in either normally closed or normally open configurations.

The Rotork GT Range actuator has been proven over a 30-year history in many thousands of installations in diverse applications worldwide.

For more detailed technical information on Rotork GT actuators, visit https://www.rotork.com/en/products/light-duty-fluid-actuators/gt

Specifications

Supply Air Pressure Range:	60 psig to 145 psig (4 bar to 10 bar)	
Standard Temperature Range:	-58 ºF to 158 ºF (-50 ºC to 70 ºC)	Buna N nitrile o-rings and Delrin® bushings/bearings
High Temperature Range (**HT**):	5 ºF to 320 ºF (-15 ºC to 160 ºC)	FKM o-rings and Ixef® PARA Polyarylamide bushings/bearings

Note: Delrin® is a registered trademark of DuPont. Ixef® PARA is the registered trademark of Solvay Group

90º Actuators	Code
Normally Closed Spring Return	**AC**
Normally Open Spring Return	**AO**
Double Acting	**AD**

180º Actuators	Code
Spring Return	**ACX**
Double Acting	**ADX**

TOC

Actuator Dimensional Data:

Type	Model	A		B		C		D		E		F-Series ISO 5211	H1	H2	G Square
		Inch	mm	Inch	mm	Inch	mm	Inch	mm	Inch	mm				
90º Spring Return	AC/AO61	4.6	116	1.4	35	3.7	95	2.4	61	2.6	65	F04	M5	-	9 mm
	AC/AO62	5.2	133	1.5	39	4.1	104	2.7	69	2.9	74	F03/F05	M5	1/4-20 UNC	14 mm
	AC/AO63	5.4	137	1.8	46	4.7	118	3.2	80	3.5	88	F05/F07	1/4-20 UNC	5/16-18 UNC	14 mm
	AC/AO64	6.3	161	2.1	52	5.1	130	3.6	92	3.9	100	F05/F07	1/4-20 UNC	5/16-18 UNC	17 mm
	AC/AO65	7.1	180	2.2	56	5.4	138	3.9	100	4.3	108	F05/F07	1/4-20 UNC	5/16-18 UNC	17 mm
90º Double Acting	AD61	4.6	116	1.4	35	3.7	95	2.4	61	2.6	65	F04	M5	-	9 mm
	AD63	5.4	137	1.8	46	4.7	118	3.2	80	3.5	88	F05/F07	1/4-20 UNC	5/16-18 UNC	14 mm
180º Spring Return	ACX62	7.7	195	1.5	39	4.1	104	2.7	69	2.9	74	F03/F05	M5	1/4-20 UNC	14 mm
	ACX63	7.9	200	1.8	46	4.7	118	3.2	80	3.5	88	F05/F07	1/4-20 UNC	5/16-18 UNC	14 mm
	ACX64	9.3	237	2.1	52	5.1	130	3.6	92	3.9	100	F05/F07	1/4-20 UNC	5/16-18 UNC	17 mm
180º Double Acting	ADX62	7.7	195	1.5	39	4.1	104	2.7	69	2.9	74	F03/F05	M5	1/4-20 UNC	14 mm

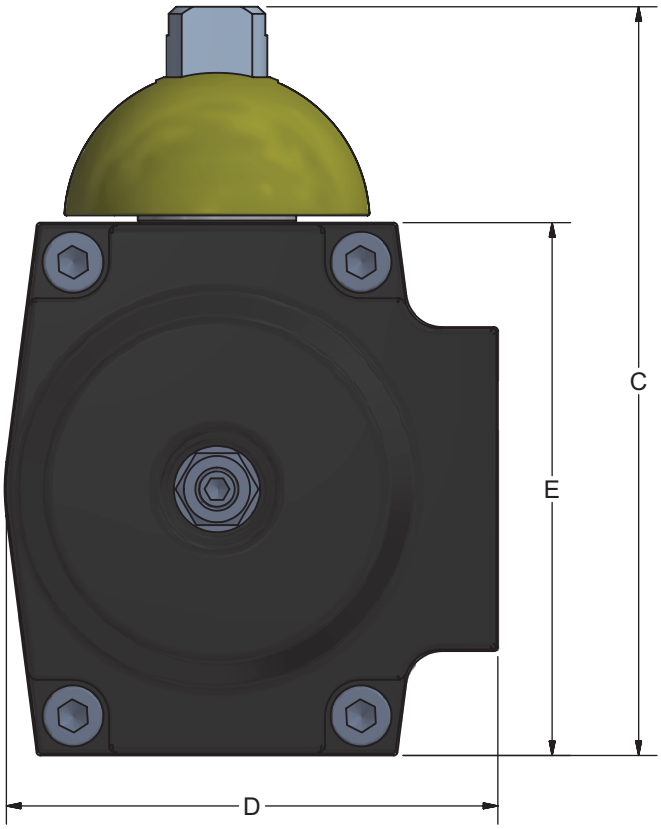

Dimensions in inches/millimeters are for reference only. Content subject to change without notice

TOC

Actuator Dimensional Data:

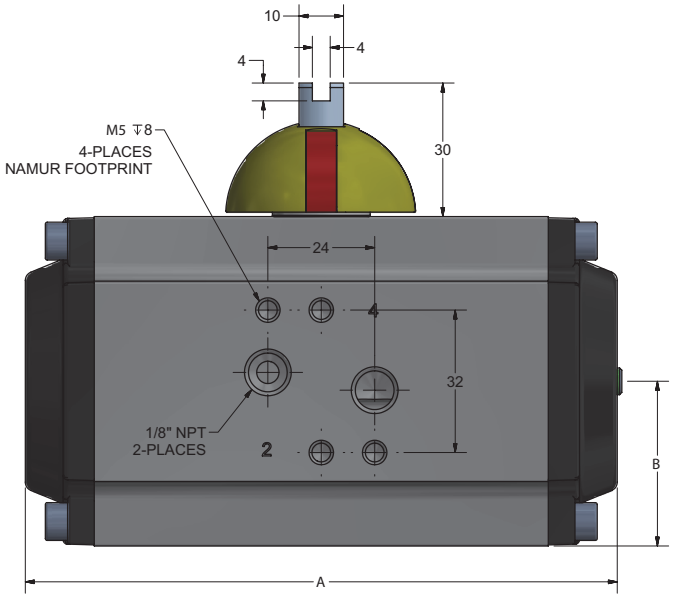

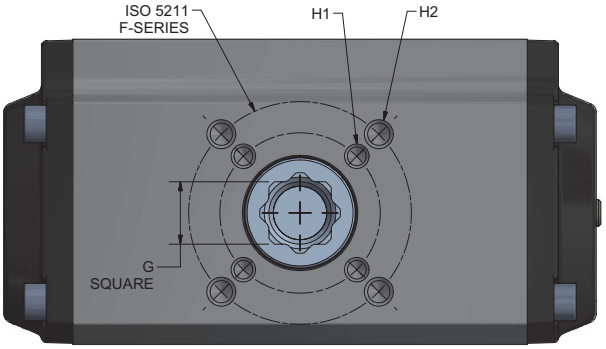

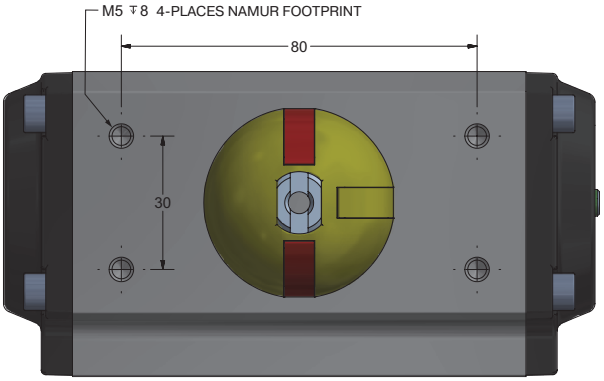

Actuator Weight and Displacement

90° Spring Return				
Series	Weight		Displacement	
	lbs.	Kg	cuin	ml
AC/AO61	1.5	0.7	6	98
AC/AO62	2.2	1	8	130
AC/AO63	3.6	1.6	13	210
AC/AO64	5.4	2.5	20	320
AC/AO65	6.5	3	28	450

180° Spring Return				
Series	Weight		Displacement	
	lbs.	Kg	cuin	ml
ACX62	2.9	1.3	16	265
ACX63	4.5	2	26	420
ACX64	6.5	3	39	640

90° Double Acting				
Series	Weight		Displacement	
	lbs.	Kg	cuin	ml
AD61	1.3	0.6	11	180
AD63	3.2	1.5	25	400

180° Double Acting				
Series	Weight		Displacement	
	lbs.	Kg	cuin	ml
ADX62	6.5	3.0	39	640

Dimensions in inches/millimeters are for reference only. Content subject to change without notice

TOC

Actuator Torques

Normally Closed and Normally Open: 90° Spring Return Pneumatic Actuators									
Series	Position	Spring Torque		Pneumatic Torque					
				60 psig (4.1 bar)		80 psig (5.5 bar)		100 psig (6.9 bar)	
		in-lb	Nm	in-lb	Nm	in-lb	Nm	in-lb	Nm
AC/AO61	Start	56	6.3	45	5.1	78	8.8	107	12.1
	End	37	4.2	26	2.9	59	6.7	88	9.9
AC/AO62	Start	85	9.6	91	10.3	139	15.7	186	21
	End	51	5.8	56	6.3	104	11.8	152	17.2
AC/AO63	Start	117	13.2	131	14.8	202	22.8	273	30.8
	End	80	9	93	10.5	163	18.4	234	26.4
AC/AO64	Start	211	23.8	224	25.3	346	39.1	468	52.9
	End	139	15.7	151	17.1	273	30.8	395	44.6
AC/AO65	Start	297	33.6	335	37.8	512	57.8	689	77.8
	End	192	21.7	228	25.8	405	45.8	582	65.8

180° Spring Return Pneumatic Actuators									
Series	Position	Spring Torque		Pneumatic Torque					
				60 psig (4.1 bar)		80 psig (5.5 bar)		100 psig (6.9 bar)	
		in-lb	Nm	in-lb	Nm	in-lb	Nm	in-lb	Nm
ACX62	Start	106	12	115	13	168	19	221	25
	End	18	2	27	3.1	80	9	133	15
ACX63	Start	150	16.9	150	16.9	230	26	301	34
	End	53	6	44	5	133	15	204	23
ACX64	Start	274	31	257	29	398	45	522	59
	End	89	10.1	71	8	212	24	336	38

Double Acting: 90° Pneumatic Actuators						
Series	Pneumatic Torque					
	60 psig (4.1 bar)		80 psig (5.5 bar)		100 psig (6.9 bar)	
	in-lb	Nm	in-lb	Nm	in-lb	Nm
AD61	86	9.7	115	13	143	16.2
AD63	212	24	283	32	354	40

Double Acting: 180° Pneumatic Actuators						
Series	Air Torque					
	60 psig (4.1 bar)		80 psig (5.5 bar)		100 psig (6.9 bar)	
	in-lb	Nm	in-lb	Nm	in-lb	Nm
ADX62	143	16.2	190	21.5	238	26.9

TOC

Recommended Actuator

Valve Series	Double Acting AD/ADX	Spring Return AC/AO/ACX
B2LJ	AD61	AC/AO61
B2LJ2	AD61	AC/AO61
B2XJ	ADX62	ACX62
B2XJ2	ADX62	ACX62
B6LJ	AD61	AC/AO61
B6LJ2	AD61	AC/AO61
B6LS2	AD61	AC/AO61
B6LPKR	AD61	AC/AO61
B6LSPKR	AD61	AC/AO61
B6XJ	ADX62	ACX62
B6XJ2	ADX62	ACX63
B6XS2	ADX62	ACX63
B6XPKR	ADX62	ACX63
B6XSPKR	ADX62	ACX63
B8LJ	AD61	AC/AO61
B8LJ2	AD61	AC/AO63
B8LS2	AD61	AC/AO62
B8LPKR	AD61	AC/AO62
B8LSPKR	AD61	AC/AO62
B8XJ	ADX62	ACX62
B8XJ2	ADX62	ACX64
B8XS2	ADX62	ACX64
B8XPKR	ADX62	ACX64
B8XSPKR	ADX62	ACX64
HB4LPKR	AD61	AC/AO62
HB4LK	AD61	AC/AO61
HB4XPKR	ADX62	ACX63
HB4XK	ADX62	ACX63
MB2A	AD61	AC/AO61
MB2L	AD61	AC/AO61
MB2X	ADX62	ACX62
MB4A	AD61	AC/AO61
MB4L	AD61	AC/AO61
MB4X	ADX62	ACX62
MB6A	AD61	AC/AO61
MB6L	AD61	AC/AO61
MB6X	ADX62	ACX62
SWB4	AD61	AC/AO61
SWB8	AD61	AC/AO63
SWB12	AD61	AC/AO64
SWB16	AD63	AC/AO65

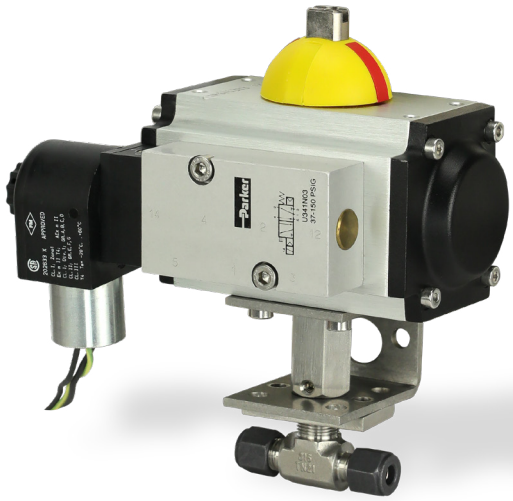

Mounted Actuator Dimensions

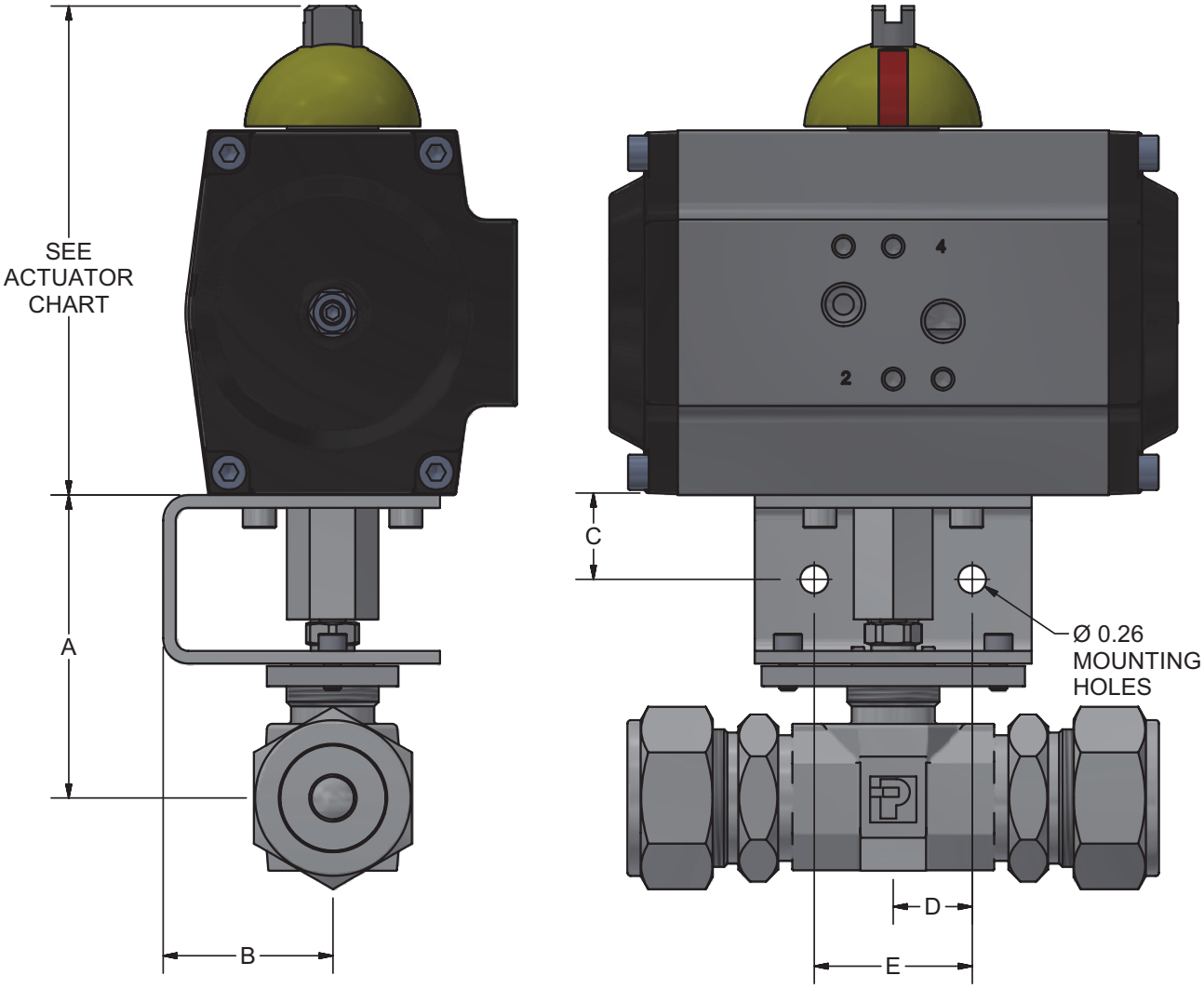

Valve Series	A		B		C		D		E	
	Inch	mm	Inch	mm	Inch	mm	Inch	mm	Inch	mm
B2	2.23	56.6	1.61	40.9	0.8	20.3	0.75	19.1	1.5	38.1
B6	2.49	63.2								
B8	2.91	73.9								
MB2	2.33	59.2								
MB4	2.33	59.2								
MB6	2.48	63								
HB4	2.7	68.6								
SWB4	2.57	65.2	1.25	31.7	0.82	20.1				
SWB8	2.79	70.9								
SWB12	2.95	74.9								
SWB16	3.14	79.7								

TOC

Accessories: NAMUR Solenoid Valves

The Parker High Flow Solenoid Valve is a single solenoid, pilot operated valve available in a 3/2, 5/2 configuration with a locking manual override. An included conversion plate allows for service on either spring return or double acting actuators.

Valve Specifications

- Body Material: Aluminum
- Seals: FKM
- Inlet Pressure: 60 psig to 145 psig (4 bar to 10 bar)
- Temperature Rating: 14°F to 122°F (-10°C to 50°C)
- Media: Dry or Lubricated Air
- Flow Coefficient: Cv = 1.2
- Air Connections: ¼ NPT

Solenoid Coil Connections

- DIN 43650 type B for IP65 protection
- ½ NPT conduit with 24" lead wires for NEMA 2, 4, 4X for ordinary locations and NEMA 7 and 9 for hazardous locations.

Hazardous Location Coil Certifications

FM

- Divisions I; Class I, Groups A, B, C, D
- Divisions II; Class I, Groups E, F, and G
- Class 1, Zone 1, Ex m II T4

CSA

- Divisions I; Class I, Groups A, B, C, D
- Divisions II; Class I, Groups E, F, and G
- Class 1, Zone 1, Ex m II T4

Coil Voltages – Ordinary Location

12 VDC; 24 VDC; 120 VAC 50-60 Hz; 240 VAC 50-60 Hz

Coil Voltages – Hazardous Location

12 VDC; 24 VDC; 120 VAC 60 Hz; 240 VAC 60 Hz

Solenoid coils are rated for 100% continuous duty.

DIN coils have Class F insulation rating.

½" NPT coils have Class H insulation rating.

TOC

Accessories: Limit Switches

Parker offers two models of Rotork® Soldo® limit switches, the SB for safe areas and the SX for hazardous locations. Soldo® limit switches feature a split shaft design with self lubricating bushings, easy-set cams for switch calibration, 90º and 180º high profile visual indicator.

For more detailed technical information on Soldo Limit Switches, visit:

https://www.rotork.com/en/products/valve-automation/soldo-controls-limit-switch-boxes

SB Limit Switch Specifications

Material: Aluminum body with polycarbonate cap

Cable Entries: Two ½" NPT

Wiring: Terminal board including pass-thru solenoid valve connections

Switches: Two SPDT electro-mechanical with silver contacts

Switch Rating: 5 A @ 250 VAC; 0.6 A @ 125 VDC

Temperature Rating: -4ºF to 176ºF (-20ºC to 80ºC)

Protection: NEMA 4 and 4X

Approvals: UL for safe area

SX Limit Switch Specifications

Material: Heavyduty aluminum enclosure

Cable Entries: Two ½" NPT

Wiring: Terminal board including pass-thru solenoid valve connections

Switches: Two SPDT hermetically sealed magnetic reed switches

Switch Rating: 1.0 A @ 24 VDC

Temperature Rating: -4ºF to 176ºF (-20ºC to 80ºC)

Protection: NEMA 4, 4X, 7 and 9

Approvals: Class I Division 1 Groups C, D Division II Groups A, B, C, D

Class II Division 2 Groups E, F, G, Division 2 Groups F, G

TOC

Accessories: Limit Switch Dimensions

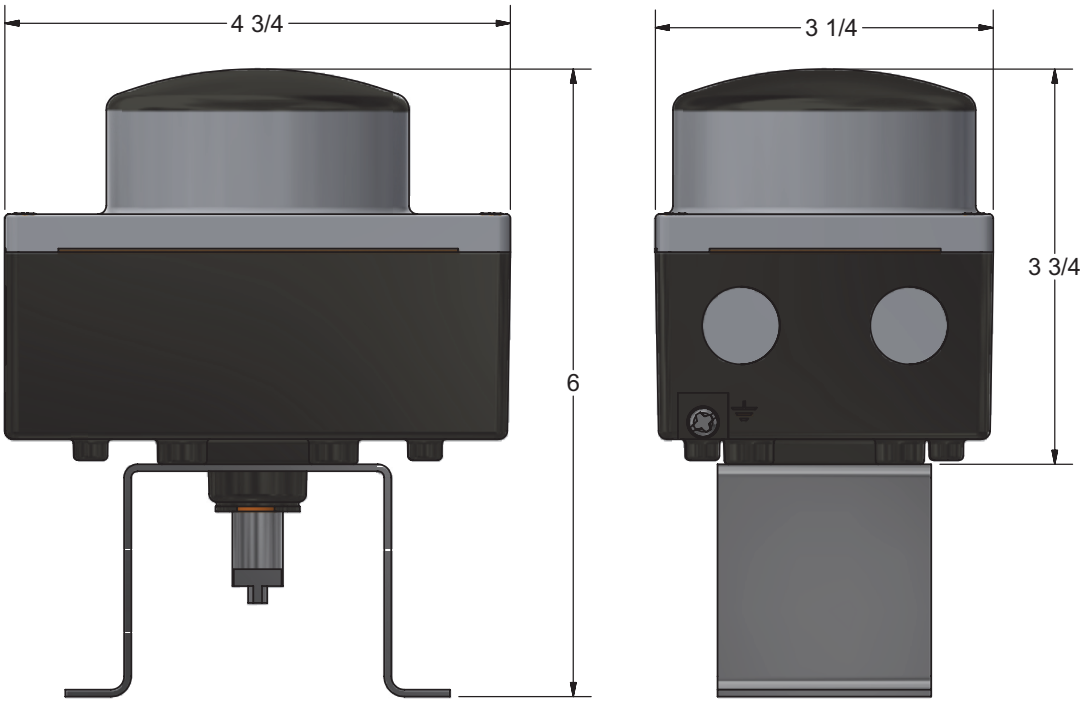

SB Limit Switch

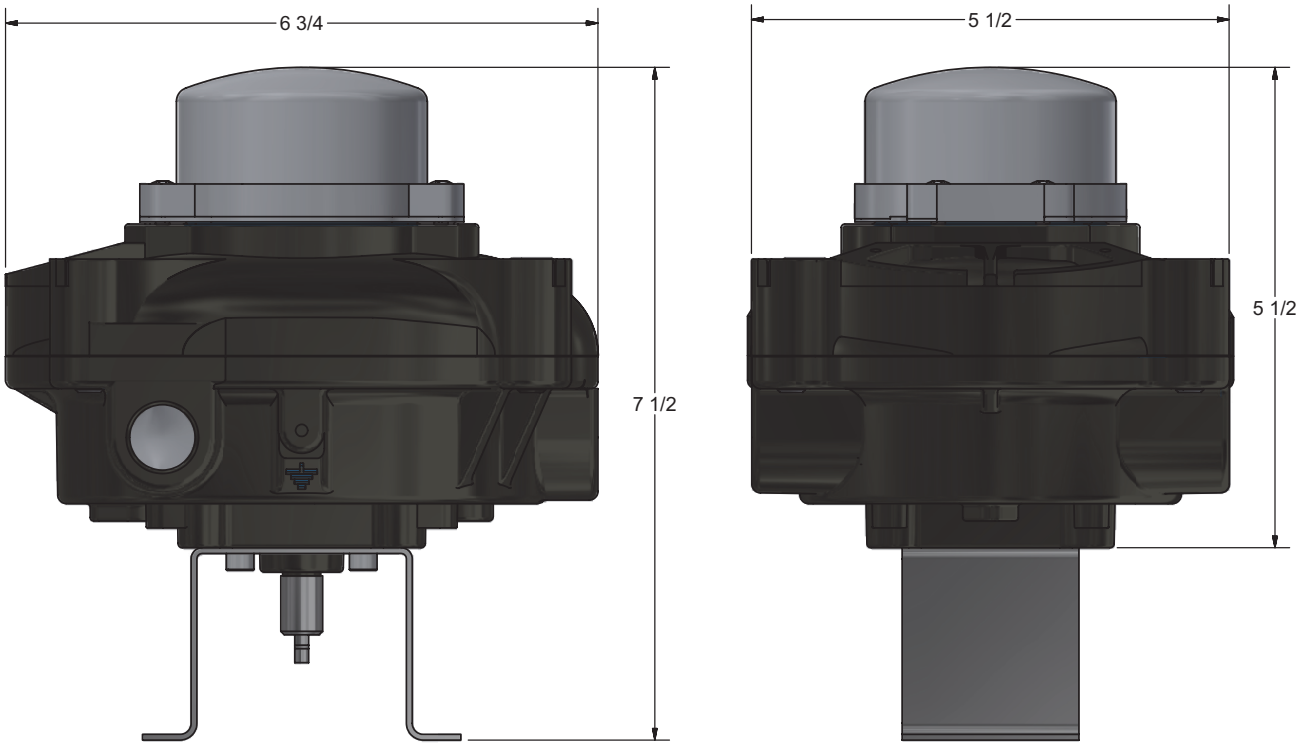

SX Limit Switch

TOC

How to Order

Factory Assembled Valves with Actuators

Select the corresponding actuator model designation based on the valve series from the Recommended Actuator Table on page 42 and add it as a suffix to the valve part number.

Example 1: 4Z-B6LJ2-SS-**AC61** -- This describes a B6 ball valve with a 90º normally closed spring return actuator.

Example 2: 8Z-B8XJ2-SS-**ADX62** -- This describes a B8 ball valve with a 180º double-acting actuator.

Example 3: 4Z-B6LJ2-SS-**AD61-HT** -- This describes a B6 ball valve with a high temperature 90º double-acting actuator.

Factory Assembled Valves with Actuators, Solenoid Valves, Limit Switches, and other Options

Take the factory assembled valve with actuator part number and **add a suffix** to it based on the following key:

Actuator Accessories: Build your Suffix			
Option	**Designator**		Notes
Breather Block	(Blank)	None	Redirects instrument air into the spring chamber during venting
	B	Included	

Solenoid Valve	(Blank)	None	
Coil Connection	**A**	DIN	Safe Area
	B	1/2 NPT	Safe Area
	D	1/2 NPT	Hazardous Area
Coil Voltage	**1**	24 VDC	
	2	120 VAC	Hazardous Area 60 Hz Only
	3	240 VAC	

Limit Switch	(Blank)	None	
Switch Type	**SB**	SB Box	Safe Area
	SX	SX Box	Hazardous Area

	Valve with Actuator	Accessories	Description
Example 1	4Z-B6LJ2-SS-AC61	**-A1SB**	This describes a B6L ball valve with a 90º normally closed spring return actuator with a **24 VDC** solenoid valve, **DIN** connection, and with a **SB** limit switch. Suitable for safe areas.
Example 2	8Z-B8XJ2-SS-ADX62	**-B2SB**	This describes a B8X ball valve with a 180º double-acting actuator with a 120 VAC solenoid valve, 1/2" NPT connection, and with a SB limit switch. Suitable for safe areas.
Example 3	4Z-HB4LPKR-SS-AC62	**-BD1SX**	This describes a HB4L ball valve with a 90º normally closed spring return actuator with a Breather Block, a 24 VDC solenoid valve, 1/2" NPT connection, and with a SX limit switch. Suitable for hazardous areas.

TOC

How to Order

Actuators Only

Select the corresponding actuator model designation based on the valve series from the Recommended Actuator Table on page 42.

Example 1: **AC62** -- A spring return normally closed 90º actuator standard temperature range.

Example 2: **ADX62** -- A double-acting 180º actuator standard temperature range.

Example 3: **AD61-HT** -- A double-acting 90º actuator high temperature range.

Actuators with Valve Mounting Kits

Specify the valve series and seat material followed by the actuator model designation as determined from the Recommended Actuator Table on page 7.

Example 1: **B6XSPKR-ACX63** -- A spring return 180º actuator standard temperature range with a mounting kit for a B6X ball valve with spring loaded peek seats.

Example 2: **HB4LPKR-AD62** -- A double-acting 90º actuator standard temperature range with a mounting kit for a HB4L ball valve with peek seats.

Example 3: **B8LJ2-AD61-HT** -- A double-acting 90º actuator high temperature range with a mounting kit for a B8L ball valve with PCTFE seats.

Miscellaneous Options

- A dual valve mount is available for specific combinations of valve and actuator models with spring return or double acting 90º and 180º actuators. Contact the factory for specific valve and actuator combinations at ipd.support@support.parker.com.

- Mounting kits, which include brackets, screws and drive couplings are available. Contact the factory for ordering information at ipd.support@support.parker.com.

NOTES

TOC

TOC

Parker **70, 80 and 90 Series Electric Actuators** are designed for electric actuation of Parker's B Series, MB Series, HB Series, and SWB Series Ball Valves. They provide reliable, cost effective, remote valve actuation. The simplicity of design provides accessible and easy wiring installation.

The convenience and accuracy of advanced modular electronics gives the user the ability to wire in accessories without all the hard wiring hassles. The master PC ("mother") board accepts plug-in modular ("daughter") boards to allow for a variety of accessory functions. Other than connecting a power source, there is no internal wiring to tangle with, ever. With a variety of accessories as well as superior actuator design, Parker's Ball Valves with the 70, 80 or 90 Series actuators are the obvious choice.

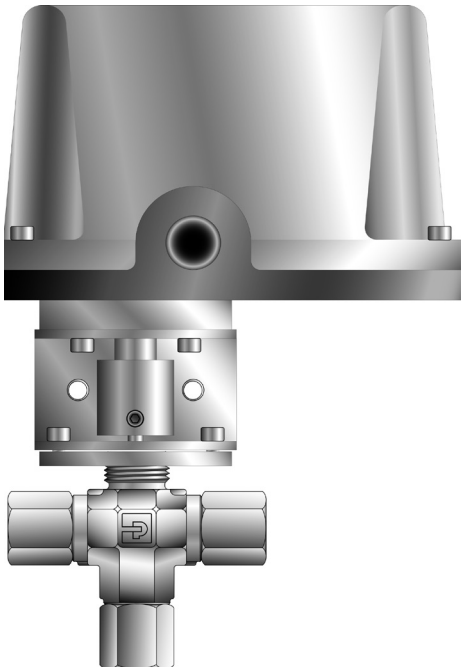

Model Shown:
4F-B6XJ-SS-71XA

70 Series

Specifications

- Voltage: 24, 115 or 230 VAC (50/60 Hz); 12 or 24 VDC
- Torque: 150, 300, 600 in lb (17, 34, 68 N m)
- Enclosure: PVC composite
- Duty cycle: 25% (VAC models); 100% (VDC models)
- Actuator bolt pattern: ISO standard (5211)
- Conduit connection: 1/2" NPT
- Output shaft: Male, zinc plated steel
- Temperature limits (all models): 32°F to 150°F (0°C to 66°C); (-40°F [-40°C] minimum with heater and thermostat)

Features

- Single direction actuation
- PVC cover resists damage/UV radiation NEMA 4 (weatherproof), 4X (weatherproof with corrosion resistance)
- Hardened steel spur gear drive train provides consistent, long life performance
- Permanently lubricated gear train and bearings
- Low profile design/direct drive male output permit limited space installation
- Available for the B Series, MB Series, HB Series and SWB Series ball valves
- Available for two-way (90°) and three-way (180°) configurations
- Approximate weight: 6 lb (2.7 kg)
- Two Limit Switches: Single pole, double throw, rated for 1/3 HP, 10 amps @ 125/230 VAC, CSA certified

Options

- Additional limit switches and cams (specify up to 2)
- Heater and thermostat (For operation to -40°F [-40°C])

70R Series

Specifications

Same as 70 series

Features

Bi-directional (reversing) actuation
Position indicator

Options

Same as 70 Series

Additional Options

Additional limit switches and cams (specify up to 2)

Valve position indication

Materials of Construction

Part	Material
Cover	Composite, PVC
Base	Diecast zinc alloy
Gear Train	Hardened steel
Output Shaft	Zinc plated steel
Finish	Powder coated epoxy

70 Series Dimensional Data

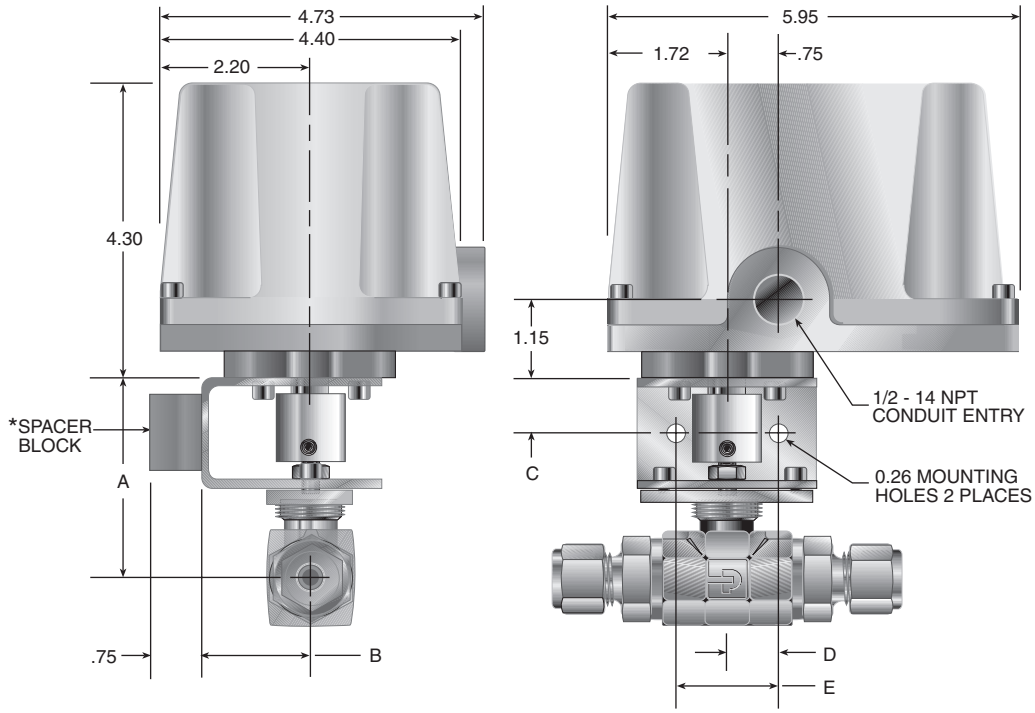

Valve Type	A		B		C		D		E	
	Inch	mm	Inch	mm	Inch	mm	Inch	mm	Inch	mm
B2	2.23	56.6	1.61	40.9	0.80	20.3	0.75	19.1	1.50	38.1
B6	2.49	63.2								
B8	2.91	73.9								
MB2	2.33	59.2								
MB4	2.33	59.2								
MB6	2.48	63.0								
HB4	2.70	68.6								
SWB4	2.57	64.3	1.25	31.7	0.82	20.8				
SWB8	2.79	70.9								
SWB 12	2.95	74.9								
SWB 16	3.14	79.8								

*Spacer block ordered separately, see page 48

Dimensions in inches/millimeters are for reference only, subject to change.

Actuator Model	Breakaway Torque in lb (N m)	Voltage	Duty Cycle	Cycle Time (sec)	Amps at Stall (Nominal)			Weight lb (kg)
					24 VAC	115 VAC	230 VAC	
71	150 (17.0)	24 VAC, 115 VAC or 230 VAC	25%	5	5.2	1.3	0.7	6 (2.7)
72	300 (34.0)			9	7.2	1.8	0.9	
73	600 (67.8)			16	7.2	1.3	0.7	

Actuator Model	Breakaway Torque in lb (N m)	Voltage	Duty Cycle	Cycle Time (sec)		Amps at Running Torque (Nominal)		Approx. Weight
				12 VDC	24 VDC	12 VDC	24 VDC	lb (kg)
72	300 (34.0)	24 VDC	100%	**	6	**	0.5	6 (2.7)
73	600 (67.8)	12 VDC or 24 VDC		16	16	1.3	0.5	

Note: Cycle times reflect 90° rotation. For 180° rotation, double the cycle time.
** 12 VDC not available with this model.

TOC

80 Series

Specifications

- Voltage: 115 or 230 VAC (50/60 Hz)
- Torque: 150, 300, 600 in lb (17, 34, 68 Nm)
- Enclosure: Epoxy coated cast aluminum
- Duty cycle: 75%
- Actuator bolt pattern: ISO standard (5211)
- Conduit connection: 1/2" NPT (2 places)
- Output drive: ISO compatible female drive output
- Temperature limits (all models): 32°F to 150°F (0°C to 66°C); (-40°F [-40°C] minimum with heater and thermostat)

Features

- Bi-directional actuation
- Mother/daughter board, modular electronics technology
- Circuit board readily accepts plug-in connectors
- Variety of plug-in accessory boards are available
- Easy installation, no hard-wiring required
- NEMA 4 (weatherproof), 4X (weatherproof with corrosion resistance), NEMA 7 (explosion proof, gases) & 9 (explosion proof, dust) – Class I, Div. I, Groups C & D; Class II, Div. I, Groups E, F, and G; Class III
- Highly efficient spur gear power train
- Lubrication: Permanently lubricated gear train and bearings
- Manual override
- Visual position indicator
- Available for the B Series, MB Series, HB Series and SWB Series ball valves
- Available for two-way (90°) and three-way (180°) configurations
- Approximate weight: 17 lb (7.7 kg)
- CSA certified (Standard)
- Two Limit Switches: Single pole, double throw, rated for 1/3 HP, 10 amps @ 125/230 VAC, CSA certified

Options

- Additional limit switches and cams (specify up to 2)
- Heater and thermostat (For operation to -40°F [-40°C])
- CSA Certified

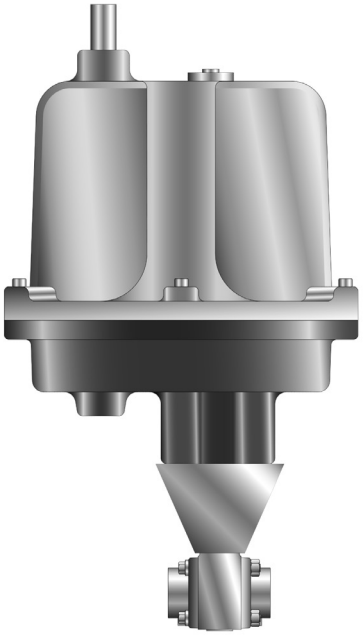

Model Shown:
8W-SWB8L-RT-V-SS-81CS2

Testing

Actuator

All 70 and 80 Series Electric Actuators are factory tested for accurate cycle times and correct output signals at all applicable positions.

Valve

All valves are factory tested for internal and external leakage as described in their respective catalogs.

Valve / Actuator Assemblies

All valve/actuator assemblies are factory tested for proper valve actuation.

Materials of Construction

Part	Material
Cover	Diecast aluminum alloy
Base	Diecast aluminum alloy
Gear Train	Hardened steel
Output Shaft	N/A
Finish	Powder coated epoxy

90 Series

Specifications

- Voltage: Universal Power Board (230, 115, 24 VAC (50/60 Hz); 12 or 24 VDC)
- Torque: 150, 300, 600 in-lb (17, 34, 68 Nm)
- Enclosure: Epoxy coated cast aluminum
- Duty cycle: Continuous (After 1 hour duty cycle is reduced to 80%)
- Actuator bolt pattern: ISO standard (5211)
- Conduit connection: 3/4" NPT (3/4" to 1/2" reducing bushings included)
- Output drive: Square female drive output
- Temperature limits (all models): (-40°F [-40°C] minimum with heater and thermostat)

Features

- Bi-directional actuation
- Mother/daughter board, modular electronics technology
- Circuit board readily accepts plug-in connectors
- Variety of plug-in accessory boards built in
- Easy installation, no hard-wiring required
- Designed to meet NEMA 4 (weatherproof), 4X (weatherproof with corrosion resistance), NEMA 7 (explosion proof, gases) & 9 (explosion proof, dust) – Class I, Div. I, Group C&D; Class II, Div. I, Group E, F, & G; Class III
- Highly efficient spur gear power train
- Lubrication: Permanently lubricated gear train and bearings
- Position feedback and holding brake to prevent back driving all models
- Visual position indicator
- Available for the B Series, MB Series, HB Series, and SWB Series ball valves
- Available for 2-way (90°) and 3-way (180°) configurations
- Approximate weight: 17 lb (7.7 kg); Model 94 weighs 31 lb (14.1 kg)
- CSA certified (Standard)
- Two limit switches: Single pole, double throw, rated for 1/2 HP, 15 amps @ 125 VAC, CSA certified
- Heater and thermostat (For operation to -40° F [-40° C])
- Back-up powered control Board

Testing

Valve

All valves are factory tested for internal and external leakage as described in their respective catalogs.

Valve / Actuator Assemblies

All valve/actuator assemblies are factory tested for proper valve actuation.

Materials of Construction

Part	Material
Cover	Diecast aluminum alloy
Base	Diecast aluminum alloy
Gear Train	Hardened steel
Output Shaft	N/A
Finish	Powder coated epoxy

TOC

80 and 90 Series Dimensional Data

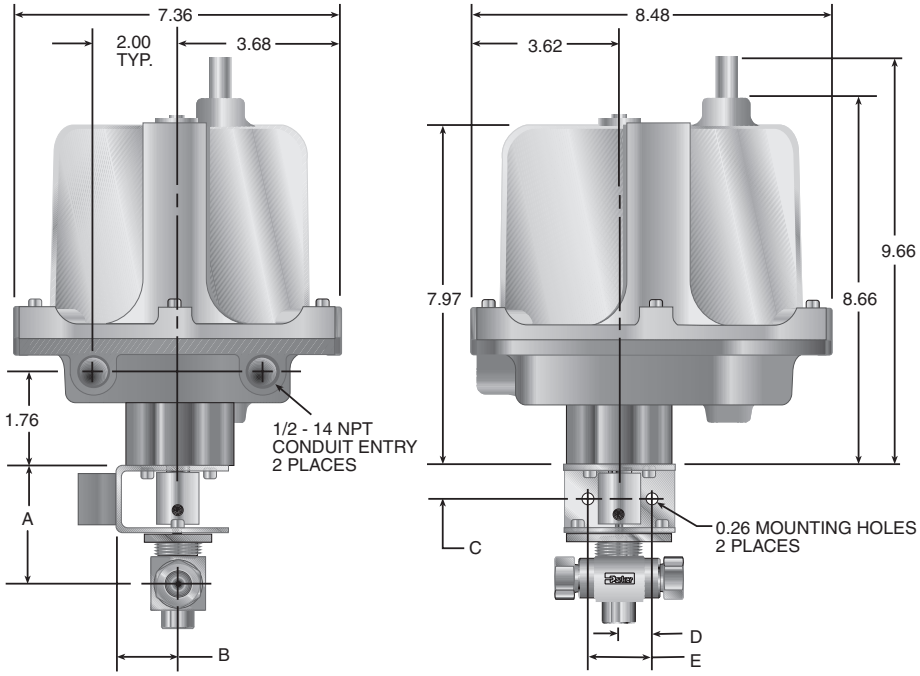

Valve Type	A		B		C		D		E	
	Inch	mm	Inch	mm	Inch	mm	Inch	mm	Inch	mm
B2	2.23	56.6	1.61	40.9	0.80	20.3	0.75	19.1	1.50	38.1
B6	2.49	63.2								
B8	2.91	73.9								
MB2	2.33	59.2								
MB4	2.33	59.2								
MB6	2.48	63.0								
HB4	2.70	68.6								
SWB4	2.57	64.3	1.25	31.7	0.82	20.8				
SWB8	2.79	70.9								
SWB12	2.95	74.9								
SWB16	3.14	79.8								

Actuator Model	Breakaway Torque in lb (Nm)	115 or 230 VAC		
		Cycle Time (sec)	Duty Cycle	Amp** Draw (@115 VAC)
81	150 (17.0)	10	75%	0.3
82	300 (34.0)	15		
83	600 (67.8)	30		

Actuator Model	Breakaway Torque in lb (Nm)	24 VAC		
		Cycle Time (sec)	Duty Cycle	Amp** Draw (@115 VAC)
91	150 (17.0)	5	100%	1.5
92	300 (34.0)	10		
93	600 (67.8)	15		

Actuator Model	Breakaway Torque in lb (Nm)	12 VDC		
		Cycle Time (sec)	Duty Cycle	Amp** Draw (@115 VAC)
91	150 (17.0)	5	100%	1.9
92	300 (34.0)	10		
93	600 (67.8)	15		

Actuator Model	Breakaway Torque in lb (Nm)	24 VDC†		
		Cycle Time (sec)	Duty Cycle	Amp** Draw (@115 VAC)
91	150 (17.0)	3	100%	2.4
92	300 (34.0)	5		
93	600 (67.8)	8		

Note: Cycle times reflect 90° rotation. For 180° rotation, double the cycle time.
**Amps rated at full running torque. Amp draws shown are for 115 VAC and 12VDC only. For other voltages, consult the factory.
†24 VDC cycle time and amp draw are half of 12 VDC.

Duty Cycle: The percentage of time an electric actuator may operate in relation to the time it must rest. It equals "on time" divided by total elapsed time, multiplied by 100. For example, an actuator with a duty cycle of 25% and a cycle time of five seconds must rest for 15 seconds before operating again.

TOC

Actuator Selection Tables

Valve Series	Flow Pattern	Seat Material	Suggested Actuator									
			70 Series					80 Series		90 Series		
			115 VAC	230 VAC	24 VAC	12 VDC	24 VDC	115 VAC	230 VAC	24 VAC	12 VDC	24 VDC
B Series	2-Way	All	71	71	71	73	72	81	81	91	91	91
B Series	3-Way	All	71X	71X	71X	73X	72X	81X	81X	91X	91X	91X
MB Series	2-Way	All	71	71	71	73	72	81	81	91	91	91
MB Series	3-Way	All	71X	71X	71X	73X	72X	81X	81X	91X	91X	91X
HB Series	2-Way	All	71	71	71	73	72	81	81	91	91	91
HB Series	3-Way	All	71X	71X	71X	73X	72X	81X	81X	91X	91X	91X
SWB4	2-Way	All	71	71	71	73	72	81	81	91	91	91
SWB8	2-Way	RT	71	71	71	73	72	81	81	91	91	91
SWB 12	2-Way	RT	71	71	71	73	72	81	81	91	91	91
SWB 16	2-Way	RT	71	71	71	73	72	81	81	91	91	91

How To Order Mounting Bracket Kits

Valve Series	Mounting Bracket Kit Part Numbers		
	70 Series	80 Series	90 Series
B2L	MK-B2L-70	MK-B2L-80	MK-B2L-90
B2X	MK-B2X-70	MK-B2X-80	MK-B2X-90
B6L	MK-B6L-70	MK-B6L-80	MK-B6L-90
B6X	MK-B6X-70	MK-B6X-80	MK-B6X-90
B8L	MK-B8L-70	MK-B8L-80	MK-B8L-90
B8X	MK-B8X-70	MK-B8X-80	MK-B8X-90
MB2L	MK-MB4L-70	MK-MB4L-80	MK-MB4L-90
MB2A	MK-MB4L-70	MK-MB4L-80	MK-MB4L-90
MB2X	MK-MB4X-70	MK-MB4X-80	MK-MB4X-90
MB4L	MK-MB4L-70	MK-MB4L-80	MK-MB4L-90
MB4A	MK-MB4L-70	MK-MB4L-80	MK-MB4L-90
MB4X	MK-MB4X-70	MK-MB4X-80	MK-MB4X-90
MB6L	MK-MB6L-70	MK-MB6L-80	MK-MB6L-90
MB6A	MK-MB6L-70	MK-MB6L-80	MK-MB6L-90
MB6X	MK-MB6X-70	MK-MB6X-80	MK-MB6X-90
HB4L	MK-HB4-70	MK-HB4-80	MK-HB4-90
HB4X	MK-HB4-70	MK-HB4-80	MK-HB4-90
SWB4L	MK-SWB4-70	MK-SWB4-80	MK-SWB4-90
SWB8L	MK-SWB8-70	MK-SWB8-80	MK-SWB8-90
SWB 12L	MK-SWB 12-70	MK-SWB 12-80	MK-SWB 12-90
SWB 16L	MK-SWB 16-70	MK-SWB 16-80	MK-SWB 16-90

Note: Mounting bracket kits include one mounting bracket, one nut plate, one coupling, six socket head cap screws, and two set screws.

If the bracket spacer block is required, order separately using the following nomenclature: SPACER-ACT-.75

How To Order Actuators With Mounting Brackets:

Specify the ball valve series and seat material followed by the actuator.

Examples: B6LJ-71C
MB6XPFA-71RX,
SWB 12LRT-73CS 1

Note: For the SWB Series, actuators can be down sized to fit the application. The actuator selection tables utilize valve combinations at full operating pressures.

How To Order Kits For Field Assembly

Kit Description	70 Series Part Number	80 Series Part Number	90 Series Part Number
Limit Switch (Two-Way Valve)	KIT-LSW-70-2WAY	KIT-LSW-80	KIT-LSW-90
Limit Switch (Three-Way Valve)	KIT-LSW-70-3WAY	KIT-LSW-80	KIT-LSW-90
Heater & Thermostat (115 VAC)*	KIT-HTR-70-115AC	KIT-HTR-80-115AC	KIT-HTR-90-115AC
Heater & Thermostat (230 VAC)*	KIT-HTR-70-230AC	KIT-HTR-80-230AC	KIT-HTR-90-230AC
Heater & Thermostat (24 VAC)*	KIT-HTR-70-24AC	KIT-HTR-80-24AC	KIT-HTR-90-24AC
Positioner (4-20mA, 115 VAC)	Not Available	KIT-POSITIONER-420-115AC	KIT-POSITIONER-420-115AC
Positioner (0-10 VDC, 115 VAC)	Not Available	KIT-POSITIONER-010-115AC	KIT-POSITIONER-010-115AC

*Heater and thermostat for DC voltages are factory installed only.

TOC

How to Order: Field Assembly

Typical part number example: **71-T.** Part number is created based on customer selection of product parameters, see below for example.

***Note:** If the inlet and outlet ports are the same, eliminate the outlet port designator.

The following example describes a Model 71, two-way electric actuator unit with a NEMA 4 and 4X rating, a 115 VAC motor with optional heater and thermostat.

Example 1:

71			–	**T**
Actuator Model	Flow Pattern	Voltage		Options

Actuator Model	Flow Pattern		Voltage		Options	
71	**Blank**	**2-Way**	**Blank**	**115 VAC**	**T**	Heater and Thermostat
72	X	3-Way	A	230 VAC	S#	Additional Limit Switch
73			B	24 VAC		
71R			C	12 VDC	# = Number of Limit Switches required	
72R			D	24 VDC		
73R						
81			Blank	115 VAC		
82			A	230 VAC		
83						

Note: Mounting bracket kits are required when ordering actuators for field assembly.

Example 2:

The following example **91UP**, describes a Model 91, two-way electric actuator unit with universal power supply.

91		**UP**
Actuator Model	Flow Pattern	Voltage

Actuator Model	Torque in-lb (Nm)	Flow Pattern		Voltage	
91	150 (17.0)	**Blank**	2-Way	**UP**	Universal Power Supply
92	300 (34.0)	X	3-Way		
93	600 (67.8)				

Note: Mounting bracket kits are required when ordering actuators for field assembly.

TOC

How to Order: Factory Assembly

Typical part number example: **4Z-MB6XPFA-SS-81XA.**

Part number is created based on customer selection of product parameters, see below for example.
The following example describes a Model 81, three-way electric actuator unit with a NEMA 4, 4X, 7 and 9 rating, a 230 VAC motor and no options, mounted on a MB Series ball valve.

Example 1:

4Z-MB6XPFA-SS	–	**81**	**X**	**A**	–	
Valve Part Number		Actuator Model	Flow Pattern	Voltage		Options

Valve Part Number	Actuator Model	Flow Pattern	Voltage	Options
See "How to Order" Section in the Applicable Vave Series.	71 72 73 71R 72R 73R	Blank 2-Way **X** 3-Way	Blank 115 VAC **A** 230 VAC B 24 VAC C 12 VDC D 24 VDC	**T** Heater and Thermostat S# Additional Limit Switch # = Number of Limit Switches required
	81 82 83		Blank 115 VAC A 230 VAC	

Note: Parker electrically actuated, B Series Ball Valves should be ordered with elastometric stem packing and seals or the optional live-loaded PTFE packing. This reduces the need for any further packing adjustment after receipt from the factory.

Example 2:

The following example **4Z-MB6XPFA-SS-91UP**, describes a Model 91, two-way electric actuator unit with universal power supply, mounted on a MB Series ball valve.

4Z-MB6XPFA-SS	–	**91**		**UP**
Valve Part Number		Actuator Model	Flow Pattern	Voltage

Valve Part Number	Actuator Model	Torque in-lb (Nm)	Flow Pattern	Voltage
See "How to Order" Section in the Applicable Vave Series.	**91** 92 93	150 (17.0) 300 (34.0) 600 (67.8)	**Blank** 2-Way X 3-Way	**UP** Universal Power Supply

Note: Mounting bracket kits are required when ordering actuators for field assembly.

End Connections

TOC

Available End Connections

Standard End Connections:		
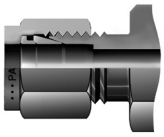		**A -** Two ferrule A-LOK® Compression Port
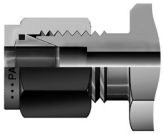		**Z -** Single ferrule CPI™ Compression Port
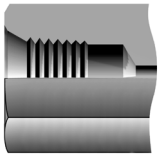		**F -** ANSI/ASME B1.20.1 Internal Pipe Threads
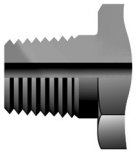		**M -** ANSI/ASME B1.20.1 External Pipe Threads

Non-Standard End Connections: Not available on all valve series. Please consult factory for availability.		
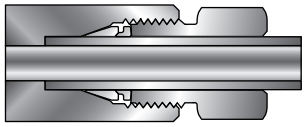		**MP7** - Parker MPI™ (Medium Pressure Inverted) to 15,000 PSI
		L - SAE J1453 Fitting O-ring Face Seal – External Thread with O-ring groove designed to seal with an elastomer against a sleeve
		F5 - SAE J1926/2 Part 2: Heavy-Duty (S Series) Stud Ends
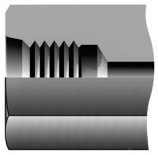		**G5** - SAE J1926/1 Part 1: Threaded Port with O-ring Seal in Truncated Housing

TOC

1. **Definitions. As used herein, the following terms have the meanings indicated.**

"Buyer" means any customer receiving a Quote for Products.

"Buyer's Property" means any tools, patterns, plans, drawings, designs, specifications materials, equipment, or information furnished by Buyer, or which are or become Buyer's property.

"Confidential Information" means any technical, commercial, or other proprietary information of Seller, including, without limitation, pricing, technical drawings or prints and/or part lists, which has been or will be disclosed, delivered, or made available, whether directly or indirectly, to Buyer.

"Goods" means any tangible part, system or component to be supplied by Seller.

"Intellectual Property Rights" means any patents, trademarks, copyrights, trade dress, trade secrets or similar rights.

"Products" means the Goods, Services and/or Software as described in a Quote.

"Quote" means the offer or proposal made by Seller to Buyer for the supply of Products.

"Seller" means Parker-Hannifin Corporation, including all divisions, subsidiaries and businesses selling Products under these Terms.

"Seller's IP" means patents, trademarks, copyrights, or other intellectual property rights relating to the Products, including without limitation, names, designs, images, drawings, models, software, templates, information, any improvements or creations or other intellectual property developed prior to or during the relationship contemplated herein.

"Services" means any services to be provided by Seller.

"Software" means any software related to the Goods, whether embedded or separately downloaded.

"Special Tooling" means equipment acquired by Seller or otherwise owned by Seller necessary to manufacture Goods, including but not limited to tools, jigs,and fixtures.

"Terms" means the terms and conditions of this Offer of Sale.

2. **Terms.** All sales of Products by Seller will be governed by, and are expressly conditioned upon Buyer's assent to, these Terms. These Terms are incorporated into any Quote provided by Seller to Buyer.

Buyer's order for any Products whether communicated to Seller verbally, in writing, by electronic data interface or other electronic commerce, shall constitute acceptance of these Terms. Seller objects to any contrary or additional terms or conditions of Buyer. Reference in Seller's order acknowledgement to Buyer's purchase order or purchase order number shall in no way constitute an acceptance of any of Buyer's terms or conditions of purchase. Any Quote made by Seller to Buyer shall be considered a firm and definite offer and shall not be deemed to be otherwise despite any language on the face of the Quote. Seller reserves all rights to accept or reject any purported acceptance by Buyer to Seller's Quote if such purported acceptance attempts to vary the terms of the Quote.

If Seller ships Products after Buyer issues an acceptance to the Quote, any additional or different terms proposed by Buyer will not become part of the parties' business relationship unless agreed to in a writing that is signed by anauthorized representative of Seller, excluding email correspondence. If the transaction proceeds without such agreement on the part of Seller, the business relationship will be governed solely by these Terms and the specific terms in Seller's Quote

3. **Price; Payment.** The Products set forth in the Quote are offered for sale at the prices indicated in the Quote. Unless otherwise specifically stated in the Quote, prices are valid for thirty (30) days and do not include any sales, use, or other taxes or duties. Seller reserves the right to modify prices for any reason and at any time by giving ten (10) days prior written notice. Unless otherwise specified by Seller, all prices are F.C.A. Seller's facility (INCOTERMS 2020). All sales are contingent upon credit approval and full payment for all purchases is due thirty (30) days from the date of invoice (or such date as may be specified in the Quote). Under any circumstances, Buyer may not withhold or suspend payment of any amounts due and payable as a deduction, set-off or recoupment of any amount, claim or dispute with Seller. Unpaid invoices beyond the specified payment date incur interest at the rate of 1.5% per month or the maximum allowable rate under applicable law. Seller reserves the right to require advance payment or provision of securities for first and subsequent deliveries if there is any doubt, in Seller's sole determination, regarding the Buyer's creditworthiness or for other business reasons. If the requested advance payment or securities are not provided to Seller's satisfaction, Seller reserves the right to suspend performance or reject the purchase order, in whole or in part, without prejudice to Seller's other rights or remedies, including the right to full compensation. Seller may revoke or shorten any payment periods previously granted in Seller's sole determination. The rights and remedies herein reserved to Seller are cumulative and in

TOC

addition to any other or further rights and remedies available at law or in equity. No waiver by Seller of any breach by Buyer of any provision of these terms will constitute a waiver by Seller of any other breach of such provision.

4. **Shipment; Delivery; Title and Risk of Loss.** All delivery dates are approximate, and Seller is not responsible for damages or additional costs resulting from any delay. All deliveries are subject to our ability to procure materials from our suppliers. Regardless of the manner of shipment, delivery occurs and title and risk of loss or damage pass to Buyer, upon placement of the Products with the carrier at Seller's facility. Unless otherwise agreed prior to shipment and for domestic delivery locations only, Seller will select and arrange, at Buyer's sole expense, the carrier and means of delivery. When Seller selects and arranges the carrier and means of delivery, freight and insurance costs for shipment to the designated delivery location will be prepaid by Seller and added as a separate line item to the invoice. Buyer shall be responsible for any additional shipping charges incurred by Seller due to Buyer's acts or omissions. Buyer shall not return or repackage any Products without the prior written authorization from Seller, and any return shall be at the sole cost and expense of Buyer.

5. **Warranty.** The warranty for the Products is as follows: (i) Goods are warranted against defects in material or workmanship for aperiod of twelve (12) months from the date of delivery or 2,000 hours of use,whichever occurs first; (ii) Services shall be performed in accordance with generally accepted practices and using the degree of care and skill that isordinarily exercised and customary in the field to which the Services pertainand are warranted for a period of six (6) months from the date of completion ofthe Services; and (iii) Software is only warranted to perform in accordance with applicable specifications provided by Seller to Buyer for ninety (90) days fromthe date of delivery or, when downloaded by a Buyer or end-user, from thedate of the initial download. All prices are based upon the exclusive limitedwarranty stated above, and upon the following disclaimer:

EXEMPTION CLAUSE; DISCLAIMER OF WARRANTY, CONDITIONS,REPRESENTATIONS: THIS WARRANTY IS THE SOLE AND ENTIRE WARRANTY, CONDITION, AND REPRESENTATION, PERTAINING TO PRODUCTS. SELLER DISCLAIMS ALL OTHER WARRANTIES, CONDITIONS, AND REPRESENTATIONS, WHETHER STATUTORY, EXPRESS OR IMPLIED, INCLUDING BUT NOT LIMITED TO THOSE RELATING TO DESIGN, NONINFRINGEMENT, MERCHANTABILITY, AND FITNESS FOR A PARTICULAR PURPOSE. SELLER DOES NOT WARRANT THAT THE SOFTWARE IS ERROR-FREE OR FAULTTOLERANT, OR THAT BUYER'S USE THEREOF WILL BE SECURE OR UNINTERRUPTED, UNLESS OTHERWISE AUTHORIZED IN WRITING BY SELLER, THE SOFTWARE SHALL NOT BE USED IN CONNECTION WITH HAZARDOUS OR HIGH-RISK ACTIVITIES OR ENVIRONMENTS. EXCEPT AS EXPRESSLY STATED HEREIN, ALL PRODUCTS ARE PROVIDED "AS IS".

6. **Claims; Commencement of Actions.** Buyer shall promptly inspect all Products upon receipt. No claims for shortages will be allowed unless reported to Seller within ten (10) days of delivery. Buyer shall notify Seller of any alleged breach of warranty within thirty (30) days after the date the nonconformance is or should have been discovered by Buyer. Any claim or action against Seller based upon breach of contract or any other theory, including tort, negligence, or otherwise must be commenced within twelve (12) months from the date of the alleged breach or other alleged event, without regard to the date of discovery.

7. **LIMITATION OF LIABILITY. IN THE EVENT OF A BREACH OF WARRANTY, SELLER WILL, AT ITS OPTION, REPAIR OR REPLACE THE NON-CONFORMING PRODUCTS, RE-PERFORM THE SERVICES, OR REFUND THE PURCHASE PRICE PAID WITHIN A REASONABLE PERIOD OF TIME. IN NO EVENT IS SELLER LIABLE FOR ANY SPECIAL, INDIRECT, INCIDENTAL OR CONSEQUENTIAL DAMAGES INCLUDING ANY LOSS OF REVENUE OR PROFITS, WHETHER BASED IN CONTRACT, TORT OR OTHER LEGAL THEORY. IN NO EVENT SHALL SELLER'S LIABILITY UNDER ANY CLAIM MADE BY BUYER EXCEED THE PURCHASE PRICE PAID FOR THE PRODUCTS.**

8. **Confidential Information.** Buyer acknowledges and agrees that Confidential Information has been and will be received in confidence and will remain the property of Seller. Buyer further agrees that it will not use Seller's Confidential Information for any purpose other than for the benefit of Seller and shall return all such Confidential Information to Seller within thirty (30) days upon request.

9. **Loss to Buyer's Property.** Buyer's Property will be considered obsolete and may be destroyed by Seller after two (2) consecutive years have elapsed without Buyer ordering the Products manufactured using Buyer's Property. Also, Seller shall not be responsible for any loss or damage to Buyer's Property while it is in Seller's possession or control.

10. **Special Tooling.** Seller may impose a tooling charge for any Special Tooling. Special Tooling shall be and remain Seller's property. In no event will Buyer acquire any interest in the Special Tooling, even if such Special Tooling has been specially converted or adapted for manufacture of Goods for Buyer and notwithstanding any charges paid by Buyer. Unless otherwise agreed, Seller has the right to alter, discard or otherwise dispose of any Special Tooling or other property owned by Seller in its sole determination at any time.

11. **Security Interest.** To secure payment of all sums due from Buyer, Seller retains a security interest in all Products delivered to Buyer and, Buyer's acceptance of these Terms is deemed to be a Security Agreement under the Uniform Commercial Code. Buyer authorizes Seller as its attorney to execute and file on Buyer's behalf all documents Seller deems necessary to perfect Seller's security interest.

TOC

12. User Responsibility. Buyer, through its own analysis and testing, is solely responsible for making the final selection of the Products and assuring that all performance, endurance, maintenance, safety and warning requirements of the application of the Products are met. Buyer must analyze all aspects of the application and follow applicable industry standards, specifications, and any technical information provided with the Quote or the Products, such as Seller's instructions, guides and specifications. If Seller provides options of or for Products based upon data or specifications provided by Buyer, Buyer is responsible for determining that such data and specifications are suitable and sufficient for all applications and reasonably foreseeable uses of the Products. In the event Buyer is not the end-user of the Products, Buyer will ensure such end-user complies with this paragraph.

13. Use of Products, Indemnity by Buyer. Buyer shall comply with all instructions, guides and specifications provided by Seller with the Quote or the Products. If Buyer uses or resells the Products in any way prohibited by Seller's instructions, guides or specifications, or Buyer otherwise fails to comply with Seller's instructions, guides and specifications, Buyer acknowledges that any such use, resale, or non-compliance is at Buyer's sole risk. Further, Buyer shall indemnify, defend, and hold Seller harmless from any losses, claims, liabilities, damages, lawsuits, judgments and costs (including attorney fees and defense costs), whether for personal injury, property damage, intellectual property infringement or any other claim, arising out of or in connection with: **(a)** improper selection, design, specification, application, or any misuse of Products; **(b)** any act or omission, negligent or otherwise, of Buyer; **(c)** Seller's use of Buyer's Property; **(d)** damage to the Products from an external cause, repair or attempted repair by anyone other than Seller, failure to follow instructions, guides and specifications provided by Seller, use with goods not provided by Seller, or opening, modifying, deconstructing, tampering with or repackaging the Products; or **(e)** Buyer's failure to comply with these Terms, including any legal or administrative proceedings, collection efforts, or other actions arising from or relating to such failure to comply. Seller shall not indemnify Buyer under any circumstance except as otherwise provided in these Terms.

14. Cancellations and Changes. Buyer may not cancel or modify, including but not limited to movement of delivery dates for the Products, any order for any reason except with Seller's written consent and upon terms that will indemnify, defend and hold Seller harmless against all direct, incidental and consequential loss or damage and any additional expense. Seller, at any time, may change features, specifications, designs and availability of Products

15. Assignment. Buyer may not assign its rights or obligations without the prior written consent of Seller.

16. Force Majeure. Seller is not liable for delay or failure to perform any of its obligations by reason of any events or circumstances beyond its reasonable control. Such circumstances include without limitation: accidents, labor disputes or stoppages, government acts or orders, acts of nature, pandemics, epidemics, other widespread illness, or public health emergency, cyber related disruptions, cyber-attacks, ransomware sabotage, delays or failures in delivery from carriers or suppliers, shortages of materials, sudden increases in the price of raw material or components, shutdowns or slowdowns affecting the supply of raw materials or components, or the transportation thereof, oil shortages or oil price increases, energy crisis, energy or fuel interruption, war (whether declared or not) or the serious threat of same, riots, rebellions, acts of terrorism, embargoes, fire or any reason whether similar to the foregoing or otherwise. Seller will resume performance as soon as practicable after the event of force majeure has been removed. All delivery dates affected by an event of force majeure shall be tolled for the duration of such event of force majeure and rescheduled for mutually agreed dates as soon as practicable after the event of force majeure ceases to exist. The right to allocate capacity is in the Seller's sole discretion. An event of force majeure shall not include financial distress, insolvency, bankruptcy, or other similar conditions affecting one of the parties, affiliates and/or subcontractors. An event of force majeure in the meaning of these Terms means any circumstances beyond Seller's control that permanently or temporarily hinders performance, even where that circumstance was already foreseen. Buyer shall not be entitled to cancel any orders following its claim of an event of force majeure.

17. Waiver and Severability. Failure to enforce any provision of these Terms will not invalidate that provision; nor will any such failure prejudice either party's right to enforce that provision in the future. Invalidation of any provision of these Terms shall not invalidate any other provision herein and, the remaining provisions will remain in full force and effect.

18. Duration. Unless otherwise stated in the Quote, any agreement governed by or arising from these Terms shall: (a) be for an initial duration of one (1) year; and (b) shall automatically renew for successive one-year terms unless terminated by Buyer with at least 180-days written notice to Seller or if Seller terminates the agreement pursuant to Section 19 of these Terms.

19. Termination. Seller may, without liability to Buyer, terminate any agreement governed by or arising from these Terms for any reason and at any time by giving Buyer thirty (30) days prior written notice. Seller may immediately terminate, in writing, if Buyer: **(a)** breaches any provision of these Terms, **(b)** becomes or is deemed insolvent, **(c)** appoints or has appointed a trustee, receiver or custodian for all or any part of Buyer's property,**(d)** files a petition for relief in bankruptcy on its own behalf, or one is filed against Buyer by a third party, **(e)** makes an assignment for the benefit of creditors; or **(f)** dissolves its business or liquidates all or a majority of its assets.

TOC

20. Ownership of Software. Buyer agrees that **(a)** Seller (and/or its affiliates) owns or is the valid licensee of Seller's IP and **(b)** the furnishing of information, related documents or other materials by Seller to Buyer does not grant or transfer any ownership interest or license in or to Seller's IP to Buyer, unless expressly agreed in writing. Without limiting the foregoing, Seller retains ownership of all Software supplied to Buyer. In no event shall Buyer obtain any greater right in and to the Software than a right in a license limited to the use thereof and subject to compliance with any other terms provided with the Software. Buyer further agrees that it will not, directly or through intermediaries, reverse engineer, decompile, or disassemble any Software (including firmware) comprising or contained within a Product, except and only to the extent that such activity may be expressly permitted, either by applicable law or, in the case of open source software, the applicable open source license

21. Indemnity for Infringement of Intellectual Property Rights. Seller is not liable for infringement of any Intellectual Property Rights except as provided in this Section. Seller will defend at its expense and will pay the cost of any settlement or damages awarded in an action brought against Buyer based on a third-party claim that one or more of the Products infringes the Intellectual Property Rights of a third party in the country of delivery of the Products by Seller to Buyer. Seller's obligation to defend and indemnify Buyer is contingent on Buyer notifying Seller within ten (10) days after Buyer becomes aware of any such claim, and Seller having sole control over the defense of the claim including all negotiations for settlement or compromise. If one or more Products is subject to such a claim, Seller may, at its sole expense and option, procure for Buyer the right to continue using the Products, replace or modify the Products to render them non-infringing, or offer to accept return of the Products and refund the purchase price less a reasonable allowance for depreciation. Seller has no obligation or liability for any claim of infringement: (i) arising from information provided by Buyer (including Seller's use of Buyer's Property); or (ii) directed to any Products for which the designs are specified in whole or part by Buyer; or (iii) resulting from the modification, combination or use in a system of any Products. The foregoing provisions of this Section constitute Seller's sole and exclusive liability and Buyer's sole and exclusive remedy for claims of infringement of Intellectual Property Rights.

22. Governing Law. These Terms, the terms of any Quote, and the sale and delivery of all Products are deemed to have taken place in, and shall be governed and construed in accordance with, the laws of the State of Ohio, as applicable to contracts executed and wholly performed therein and without regard to conflicts of laws principles. Buyer irrevocably agrees and consents to the exclusive jurisdiction and venue of the courts of Cuyahoga County, Ohio with respect to any dispute, controversy or claim arising out of or relating to the sale and delivery of the Products

23. Entire Agreement. These Terms, along with the terms set forth in the Quote, forms the entire agreement between the Buyer and Seller and constitutes the final, complete and exclusive expression of the terms of sale and purchase. In the event of a conflict between any term set forth in the Quote and these Terms, the terms set forth in the Quote shall prevail. All prior or contemporaneous written or oral agreements or negotiations with respect to the subject matter shall have no effect. No modification to these Terms will be binding on Seller unless agreed to in a writing that is signed by an authorized representative of Seller, excluding email correspondence, 'clickwrap' or other purported electronic assent to different or additional terms. Sections 2-25 of these Terms shall survive termination or cancellation of any agreement governed by or arising from these Terms.

24. No 'Wrap' Agreements/No Authority to Bind Seller's clicking any buttons or any similar action, such as clicking "I Agree" or "Confirm," to utilize Buyer's software or webpage for the placement of orders, is NOT an agreement to Buyer's Terms and Conditions. **NO EMPLOYEE, AGENT OR REPRESENTATIVE OF SELLER HAS THE AUTHORITY TO BIND SELLER BY THE ACT OF CLICKING ANY BUTTON OR SIMILAR ACTION ON BUYER'S WEBSITE OR PORTAL.**

25. Compliance with Laws. Buyer agrees to comply with all applicable laws, regulations, and industry and professional standards, including those of the United States of America, and the country or countries in which Buyer may operate, including without limitation the U.S. Foreign Corrupt Practices Act ("FCPA"), the U.S. Anti-Kickback Act ("Anti-Kickback Act"), U.S. and E.U. export control and sanctions laws ("Export Laws"), the U.S. Food Drug and Cosmetic Act ("FDCA"), and the rules and regulations promulgated by the U.S. Food and Drug Administration ("FDA"), each as currently amended. Buyer agrees to indemnify, defend, and hold harmless Seller from the consequences of any violation of such laws, regulations and standards by Buyer, its employees or agents. Buyer represents that it is familiar with all applicable provisions of the FCPA, the Anti-Kickback Act, Export Laws, the FDCA and the FDA and certifies that Buyer will adhere to the requirements thereof and not take any action that would make Seller violate such requirements. Buyer represents and agrees that Buyer will not make any payment or give anything of value, directly or indirectly, to any governmental official, foreign political party or official thereof, candidate for foreign political office, or commercial entity or person, for any improper purpose, including the purpose of influencing such person to purchase Products or otherwise benefit the business of Seller. Buyer further represents and agrees that it will not receive, use, service, transfer or ship any Products from Seller in a manner or for a purpose that violates Export Laws or would cause Seller to be in violation of Export Laws. Buyer agrees to promptly and reliably provide Seller all requested information or documents, including end-user statements and other written assurances, concerning Buyer's ongoing compliance with Export Law.

09/22

Authorized Distributor
MONILEK OILFIELD

E: sales@monilek.com
W: www.monilekgroup.com

If you have questions about the products contained in this catalog, or their applications, please contact:

Instrumentation Products Division
1005 A Cleaner Way
Huntsville, AL 35805
Ph: **+1 (256) 881-2040**
parker.com/ipd
autoclave.com

Extra care is taken in the preparation of this literature, but Parker is not responsible for any inadvertent typographical errors or omissions. Information in this catalog is only accurate as of the date of publication. All dimensions for reference only and subject to change. For the most current version, please consult the division web site at parker.com/ipd.

WARNING
The products described in this catalog can expose you to chemicals, including Lead, which is known to the State of California to cause cancer and birth defects or other reproductive harm. For more information go to www.p65warnings.ca.gov.

Parker Instrumentation Products Division
Download **Product Literature Hub**

Affiliated Resources: CAD, Literature, Videos and more
Go to Resources

Authorized Distributor
MONILEK OILFIELD

E: sales@monilek.com
W: www.monilekgroup.com

Parker Hannifin Corporation
Instrumentation Products Division
1005 A Cleaner Way
Huntsville, AL 35805 USA
phone 256 881 2040
fax 256 881 5083

parker.com/ipd

MPI™ Series Medium Pressure Compression
Catalog 4234-MA February 2024

© 2024 Parker Hannifin Corporation