Ancillaries and Accessories

4500 Series

Authorized Distributor
MONILEK OILFIELD

MONILEK
OILFIELD

E: sales@monilek.com
W: www.monilekgroup.com

MIDLAND
FLOW LIMITED

Delivering precision flow control instrumentation for more than 60 years

Contents

Section	Page
4500 Range Ancillary Products	**3**
Air pressure switch	3
¼" NPT 3/2 Air pressure switch	4
¼" NPT 5/2 Air pressure switch	5
¼" NPT 3/2 Air pressure switch with latch-lock manual reset	6
½" NPT 3/2 Air pressure switch	7
½" NPT 5/2 Air pressure switch	8
Pressure switch optional accessories	9
¼" to 1" Flow regulators	10
¼" to ½" Uni-directional flow regulators	11
¾" to 1" Uni-directional flow regulators	12
¼" to ½" Bi-directional flow regulators	13
¼" to ½" Needle valves	14
¼" to ½" Needle valves	15
¼" to ½" Exhaust port flow regulators	16
¼" to ½" Exhaust port flow regulators	17
¼" to 2" NPT non-return valve	18
¼" to 2" NPT non-return valves (12 Bar)	19
¼" to ½" NPT Non-return valves (27 Bar)	20
¼" to 2" NPT Quick exhaust valve	21
¼" to 2" NPT Quick exhaust valve	22
¼" to 2" NPT Quick exhaust valve c/w exhaust flow regulator	23
11/2" to 2" NPT Quick exhaust valve c/w exhaust flow regulator & by-pass	24
¼" to 1" NPT Quick exhaust valve c/w exhaust flow regulator	24
¼" to 1" NPT Shuttle valve	25
¼" to ½" Shuttle valve and ¾" to 1" Shuttle valve	26
½" NPT Thermal fuses	27
Visual indicator	28
¼" to ½" Non-return valve breather	29
⅛" to 1" Breathers (silencers)	30
⅛" to ¼" 'Bug screen' port vents	31

Since our founding in 1956, we have been known internationally as one of the oil & gas industries premier designers and manufacturers of 316L stainless steel control equipment. Over the years we have developed an enviable reputation for high quality products, reliability and innovation.

We have the ability to investigate problems and provide comprehensive solutions for the control of hydraulic and pneumatic actuated process control valves across a broad range of industries and markets. This, coupled with repeatedly delivering impressive results worldwide, sets us apart from our competitors.

A compact fully adjustable pneumatically operated 316L stainless steel pressure switch with operating pressures up to 16 bar (232) psi. For use on fail-safe systems.

Features and Benefits

- Specifically designed for severe environments
- Compact and lightweight
- Up to 5 pressure ratings
- Tagging facility
- Fluoroelastomer seals
- 3/2 and 5/2 versions
- Low temperature option available
- NACE standard on application
- PED certified ¼" only

Media and Ambient Temperature Range

- Standard temperature
  -20 to +80 °C (-4 to +176 °F)
- Low temperature version
  -50 to +80 °C (-58 to +176 °F)

Note: When product is ordered as /ATEX ambient temperature is limited to +40 °C (+104 °F) Ex II 2G c T6.

Working Pressure (for main directional valve)

- 12 bar (174 psi) maximum

Maximum Pilot Pressure Inlet

- 10 bar (145 psi)

Pressure Setting Hysteresis

- 0.5 bar (7.25 psi)

Ports NPT (BSP option available)

- ¼" - ½" NPT line port
- ⅛" NPT pilot port

Certification Options Available

Operating Media

- Gases - filtered lubricated or non-lubricated
- Air, inert gas, sweet (natural) gases
- Sour gas option available

Note: To prevent freezing of the condensate within the product, the media dew point must be at least 10 °C below the lowest ambient temperature the product will be exposed to.

Construction Materials

- Body: 316L stainless steel
- Spool: 316L stainless steel
- Spring: 316 stainless steel
- Seals: Fluoroelastomer
  (EPDM[1] on low temperature version)

[1] The use of lubrication upstream of the product is not recommended for low temperature applications.

Maximum Flow

At 6 bar, 1 bar differential:

¼" 3/2 valves - 1000 l/min (35.3 SCFM)

¼" 5/2 valves - 1200 l/min (42.4 SCFM)

½" 3/2 valves - 3500 l/min (123 SCFM)

½" 5/2 valves - 3500 l/min (123 SCFM)

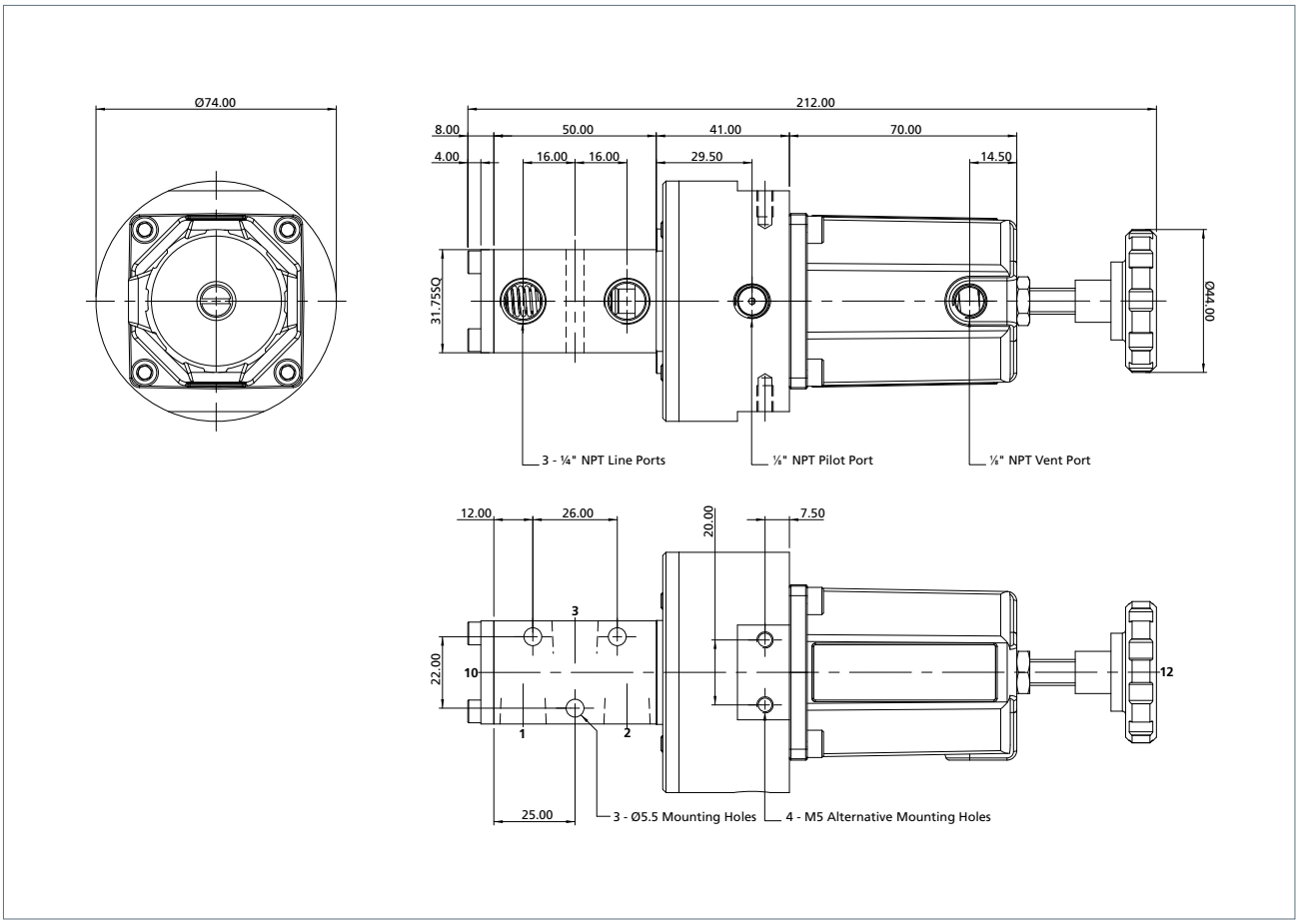

Ordering Information

Product Code	Low Temperature Version	CV	Weight (kg)	Regulated Pressure (Adjustable) for Main Directional Valve
2PS3SV022	2PS3SL022	1.0	1.60	1.0 to 2.0 bar (14.5 to 29 psi)
2PS3SV042	2PS3SL042			1.0 to 4 bar (14.5 to 58 psi)
2PS3SV072	2PS3SL072			1.0 to 7 bar (14.5 to 102 psi)
2PS3SV102	2PS3SL102			1.0 to 10 bar (14.5 to 145 psi)

NOTE: 16 bar regulated pressure must be fed from independent supply to main directional valve.

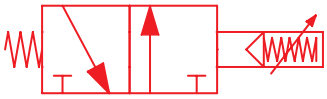

Function

Application for spring-return actuators 3/2

1. Airfail stay put

For this application port 3 is plugged. When pilot air is applied to port 1 or 2 in the Normally Closed mode and pilot air is greater than set pressure, air can flow in either direction. When pilot pressure falls below set pressure the integral spool valve closes and therefore blocks port 1 to 2 and the output from 2 remains blocked, leaving the actuator or downstream signal in the last controlled position.

2. Venting

By not plugging port 3 the valve can be used in the Normally Open, Closed, Diverter or Changeover mode and the actuator will vent to atmosphere.

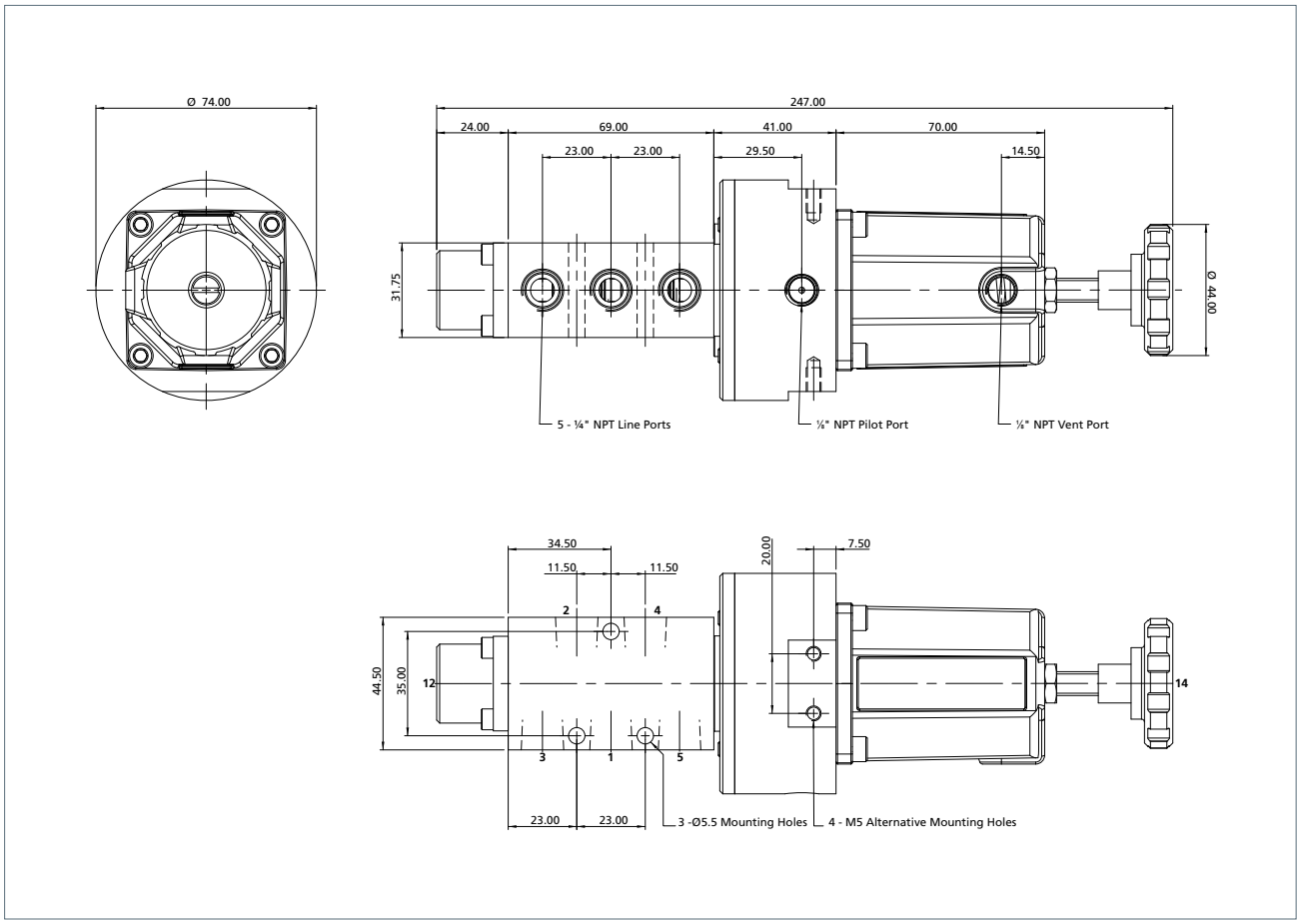

Ordering Information

Product Code	Low Temperature Version	CV	Weight (kg)	Regulated Pressure (Adjustable) for Main Directional Valve
2PS5SV022	2PS5SL022	1.2	2.05	1.0 to 2.0 bar (14.5 to 29 psi)
2PS5SV042	2PS5SL042			1.0 to 4 bar (14.5 to 58 psi)
2PS5SV072	2PS5SL072			1.0 to 7 bar (14.5 to 102 psi)
2PS5SV102	2PS5SL102			1.0 to 10 bar (14.5 to 145 psi)

NOTE: 16 bar regulated pressure must be fed from independent supply to main directional valve.

Function

Application for double-acting actuators 5/2

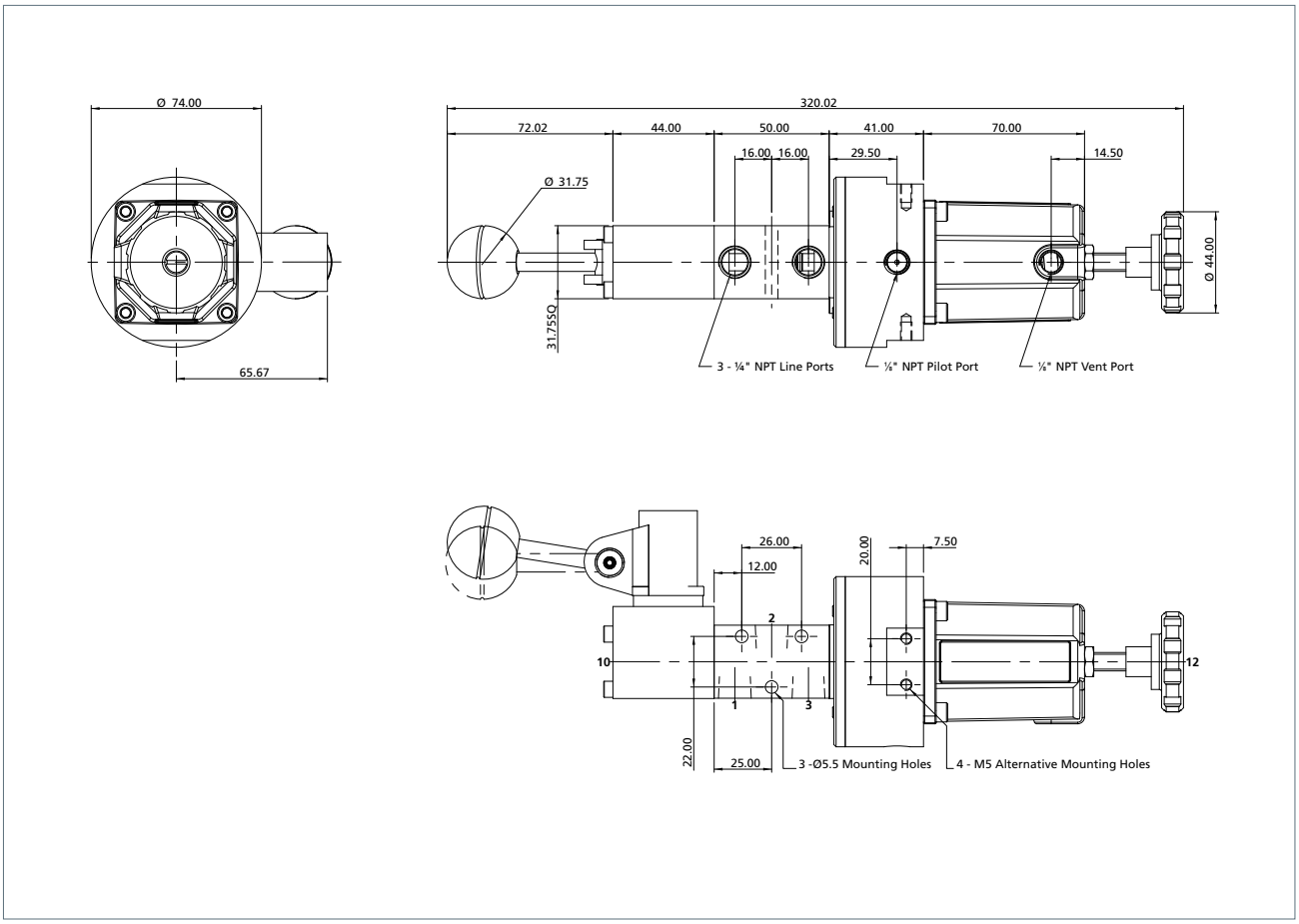

Ordering Information

Product Code	Low Temperature Version	CV	Weight (kg)	Regulated Pressure (Adjustable) for Main Directional Valve
2PS3SV022LL	2PS3SL022LL	1.0	2.30	1.0 to 2.0 bar (14.5 to 29 psi)
2PS3SV042LL	2PS3SL042LL			1.0 to 4 bar (14.5 to 58 psi)
2PS3SL072LL	2PS3SL072LL			1.0 to 7 bar (14.5 to 102 psi)
2PS3SV102LL	2PS3SL102LL			1.0 to 10 bar (14.5 to 145 psi)

NOTE: 16 bar regulated pressure must be fed from independent supply to main directional valve.

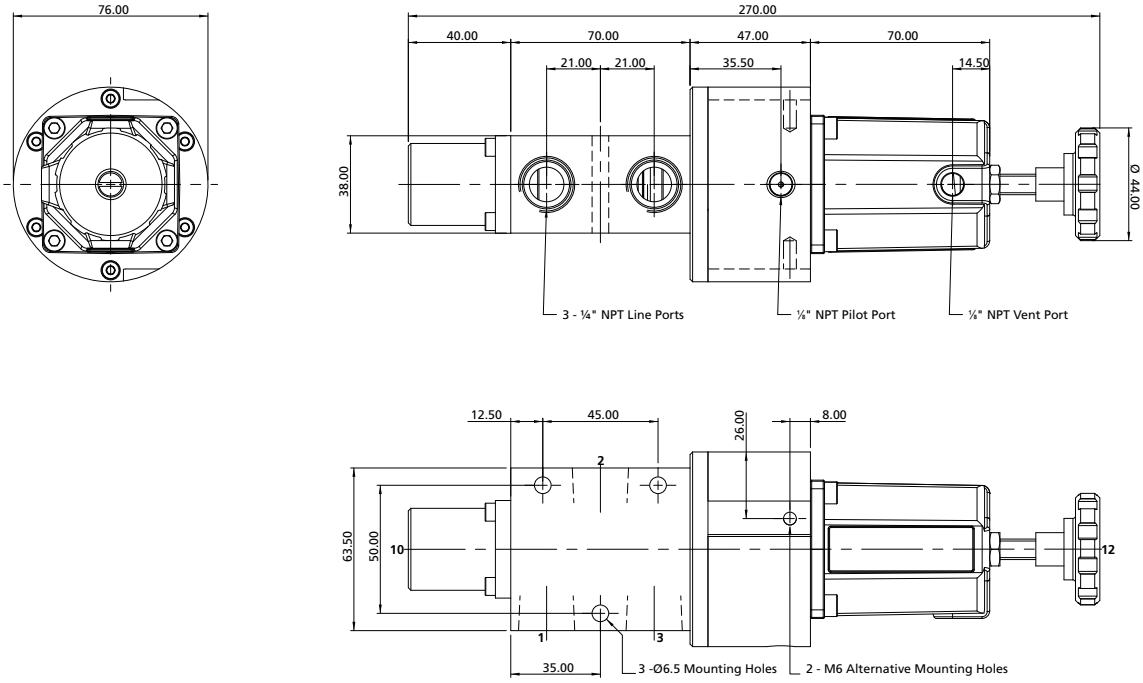

Ordering Information

Product Code	Low Temperature Version	CV	Weight (kg)	Regulated Pressure (Adjustable) for Main Directional Valve
4PS3SV042	4PS3SL042	3.5	3.0	1.0 to 4.0 bar (14.5 to 58 psi)
4PS3SV072	4PS3SL072			1.0 to 7.0 bar (14.5 to 102 psi)
4PS3SV102	4PS3SL102			1.0 to 10 bar (14.5 to 145 psi)

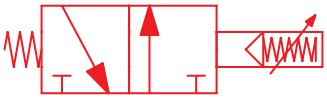

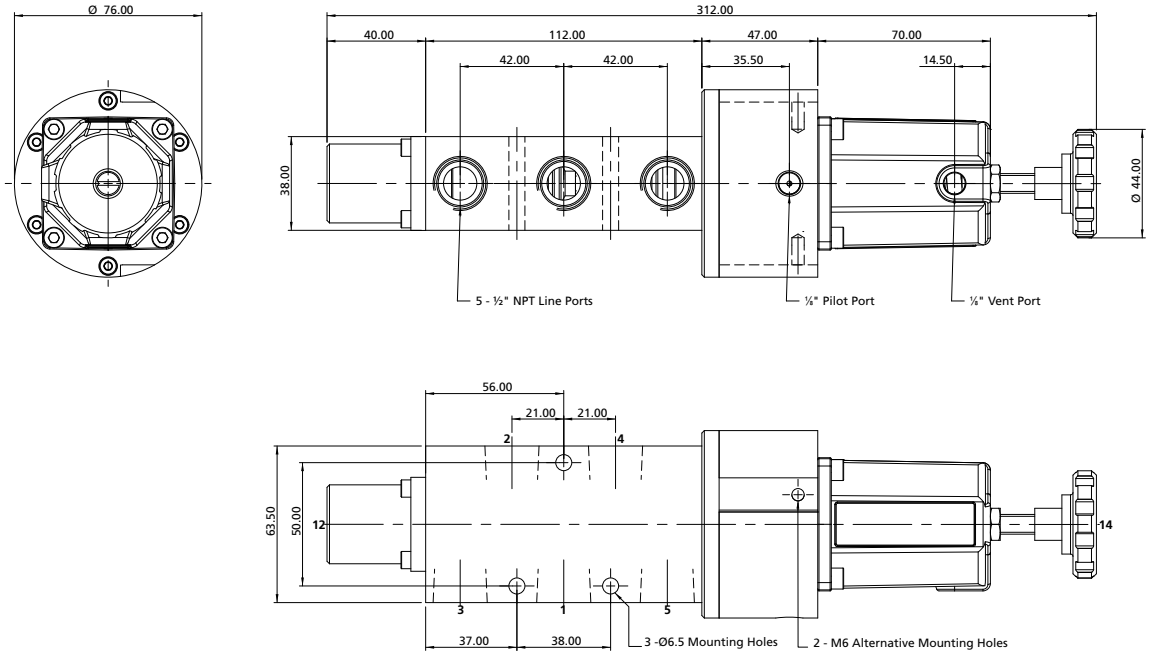

Ordering Information

Product Code	Low Temperature Version	CV	Weight (kg)	Regulated Pressure (Adjustable) for Main Directional Valve
4PS5SV042	4PS5SL042	3.5	3.6	1.0 to 4.0 bar (14.5 to 58 psi)
4PS5SV072	4PS5SL072			1.0 to 7.0 bar (14.5 to 102 psi)
4PS5SV102	4PS5SL102			1.0 to 10 bar (14.5 to 145 psi)

Mounting Bracket

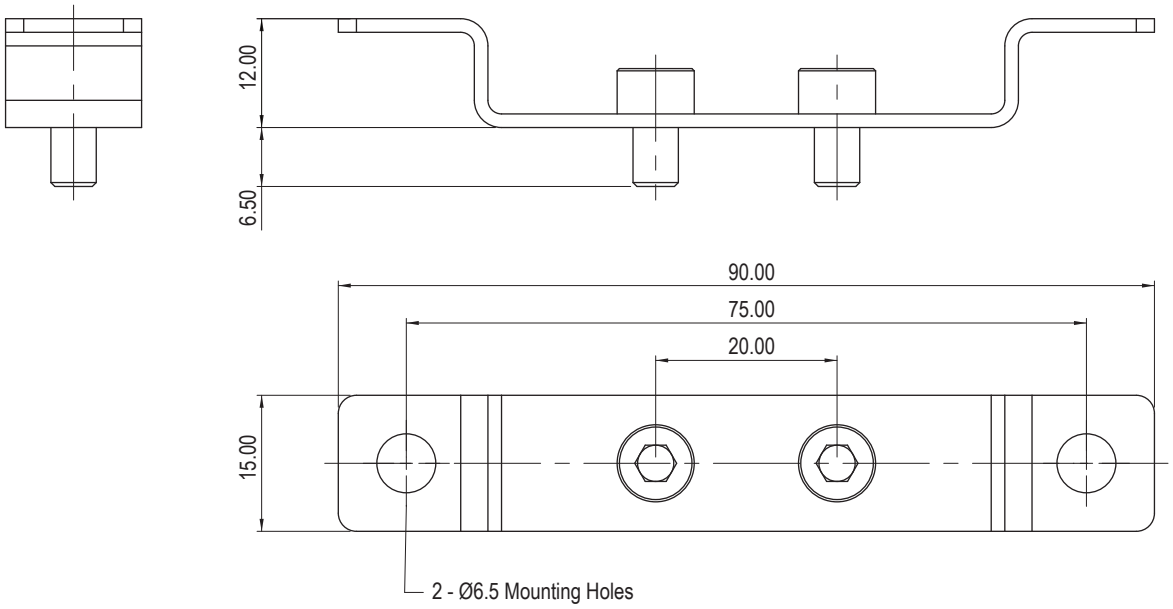

Product Code	Description
SSAF238/26A-1	Mounting bracket

Tamper-proof Cap Kit

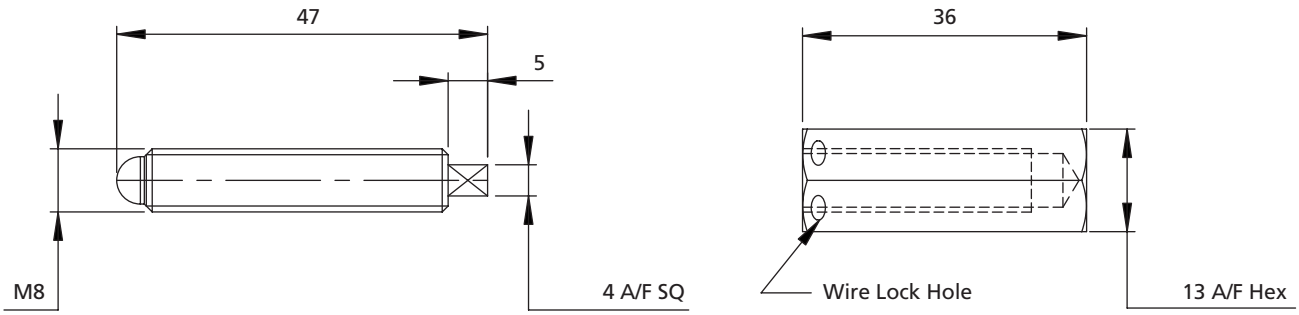

Product Code	Description
SSAF238/22	Kit comprises of 1 pressure adjusting screw and 1 tamperproof cap. All material 316 stainless steel

Uni-directional Flow Regulators:

316L stainless steel in-line flow regulators for uni-directional operation (free flow return).

Bi-directional Flow Regulators:

316 stainless steel in-line flow regulators for bi-directional operation (separate flow control in each direction).

Features and Benefits

- Specifically designed for severe environments
- For use on fail-safe systems
- In-line flow
- Low temperature option available

Media and Ambient Temperature Range

- Standard temperature
  -20 to +70 °C (-4 to +158 °F)
- Low temperature version
  -50 to +80 °C (-58 to +176 °F)

Note: When product is ordered as /ATEX ambient temperature is limited to +40 °C (+104 °F) Ex II 2G c T6.

Working Pressure

- 12 bar (174 psi) maximum

Ports NPT (BSP option available)

Operating Media

- Gases - Filtered lubricated or non-lubricated air, inert gas , sweet (natural) gases
- Sour gas option available
- Liquids - Low pressure hydraulic, mineral oil or water

Note: To prevent freezing of the condensate within the product, the media dew point must be at least 10 °C below the lowest ambient temperature the product will be exposed to.

Construction Materials

- Body: 316L stainless steel
- Spring: 316 stainless steel
- Seals: Nitrile (EPDM[1] on low temperature option)
- Internals: 316L stainless steel

[1] The use of lubrication upstream of the product is not recommended for low temperature applications.

Certification Options Available

CE ATEX

Maximum Flow

At 6 bar, 1 bar differential:

Uni-Directional

- ¼" - 1000 l/min (35 SCFM)
- ⅜" - 1680 l/min (59 SCFM)
- ½" - 2520 l/min (89 SCFM)
- ¾" - 5428 l/min (192 SCFM)
- 1" - 9820 l/min (347) SCFM)

Bi-Directional

- ¼" - 620 l/min (22 SCFM)
- ⅜" - 1290 l/min (45 SCFM)
- ½" - 2000 l/min (71 SCFM)

Uni-directional Flow Regulators

Product Code	Low Temperature Version	Size	CV	Weight (kg)
2REGSN122	2REGSE122	¼"	1.0	0.26
3REGSN122	3REGSE122	⅜"	1.7	0.75
4REGSN122	4REGSE122	½"	2.5	0.75
6REGSN122	6REGSE122	¾"	5.4	1.75
8REGSN122	8REGSE122	1"	9.8	3.1

Bi-directional Flow Regulators

Product Code	Low Temperature Version	Size	CV	Weight (kg)
2BIDSN122	2BIDSE122	¼"	0.6	0.38
3BIDSN122	3BIDSE122	⅜"	1.3	1.0
4BIDSN122	4BIDSE122	½"	2.0	1.0

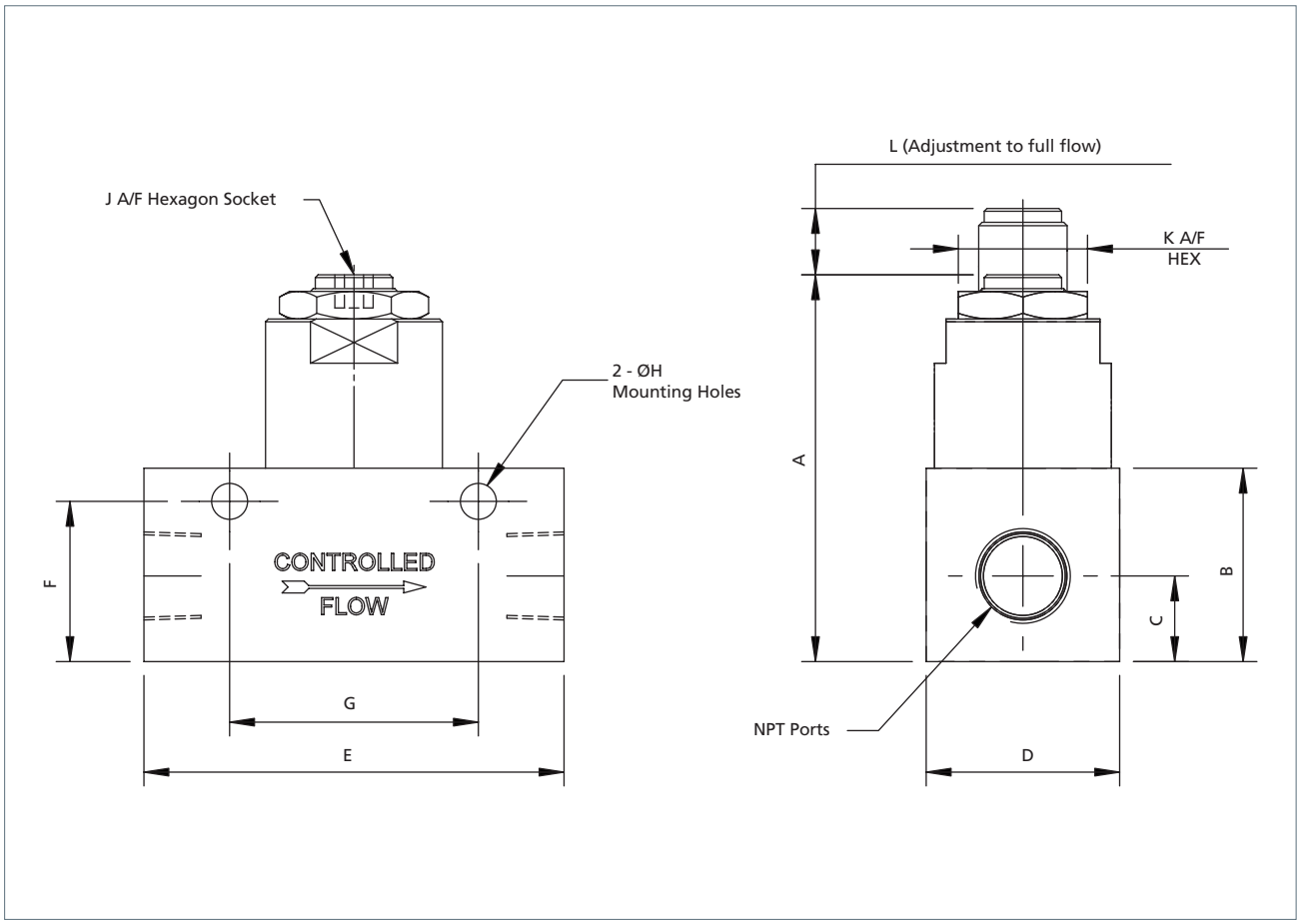

Ordering Information

Product Code	Low Temperature Version	Size	A	B	C	D	E	F	G	H	J	K	L
2REGSN122	2REGSE122	¼"	48	25.4	9	25.4	54	20	40	6.35	5	18	6
3REGSN122	3REGSE122	⅜"	70	35	15.5	35	76	29	45	6.35	6	23.4	12
4REGSN122	4REGSE122	½"	70	35	13.5	35	76	29	45	6.35	6	23.4	12

If ATEX certification is required suffix product code with '/ATEX'.

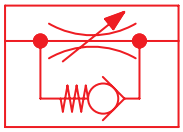

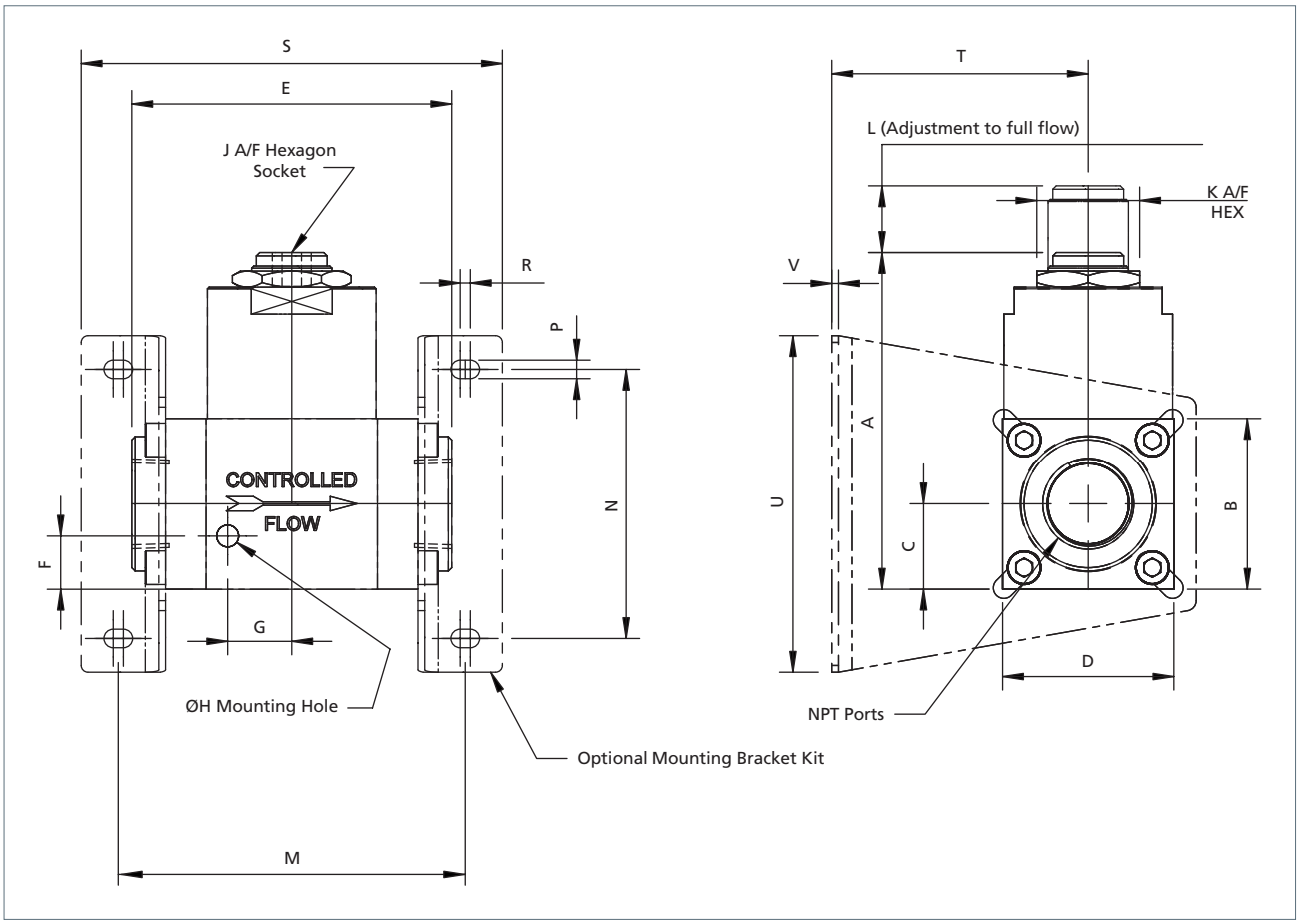

Ordering Information

Product Code	Low Temperature Version	Size	A	B	C	D	E	F	G	H	J	K	L	M	N	P	R	S	T	U	V
6REGSN122	6REGSE122	¾"	100	50.8	25.4	50.8	95	16	19	6.35	10	30.5	20	103	80	5.5	3	125	76	100	2
8REGSN122	8REGSE122	1"	125	63.5	31.75	63.5	107.5	19	24	6.35	12	36	25	115.5	80	5.5	3	137.5	76	100	2

If ATEX certification is required suffix product code with '/ATEX'.

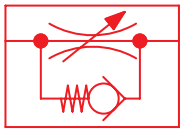

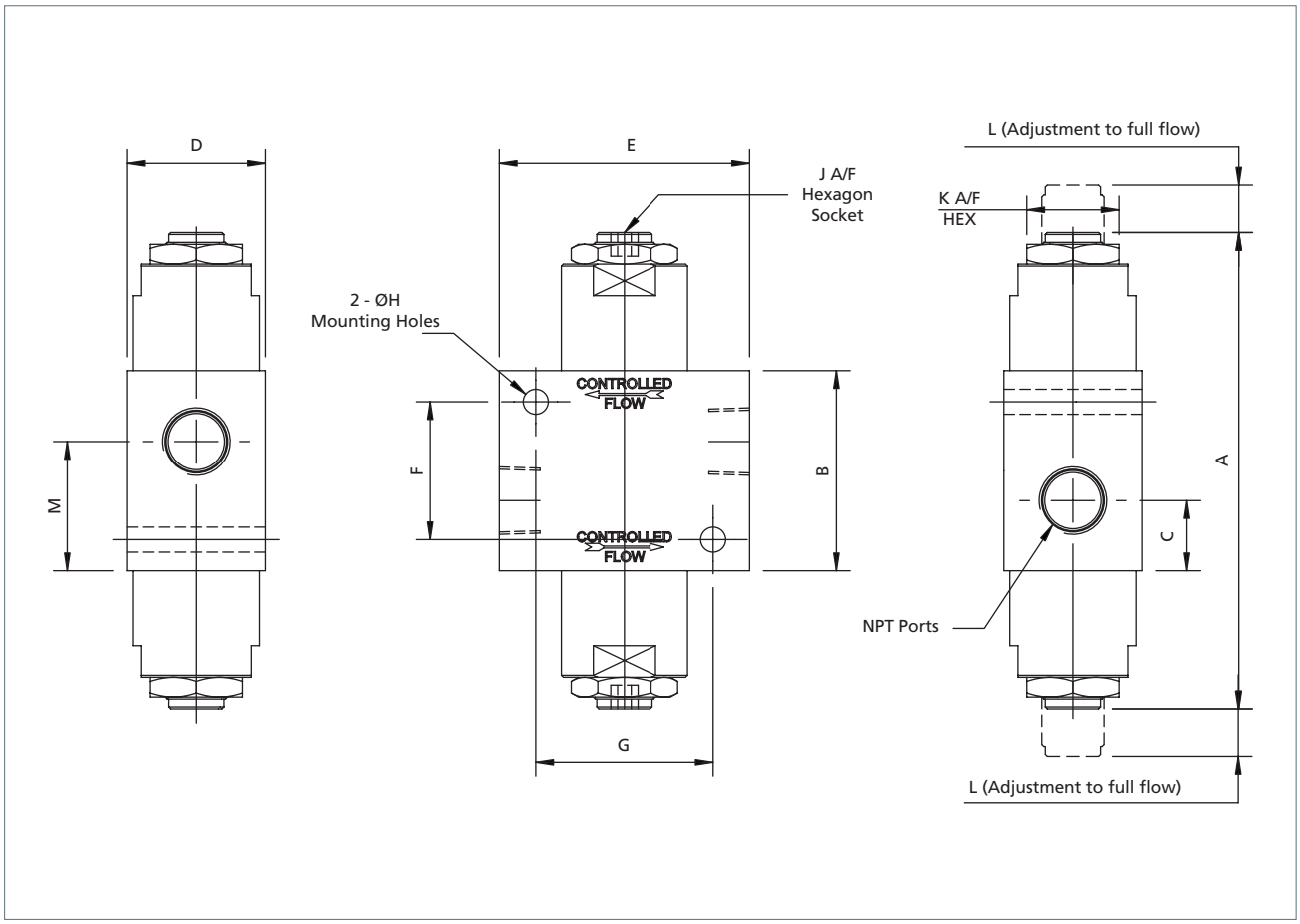

Ordering Information

Product Code	Low Temperature Version	Size	A	B	C	D	E	F	G	H	J	K	L	M
2BIDSN122	2BIDSE122	¼"	85	40	15.5	25.4	44.5	28	32	6.35	5	18	6	24.5
3BIDSN122	3BIDSE122	⅜"	121	51	18	35	63.5	35	45	6.35	6	23.4	12	33
4BIDSN122	4BIDSE122	½"	121	51	21	35	63.5	35	45	6.35	6	23.4	12	30

If ATEX certification is required suffix product code with '/ATEX'.

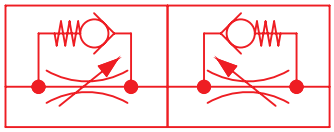

Needle valve: 316L stainless steel needle valve with 3 mm, 6 mm or 12 mm orifice.

Features and Benefits

- Specifically designed for severe environments
- Low temperature option available
- 316L stainless steel

Media and Ambient Temperature Range

- Standard temperature
  -20 to +70 °C (-4 to +158 °F)
- Low temperature version
  -50 to +80 °C (-58 to +176 °F)

Note: When product is ordered as /ATEX ambient temperature is limited to +40 °C (+104 °F) Ex II 2G c T6.

Working Pressure

- 12 bar (174 psi)

Ports NPT (BSP option available)

Operating Media

- Gases - filtered lubricated or non-lubricated
- Air, inert gas, sweet (natural) gases
- Sour gas option available
- Liquids - Low pressure hydraulic, mineral oil or water

Note: To prevent freezing of the condensate within the product, the media dew point must be at least 10 °C below the lowest ambient temperature the product will be exposed to.

Construction Materials

- Body: 316L stainless steel
- Spring: 316 stainless steel
- Seals: Nitrile (EPDM[1] on low temperature option)
- Internals: 316L stainless steel

[1] The use of lubrication upstream of the product is not recommended for low temperature applications.

Maximum Flow

At 6 bar, 1 bar differential:

Needle valve (3 mm orifice)

- ¼" - 290 l/min (10.5 SCFM)

Needle valve (6 mm orifice)

- ¼" - 640 l/min (23 SCFM)

Needle valve (12 mm orifice)

- ½" - 2240 l/min (79 SCFM)

Product Code	Low Temperature Version	Size	Orifice (mm)	CV	Weight (kg)
2NDVSN12203	2NDVSE12203	¼"	3	0.3	0.27
2NDVSN12206	2NDVSE12206	¼"	6	0.7	0.27
4NDVSN12206	4NDVSE12206	½"	6	1.1	0.71
4NDVSN12212	4NDVSE12212	½"	12	2.8	0.71

Certification Options Available

CE ATEX

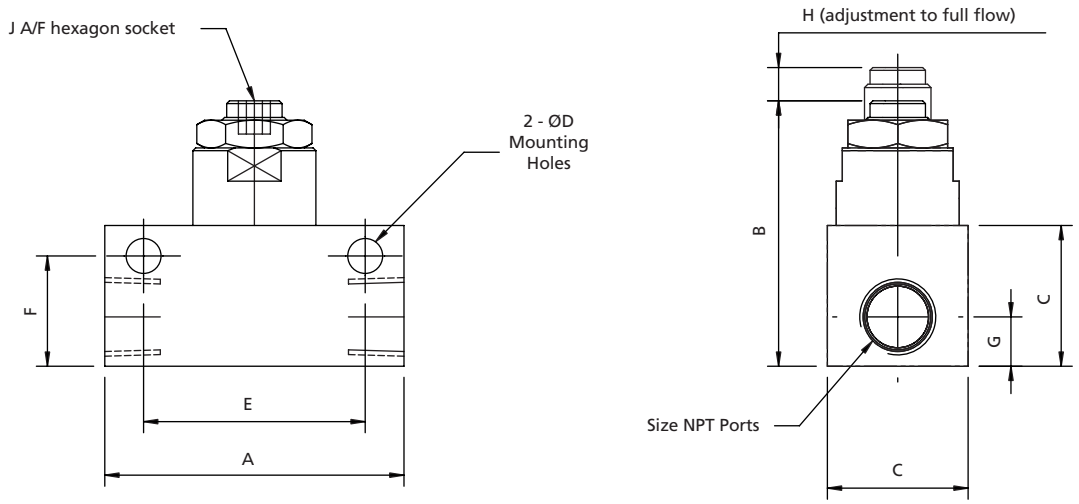

Ordering Information

Product Code	Low Temperature Version	Size	A	B	C	D	E	F	G	H	J
2NDVSN12203	2NDVSE12203	¼"	54	48	25.4	6.35	40	20	9	6	5
2NDVSN12206	2NDVSE12206	¼"	54	48	25.4	6.35	40	20	9	6	5
4NDVSN12206	4NDVSE12206	½"	76	70	35	6.35	45	29	13.5	12	6
4NDVSN12212	4NDVSE12212	½"	76	70	35	6.35	45	29	13.5	12	6

If ATEX certification is required suffix product code with '/ATEX'.

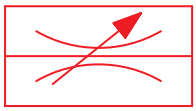

Exhaust port flow regulators: 316L stainless steel exhaust flow regulator/breather supplied complete with tamper proof cap.

Features and Benefits

- Specifically designed for severe environments
- Low temperature option available
- 316L stainless steel

Media and Ambient Temperature Range

- Standard temperature
  -20 to +70 °C (-4 to +158 °F)
- Low temperature version
  -50 to +80 °C (-58 to +176 °F)

Working Pressure

- 12 bar (174 psi)

Operating Media

- Gases - filtered lubricated or non-lubricated
- Air, inert gas, sweet (natural) gases
- Sour gas option available
- Liquids - Low pressure hydraulic, mineral oil or water

Note: To prevent freezing of the condensate within the product, the media dew point must be at least 10 °C below the lowest ambient temperature the product will be exposed to.

Construction Materials

- Body: 316L stainless steel
- Spring: 316 stainless steel
- Seals: Nitrile (EPDM[1] on low temperature option)
- Internals: 316L stainless steel

[1] The use of lubrication upstream of the product is not recommended for low temperature applications.

Maximum Flow

At 6 bar, 1 bar differential:

Exhaust port flow regulators

- ¼" - 646 l/min (23 SCFM)
- ⅜" - 1100 l/min (39 SCFM)
- ½" - 1800 l/min (64 SCFM)

Product Code	Low Temperature Version	Size	CV	Weight (kg)
2EFRSN102	2EFRSE122	¼"	0.65	0.06
3EFRSN102	3EFRSE122	⅜"	1.1	0.15
4EFRSN102	4EFRSE122	½"	1.8	0.22

Certification Options Available

CE ATEX

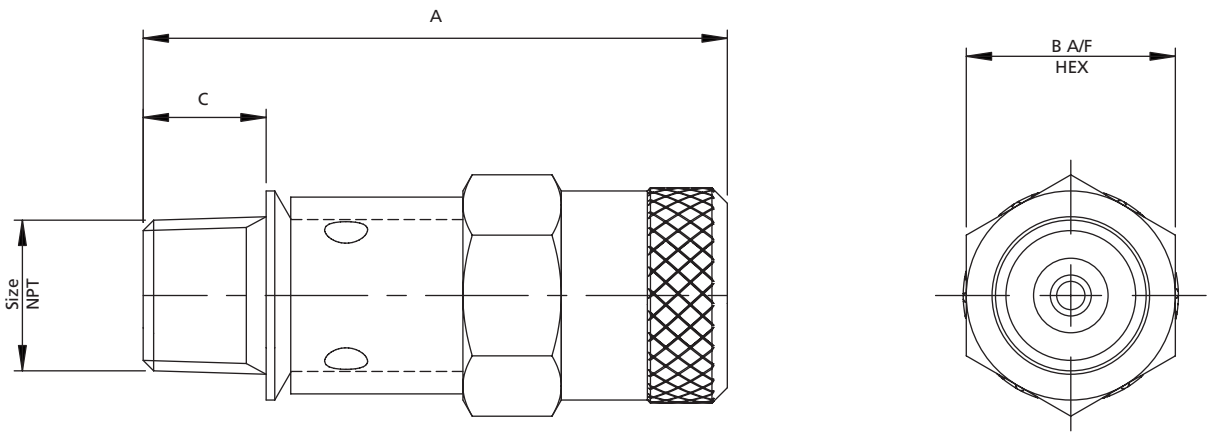

Ordering Information

Product Code	Low Temperature Version	Size	A	B	C
2EFRSN102	2EFRSE102	¼"	47.5	17	10
3EFRSN102	3EFRSE102	⅜"	66	23.4	12.5
4EFRSN102	4EFRSE102	½"	87	23.4	17

316L stainless steel non-return valves for pressures up of 12 bar (174 psi) and 27 bar (391 psi).

Features and Benefits

- Specifically designed for severe environments
- Low temperature option available
- 316L stainless steel

Media and Ambient Temperature Range

- Standard temperature
  -20 to +70 °C (-4 to +158 °F)
- Low temperature version
  -50 to +80 °C (-58 to +176 °F)

Note: When product is ordered as /ATEX ambient temperature is limited to +40 °C (+104 °F) Ex II 2G c T6.

Working Pressure

- 12 bar (174 psi)
- 27 bar (391 psi)

Ports NPT (BSP option available)

Operating Media

- Gases - filtered lubricated or non-lubricated
- Air, inert gas, sweet (natural) gases
- Sour gas option available
- Liquids - Low pressure hydraulic, mineral oil or water

Note: To prevent freezing of the condensate within the product, the media dew point must be at least 10 °C below the lowest ambient temperature the product will be exposed to.

Construction Materials

- Body: 316L stainless steel
- Spring: 316 stainless steel
- Seals: Nitrile (EPDM[1] on low temperature option)
- Internals: 316L stainless steel

[1] The use of lubrication upstream of the product is not recommended for low temperature applications.

Certification Options Available

CE ATEX

Maximum Flow

At 6 bar, 1 bar differential:

Non-return valves (12 bar)

- ¼" - 1600 l/min (57 SCFM)
- ⅜" - 2200 l/min (80 SCFM)
- ½" - 3800 l/min (137 SCFM)
- ¾" - 5800 l/min (205 SCFM)
- 1" - 7700 l/min (274 SCFM)

Non-return valves (27 bar)

- ¼" - 736 l/min (26 SCFM)
- ⅜" - 1840 l/min (65 SCFM)
- ½" - 2600 l/min (91 SCFM)

Non-return Valves 12 Bar

Product Code	Low Temperature Version	Size	CV	Weight (kg)
2NRVSN122	2NRVSE122	¼"	1.6	0.10
3NRVSN122	3NRVSE122	⅜"	2.3	0.26
4NRVSN122	4NRVSE122	½"	3.9	0.24
6NRVSN122	6NRVSE122	¾"	5.8	0.74
8NRVSN122	8NRVSE122	1"	7.8	0.66
7NRVSN122	7NRVSE122	1½"	28	6.65
9NRVSN122	9NRVSE122	2"	49	6.25

Non-return Valves 27 Bar

Product Code	Low Temperature Version	Size	CV	Weight (kg)
2NRVSN272	2NRVSE272	¼"	0.74	0.10
3NRVSN272	3NRVSE272	⅜"	1.9	0.26
4NRVSN272	4NRVSE272	½"	2.6	0.24

¼" to ½" Non-Return Valves (12 bar)

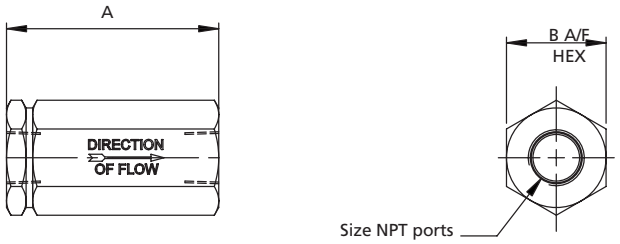

¾" to 1" Non-Return Valves (12 Bar)

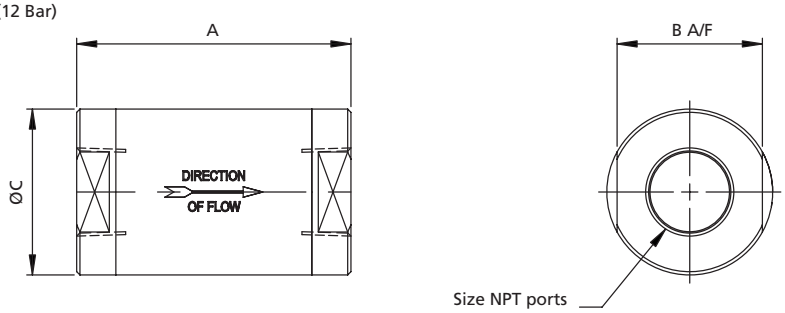

1½" to 2" Non-Return Valves (12 Bar)

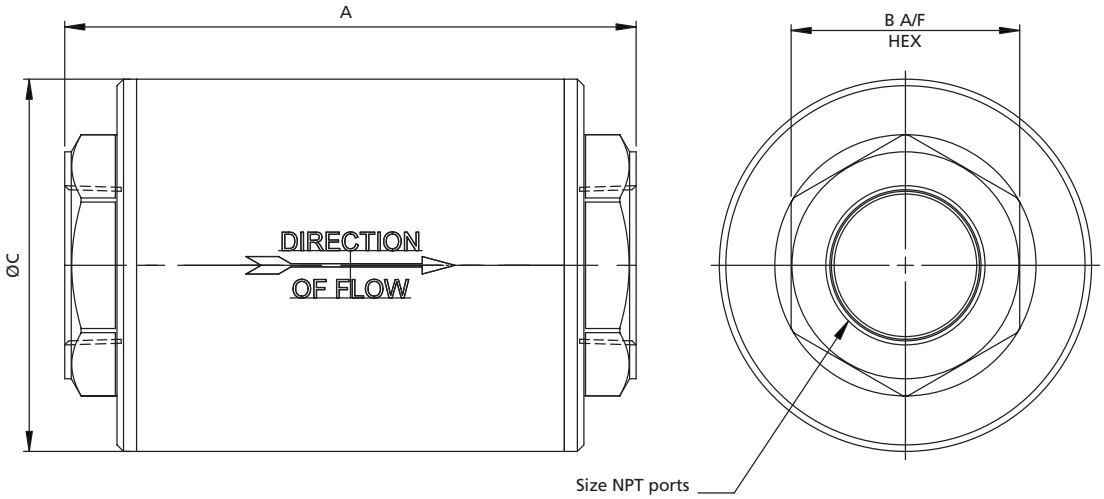

Ordering Information

Product Code	Low Temperature Version	Size	A	B	C
2NRVSN122	2NRVSE122	¼"	50	22.2	-
3NRVSN122	3NRVSE122	⅜"	65	30.5	-
4NRVSN122	4NRVSE122	½"	68	30.5	-
6NRVSN122	6NRVSE122	¾"	84	44.5	51
8NRVSN122	8NRVSE122	1"	84	44.5	51
7NRVSN122	7NRVSE122	1½"	175	70	114
9NRVSN122	9NRVSE122	2"	175	70	114

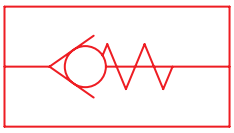

If ATEX certification is required suffix product code with '/ATEX'.

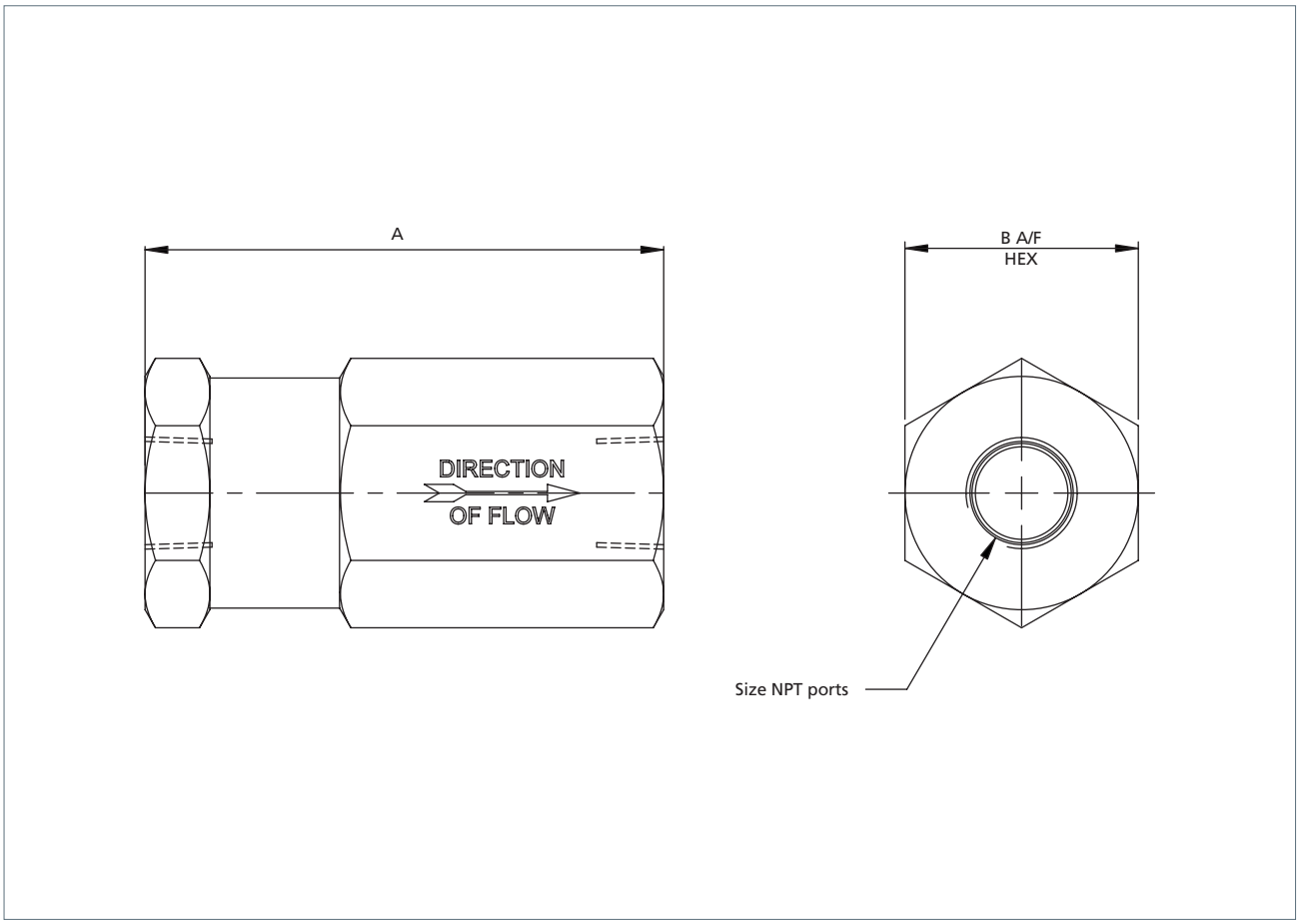

Ordering Information

Product Code	Low Temperature Version	Size	A	B
2NRVSN272	2NRVSE272	¼"	50	22.2
3NRVSN272	3NRVSE272	⅜"	80	36
4NRVSN272	4NRVSE272	½"	90	36

If ATEX certification is required suffix product code with '/ATEX'.

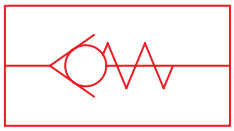

316L stainless steel quick exhaust valves.

Features and Benefits

- Specifically designed for severe environments
- Low temperature option available

Media and Ambient Temperature Range

- Standard temperature
  -20 to +70 °C (-4 to +158 °F)
- Low temperature version
  -50 to +80 °C (-58 to +176 °F)

Note: When product is ordered as /ATEX ambient temperature is limited to +40 °C (+104 °F) Ex II 2G c T6.

Working Pressure

- 12 bar (174 psi)

Operating media

- Gases - filtered lubricated or non-lubricated
- Air, inert gas, sweet (natural) gases
- Sour gas option available
- Liquids - Low pressure hydraulic, mineral oil or water

Note: To prevent freezing of the condensate within the product, the media dew point must be at least 10 °C below the lowest ambient temperature the product will be exposed to.

Maximum Flow

At 6 bar, 1 bar differential:

Supply to outlet

- ¼" - 1290 l/min (46 SCFM)
- ⅜" - 1810 l/min (64 SCFM)
- ½" - 3810 l/min (135 SCFM)
- ¾" - 4520 l/min (160 SCFM)
- 1" - 7700 l/min (274 SCFM)
- 1½" - 22000 l/min (777 SCFM)
- 2" - 32000 l/min (1130 SCFM)

Outlet to exhaust

- ¼" - 2780 l/min (98 SCFM)
- ⅜" - 3810 l/min (135 SCFM)
- ½" - 5490 l/min (194 SCFM)
- ¾" - 6460 l/min (228 SCFM)
- 1" - 11000 l/min (388 SCFM)
- 1½" - 32000 l/min (1130 SCFM)
- 2" - 45000 l/min (1589 SCFM)

Construction Materials

- Body: 316L stainless steel
- Internals: 316L stainless steel
- Springs: 316 stainless steel
- Seals: Nitrile (EPDM[1] on low temperature option)

[1] The use of lubrication upstream of the product is not recommended for low temperature applications.

Product Code	Low Temperature Version	Size	CV Supply to Outlet	CV Outlet to Exhaust
2QEVSN122	2QEVSE122	¼"	1.3	2.8
3QEVSN122	3QEVSE122	⅜"	1.8	3.8
4QEVSN122	4QEVSE122	½"	3.8	5.5
6QEVSN122	6QEVSE122	¾"	4.5	6.5
8QEVSN122	8QEVSE122	1"	7.8	11.0
7QEVSN122	7QEVSE122	1½"	22.0	32.0
9QEVSN122	9QEVSE122	2"	32.0	45.0

Certification Options Available

CE ATEX

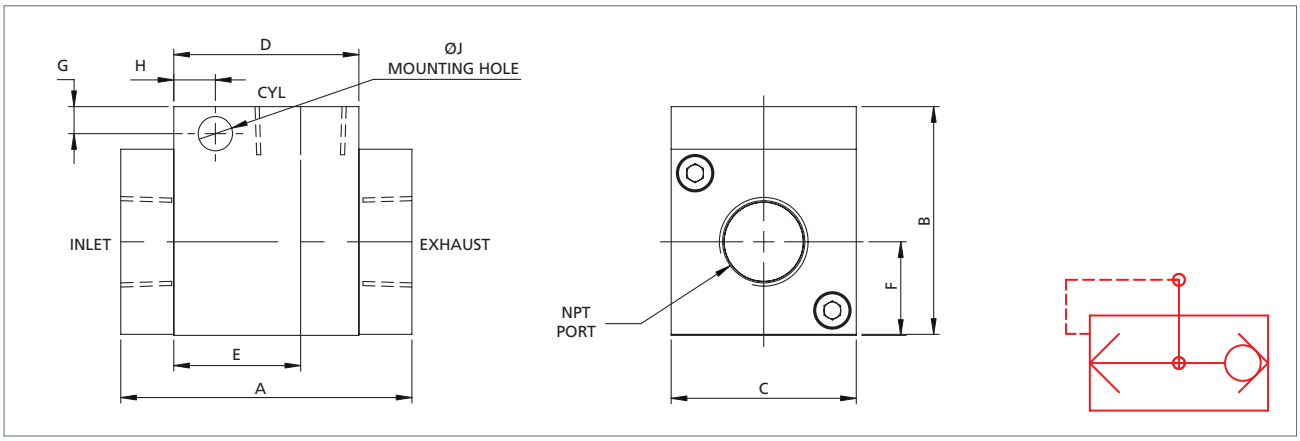

Ordering Information

Product Code	Low Temperature Version	Size	A	B	C	D	E	F	G	H	J
2QEVSN122	2QEVSE122	¼"	52	38	31.75	31.75	22	16	-	-	-
3QEVSN122	3QEVSE122	⅜"	60	42	35	35	23	17.5	-	-	-
4QEVSN122	4QEVSE122	½"	70	55	44.5	44.5	30.5	22.5	6.5	10	8.25
6QEVSN122	6QEVSE122	¾"	80	60	50.8	50.8	33.5	25.4	7.5	10	8.5
8QEVSN122	8QEVSE122	1"	106.2	91	76.2	76.2	52.2	38.1	10	16	11

If ATEX certification is required suffix product code with '/ATEX'.

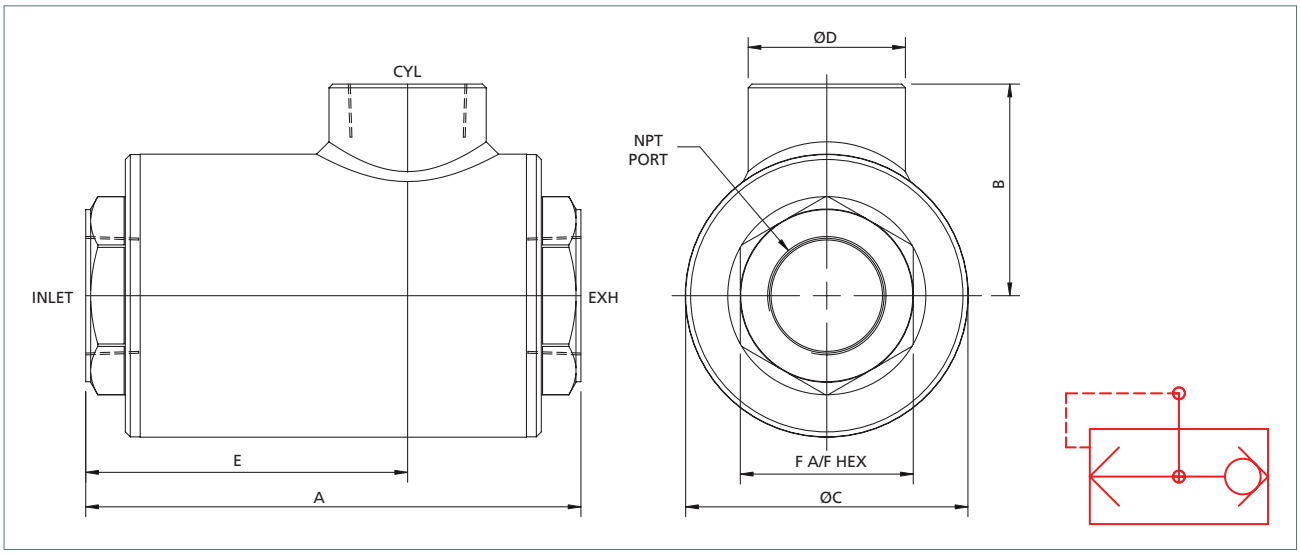

Ordering Information

Product Code	Low Temperature Version	Size	A	B	C	D	E	F
7QEVSN122	7QEVSE122	1½"	200	85.5	114	63.5	130	70
9QEVSN122	9QEVSE122	2"	200	85.5	114	76	130	70

316L stainless steel quick exhaust valves complete with flow regulators to control the speed of exhaust.

Features and Benefits

- Specifically designed for severe environments
- Low temperature option available

Media and Ambient Temperature Range

- Standard temperature
  -20 to +70 °C (-4 to +158 °F)
- Low temperature version
  -50 to +80 °C (-58 to +176 °F)

Working Pressure

- Quick exhaust valve c/w flow regulator
  12 bar (174 psi)

Operating Media

- Gases - filtered lubricated or non-lubricated
- Air, inert gas, sweet (natural) gases
- Sour gas option available
- Liquids - Low pressure hydraulic, mineral oil or water

Note: To prevent freezing of the condensate within the product, the media dew point must be at least 10 °C below the lowest ambient temperature the product will be exposed to.

Maximum Flow

At 6 bar, 1 bar pressure drop:

Quick exhaust valve c/w flow regulator

Supply to outlet

- ¼" - 1290 l/min (46 SCFM)
- ⅜" - 1810 l/min (64 SCFM)
- ½" - 3810 l/min (135 SCFM)
- ¾" - 4520 l/min (160 SCFM)
- 1" - 7700 l/min (274 SCFM)
- 1½" - 22000 l/min (777 SCFM)
- 2" - 32000 l/min (1130 SCFM)

Quick exhaust valve c/w Flow Regulator

Outlet to exhaust

- ¼" - 2780 l/min (98 SCFM)
- ⅜" - 3810 l/min (135 SCFM)
- ½" - 5490 l/min (194 SCFM)
- ¾" - 6460 l/min (228 SCFM)
- 1" - 11000 l/min (388 SCFM)
- 1½" - 32000 l/min (1130 SCFM)
- 2" - 45000 l/min (1589 SCFM)

Construction Materials

- Body: 316L stainless steel
- Internals: 316L stainless steel
- Springs: 316 stainless steel
- Seals: Nitrile (EPDM[1] on Low temperature option)

[1] The use of lubrication upstream of the product is not recommended for low temperature applications.

¼" to 1" Quick Exhaust Valve with Exhaust Flow Regulator and Bypass

Standard Product Code with by-pass	Low Temperature Version with by-pass	Size	CV Supply to Outlet	CV Outlet to Exhaust	Weight (kg)
2QEBSN122	2QEBSE122	¼"	1.3	2.8	0.5
3QEBSN122	3QEBSE122	⅜"	1.8	3.8	0.7
4QEBSN122	4QEBSE122	½"	3.8	5.5	1.7
6QEBSN122	6QEBSE122	¾"	4.5	6.5	2.4
8QEBSN122	8QEBSE122	1"	7.8	11	6

1½" to 2" Quick Exhaust Valve with Exhaust Flow Regulator and Bypass

Standard Product Code	Low Temperature Version	Size	CV Supply to Outlet	CV Outlet to Exhaust	Weight (kg)
7QEBSN122A	7QEBSE122A	1½"	22	32	13.4
9QEBSN122A	9QEBSE122A	2"	32	46	13.4

Certification Options Available

CE ATEX

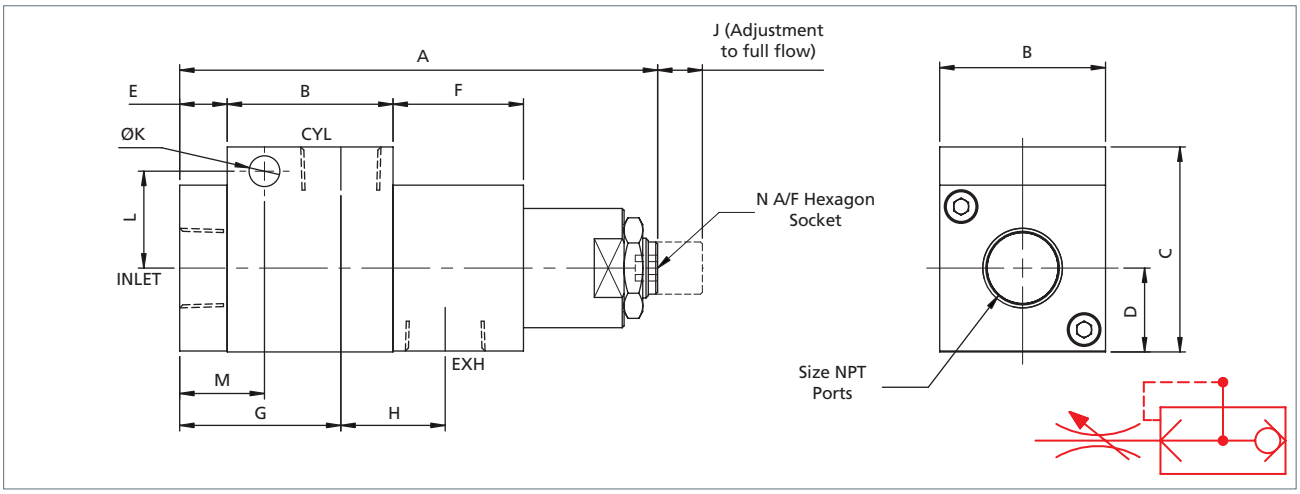

Ordering Information

Standard Product Code with by-pass	Low Temperature Version with by-pass	Size	A	B	C	D	E	F	G	H	J	K	L	M	N
2QEBSN122	2QEBSE122	¼"	90	31.75	38	16	10	26	32	19.75	6	-	-	-	5
3QEBSN122	3QEBSE122	⅜"	101	35	42	17.5	12.5	31	35.5	25	6	-	-	-	5
4QEBSN122	4QEBSE122	½"	128	44.5	55	22.5	12.75	35	43.3	28	12	8.25	26	22.75	6
6QEBSN122	6QEBSE122	¾"	145	50.8	60	25.4	14.5	41.5	48	35.3	10	8.5	27	24.5	6
8QEBSN122	8QEBSE122	1"	210	76.2	91	38.1	15	57	67.2	47	25	11	43	41	12

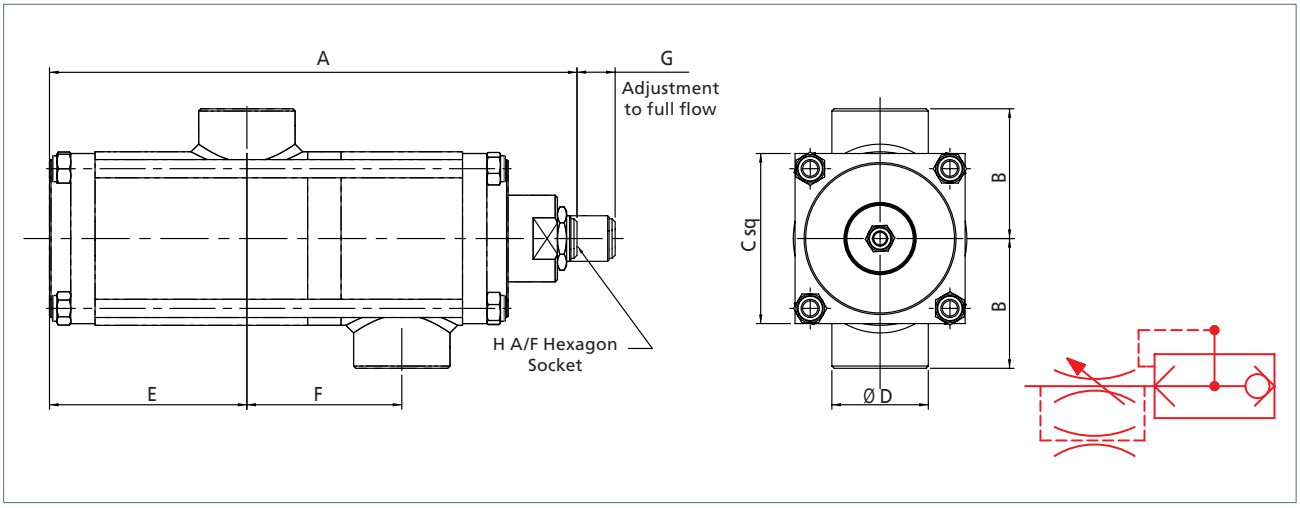

Ordering Information

Standard Product Code	Low Temperature Version	Size	A	B	C	D	E	F	G	H
7QEBSN122A	7QEBSE122A	1½"	347.5	85.5	114	76	130	102	25	12
9QEBSN122A	9QEBSE122A	2"	347.5	85.5	114	76	130	102	25	12

316L stainless steel shuttle valves for three way "OR" function.

Features and Benefits

- Specifically designed for severe environments
- Low temperature option available
- 316L stainless steel
- 5 sizes available

Media and Ambient Temperature Range

- Standard temperature
  -20 to +70 °C (-4 to +158 °F)
- Low temperature version
  -50 to +80 °C (-58 to +176 °F)

Note: When product is ordered as /ATEX ambient temperature is limited to +40 °C (+104 °F) Ex II 2G c T6.

Working Pressure

- 12 bar (174 psi)

Operating Media

- Gases - filtered lubricated or non-lubricated
- Air, inert gas, sweet (natural) gases
- Sour gas option available
- Liquids - Low pressure hydraulic, mineral oil or water

Note: To prevent freezing of the condensate within the product, the media dew point must be at least 10 °C below the lowest ambient temperature the product will be exposed to.

Maximum Flow

At 6 bar, 1 bar pressure drop:

Shuttle valve

- ¼" - 1350 l/min (45 SCFM)
- ⅜" - 1830 l/min (65 SCFM)
- ½" - 3550 l/min (126 SCFM)
- ¾" - 5500 l/min (194 SCFM)
- 1" - 9000 l/min (319 SCFM)

Construction Materials

- Body: 316L stainless steel
- Internals: 316L stainless steel
- Springs: 316 stainless steel
- Seals: Nitrile (EPDM[1] on low temperature option)

[1] The use of lubrication upstream of the product is not recommended for low temperature applications.

Standard Product Code	Low Temperature Version	Size	CV	Weight (kg)
2SHVSN122	2SHVSE122	¼"	1.3	0.16
3SHVSN122	3SHVSE122	⅜"	1.9	0.19
4SHVSN122A	4SHVSE122A	½"	3.7	0.34
6SHVSN122	6SHVSE122	¾"	9.0	0.94
8SHVSN122	8SHVSE122	1"	15	1.41

Certification Options Available

CE ATEX

¼" to ½" Shuttle valve

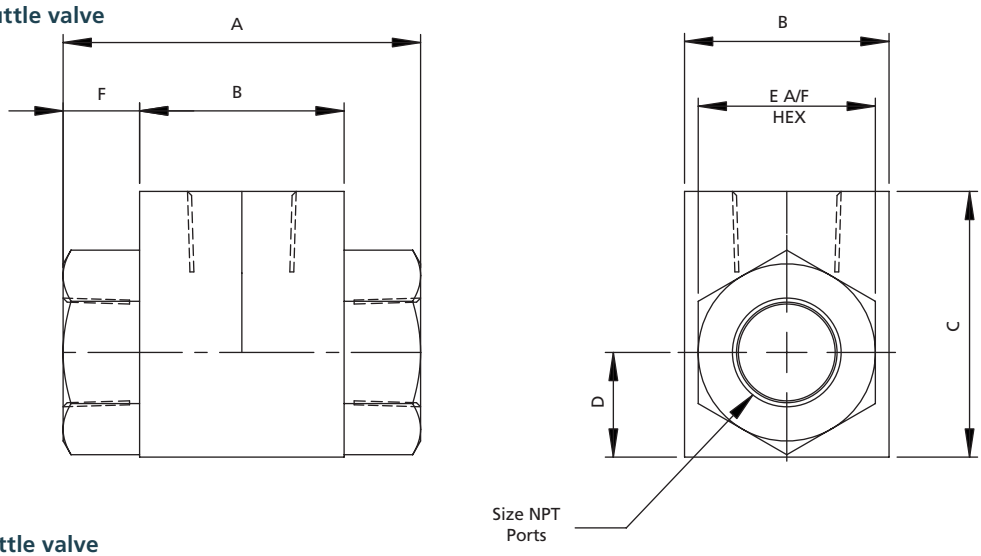

¾" to 1" Shuttle valve

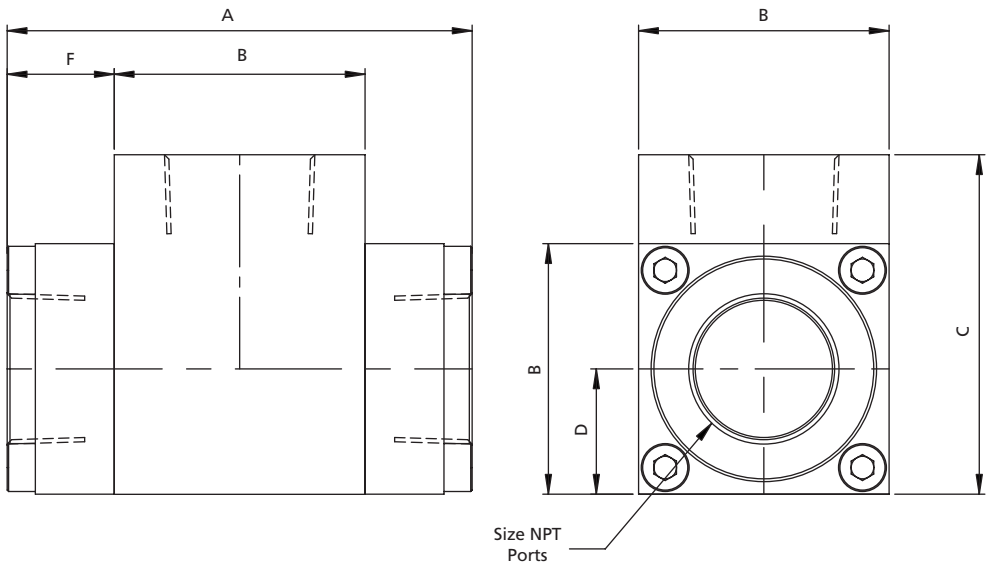

Ordering Information

Product Code	Low Temperature Version	Size	A	B	C	D	E	F
2SHVSN122	2SHVSE122	¼"	44.5	25.4	33	13	22	9.5
3SHVSN122	3SHVSE122	⅜"	54	25.4	38	13	22	14.3
4SHVSN122A	4SHVSE122A	½"	63.8	31.8	48	16	28	16
6SHVSN122	6SHVSE122	¾"	82.5	44.5	60	22.2	-	19
8SHVSN122	8SHVSE122	1"	100	50.8	70	25.4	-	24.6

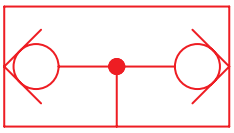

316L stainless steel thermal fuses for fire release.
Available in a range of temperature settings.

Features and Benefits

- Specifically designed for severe environments
- 316L stainless steel
- For fire release

Operating Temperatures

- -20 to +70 °C (-4 to +158 °F)
- -20 to +96 °C (-4 to +205 °F)
- -20 to +102 °C (-4 to +216 °F)
- -20 to +124 °C (-4 to +255 °F)
- -20 to +137 °C (-4 to +279 °F)
- -20 to +200 °C (-4 to +392 °F)

Working Pressure

- 20 bar (290 psi)

Ports NPT

- ½"

Operating Media

- Gases - filtered lubricated or non-lubricated
- Air, inert gas, sweet (natural) gases

Note: To prevent freezing of the condensate within the product, the media dew point must be at least 10 °C below the lowest ambient temperature the product will be exposed to.

Maximum Flow

At 6 bar, 1 bar differential:

Supply to outlet

- ½" - 5800 l/min (205 SCFM)

Construction Materials

- Body: 316L stainless steel
- Thermal plug: Low melting point alloy (bismuth-based)

Product Code	Temperature (°C)	Size	CV	Weight (kg)
4THFSN102070	70	½"	5.8	0.15
4THFSN102096	96			
4THFSN102102	102			
4THFSN102124	124			
4THFSN102137	137			
4THFSN102200	200			

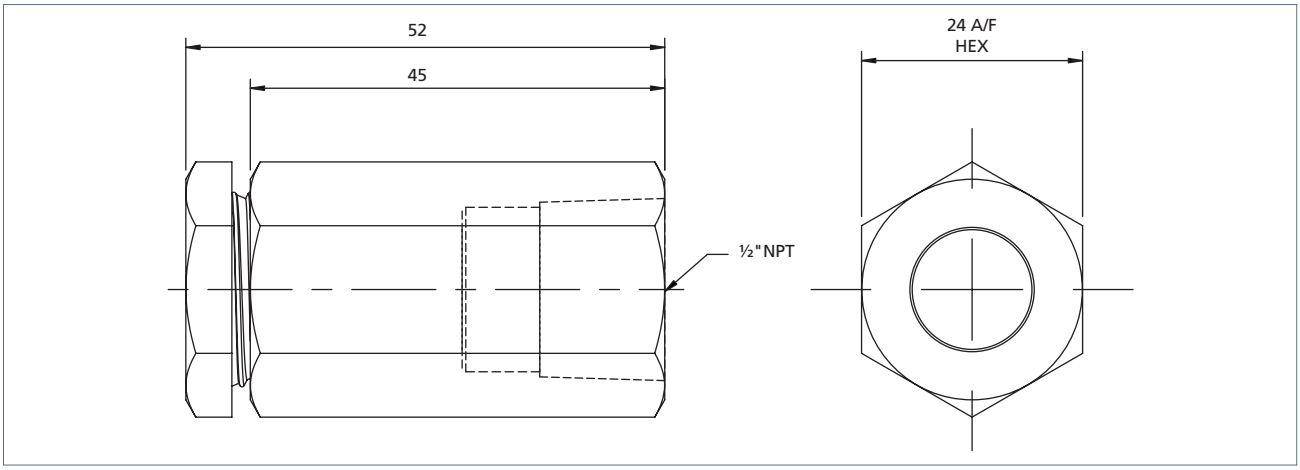

Compact 316L stainless steel panel mounted visual red/green indicator.

Features and Benefits

- Specifically designed for severe environments
- 316L stainless steel
- Can be panel mounted

Media and Ambient Temperature Range

- -20 to +65 °C (-4 to +149 °F)

Note: When product is ordered as /ATEX ambient temperature is limited to +40 °C (+104 °F) Ex II 2G c T6.

Working Pressure

- 1 to 12 bar (14.5 to 174 psi)

Ports NPT (BSP option available)

- ⅛" NPT

Operating Media

- Gases - filtered lubricated or non-lubricated
- Air, inert gas, sweet (natural) gases

Note: To prevent freezing of the condensate within the product, the media dew point must be at least 10 °C below the lowest ambient temperature the product will be exposed to.

Construction Materials

- Body: 316L stainless steel
- Springs: 316 stainless steel
- Seals: Nitrile
- Visual indicator piston: acetal
- Visual indicator assembly: acetal with acrylic lens

Product Code	Ports	Weight (kg)
1VISSN122G	⅛" NPT	0.1
1VISSN121G	⅛" BSP	

If ATEX certification is required suffix product code with '/ATEX'.

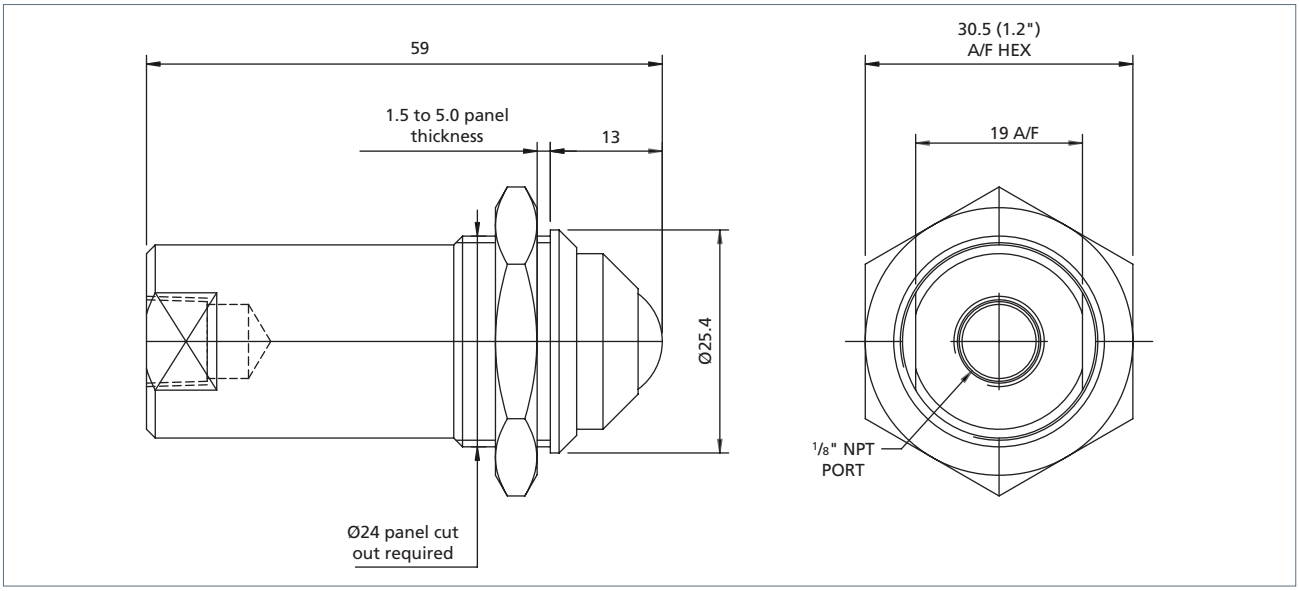

Certification Options Available

CE ATEX

316L stainless steel non-return breather to prevent ingress into exhaust and vent ports.

Features and Benefits

- Specifically designed for severe environments
- 316L stainless steel

Media and Ambient Temperature Range

- -20 to +70 °C (-4 to +158 °F)

Working Pressure

- 12 bar (174 psi)

Ports NPT (BSP option available)

- ¼″ to ½″

Operating Media

- Gases - filtered lubricated or non-lubricated
- Air, inert gas, sweet (natural) gases

Note: To prevent freezing of the condensate within the product, the media dew point must be at least 10 °C below the lowest ambient temperature the product will be exposed to.

Maximum Flow

At 6 bar, 1 bar differential:

- ¼″ - 646 l/min (23 SCFM)
- ⅜″ - 1300 l/min (45 SCFM)
- ½″ - 1550 l/min (54 SCFM)

Construction Materials

- 316L stainless steel
- Non-return sleeve: silicon

Product Code	Size	CV	Weight (kg)
2NRBSN122	¼″	0.65	0.02
3NRBSN122	⅜″	1.3	0.06
4NRBSN122	½″	1.6	0.063

Ordering Information

Product Code	Size	A	B	C
2NRBSN122	¼″	34	17	17
3NRBSN122	⅜″	40	23.4	21
4NRBSN122	½″	45	23.4	21

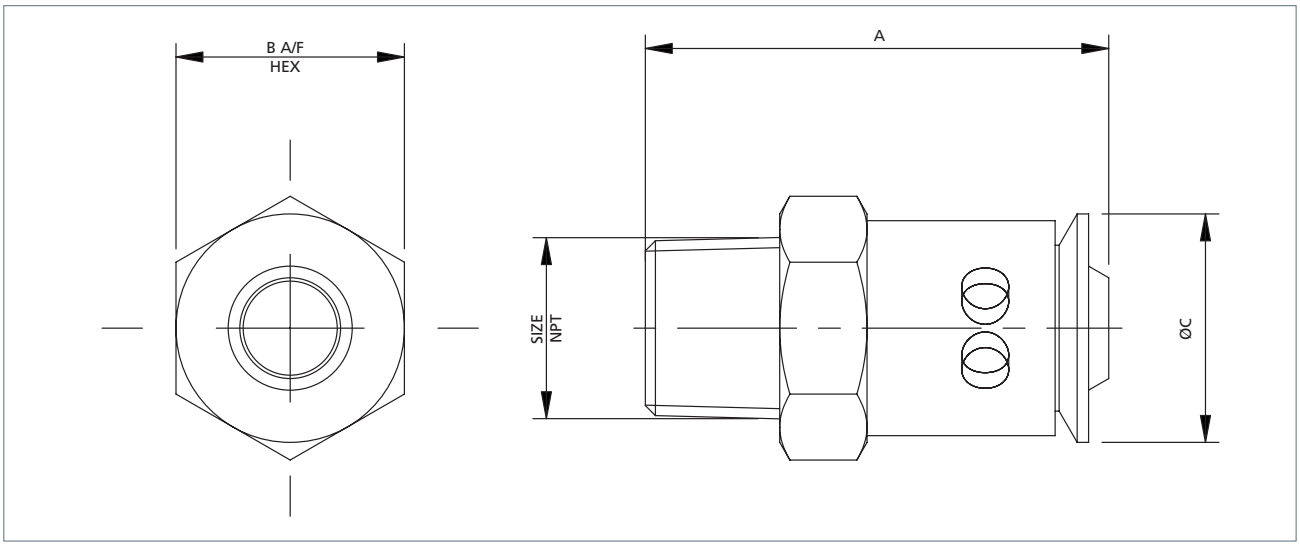

316 stainless steel sintered element silencers used to protect ports open to the atmosphere.

Features and Benefits

- Specifically designed for severe environments

Media and Ambient Temperature Range

- -20 to +70 °C (-4 to +158 °F)

Working Pressure

- 12 bar (174 psi)

Ports NPT (BSP option available)

- ⅛" to 1"

Operating Media

- Gases - filtered lubricated or non-lubricated
- Air, inert gas, sweet (natural) gases

Note: To prevent freezing of the condensate within the product, the media dew point must be at least 10 °C below the lowest ambient temperature the product will be exposed to.

Maximum Flow

At 6 bar, 1 bar differential:

- ⅛" - 1200 l/min (42 SCFM)
- ¼" - 1550 l/min (55 SCFM)
- ⅜" - 1940 l/min (68 SCFM)
- ½" - 3410 l/min (123 SCFM)
- ¾" - 5500 l/min (194 SCFM)
- 1" - 5700 l/min (201 SCFM)

Construction Materials

- Body: stainless steel
- Porous element: 316 stainless steel

Product Code	Size	CV	A	B	Weight (kg)
1BRESN102	1/8"	1.3	31	14	0.015
2BRESN102	¼"	1.7	38	17	0.02
3BRESN102	⅜"	2.0	44	22	0.032
4BRESN102	½"	3.7	55	24	0.05
6BRESN102	¾"	5.8	70	32	0.12
8BRESN102	1"	6.0	75	36	0.15

Note: For breathers that are full stainless steel 316, add 'SS' to product code. Example: 2BRESN102SS.

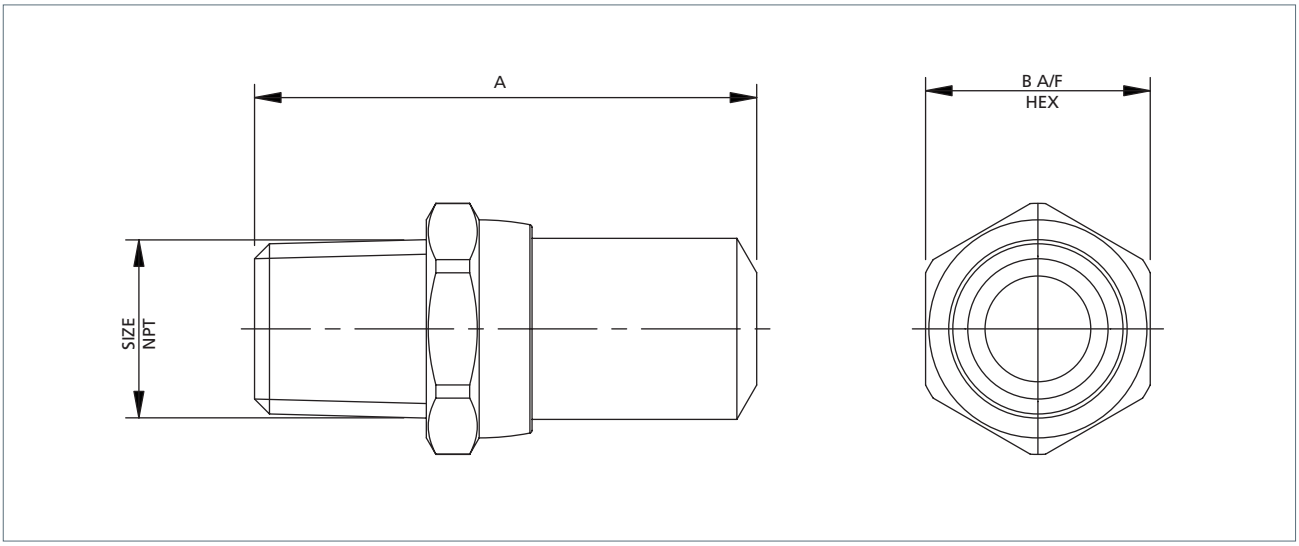

316L stainless steel sintered elements used to protect vent ports open to the atmosphere.

Features and Benefits

- Specifically designed for severe environments
- 316L stainless steel

Media and Ambient Temperature Range

- -20 to +70 °C (-4 to +158 °F)

Working Pressure

- 12 bar (174 psi)

Ports NPT

- ⅛″ to ¼″

Operating Media

- Gases - filtered lubricated or non-lubricated
- Air, inert gas, sweet (natural) gases

Note: To prevent freezing of the condensate within the product, the media dew point must be at least 10 °C below the lowest ambient temperature the product will be exposed to.

Construction Materials

- Body: 316L stainless steel

Product Code	Size	CV	Weight (kg)
1VPBSN122	⅛″	1.3	0.015
3NRBSN122	¼″	1.7	0.02

Ordering Information

Product Code	Size	A	B
2NRBSN122	⅛″	6	5
3NRBSN122	¼″	9	6

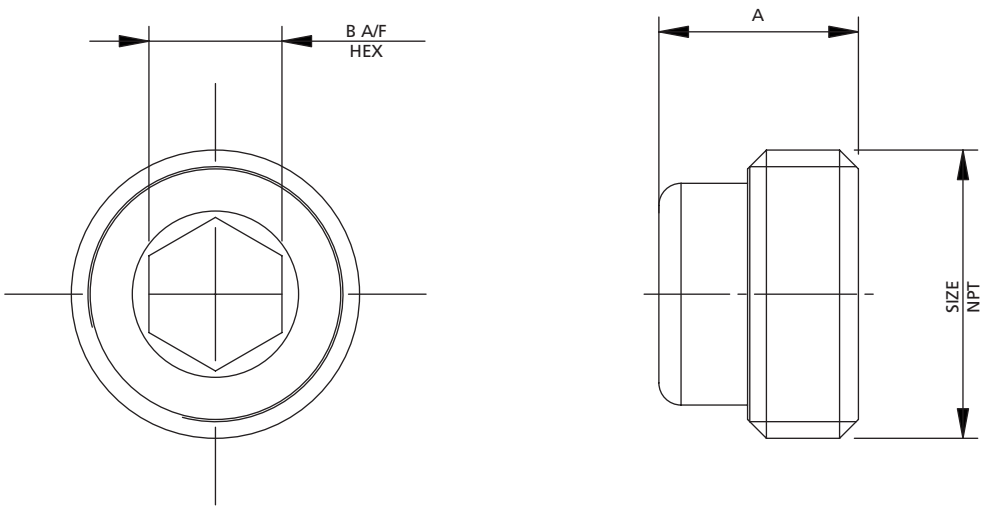

Authorized Distributor
MONILEK OILFIELD

MONILEK
OILFIELD

E: sales@monilek.com
W: www.monilekgroup.com

MIDLAND
FLOW LIMITED

Midland Flow is a leading manufacturer of pneumatic and hydraulic instrumentation, supporting the oil and gas, chemical processing, rail, hydrogen, water and power industries.

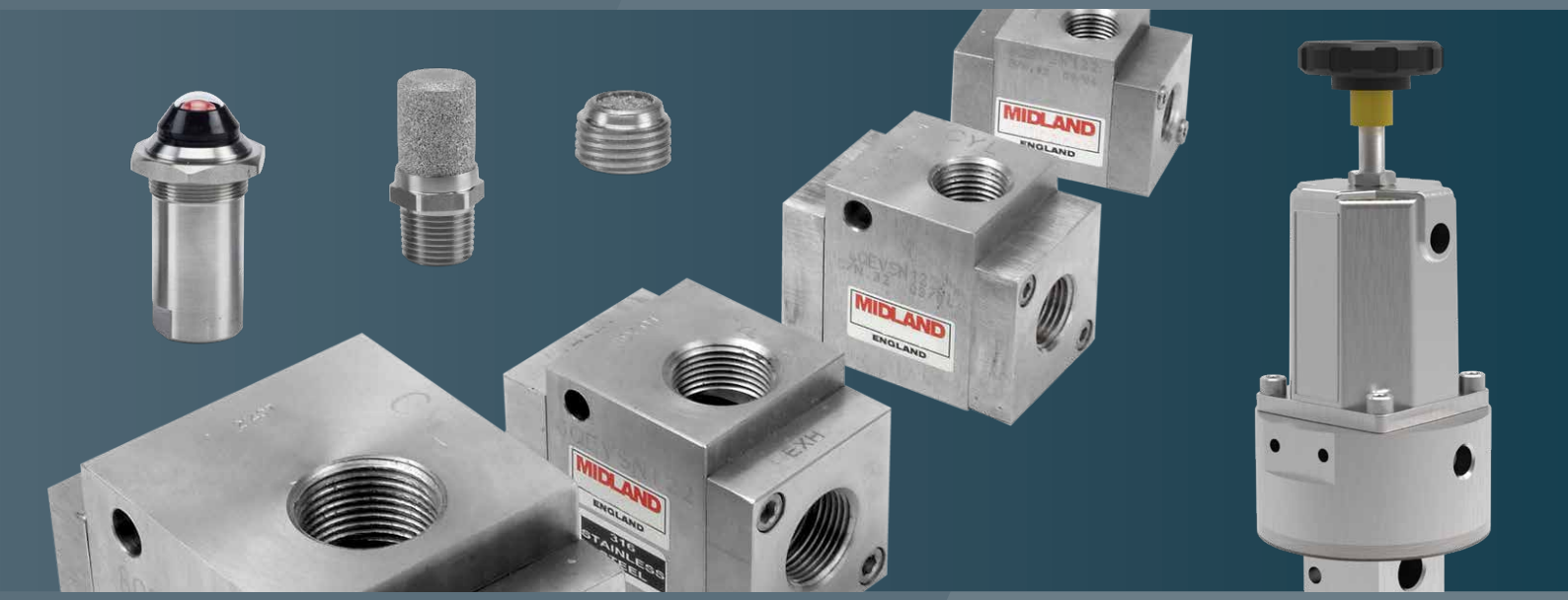

Midland Flow Ltd.
Patrick Gregory Road
Wolverhampton
WV11 3DZ, UK

+44 (0)1902 305 678

sales@midlandflow.com

MFP-005-00-1